ENGINE COOLANT TEMPERATURE (ECT) SWITCH

AC1HE-03

INSPECTION

1. DRAIN ENGINE COOLANT FROM RADIATOR

HINT:

It is not necessary to drain out all the coolant.

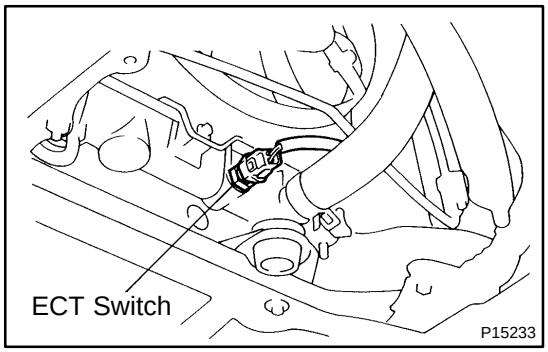

2. REMOVE ECT SWITCH

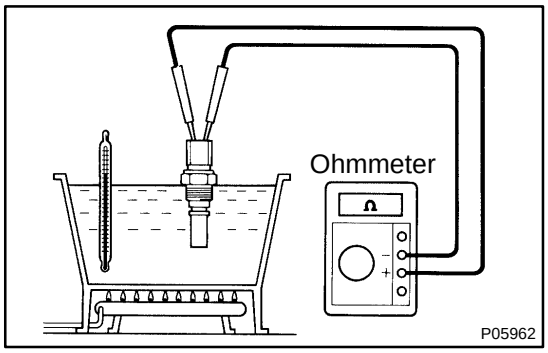

3. INSPECT SWITCH CONTINUITY

(a) Using an ohmmeter, check that no continuity exists between the terminals when the coolant temperature is above 90 ˚C (194 ˚F).

(b) Using an ohmmeter, check that continuity exists between the terminals when the coolant temperature is below 83 ˚C (181 ˚F).

If no continuity exists, replace the switch.

4. INSTALL ECT SWITCH

5. REFILL ENGINE COOLANT

SF0VS-02

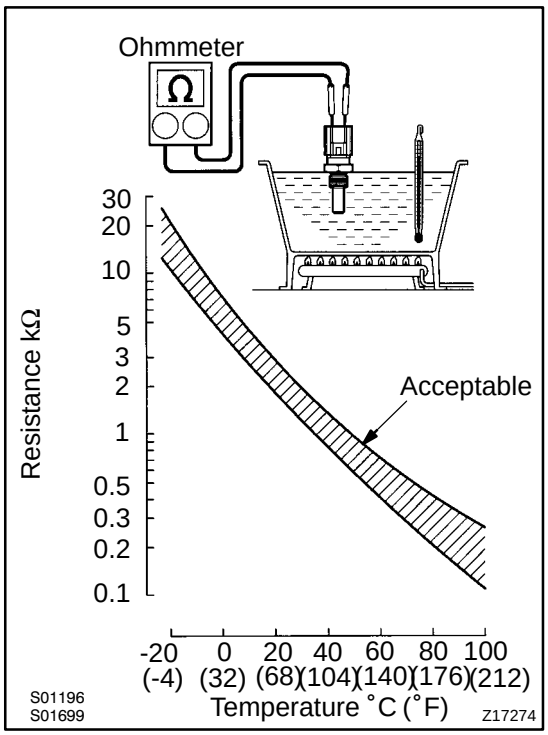

INSPECTION

1. DRAIN ENGINE COOLANT

2. REMOVE ECT SENSOR

3. INSPECT ECT SENSOR

Using an ohmmeter, measure the resistance between the terminals.

Resistance: Refer to the graph

If the resistance is not as specified, replace the ECT sensor.

4. REINSTALL ECT SENSOR

5. REFILL WITH ENGINE COOLANT

EVAPORATIVE EMISSION (EVAP) CONTROL SYSTEM

EC0GR-02

COMPONENTS

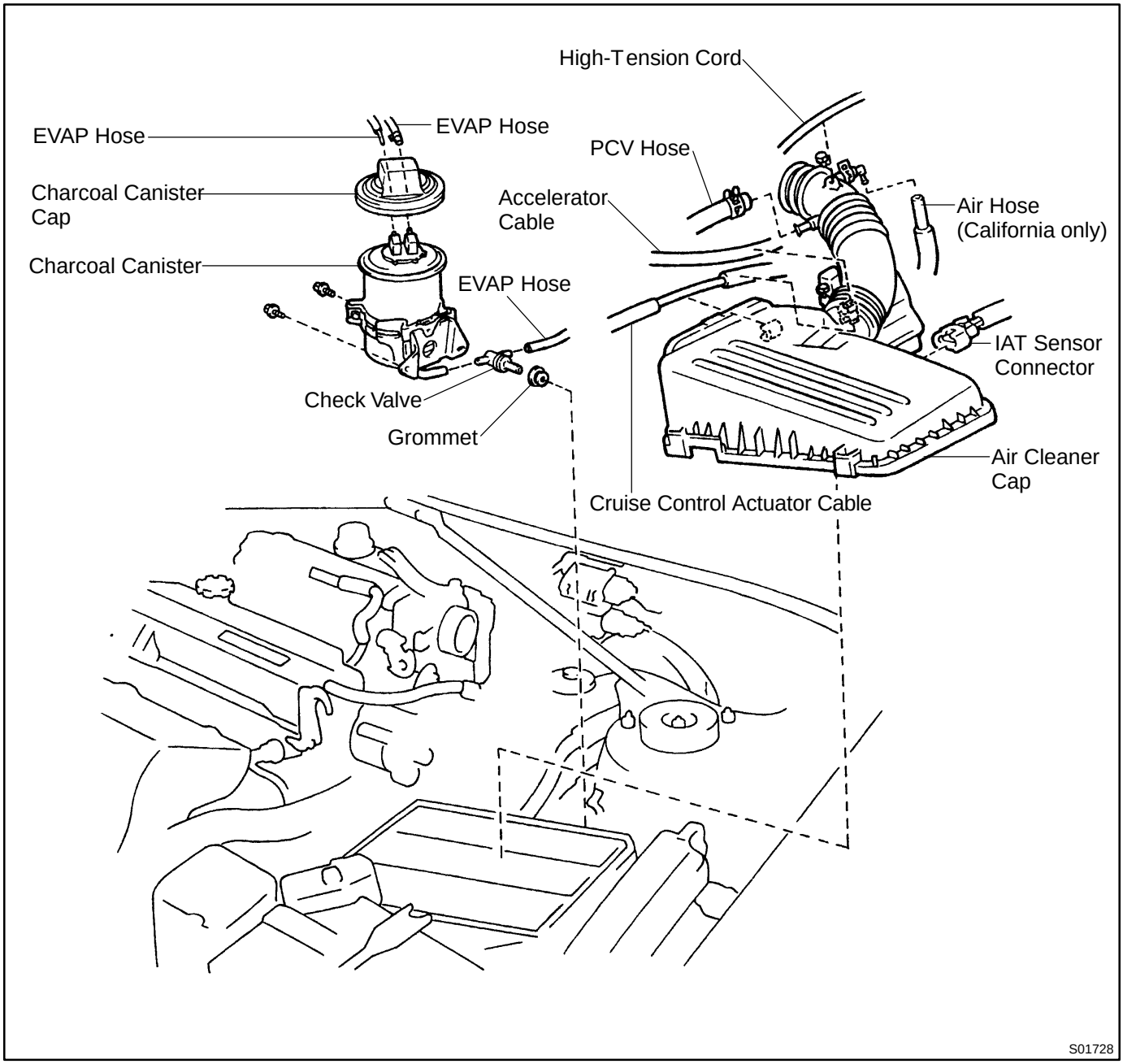

EXHAUST GAS RECIRCULATION (EGR) SYSTEM

EC076-04

COMPONENTS

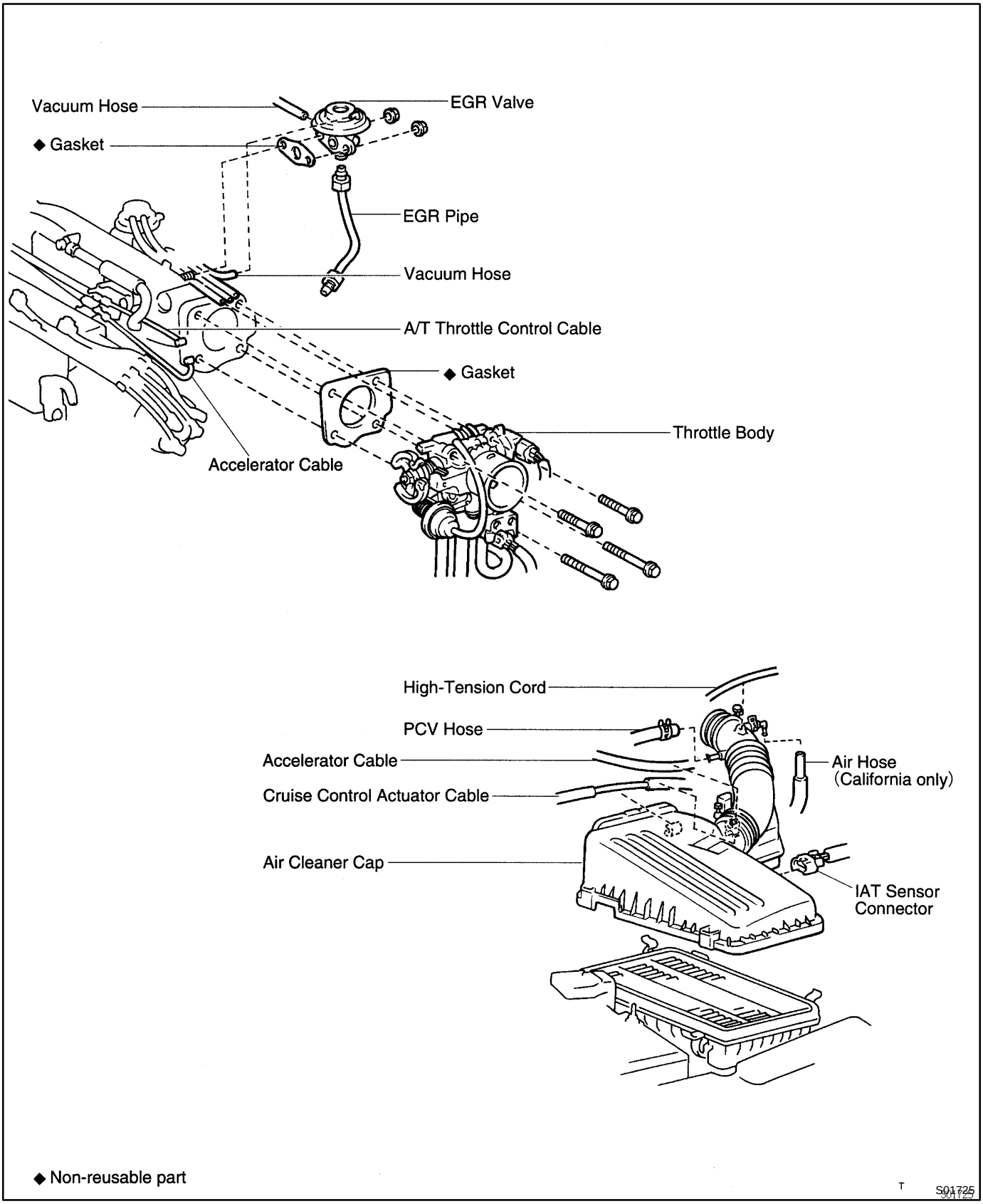

EC077-03

INSPECTION

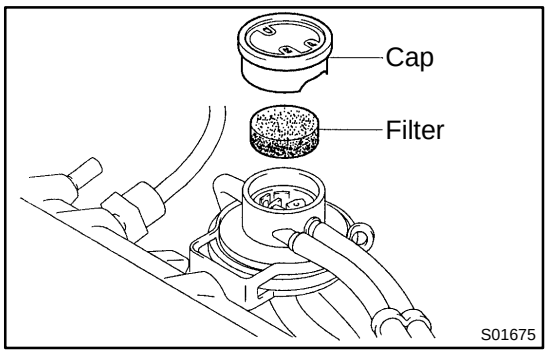

1. INSPECT AND CLEAN FILTER IN EGR VACUUM MODULATOR

(a) Remove the cap and filter.
(b) Check the filter for contamination or damage.
(c) Using compressed air, clean the filter.
(d) Reinstall the filter and cap.

HINT:
Install the filter with the coarser surface facing the atmospheric side (outward).

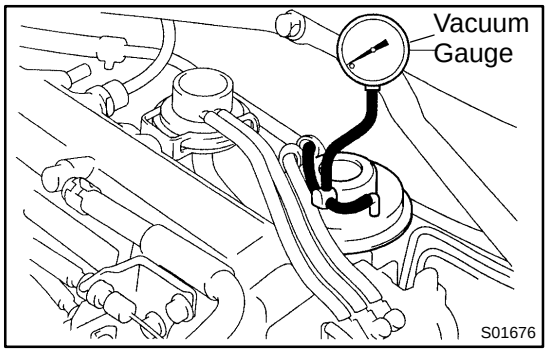

2. INSTALL VACUUM GAUGE

Using a 3-way connector, connect a vacuum gauge to the hose between the EGR valve and VSV.

3. INSPECT SEATING OF EGR VALVE

Start the engine and check that the engine starts and runs at idle.

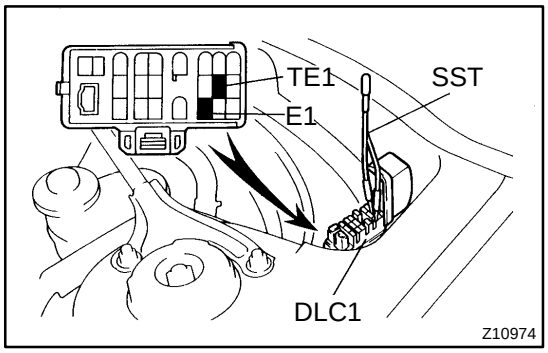

4. CONNECT TERMINALS TE1 AND E1 OF DLC1

Using SST, connect terminals TE1 and E1 of the DLC1.
SST 09843-18020

5. INSPECT VSV OPERATION WITH COLD ENGINE

(a) The engine coolant temperature should be below 55˚C (131˚F).
(b) Check that the vacuum gauge indicates zero at 2,500 rpm.

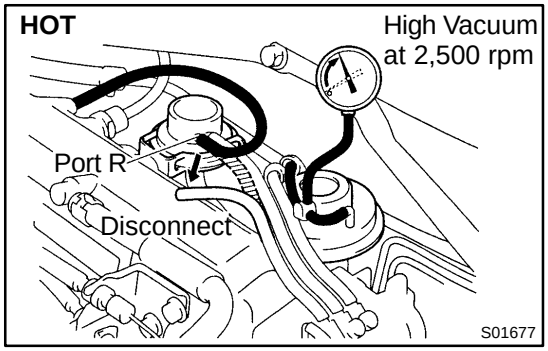

6. INSPECT OPERATION OF VSV AND EGR VACUUM MODULATOR WITH HOT ENGINE

(a) Warm up the engine to above 60˚C (140˚F).
(b) Check that the vacuum gauge indicates low vacuum at 2,500 rpm.
(c) Disconnect the vacuum hose port R of the EGR vacuum modulator and connect port R directly to the intake manifold with another hose.
(d) Check that the vacuum gauge indicates high vacuum at 2,500 rpm.

HINT:
As a large amount of exhaust gas enters, the engine will misfire slightly.

7. REMOVE VACUUM GAUGE

Remove the vacuum gauge, and reconnect the vacuum hoses to the proper locations.

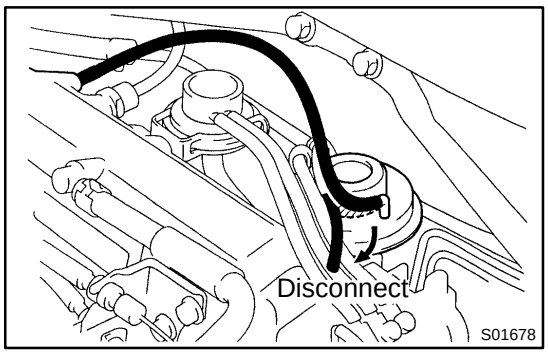

8. INSPECT EGR VALVE

(a) Apply vacuum directly to the EGR valve with the engine idling.

(b) Check that the engine runs rough or dies.

(c) Reconnect the vacuum hoses to the proper locations.

HINT:

As exhaust gas is increasingly recirculated, the engine will start to misfire.

9. REMOVE SST FROM DLC1

SST 09843-18020

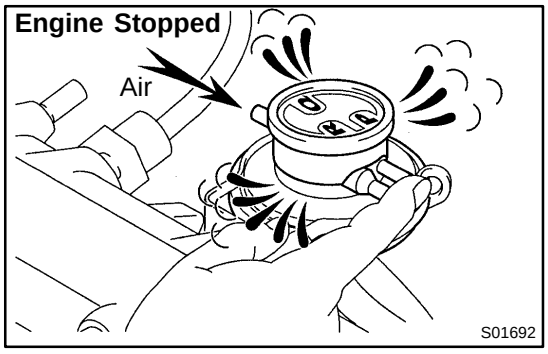

10. INSPECT EGR VACUUM MODULATOR OPERATION

(a) Disconnect the vacuum hoses from ports P, Q and R of the EGR vacuum modulator.

(b) Block ports P and R with your finger.

(c) Blow air into port Q, and check that the air passes through to the air filter side freely.

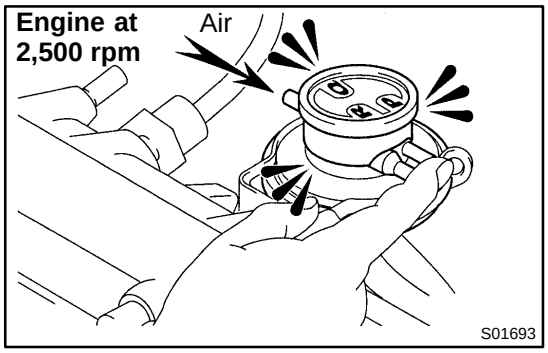

(d) Start the engine, and maintain speed at 2,500 rpm.

(e) Repeat the above test. Check that there is a strong resistance to air flow.

(f) Reconnect the vacuum hoses to the proper locations.

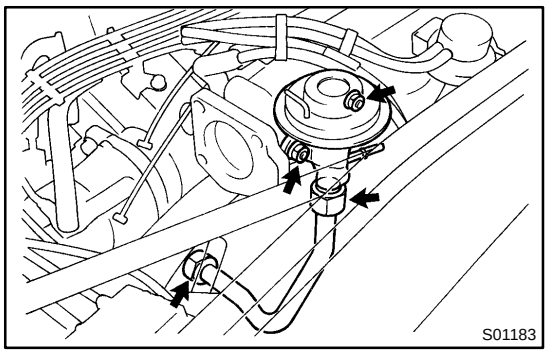

11. DISCONNECT THROTTLE BODY FROM INTAKE MANIFOLD (See page SF-34)

12. REMOVE EGR VALVE

(a) Disconnect these hoses from the EGR valve:

- Vacuum hose (from port E of VSV)
- EGR hose (from vacuum modulator)

(b) Loosen the 2 union nuts on the EGR pipe.

(c) Remove the 2 nuts, EGR valve and gasket.

13. INSPECT EGR VALVE

Check for sticking and heavy carbon deposits.

If a problem is found, replace the valve.

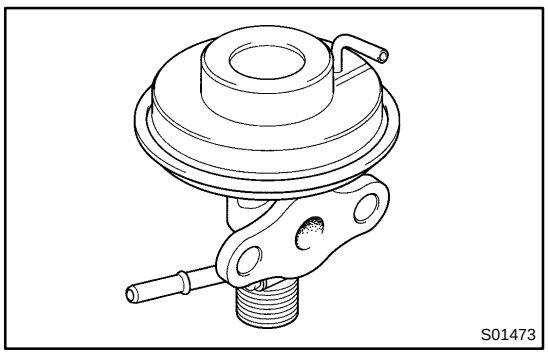

14. REINSTALL EGR VALVE

(a) Install a new gasket and the EGR valve with the 2 nuts.
Torque: 13 N·m (130 kgf·cm, 9 ft·lbf)

(b) Install the EGR pipe with the 2 union nuts.
Torque: 59 N·m (600 kgf·cm, 43 ft·lbf)

(c) Connect these hoses to the EGR valve:
- Vacuum hose (from port E of VSV)
- EGR hose (from vacuum modulator)

15. REINSTALL THROTTLE BODY (See page SF-37)

SF0VI-05

COMPONENTS

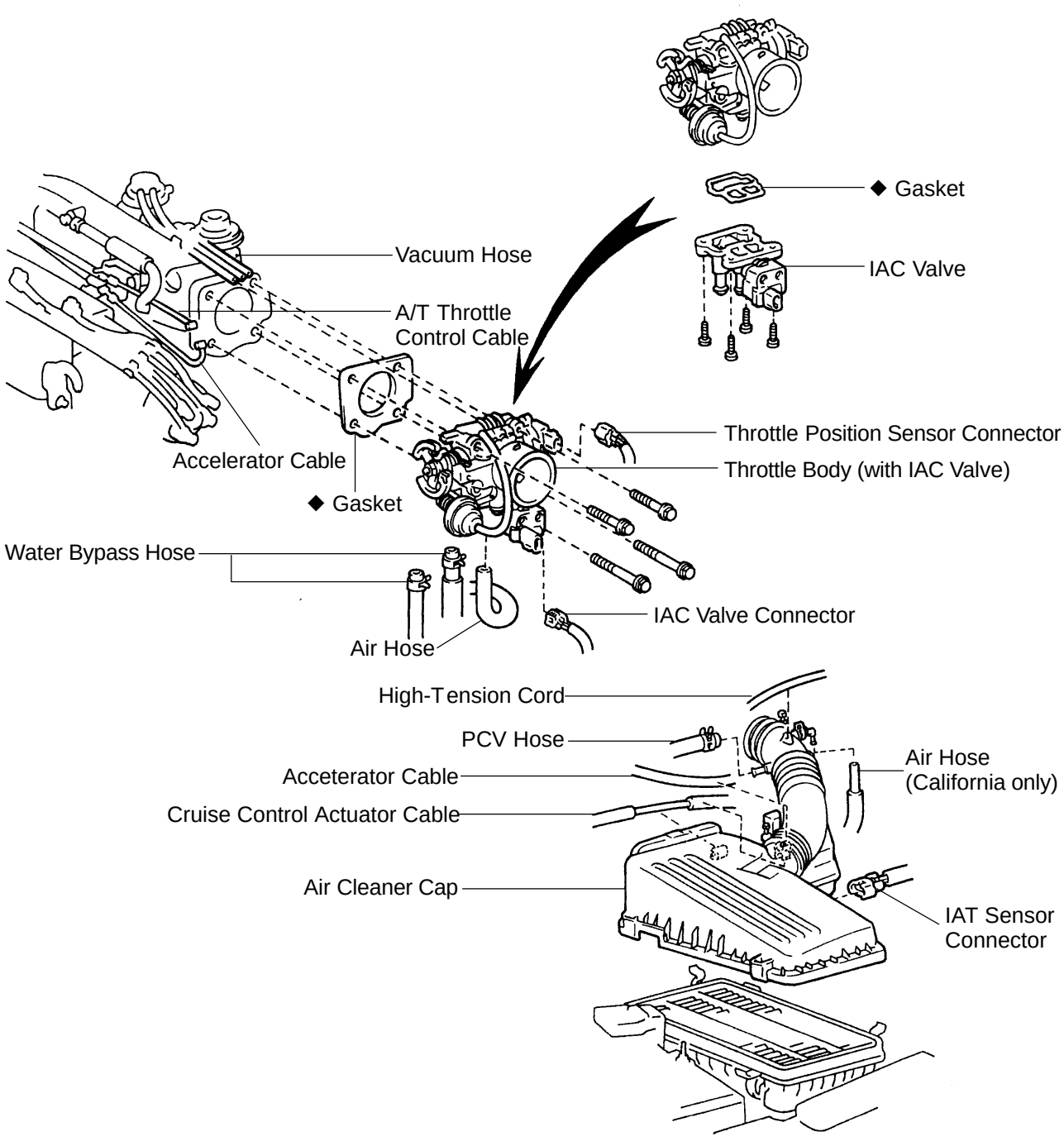

◆ Non-reusable part

S01726

SF0VK-02

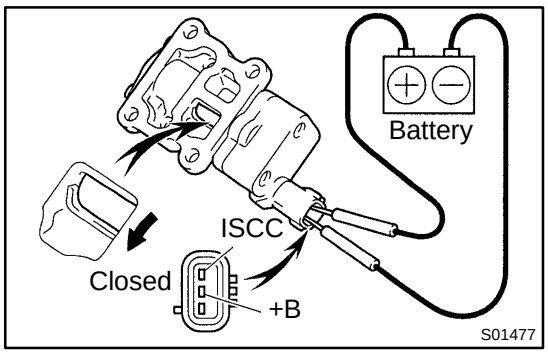

INSPECTION

INSPECT IAC VALVE OPERATION

(a) Connect the positive (+) lead from the battery to terminal +B and negative (-) lead to terminal ISCC, and check that the valve is closed.

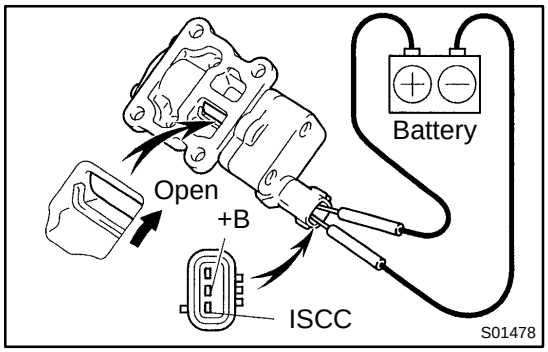

(b) Connect the positive (+) lead from the battery to terminal +B and negative (-) lead to terminal ISCO, and check that the valve is open.

If operation is not as specified, replace the IAC valve.

SF0VL-02

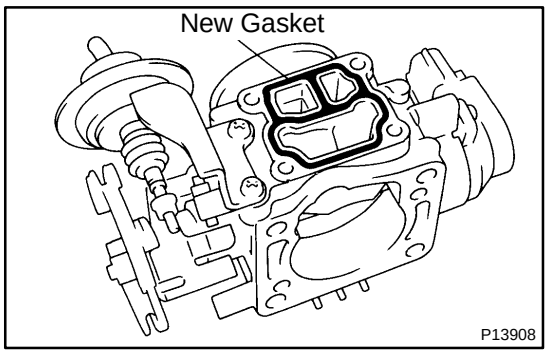

INSTALLATION

1. INSTALL IAC VALVE

(a) Place a new gasket on the throttle body.

(b) Install the IAC valve with the 4 screws.

2. INSTALL THROTTLE BODY

(See page SF-37)

IDLE AIR CONTROL (IAC) VALVE

SF0VH-02

ON-VEHICLE INSPECTION

1. INSPECT IAC VALVE OPERATION

(a) Initial conditions:
- Engine at normal operating temperature
- Idle speed set correctly
- Transmission in neutral position

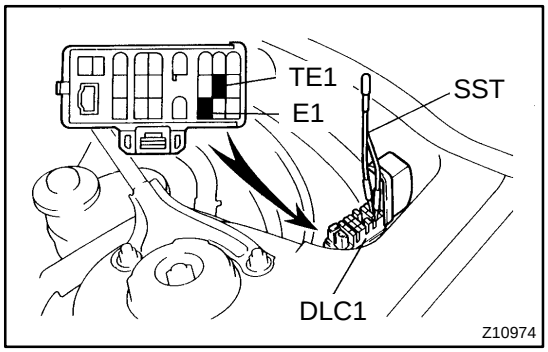

(b) Using SST, connect terminals TE1 and E1 of the DLC1.
SST 09843-18020

(c) After engine rpm is kept at 900 - 1,300 rpm for 5 seconds, check that it returns to idle speed.

If the rpm operation is not as specified, check the IAC valve, wiring and ECM.

(d) Remove the SST from the DLC1.
SST 09843-18020

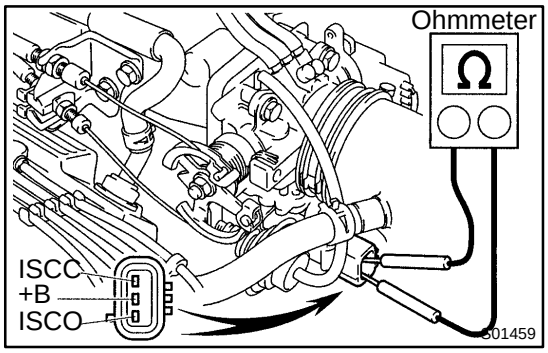

2. INSPECT IAC VALVE RESISTANCE

NOTICE:

"Cold" and "Hot" in these sentences express the temperature of the coils themselves. "Cold" is from -10˚C (14˚F) to 50˚C (122˚F) and "Hot" is from 50˚C (122˚F) to 100˚C (212˚F).

(a) Disconnect the IAC valve connector.

(b) Using an ohmmeter, measure the resistance between terminal +B and other terminals (ISCC, ISCO).

Resistance:

Cold	17.0 - 24.5 Ω
Hot	21.5 - 28.5 Ω

If resistance is not as specified, replace the IAC valve.

(c) Reconnect the IAC valve connector.

SF0VJ-02

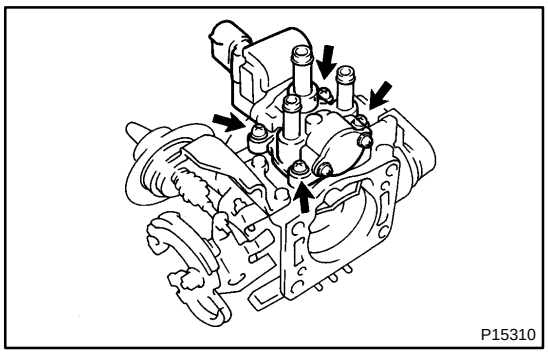

REMOVAL

1. REMOVE THROTTLE BODY
(See page SF-34)

2. REMOVE IAC VALVE

Remove the 4 screws, IAC valve and gasket.

INTAKE AIR TEMPERATURE (IAT) SENSOR

COMPONENTS

SF0VT-02

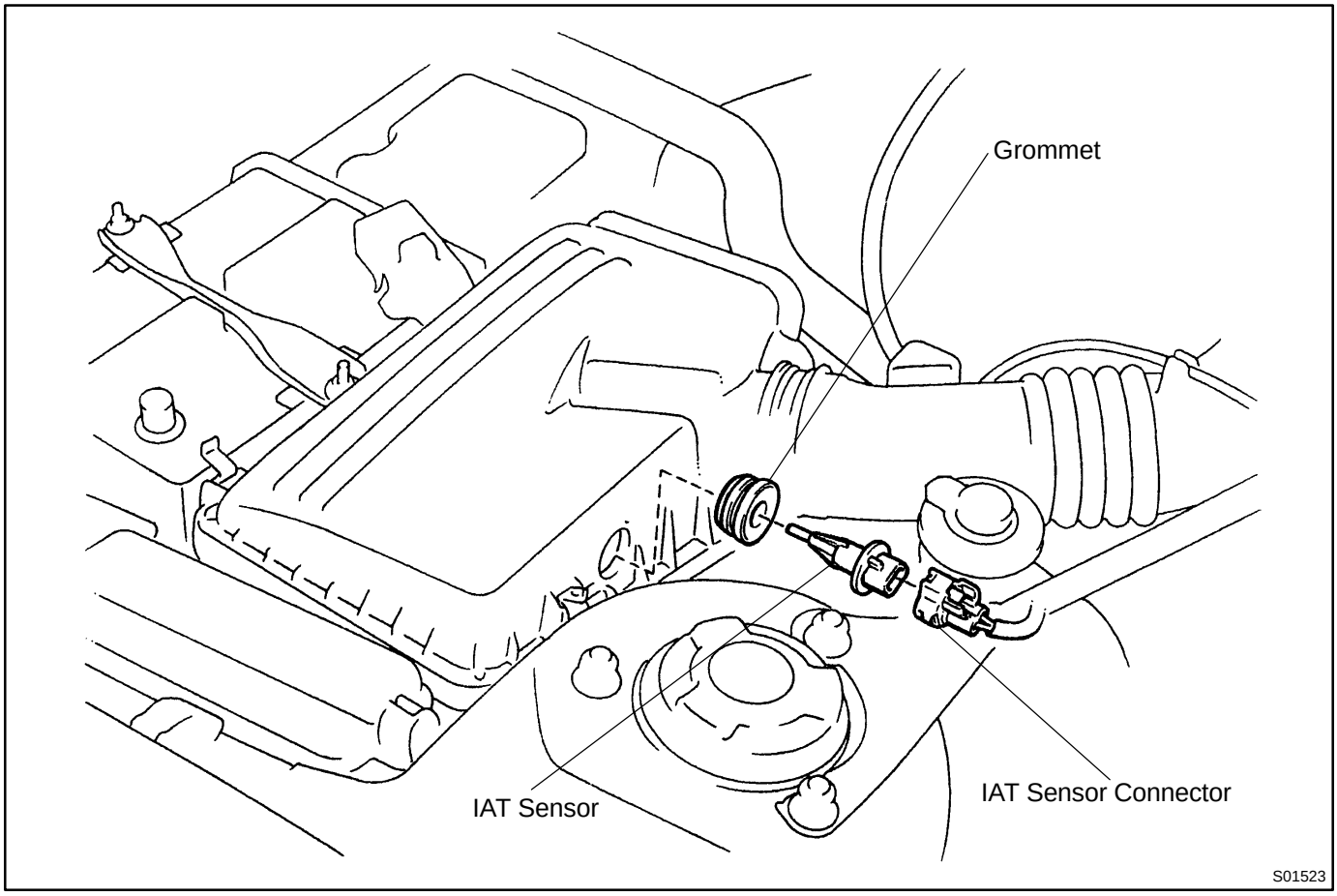

SF0VU-02

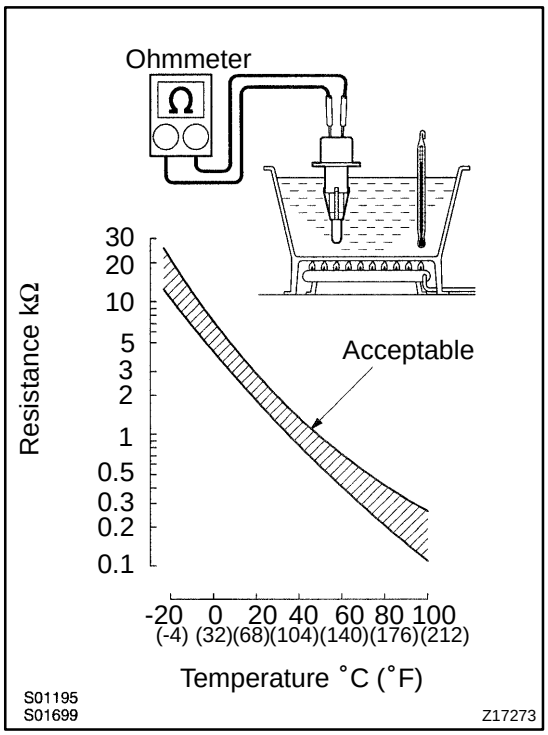

INSPECTION

1. REMOVE IAT SENSOR

2. INSPECT IAT SENSOR

Using an ohmmeter, measure the resistance between the terminals.

Resistance: Refer to the graph

If the resistance is not as specified, replace the sensor.

3. REINSTALL IAT SENSOR

MANIFOLD ABSOLUTE PRESSURE (MAP) SENSOR

SF0VV-02

COMPONENTS

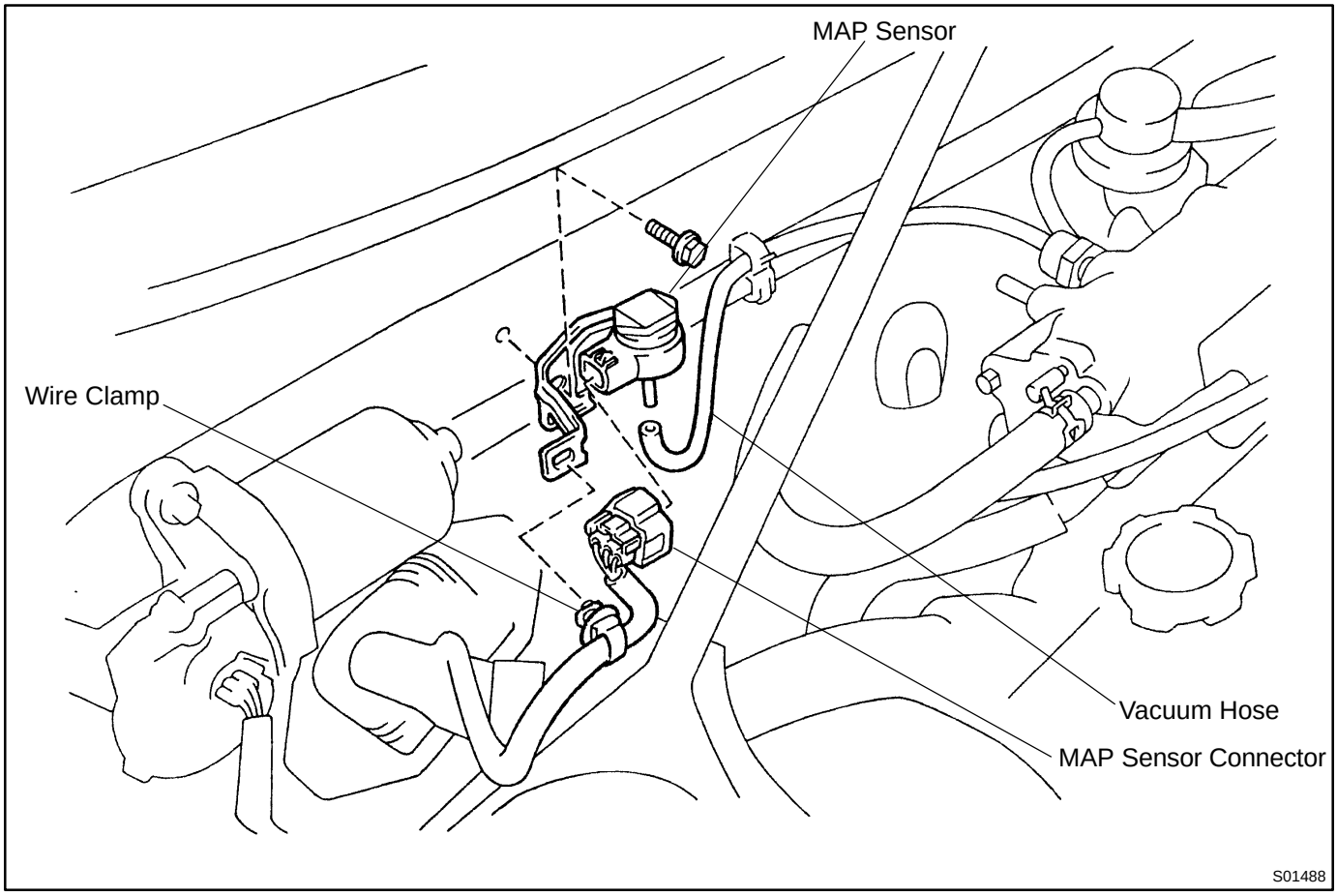

SF0VW-02

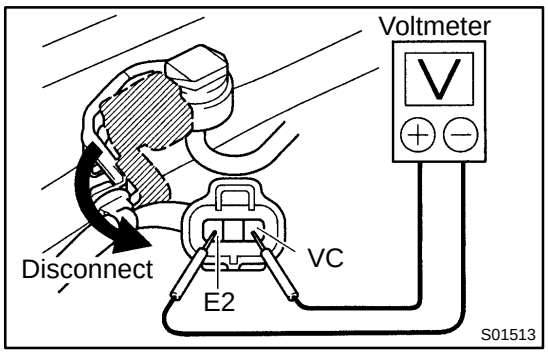

INSPECTION

1. INSPECT POWER SOURCE VOLTAGE OF MAP SENSOR

(a) Disconnect the MAP sensor connector.

(b) Turn the ignition switch ON.

(c) Using a voltmeter, measure the voltage between connector terminals VC and E2 of the wiring harness side.

Voltage: 4.5 - 5.5 V

(d) Turn the ignition switch OFF.

(e) Reconnect the MAP sensor connector.

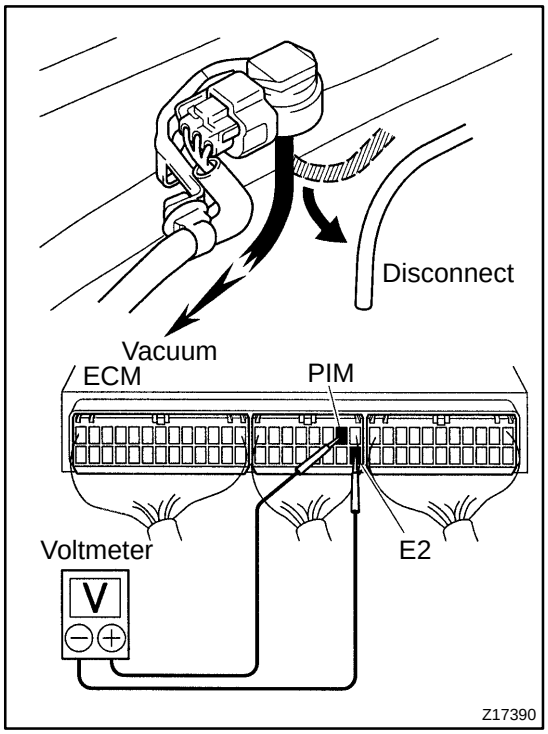

2. INSPECT POWER OUTPUT OF MAP SENSOR

(a) Turn the ignition switch ON.

(b) Disconnect the vacuum hose from the MAP sensor.

(c) Connect a voltmeter to terminals PIM and E2 of the ECM, and measure the output voltage under ambient atmospheric pressure.

(d) Apply vacuum to the MAP sensor in 13.3 kPa (100 mmHg, 3.94 in.Hg) segments to 66.7 kPa (500 mmHg, 19.69 in.Hg).

(e) Measure the voltage drop from step (c) above for each segment.

Voltage drop

Applied Vacuum kPa (mm Hg, in. Hg)	13.3 (100, 3.94)	26.7 (200, 7.87)	40.0 (300, 11.81)	53.5 (400, 15.75)	66.7 (500, 19.69)
Voltage drop V	0.3 - 0.5	0.7 - 0.9	1.1 - 1.3	1.5 - 1.7	1.9 - 2.1

V00494

(f) Reconnect the vacuum hose to the MAP sensor.

SFI SYSTEM

SF1B7-02

PRECAUTION

1. BEFORE WORKING ON FUEL SYSTEM, DISCONNECT NEGATIVE (-) TERMINAL CABLE FROM BATTERY

HINT:

Any diagnostic trouble code retained by the computer will be erased when the negative (-) terminal cable is disconnected. Therefore, if necessary, read the diagnosis before disconnected the negative (-) terminal cable from the battery.

2. DO NOT SMOKE OR WORK NEAR AN OPEN FLAME WHEN WORKING ON THE FUEL SYSTEM

3. KEEP GASOLINE AWAY FROM RUBBER OR LEATHER PARTS

4. MAINTENANCE PRECAUTIONS

(a) In event of engine misfire, these precautions should be taken.
  (1) Check proper connection of battery terminals, etc.
  (2) Handle high-tension cords carefully.
  (3) After repair work, check that the ignition coil terminals and all other ignition system lines are reconnected securely.
  (4) When cleaning the engine compartment, be especially careful to protect the electrical system from water.

(b) Precautions when handling the oxygen sensor.
  (1) Do not allow oxygen sensor to drop or hit against an object.
  (2) Do not allow the sensor to come into contact with water.

5. IF VEHICLE IS EQUIPPED WITH MOBILE RADIO SYSTEM (HAM, CB, ETC.)

If the vehicle is equipped with a mobile communication system, refer to the precaution in the IN section.

6. AIR INDUCTION SYSTEM

(a) Separation of the engine oil dipstick, oil filler cap, PCV hose, etc. may cause the engine to run out of tune.

(b) Disconnection, looseness or cracks in the parts of the air induction system between the throttle body and cylinder head will allow air suction and cause the engine to run out of tune.

7. ELECTRONIC CONTROL SYSTEM

(a) Before removing SFI wiring connectors, terminals, etc., first disconnect the power by either turning the ignition switch OFF or disconnecting the negative (-) terminal cable from the battery.

HINT:
Always check the diagnostic trouble code before disconnecting the negative (-) terminal cable from the battery.

(b) When installing the battery, be especially careful not to incorrectly connect the positive (+) and negative (-) cables.
(c) Do not permit parts to receive a severe impact during removal or installation. Handle all SFI parts carefully, especially the ECM.
(d) Do not be careless during troubleshooting as there are numerous transistor circuits, and even slight terminal contact can cause further troubles.
(e) Do not open the ECM cover.
(f) When inspecting during rainy weather, take care to prevent entry of water. Also, when washing the engine compartment, prevent water from getting on the SFI parts and wiring connectors.
(g) Parts should be replaced as an assembly.
(h) Care is required when pulling out and inserting wiring connectors.
    (1) Release the lock and pull out the connector, pulling on the connectors.
    (2) Fully insert the connector and check that it is locked.

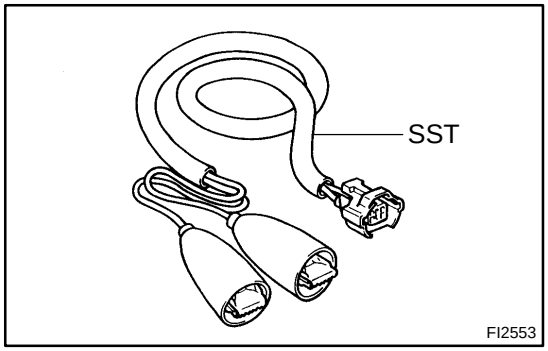

(i) Use SST for inspection or test of the injector or its wiring connector.
SST 09842-30070

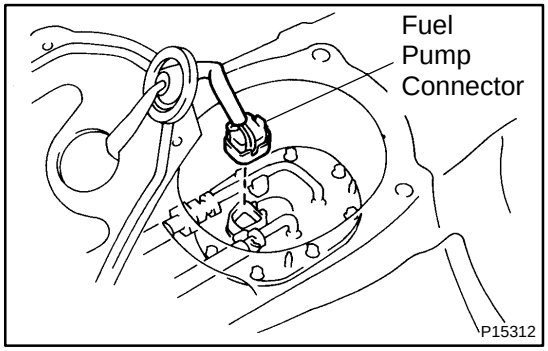

8. FUEL SYSTEM

(a) When disconnecting the high pressure fuel line, a large amount of gasoline will spill out, so observe these procedures:
    (1) Disconnect the fuel pump connector.
    (2) Start the engine. After the engine has stopped on its own, turn the ignition switch OFF.

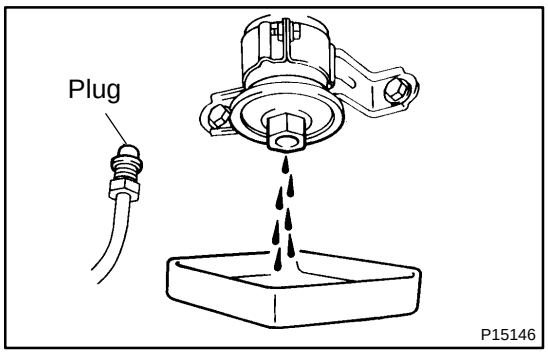

(3) Put a container under the connection.
(4) Slowly loosen the connection.
(5) Disconnect the connection.
(6) Plug the connection with a rubber plug.
(7) Reconnect the fuel pump connector.

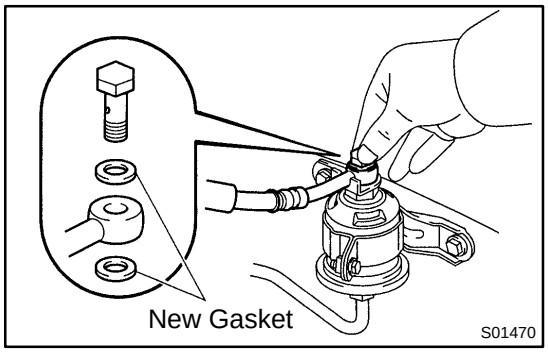

(b) Union Bolt Type:
When connecting the flare nut or union bolt on the high pressure pipe union, observe these procedures:
(1) Always use a new gasket.
(2) Tighten the union bolt by hand.
(3) Tighten the union bolt to the specified torque.
Torque: 29 N·m (300 kgf·cm, 22 ft·lbf)

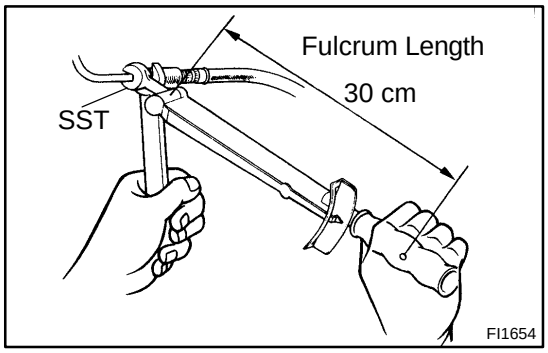

(c) Flare Nut Type:
When connecting the flare nut or union bolt on the high pressure pipe union, observe these procedures:
(1) Apply a light coat of engine oil to the flare nut, and tighten the flare nut by hand.
(2) Using SST, tighten the flare nut to specified torque.
SST 09631-22020

NOTICE:
Do not rotate the fuel pipe, when tightening the flare nut.

Torque:
Fuel pump side: 24 N·m (240 kgf·cm, 14 ft·lbf)
Others: 30 N·m (310 kgf·cm, 22 ft·lbf)

HINT:
Use a torque wrench with a fulcrum length of 30 cm (11.81 in.).

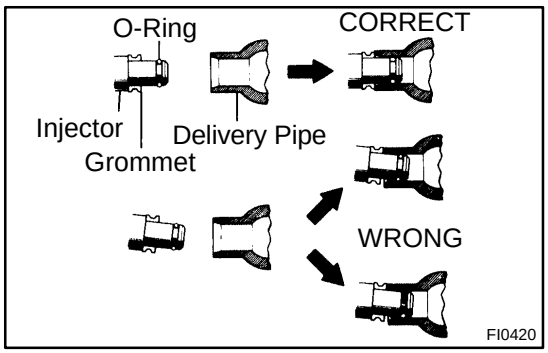

(d) Observe the following precautions when removing and installing the injectors.
(1) Never reuse the O-ring.
(2) When placing a new O-ring on the injector, take care not to damage it in any way.
(3) Coat a new O-ring with spindle oil or gasoline before installing-never use engine, gear or brake oil.

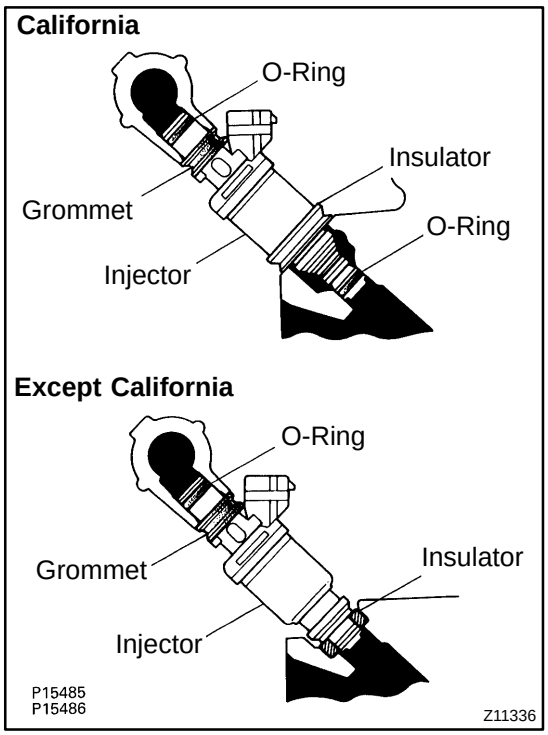

(e) Install the injector to the delivery pipe and cylinder head as shown in the illustration.

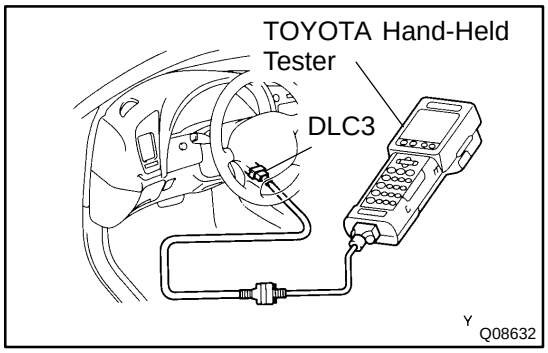

(f) Check that there are no fuel leaks after performing maintenance anywhere on the fuel system.

(1) Connect a TOYOTA hand-held tester to the DLC3.

(2) Turn the ignition switch ON and TOYOTA hand-held tester main switch ON.

NOTICE:

Do not start the engine.

(3) Select the active test mode on the TOYOTA hand-held tester.

(4) Please refer to the TOYOTA hand-held tester operator's manual for further details.

(5) If you have no TOYOTA hand-held tester, connect the positive (+) and negative (-) leads from the battery to the fuel pump connector (See page SF-6).

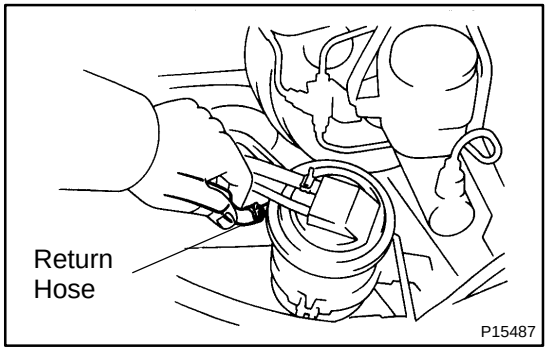

(6) Pinch the fuel return hose.

The pressure in the high pressure line will rise to approx. 400 kPa (4 kgf/cm^2, 57 psi). In this state, check to see that there are no leaks from any part of the fuel system.

NOTICE:

Always pinch the hose. Avoid bending as it may cause the hose to crack.

(7) Turn the ignition switch OFF.
(8) Disconnect the TOYOTA hand-held tester from the DLC3.

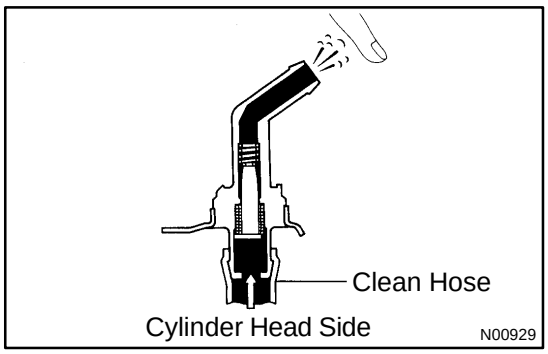

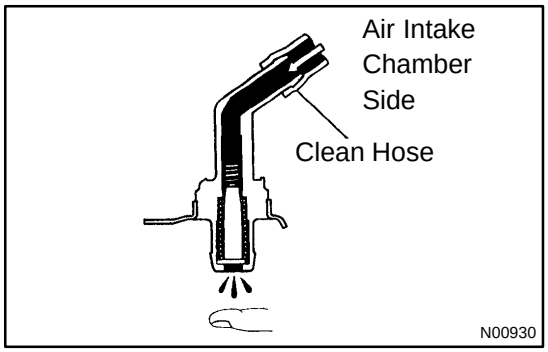

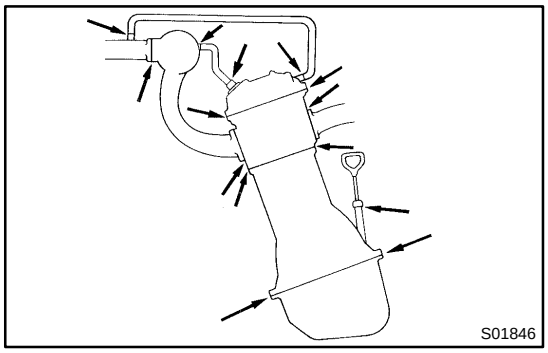

POSITIVE CRANKCASE VENTILATION (PCV) SYSTEM

EC03C-10

INSPECTION

1. INSPECT PCV VALVE

(a) Remove the PCV valve.

(b) Install clean hose to the PCV valve.

(c) Inspect the PCV valve operation.

(1) Blow into the cylinder head side, and check that air passes through easily.

CAUTION:

Do not suck air through the valve. Petroleum substances inside the valve are harmful.

(2) Blow air into the intake manifold side, and check that air passes through with difficulty.

If operation is not as specified, replace the PCV valve.

(d) Remove the clean hose from the PCV valve.

(e) Reinstall the PCV valve.

2. INSPECT PCV HOSES AND CONNECTIONS

Visually check for cracks, leaks or damage.

THREE-WAY CATALYTIC CONVERTER (TWC) SYSTEM

EC03I-02

COMPONENTS

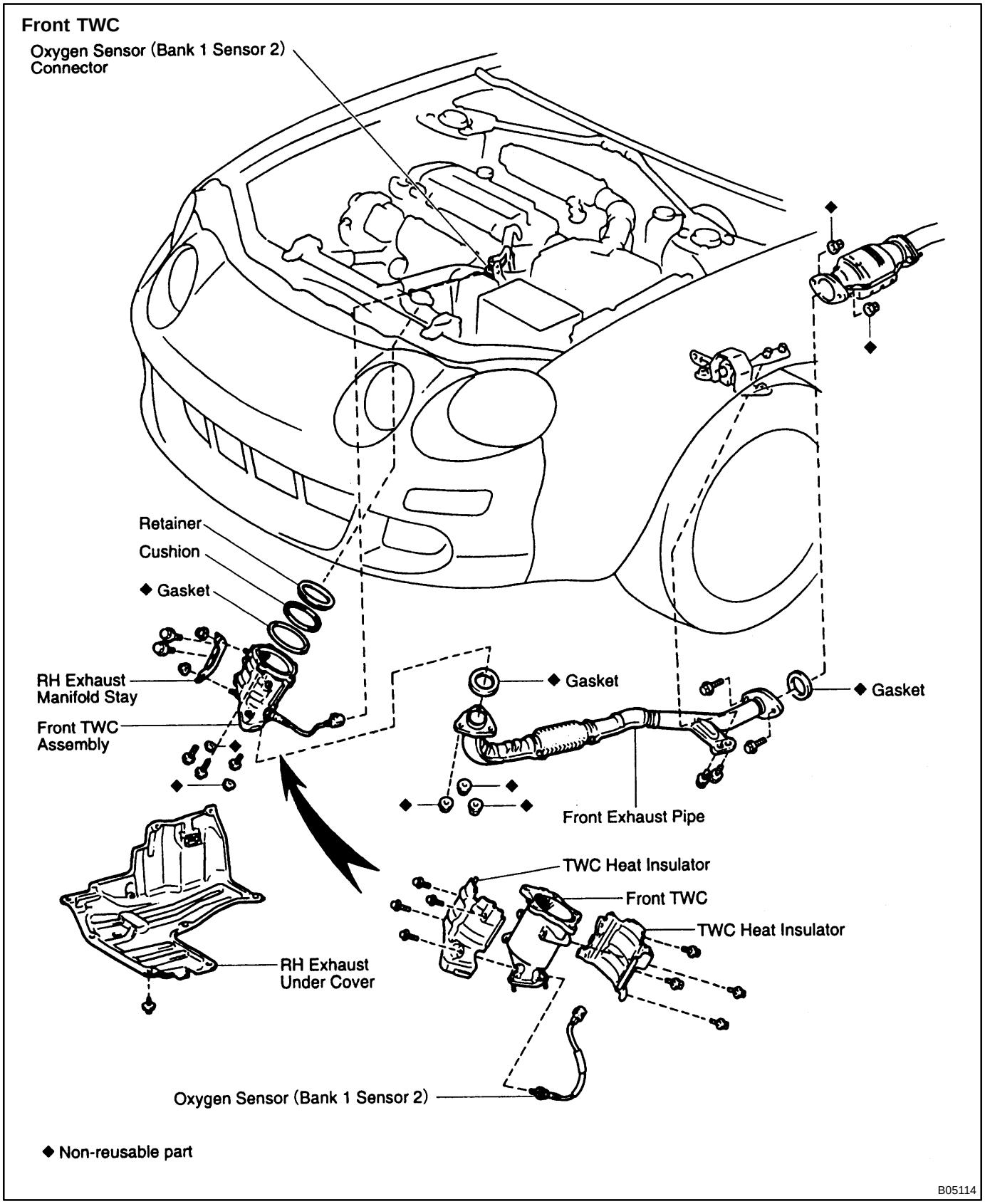

Rear TWC

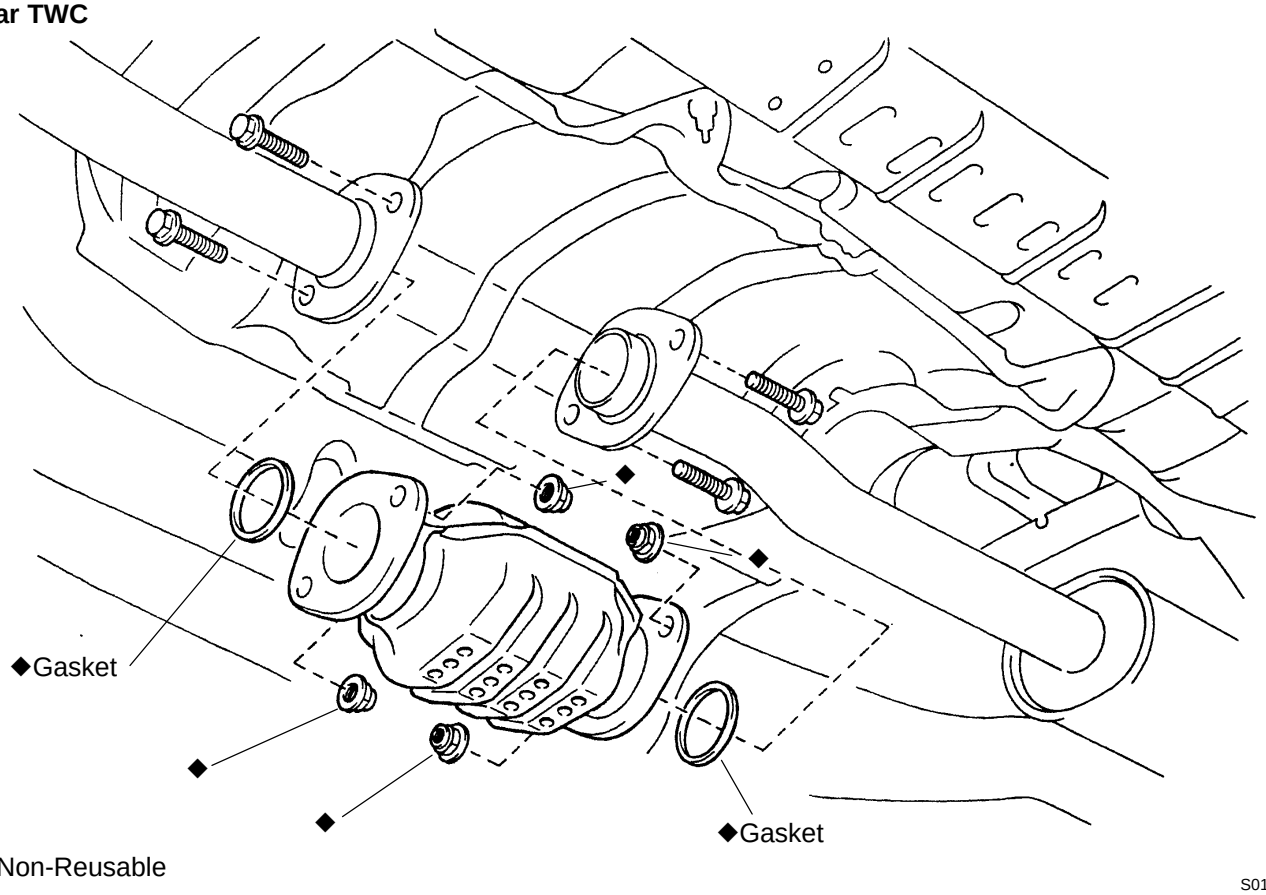

EC0K3-01

INSPECTION

1. **DRAIN ENGINE COOLANT**
2. **REMOVE WATER OUTLET (See page EM-29)**
3. **REMOVE TVV FROM WATER OUTLET**

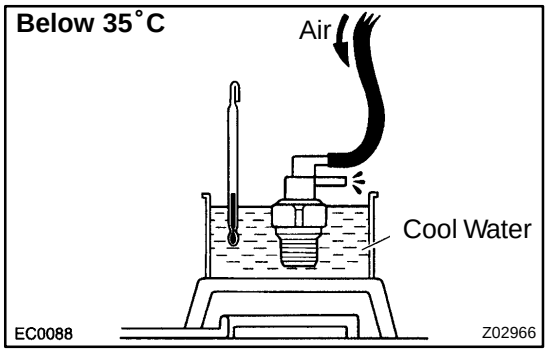

4. **INSPECT TVV OPERATION**

(a) Cool the TVV to below 35˚C (95˚F) with cool water.

(b) Check that air does not flow from the upper port to lower port.

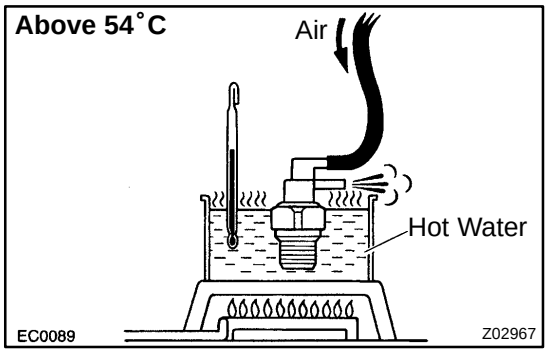

(c) Heat the TVV to above 54˚C (129˚F) with hot water.

(d) Check that air flows from the upper port to lower port.

If operation is not as specified, replace the TVV.

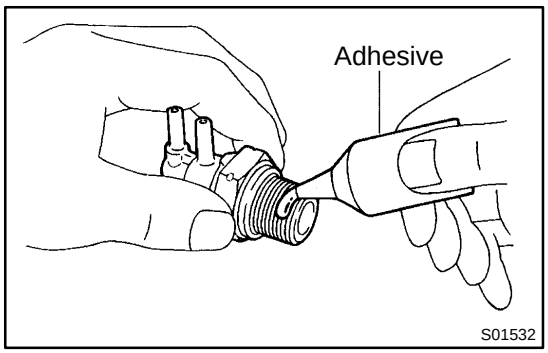

5. **REINSTALL TVV WATER OUTLET**

(a) Apply adhesive to 2 or 3 threads of the TVV, and install it.

Adhesive:
Part No. 08833-00070, THREE BOND 1324 or equivalent

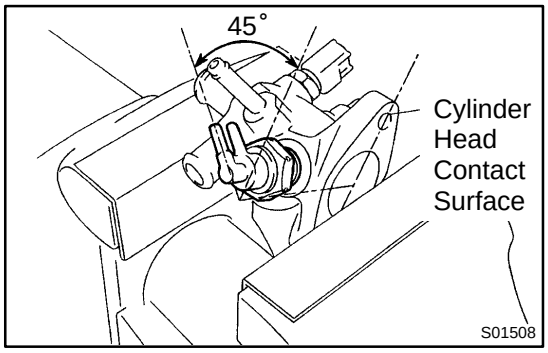

(b) Install the TVV with the port faces in the direction indicated in the illustration.

Torque:29 N·m (300 kgf·cm, 22 ft·lbf)

6. **REINSTALL WATER OUTLET (See page EM-53)**
7. **REFILL WITH ENGINE COOLANT**

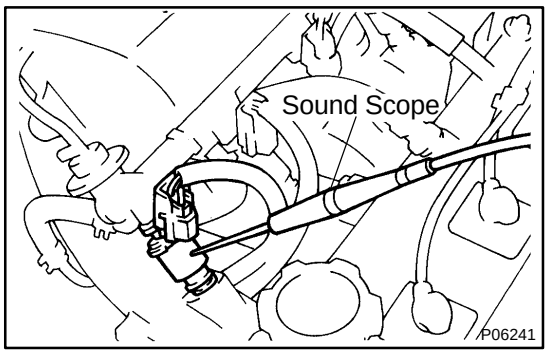

FUEL CUT RPM

SF0W5-04

INSPECTION

1. WARM UP ENGINE

Allow the engine to warm up to normal operating temperature.

2. CONNECT TOYOTA HAND-HELD TESTER OR OBDII SCAN TOOL

(See page EM-9)

3. INSPECT FUEL CUT RPM OPERATION

(a) Increase the engine speed to at least 3,500 rpm.

(b) Check for injector operating noise.

(c) Check that when the throttle lever is released, injector operation noise stops momentarily and then resumes.

HINT:

Measure with the A/C OFF.

Fuel return speed: 1,400 rpm

4. DISCONNECT TOYOTA HAND- HELD TESTER OR OBDII SCAN TOOL

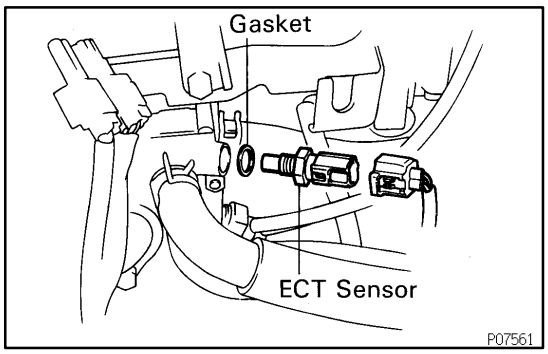

ENGINE COOLANT TEMPERATURE (ECT) SENSOR

SF1C5-01

INSPECTION

1. **DRAIN ENGINE COOLANT**
2. **REMOVE ECT SENSOR**

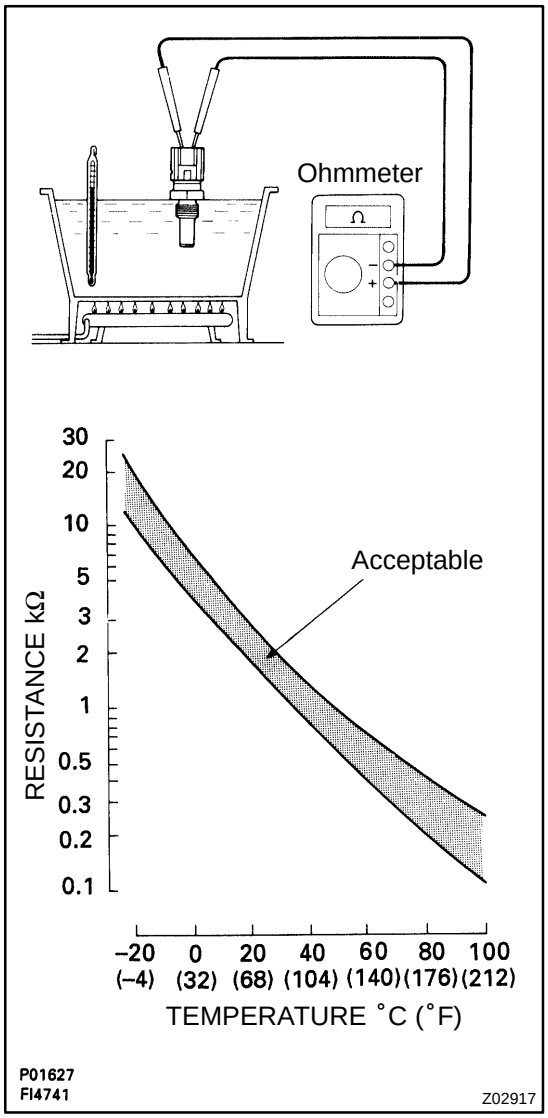

3. **INSPECT ECT SENSOR**

Using an ohmmeter, measure the resistance between the terminals.

Resistance: Refer to the graph

If the resistance is not as specified, replace the ECT sensor.

4. **REINSTALL ECT SENSOR**
5. **REFILL WITH ENGINE COOLANT**

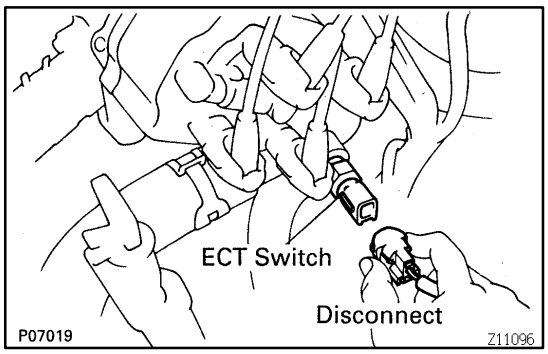

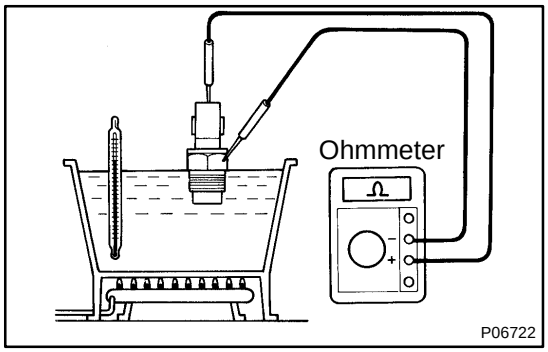

ENGINE COOLANT TEMPERATURE (ECT) SWITCH

CO0ZK-01

INSPECTION

1. DRAIN ENGINE COOLANT

2. DISCONNECT ECT SWITCH CONNECTOR

3. REMOVE ECT SWITCH

4. INSPECT ECT SWITCH

(a) Using an ohmmeter, check that there is no continuity between the terminals when the coolant temperature is above 93˚C (199˚F).

If there is continuity, replace the switch.

(b) Using an ohmmeter, check that there is continuity between the terminals when the coolant temperature is below 83˚C (181˚F).

If there is no continuity, replace the switch.

5. REINSTALL ECT SWITCH

6. RECONNECT ECT SWITCH CONNECTOR

7. REFILL WITH ENGINE COOLANT

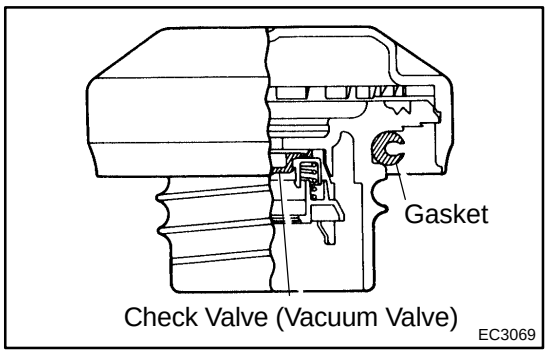

EVAPORATIVE EMISSION (EVAP) CONTROL SYSTEM

EC0FN-02

INSPECTION

1. VISUALLY INSPECT LINES AND CONNECTIONS

Look for loosen connections, sharp bends or damage.

2. VISUALLY INSPECT FUEL TANK

Look for deformation, cracks or fuel leakage.

3. VISUALLY INSPECT FUEL TANK CAP

Check if the cap and/or gasket are deformed or damaged.
If necessary, repair or replace the cap.

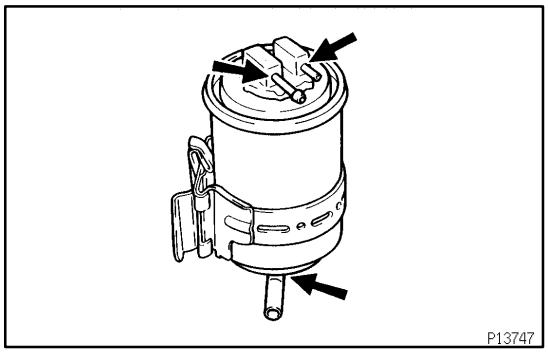

4. REMOVE CHARCOAL CANISTER

5. REMOVE CAP FROM CHARCOAL CANISTER

6. VISUALLY INSPECT CHARCOAL CANISTER

Look for cracks or damage.

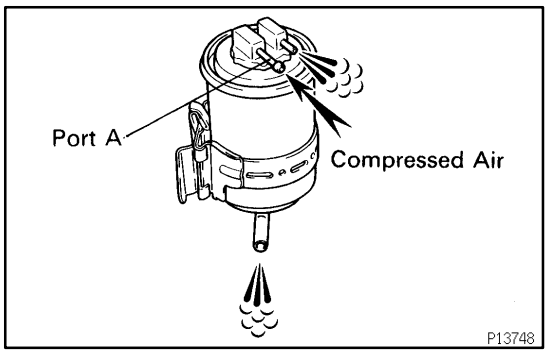

7. INSPECT FOR CLOGGED FILTER AND STUCK CHECK VALVE

(a) Using low pressure compressed air 4.71 kPa (48 gf/cm^2, 0.68 psi), blow into port A and check that air flows without resistance from the other ports.

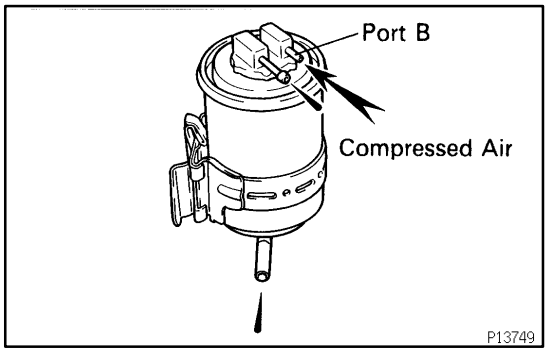

(b) Blow air 4.71 kPa (48 gf/cm^2, 0.68 psi) into port B and check that air does not flow from the other ports.

If a problem is found, replace the charcoal canister.

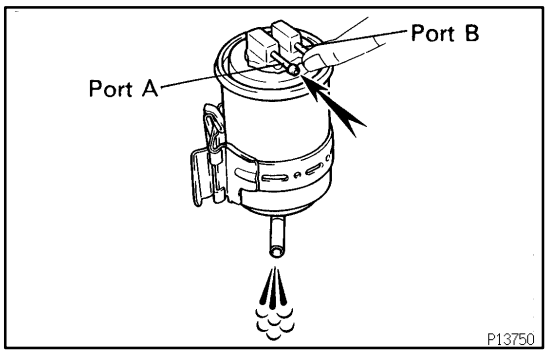

8. CLEAN FILTER IN CANISTER

Clean the filter by blowing 294 kPa (3 kgf/cm^2, 43 psi) of compressed air into port A while holding port B closed.

NOTICE:

Do not attempt to wash the canister.No activated carbon should come out.

9. REINSTALL CAP TO CHARCOAL CANISTER

10. REINSTALL CHARCOAL CANISTER

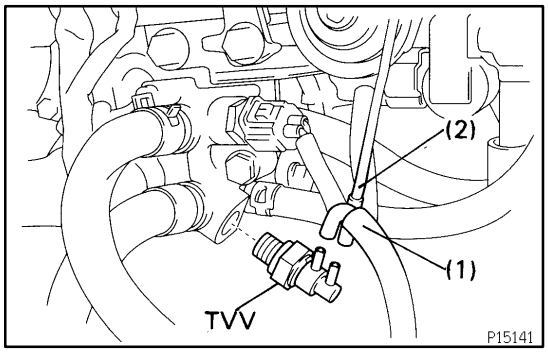

11. DRAIN ENGINE COOLANT

12. REMOVE TVV FROM WATER INLET HOUSING

(a) Disconnect these hoses:
  (1) Vacuum hose (from charcoal canister)
  (2) Vacuum hose (from throttle body)

(b) Remove the TVV.

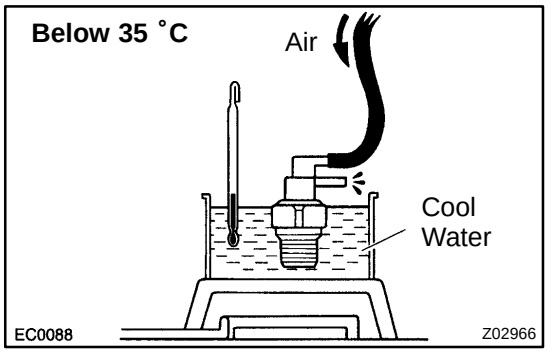

13. INSPECT TVV OPERATION

(a) Cool the TVV to below 35°C (95°F) with cool water.

(b) Check that air does not flow from the upper port to lower port.

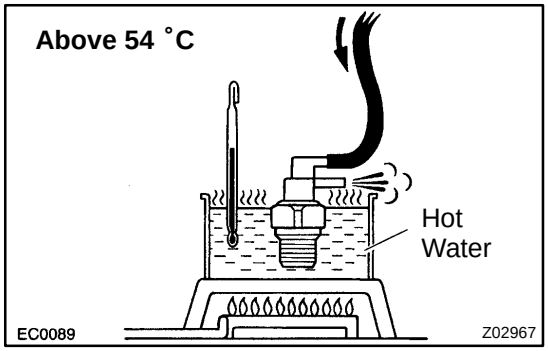

(c) Heat the TVV to above 54°C (129°F) with hot water.

(d) Check that air flows from the upper port to lower port.

If operation is not as specified, replace the TVV.

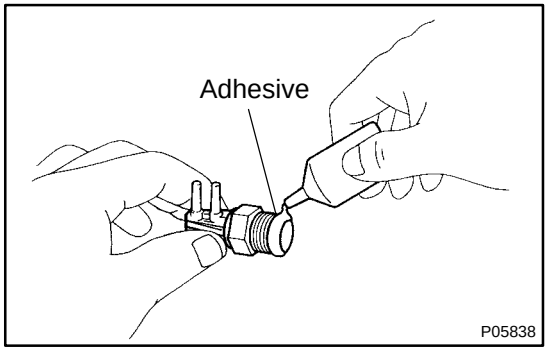

14. REINSTALL TVV

(a) Apply adhesive to 2 or 3 threads of the TVV, and install it.

Adhesive:
Part No. 08833-00070, THREE BOND 1324 or equivalent
Torque: 29 N·m (300 kgf·cm, 22 ft·lbf)

(b) Reconnect 2 vacuum hoses.

15. REFILL WITH ENGINE COOLANT

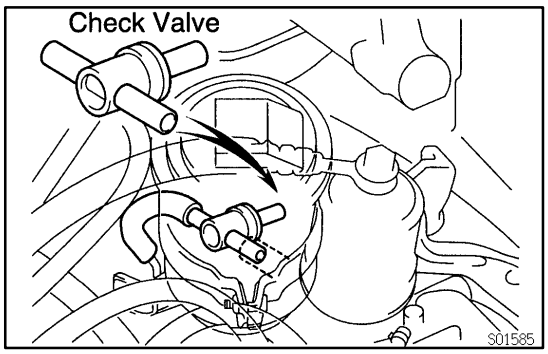

16. REMOVE CHECK VALVE

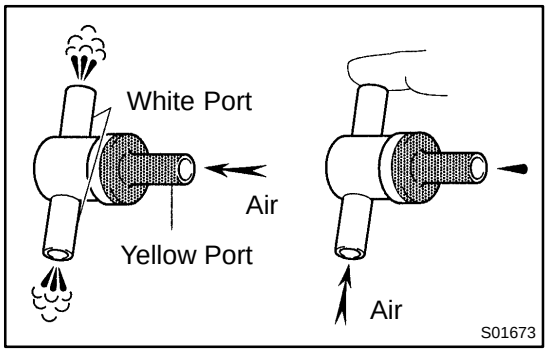

17. INSPECT CHECK VALVE

(a) Check that air flows from the yellow port to the white ports.

(b) Plug the white ports on one side, and check thar air does not flow from the white port to the yellow port.

If operation is not as specified, replace the check valve.

18. REINSTALL CHECK VALVE

HINT:

Install the check valve with the yellow port facing the body side.

EXHAUST GAS RECIRCULATION (EGR) SYSTEM

EC0FO-01

COMPONENTS

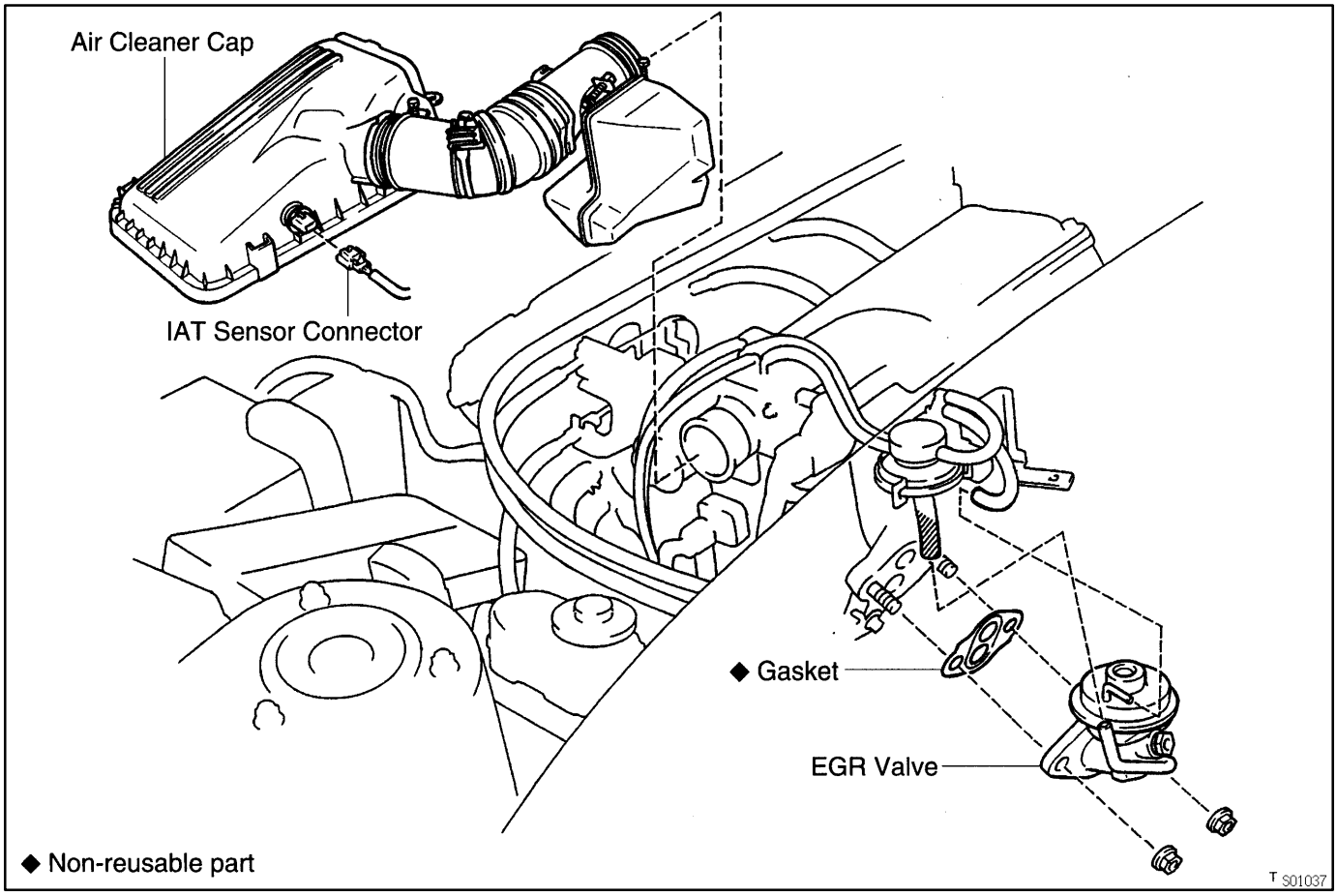

EC0FP-02

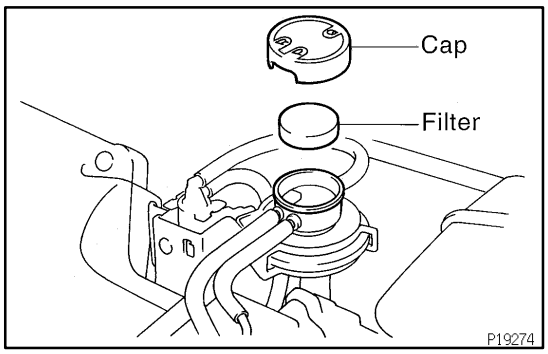

INSPECTION

1. INSPECT EGR SYSTEM

(a) Inspect and clean the filter in EGR vacuum modulator.
  (1) Remove the cap and filter.
  (2) Check the filter for contamination or damage.
  (3) Using compressed air, clean the filter.

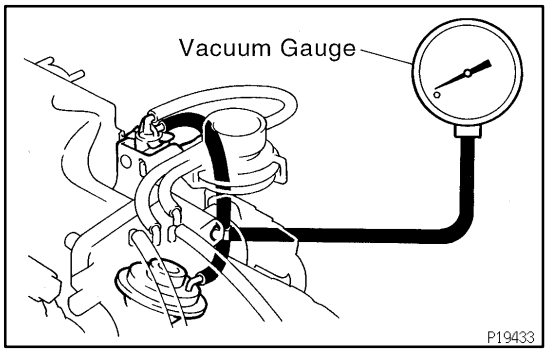

  (4) Reinstall the filter and cap.

HINT:
Install the filter with the coarser surface facing the atmospheric side (outward).

(b) Install the vacuum gauge.
  Using a 3-way connector, connect a vacuum gauge to the hose between EGR valve and VSV.

(c) Inspect the seating of EGR valve.
  Start the engine and check that the engine starts and runs at idle.

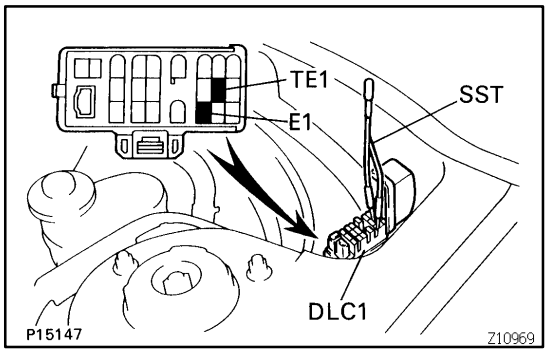

(d) Connect the terminals TE1 and E1 of data link connector 1.
  Using SST, connect terminals TE1 and E1 of the data link connector 1.
  SST 09843-18020

(e) Inspect the VSV operation with the cold engine.
  (1) The engine coolant temperature should be below 47˚C (117˚F).
  (2) Check that the vacuum gauge indicates zero at 2,500 rpm.

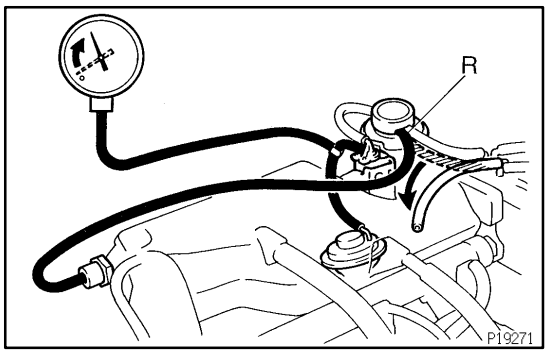

(f) Inspect operation of the VSV and EGR vacuum modulator with the hot engine.
  (1) Warm up the engine to above 53˚C (127˚F).
  (2) Check that the vacuum gauge indicates low vacuum at 2,500 rpm.
  (3) Disconnect the vacuum hose from port R of the EGR vacuum modulator and connect port R directly to the intake manifold with another hose.
  (4) Check that the vacuum gauge indicates high vacuum at 2,500 rpm.

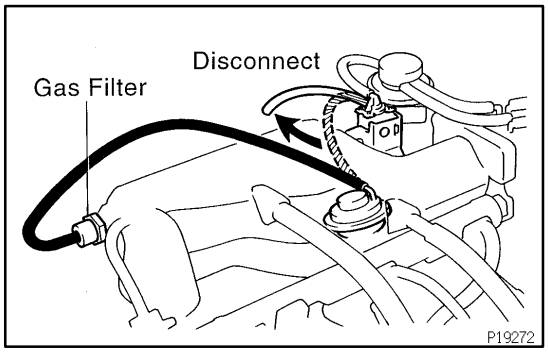

HINT:
As a large amount of exhaust gas enters, the engine will misfire slightly.

(g) Remove the vacuum gauge.
  Remove the vacuum gauge, and reconnect the vacuum hoses to the proper locations.

(h) Inspect the EGR valve.
(1) Apply vacuum directly to the EGR valve with the engine idling.
(2) Check that the engine runs rough or dies.
(3) Reconnect the vacuum hoses to the proper locations.
(i) Remove SST from data link connector 1.
SST 09843-18020

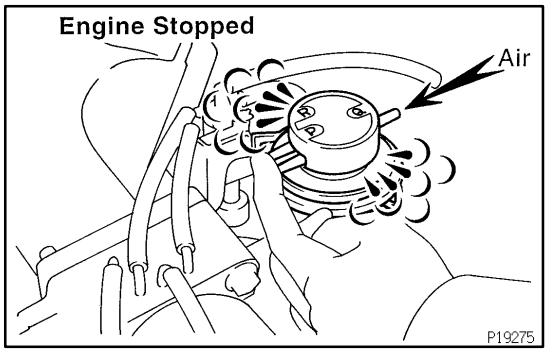

2. INSPECT EGR VACUUM MODULATOR

(a) Inspect the EGR vacuum modulator operation.
(1) Disconnect the vacuum hoses from ports P, Q and R of the EGR vacuum modulator.
(2) Block ports P and R with your finger.
(3) Blow air into port Q, and check that the air passes through to the air filter side freely.

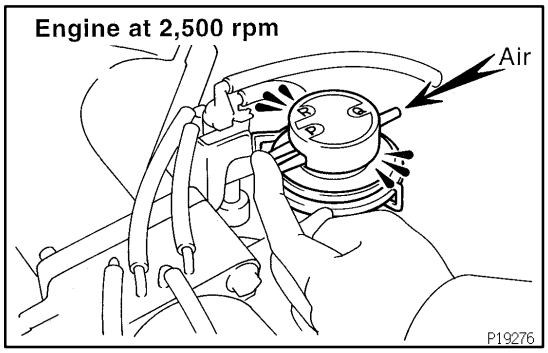

(4) Start the engine, and maintain speed at 2,500 rpm.
(5) Repeat the above test. Check that there is a strong resistance to air flow.
(6) Reconnect the vacuum hoses to the preper locations.

3. INSPECT EGR VACUUM MODULATOR

(a) Remove the air cleaner hose and cap (See page EM-23).
(b) Remove the EGR valve.
(1) Disconnect the following hoses and connector:
- Vacuum hose
- EGR hose
- EGR gas temp. sensor connector

(2) Remove the 2 nuts, EGR valve and gasket.

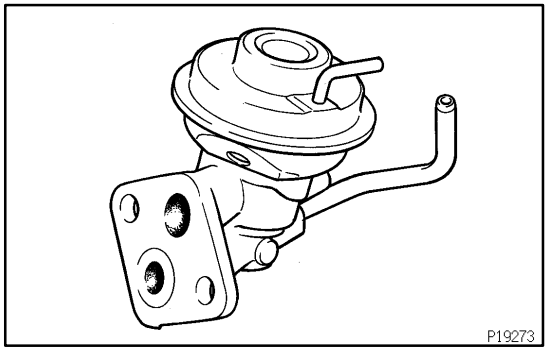

(c) Inspect the EGR valve.
Check for sticking and heavy carbon deposits.
If a problem is found, replace the valve.
(d) Reinstall the EGR valve.
(1) Install the 2 nuts, EGR valve and gasket.
Torque: 13 N·m (130 kgf·cm, 9 ft·lbf)
HINT:
Install the EGR valve with a new gasket.

(2) Connect the EGR gas temp. sensor connector.
- Connect the EGR hose.
- Connect the vacuum hose.

(e) Install the air cleaner hose and cap (See page EM-44).

SF0VI-03

COMPONENTS

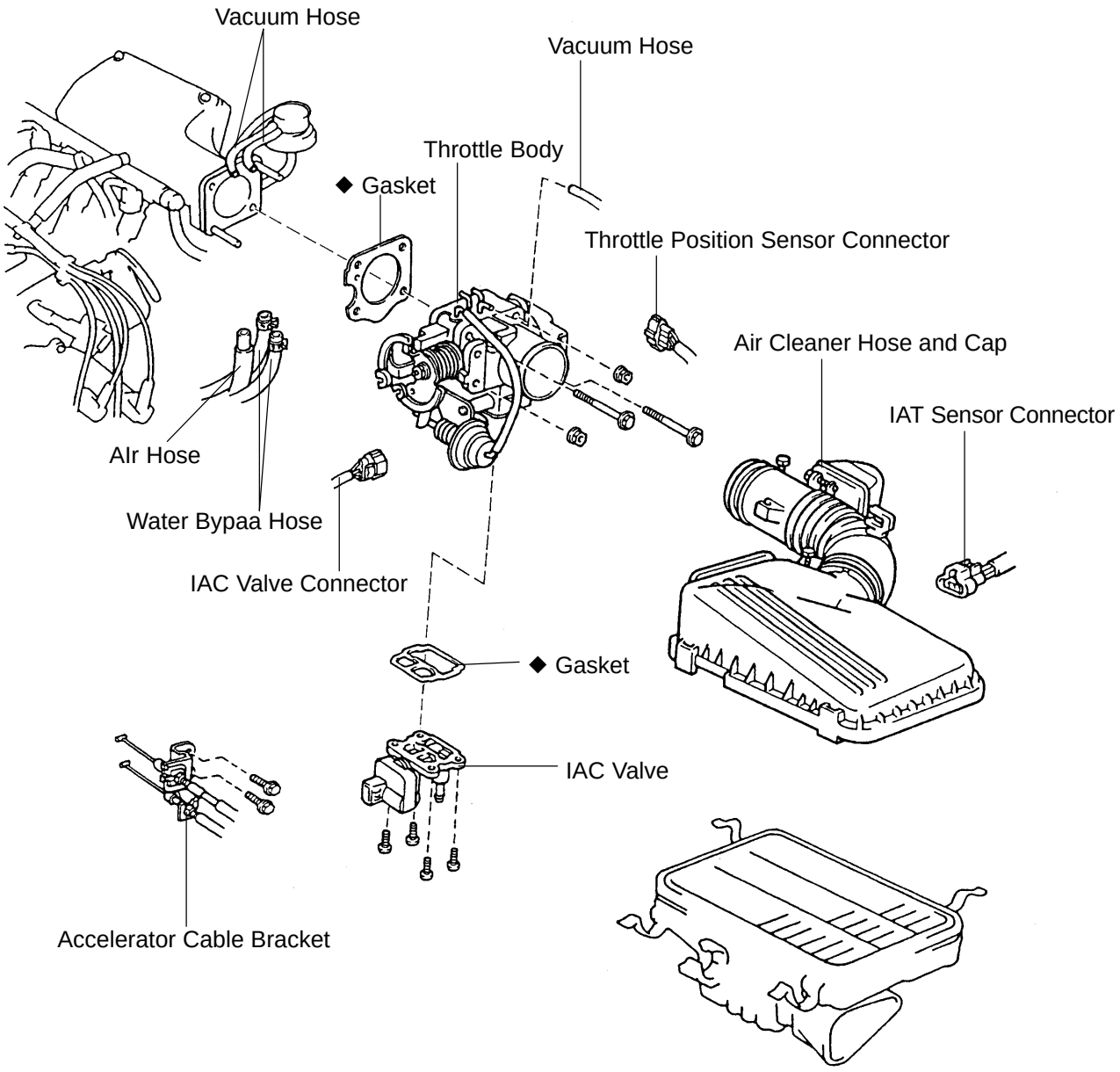

◆ Non-reusable part

S01001

SF0VK-04

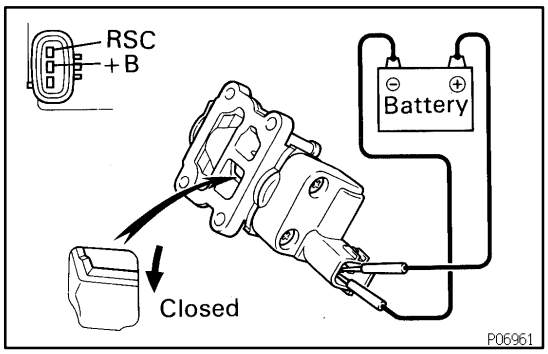

INSPECTION

INSPECT IAC VALVE OPERATION

(a) Connect the positive (+) lead from the battery to terminal +B and negative (-) lead to terminal RSC, and check that the valve is closed.

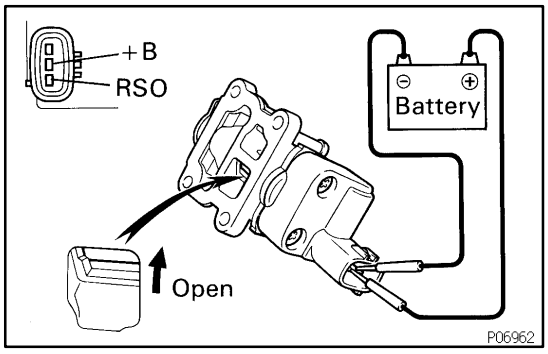

(b) Connect the positive (+) lead from the battery to terminal +B and negative (-) lead to terminal RSO, and check that the valve is open.

If operation is not as specified, replace the IAC valve.

SF0VL-03

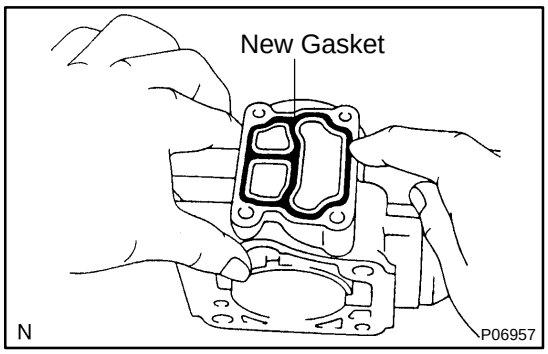

INSTALLATION

1. INSTALL IAC VALVE

(a) Place a new gasket on the throttle body.

(b) Install the IAC valve with the 4 screws.

2. INSTALL THROTTLE BODY

(See page SF-35)

IDLE AIR CONTROL (IAC) VALVE

SF0VH-03

ON-VEHICLE INSPECTION

1. INSPECT IAC VALVE OPERATION

(a) Initial conditions:
- Engine at normal operating temperature
- Idle speed set correctly
- Transmission in neutral position

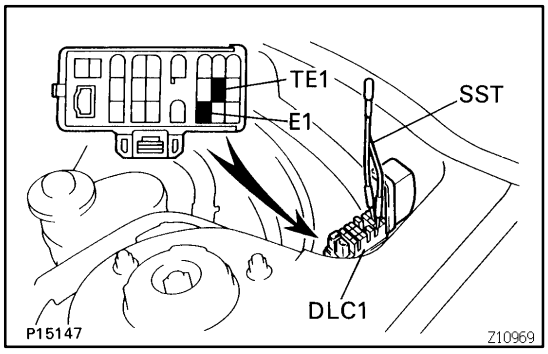

(b) Using SST, connect terminals TE1 and E1 of the DLC1.
SST 09843-18020

(c) After engine rpm is kept at 900 - 1,300 rpm for 5 seconds, check that it returns to idle speed.

If the rpm operation is not as specified, check the IAC valve, wiring and ECM.

(d) Remove the SST from the DLC1.
SST 09843-18020

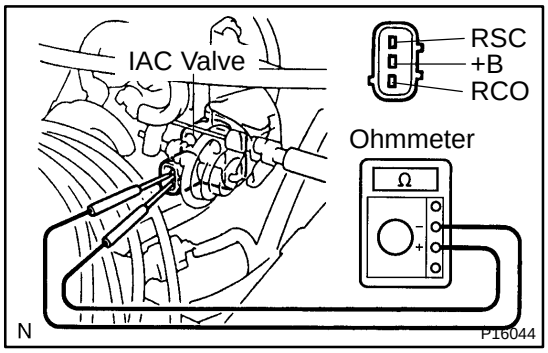

2. INSPECT IAC VALVE RESISTANCE

NOTICE:

"Cold" and "Hot" in these sentences express the temperature of the coils themselves. "Cold" is from -10˚C (14˚F) to 50˚C (122˚F) and "Hot" is from 50˚C (122˚F) to 100˚C (212˚F).

(a) Disconnect the IAC valve connector.

(b) Using an ohmmeter, measure the resistance between terminal +B and other terminals (RSC, RSO).

Resistance:

Cold	17.0 - 24.5 Ω
Hot	21.5 - 28.5 Ω

If resistance is not as specified, replace the IAC valve.

(c) Reconnect the IAC valve connector.

SF0VJ-03

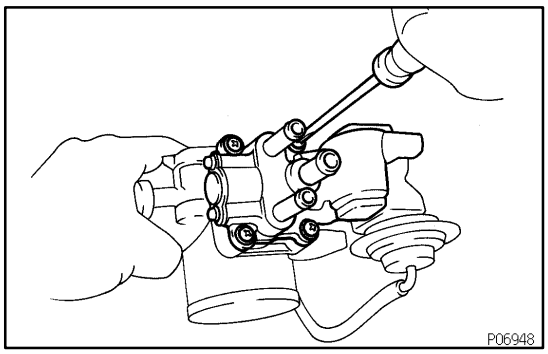

REMOVAL

1. REMOVE THROTTLE BODY
(See page SF-31)

2. REMOVE IAC VALVE

Remove the 4 screws, IAC valve and gasket.

INTAKE AIR TEMPERATURE (IAT) SENSOR

COMPONENTS

SF0VT-03

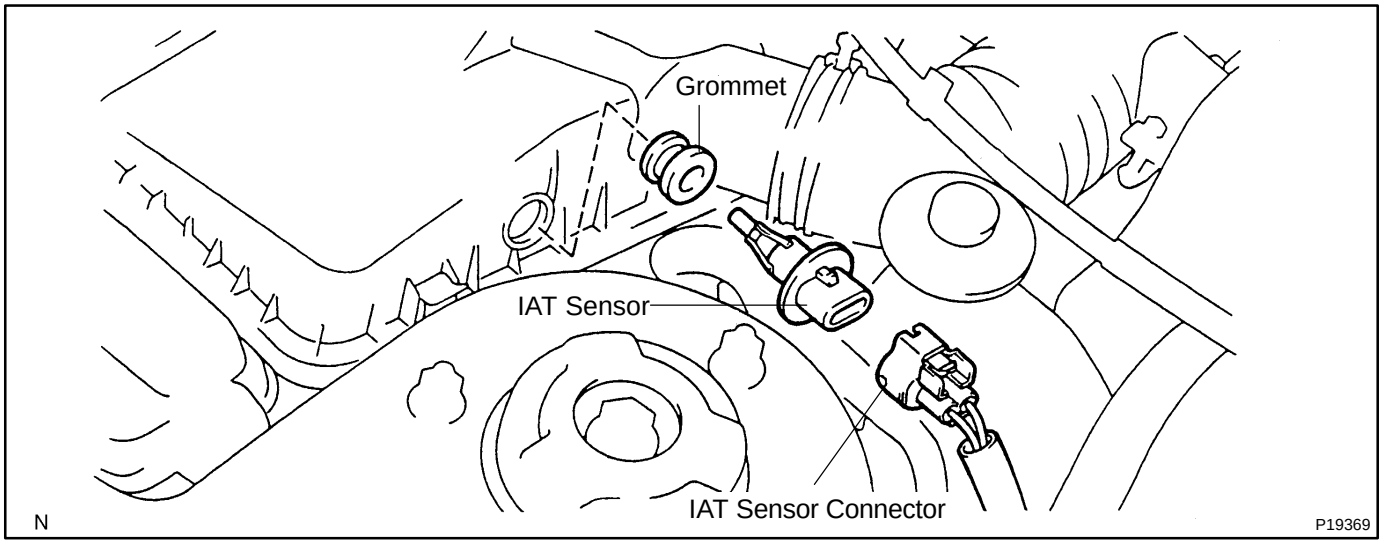

SF0VU-03

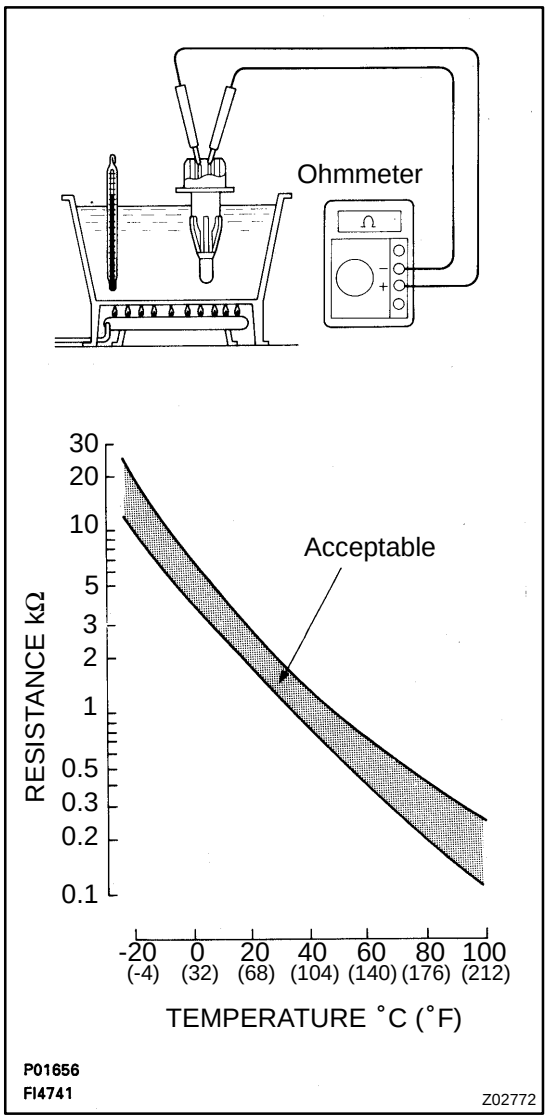

INSPECTION

1. REMOVE IAT SENSOR

2. INSPECT IAT SENSOR

Using an ohmmeter, measure the resistance between the terminals.

Resistance: Refer to the graph

If the resistance is not as specified, replace the sensor.

3. REINSTALL IAT SENSOR

MANIFOLD ABSOLUTE PRESSURE (MAP) SENSOR

COMPONENTS

SF0VV-03

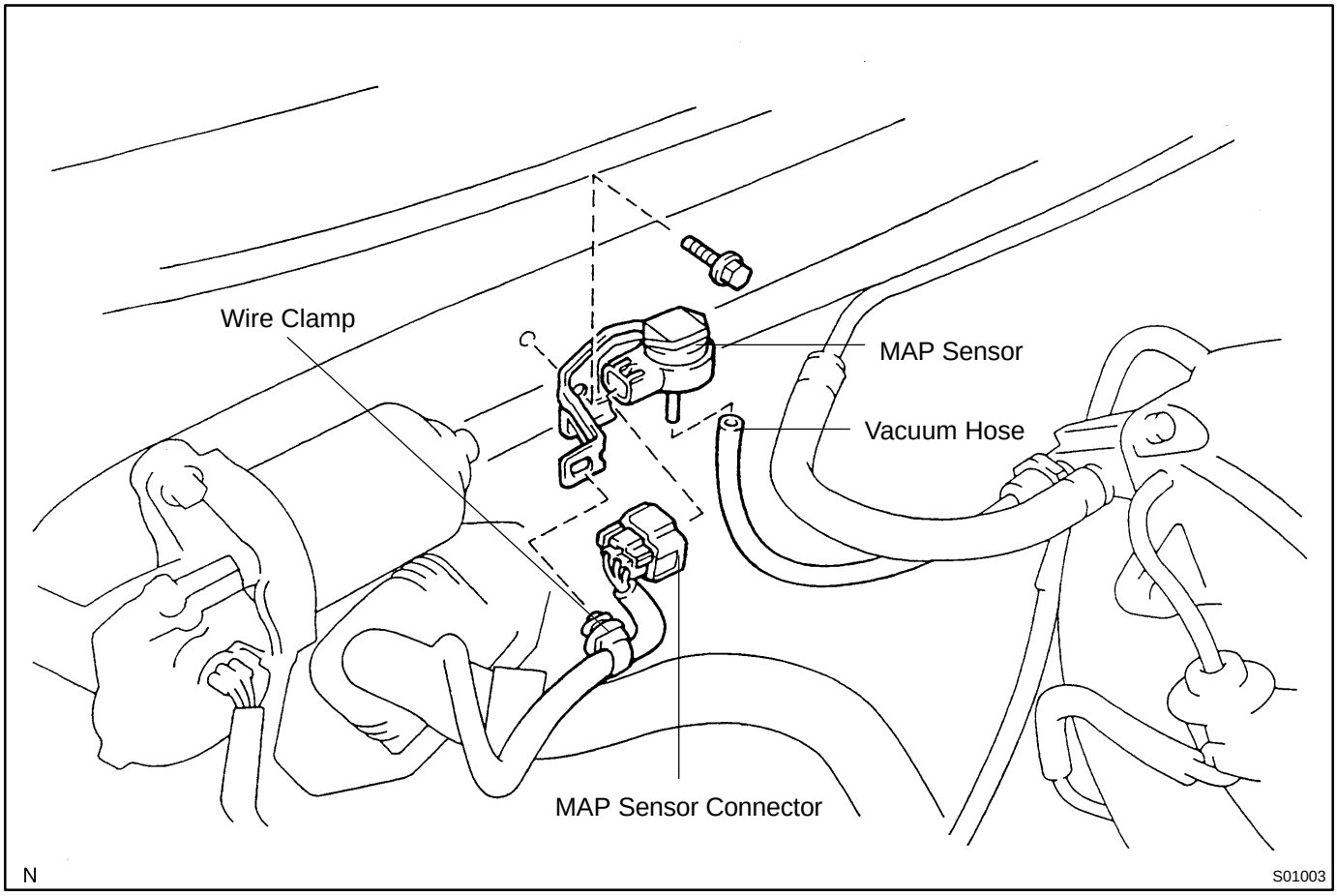

SFI SYSTEM

SF1BV-01

PRECAUTION

1. BEFORE WORKING ON FUEL SYSTEM, DISCONNECT NEGATIVE (-) TERMINAL CABLE FROM BATTERY

HINT:

Any diagnostic trouble code retained by the computer will be erased when the negative (-) terminal cable is removed from the battery.

Therefore, if necessary, read the diagnosis before removing the negative (-) terminal cable from the battery.

2. DO NOT SMOKE OR WORK NEAR AN OPEN FLAME WHEN WORKING ON THE FUEL SYSTEM

3. KEEP GASOLINE AWAY FROM RUBBER OR LEATHER PARTS

4. PRECAUTION WHEN CONNECTING GAUGE

Use battery as the power source for the timing light, etc.

5. MAINTENANCE PRECAUTIONS

(a) In event of engine misfire, these precautions should be taken.
  (1) Check proper connection to battery terminals, etc.
  (2) Handle high-tension cords carefully.
  (3) After repair work, check that the ignition coil terminals and all other ignition system lines are reconnected securely.
  (4) When cleaning the engine compartment, be especially careful to protect the electrical system from water.

(b) Precautions when handling the oxygen sensor.
  (1) Do not allow oxygen sensor to drop or hit against an object.
  (2) Do not allow the sensor to come into contact with water.

6. IF VEHICLE IS EQUIPPED WITH MOBILE RADIO SYSTEM (HAM, CB, ETC.)

If the vehicle is equipped with a mobile communication system, refer to the precaution in the IN section.

7. AIR INDUCTION SYSTEM

(a) Separation of the engine oil dipstick, oil filler cap, PCV hose, etc. may cause the engine to run out of tune.

(b) Disconnection, looseness or cracks in the parts of the air induction system between the throttle body and cylinder head will allow air suction and cause the engine to run out of tune.

8. ELECTRONIC CONTROL SYSTEM

(a) Before removing SFI wiring connectors, terminals, etc., first disconnect the power by either turning the ignition switch to LOCK or disconnecting the negative (-) terminal cable from the battery.

HINT:
Always check the diagnostic trouble code before disconnecting the negative (-) terminal cable from the battery.

(b) When installing the battery, be especially careful not to incorrectly connect the positive (+) and negative (-) cables.
(c) Do not permit parts to receive a severe impact during removal or installation. Handle all SFI parts carefully, especially the ECM.
(d) Be careful during troubleshooting as there are numerous transistor circuit, and even slight terminal contact can cause further troubles.
(e) Do not open the ECM cover.
(f) When inspecting during rainy weather, take care to prevent entry of water. Also, when washing the engine compartment, prevent water from getting on the SFI parts and wiring connectors.
(g) Parts should be replaced as an assembly.
(h) Care should be taken when pulling out and inserting wiring connectors.
    (1) Release the lock and pull out the connector, pulling on the connectors.
    (2) Fully insert the connector and check that it is locked.

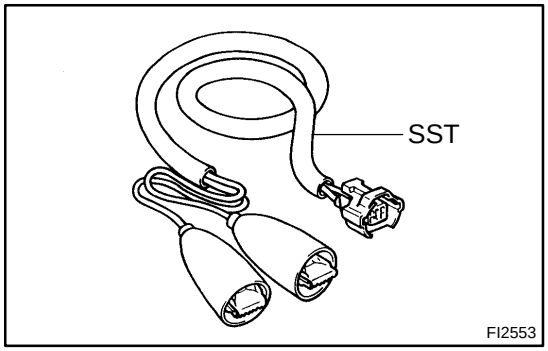

(i) Use SST for inspection or test of the injector or its wiring connector.
SST 09842-30070

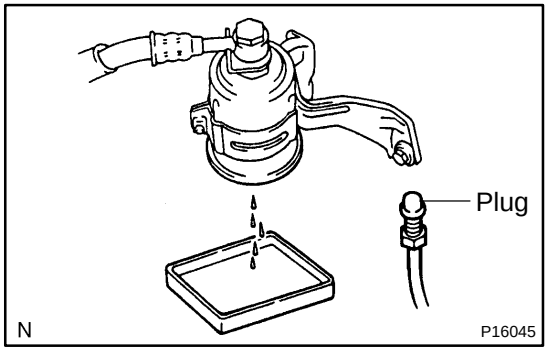

9. FUEL SYSTEM

(a) When disconnecting the high fuel pressure line, a large amount of gasoline will spill out, so observe these procedures:
    (1) Disconnect the fuel pump connector.
    (2) Put a container under the connection.
    (3) Slowly loosen the connection.
    (4) Disconnect the connection.
    (5) Plug the connection with a rubber plug.

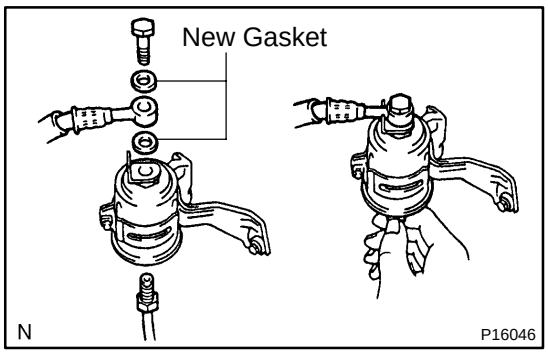

(b) When connecting the union bolt on the high pressure pipe union, observe these procedures:
(1) Always use 2 new gaskets.
(2) Tighten the union bolt by hand.
(3) Tighten the union bolt to the specified torque.
Torque: 29 N·m (300 kgf·cm, 21 ft·lbf)

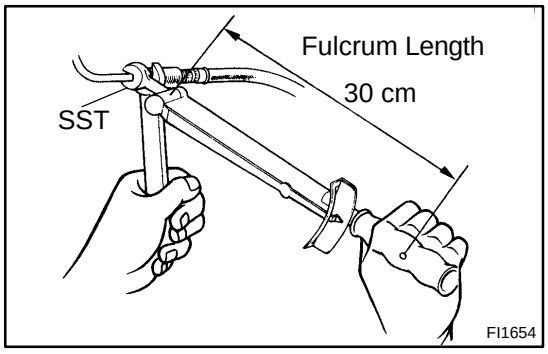

(c) When connecting the flare nut on the high pressure pipe union, observe these procedures:
(1) Apply a light coat of engine oil to the flare nut, and tighten the flare nut by hand.
(2) Using SST, tighten the flare nut to specified torque.
SST 09631-22020
Torque:
Fuel pump side: 24 N·m (240 kgf·cm, 17 ft·lbf)
Others: 30 N·m (310 kgf·cm, 22 ft·lbf)

HINT:
Use a torque wrench with a fulcrum length of 30 cm (11.81 in.).

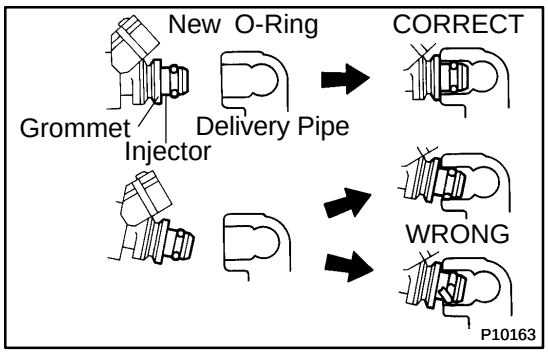

(d) Observe these precautions when removing and installing the injectors.
(1) Never reuse the O-ring.
(2) When placing a new O-ring on the injector, take care not to damage it in any way.
(3) Coat a new O-ring with spindle oil or gasoline before installing-never use engine, gear or brake oil.

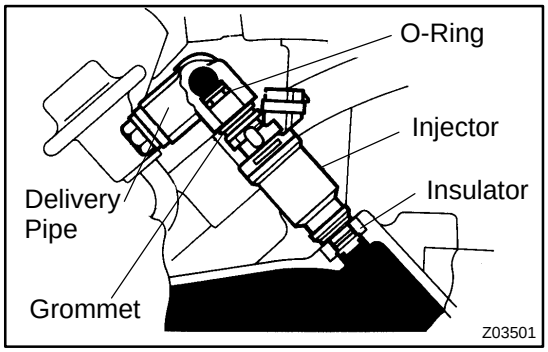

(e) Install the injector to the delivery pipe and intake manifold, as shown in the illustration.

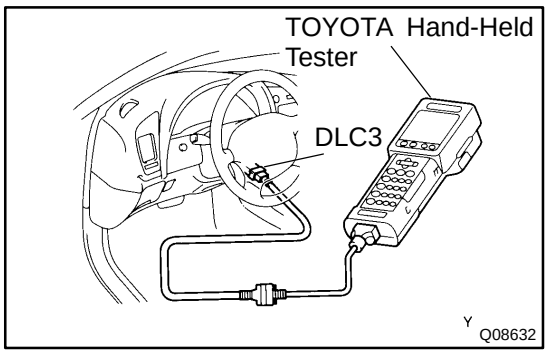

(f) Check that there are no fuel leaks after doing maintenance anywhere on the fuel system.
(1) Connect a TOYOTA hand-held tester to the DLC3.
(2) Turn the ignition switch ON and push the TOYOTA hand-held tester main switch ON.

NOTICE:
Do not start the engine.

(3) Select the active test mode on the TOYOTA hand-held tester.
(4) Please refer to the TOYOTA hand-held tester operator's manual for further details.
(5) If you have no TOYOTA hand-held tester, connect the positive (+) and negative (-) leads from the battery to the fuel pump connector (See page SF-5).

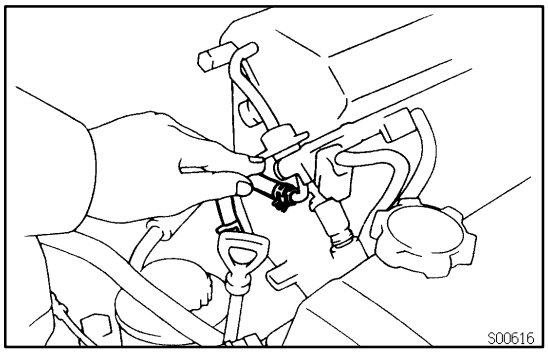

(6) Pinch the fuel return hose. The pressure in the high pressure line will rise to approx. 392 kPa (4 kgf/cm^2, 57 psi). In this state, check to see that there are no leaks from any part of the fuel system.

NOTICE:
Always pinch the hose. Avoid bending as it may cause the hose to crack.

(7) Turn the ignition switch OFF.
(8) Disconnect the TOYOTA hand-held tester from the DLC3.

SF1C6-01

INSPECTION

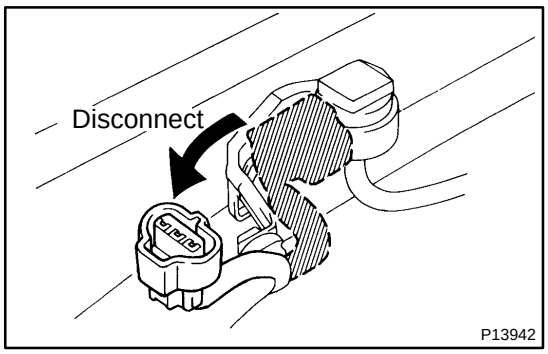

1. INSPECT POWER SOURCE VOLTAGE OF MAP SENSOR

(a) Disconnect the MAP sensor connector.

(b) Turn the ignition switch ON.

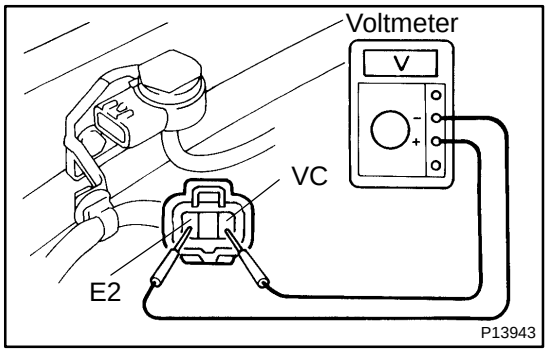

(c) Using a voltmeter, measure the voltage between connector terminals VC and E2 of the wiring harness side.
Voltage: 4.5 - 5.5 V

(d) Turn the ignition switch OFF.

(e) Reconnect the MAP sensor connector.

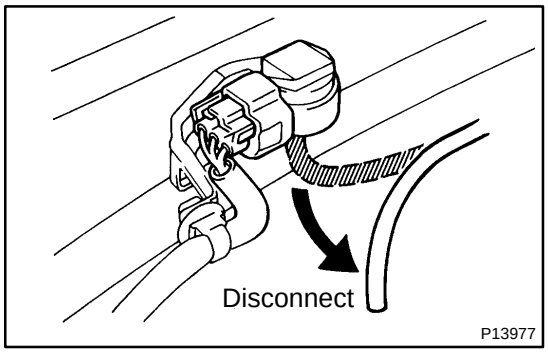

2. INSPECT POWER OUTPUT OF MAP SENSOR

(a) Turn the ignition switch ON.

(b) Disconnect the vacuum hose from the MAP sensor.

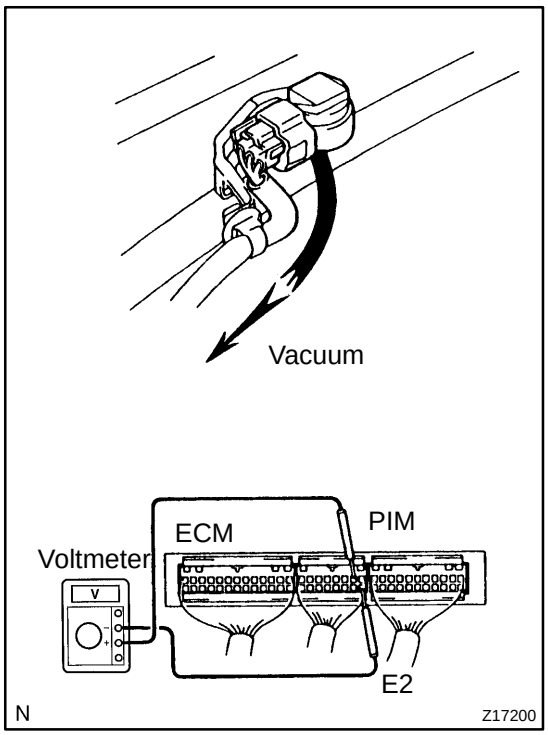

(c) Connect a voltmeter to terminals PIM and E2 of the ECM, and measure the output voltage under ambient atmospheric pressure.

(d) Apply vacuum to the MAP sensor in 13.3 kPa (100 mmHg, 3.94 in.Hg) segments to 66.7 kPa (500 mmHg, 19.69 in.Hg).

(e) Measure the voltage drop from step (c) above for each segment.
Voltage drop

Applied Vacuum kPa (mm Hg / in. Hg)	13.3 (100 / 3.94)	26.7 (200 / 7.87)	40.0 (300 / 11.81)	53.5 (400 / 15.75)	66.7 (500 / 19.69)
Voltage drop V	0.3 - 0.5	0.7 - 0.9	1.1 - 1.3	1.5 - 1.7	1.9 - 2.1

V00494

(f) Reconnect the vacuum hose to the MAP sensor.

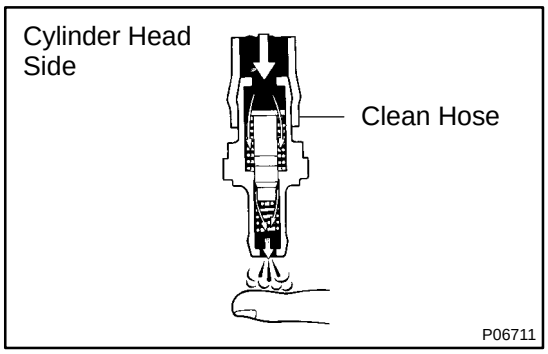

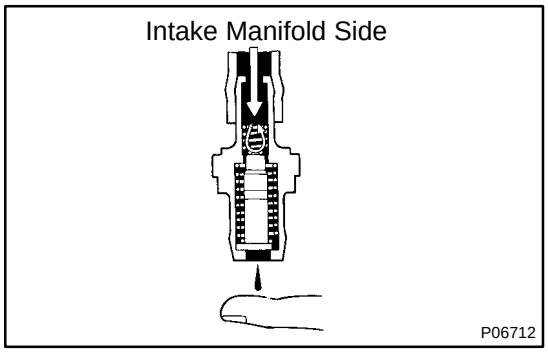

POSITIVE CRANKCASE VENTILATION (PCV) SYSTEM

EC0FM-01

INSPECTION

1. REMOVE PCV VALVE

2. INSTALL CLEAN HOSE TO PCV VALVE

3. INSPECT PCV VALVE OPERATION

(a) Blow into the cylinder head side, and check that air passes through easily.

CAUTION:

Do not suck air through the valve. Petroleum substances inside the valve are harmful.

(b) Blow air into the intake manifold side, and check that air passes through with difficulty.

If operation is not as specified, replace the PCV valve.

4. REMOVE CLEAN HOSE FROM PCV VALVE

5. REINSTALL PCV VALVE

6. VISUALLY INSPECT PCV HOSES AND CONNECTIONS

Check for cracks, leaks or damage.

THREE-WAY CATALYTIC CONVERTER (TWC) SYSTEM

EC0FQ-01

ON-VEHICLE INSPECTION

1. INSPECT EXHAUST PIPE ASSEMBLY

(a) Check the connections for looseness or damage.

(b) Check the clamps for weakness, cracks or damage.

2. INSPECT REAR TWC

Check for dents or damage.

If any part of the protector is damaged or dented to the extent that it contacts the TWC, repair or replace it.

3. INSPECT REAR TWC HEAT INSULATOR

(a) Check the heat insulator for damage.

(b) Check for adequate clearance between the catalytic converter and heat insulator.

EC0FR-01

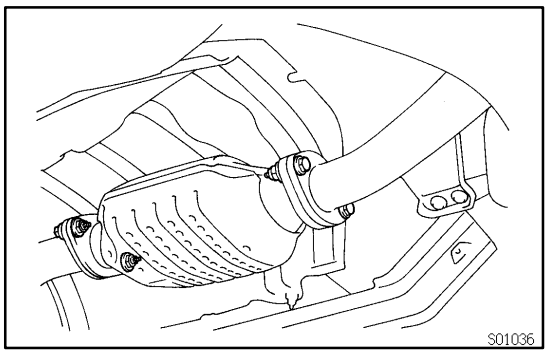

REPLACEMENT

1. REMOVE TWC

(a) Jack up the vehicle.

(b) Check that the converter is cool.

(c) Remove the 4 bolts, support bracket and 2 nuts at the front and rear of the converter.

(d) Remove the converter and 2 gaskets.

2. REINSTALL CONVERTER

(a) Install the converter and 2 new gaskets with the 4 bolts, 2 nuts and support bracket.

(b) Tighten the bolts and nuts.

Torque: 43 N·m (440 kgf·cm, 32 ft·lbf)

SHIFT LOCK SYSTEM

AX08Y-03

LOCATION

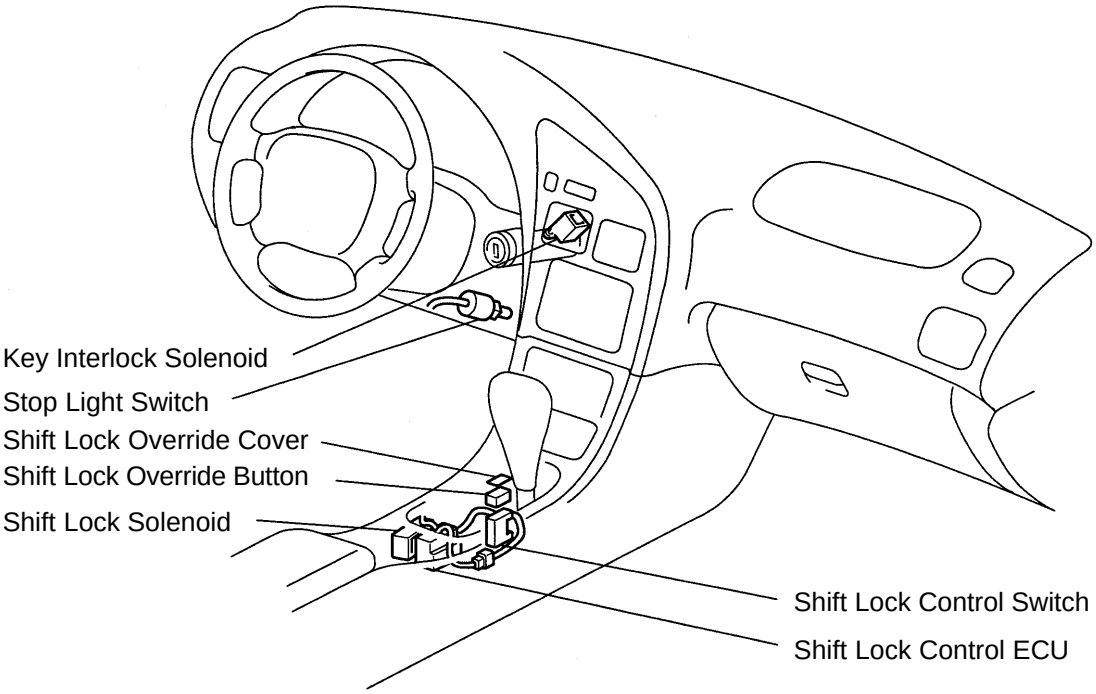

PARK/NEUTRAL POSITION (PNP) SWITCH

AX08U-02

ON-VEHICLE REPAIR

1. REMOVE ENGINE UNDER COVER

2. DISCONNECT PARK/NEUTRAL POSITION SWITCH CONNECTOR

3. REMOVE PARK/NEUTRAL POSITION SWITCH

(a) Remove the nut and disconnect the shift control cable.

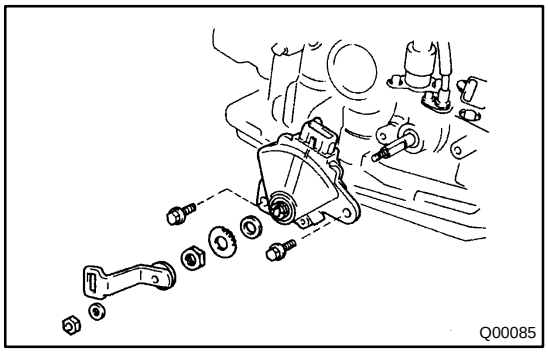

(b) Remove the nut, washer and control shaft lever.

(c) Pry off the lock plate and remove the nut.

(d) Remove the 2 bolts and park/neutral position switch.

4. INSTALL PARK/NEUTRAL POSITION SWITCH

(a) Install the park/neutral position switch with the 2 bolts.
Torque: 5.4 N·m (55 kgf·cm, 48 in.·lbf)

(b) Install a new lock plate and nut.
Torque: 6.9 N·m (70 kgf·cm, 61 in.·lbf)

(c) Bend the claws on the lock plate to fix the nut.

(d) Install the control shaft lever and nut.
Torque: 13 N·m (130 kgf·cm, 9 ft·lbf)

(e) Connect the shift control cable and install the nut.
Torque: 13 N·m (130 kgf·cm, 9 ft·lbf)

5. CONNECT PARK/NEUTRAL POSITION SWITCH CONNECTOR

6. CHECK PARK/NEUTRAL POSITION OPERATION

Check that the engine can be started with the shift lever only in the N or P position, but not in other positions.

If not as stated above, carry out the adjustment procedure (See page DI-219).

7. INSTALL ENGINE UNDER COVER

8. TEST DRIVE VEHICLE

TERMS

IN074-01

ABBREVIATIONS USED IN THIS MANUAL

Abbreviations	Meaning
ABS	Anti-Lock Brake System
ALR	Automatic Locking Retractor
APPROX.	Approximately
A/T, ATM	Automatic Transmission (Automatic Transaxle)
ATF	Automatic Transmission Fluid
BTDC	Before Top Dead Center
CALIF.	California
CB	Circuit Breaker
CD	Compact Disc
CRS	Child Restraint System
DOHC	Double Over Head Cam
DP	Dash Pot
D.R.L.	Daytime Running Light
ECU	Electronic Control Unit
ELR	Emergency Locking Retractor
ESA	Electronic Spark Advance
ETR	Electric Turning Radio
EX	Exhaust
FIPG	Formed in Place Gasket
FL	Fusible Link
FR, Fr	Front
H-Fuse	High Current Fuse
IG	Ignition
IN	Intake (Manifold, Valve)
I/P	Instrument Panel
J/B	Junction Block
LED	Light Emitting Diode
LH	Left-Hand
LSD	Limited Slip Differential
Max.	Maximum
Min.	Minimum
MP	Multipurpose
M/T	Manual Transmission (Manual Transaxle)
O/D, OD	Overdrive
O/S	Oversize
PCV	Positive Crankcase Ventilation
PS	Power Steering
R/B	Relay Block
RH	Right-Hand
RR, Rr	Rear
SRS	Supplemental Restraint System
SSM	Special Service Materials

SST	Special Service Tools
STD	Standard
SW	Switch
TEMP.	Temperature
T/M	Transmission
U/S	Undersize
VSV	Vacuum Switching Valve
w/	With
w/o	Without

BR0QX-06

COMPONENTS

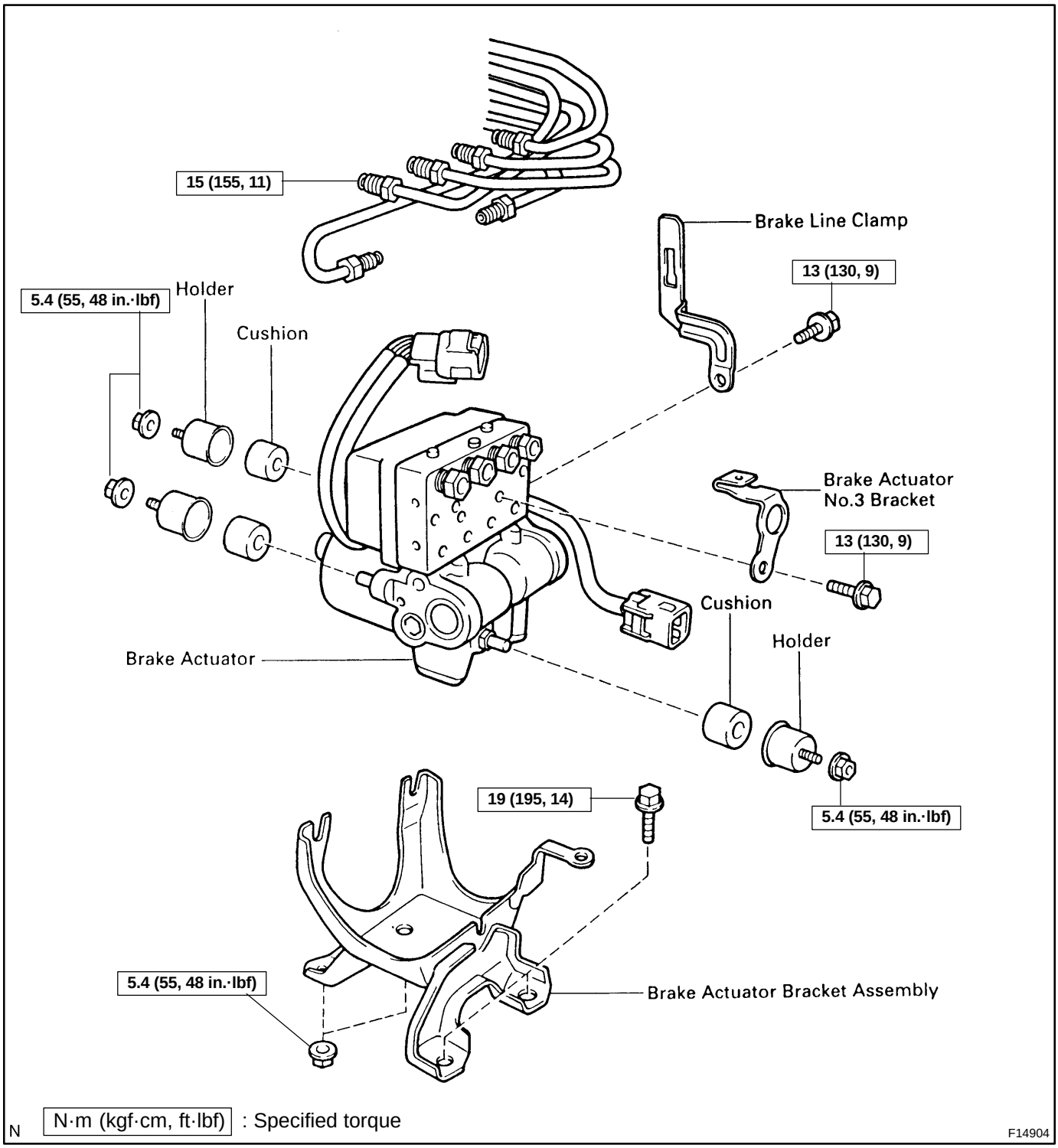

BR0QZ-01

INSTALLATION

Installation is in the reverse order of removal (See page BR-53).

1. **AFTER INSTALLATION, FILL BRAKE RESERVOIR WITH BRAKE FLUID AND BLEED BRAKE SYSTEM (See page BR-4)**
2. **CHECK FOR LEAKS**

ABS ACTUATOR

BR0QW-07

ON-VEHICLE INSPECTION

HINT:

Using the ABS actuator checker (SST), check the operation of the actuator. If the actuator does not operate, check the operation of sub-wire harness G according to the instructions on pages DI-316 and DI-319 . If the solenoid and/or pump motor relay are abnormal, replace the relay and inspect the actuator operation again.

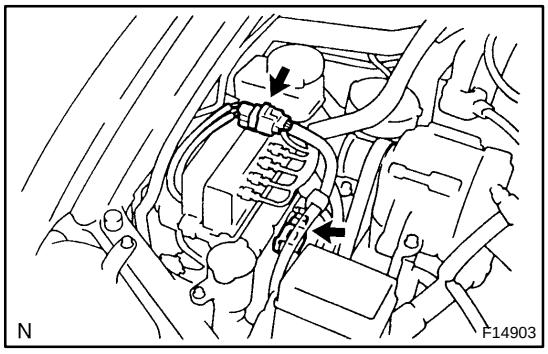

1. INSPECT BATTERY POSITIVE VOLTAGE

Battery positive voltage: 10 - 14 V

2. DISCONNECT CONNECTORS

Disconnect the 2 connectors from the actuator.

3. CONNECT ACTUATOR CHECKER (SST)

(a) Connect the actuator checker (SST) to the actuator side wire harness via the sub-wire harness (SST), as shown.

SST 09990- 00150, 09990- 00250, 09990- 00300, 09990-00360

(b) Connect the red cable of the checker to the battery positive (+) terminal and black cable to the negative (-) terminal. Connect the black cable of the sub-wire harness to the battery negative (-) terminal or body ground.

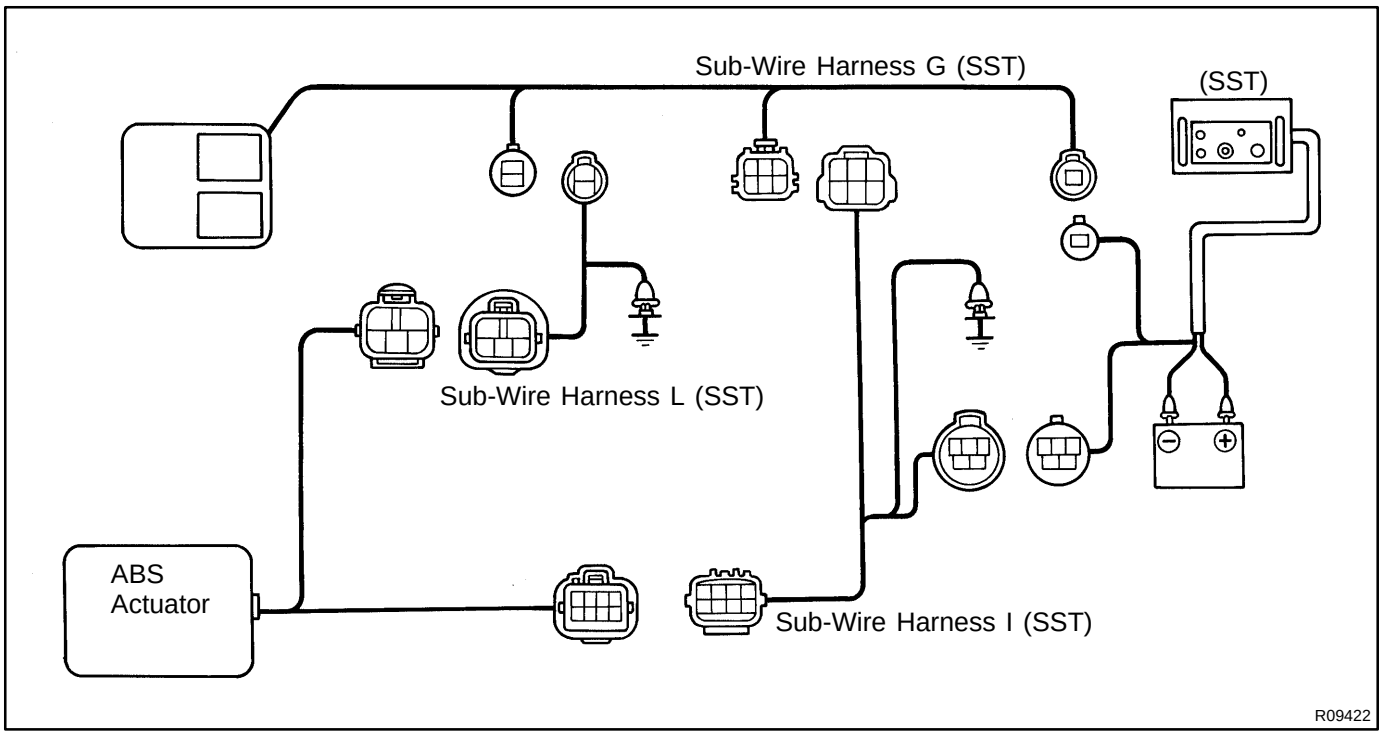

(c) Place the ”SHEET A” (SST) on the actuator checker.
SST 09990-00163

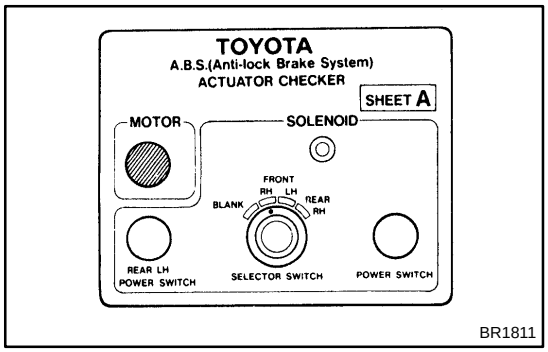

4. INSPECT BRAKE ACTUATOR OPERATION

(a) Start the engine, and run it at idle.

(b) Turn the selector switch of the actuator checker to ”FRONT RH” position.

(c) Push and hold in the MOTOR switch for a few seconds. Make sure that you can hear the motor run.

(d) Depress the brake pedal and hold it for about 15 seconds, and check that the pedal does not go down.

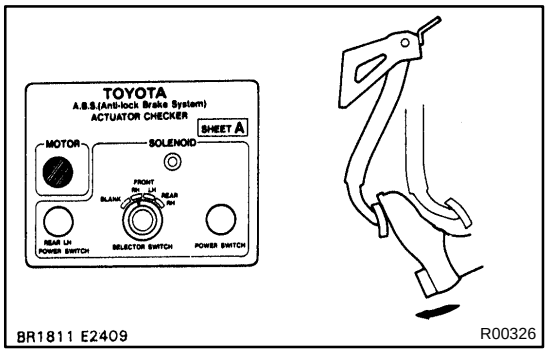

(e) With your foot still applied onto the brake pedal, push MOTOR switch and check that the brake pedal does not pulsate.

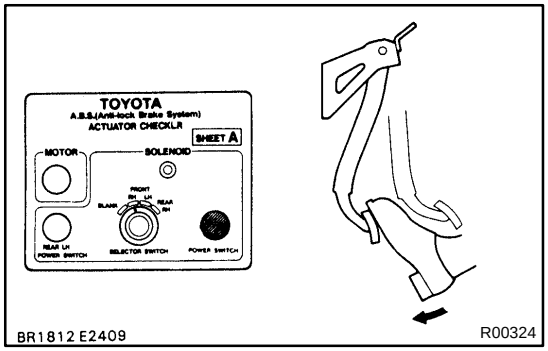

(f) Depress the brake pedal and hold it. As you hold the pedal down, push and hold in the POWER SWITCH for a few seconds. Check that the pedal does not go down.

NOTICE:

Do not keep the POWER SWITCH pushing more than 10 seconds.

(g) With your foot still applied onto the brake pedal, release the POWER SWITCH and check that the pedal goes down.

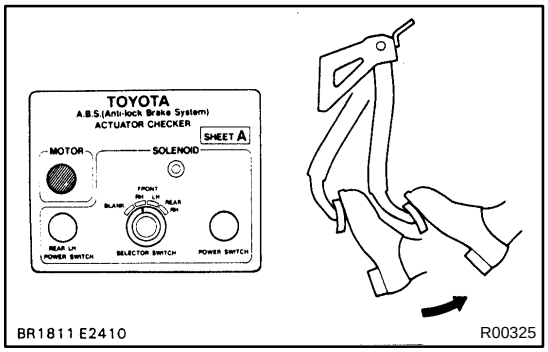

(h) With your foot still applied onto the brake pedal, push the MOTOR switch and check that the brake pedal returns.

(i) Release the brake pedal.

5. INSPECT FOR OTHER WHEELS

(a) Turn the selector switch to ”FRONT LH” position.

(b) Repeating (c) to (i) to the step 4, check the actuator operation similarly.

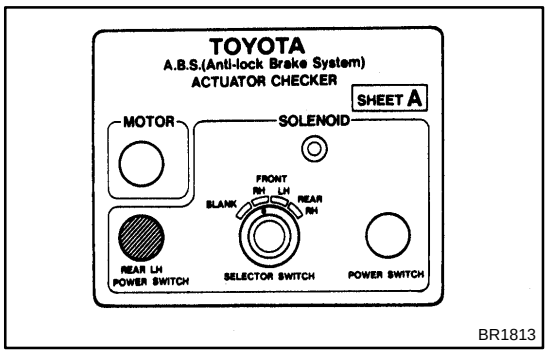

(c) Similarly, inspect "REAR RH" and "REAR LH" position.

HINT:

When inspecting the "REAR LH" position, push the REAR LH switch instead of the POWER SWITCH. This makes it possible to inspect wherever the selector switch position indicates.

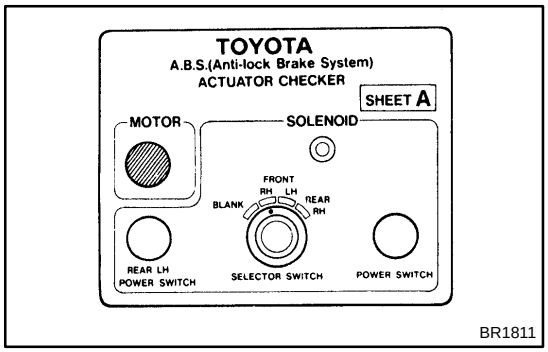

6. PUSH MOTOR SWITCH

(a) Push and hold in the MOTOR switch for a few seconds.

(b) Stop the engine.

7. DISCONNECT ACTUATOR CHECKER (SST) FROM ACTUATOR

(a) Disconnect the actuator checker (SST) and 3 sub-wire harness (SST) form the actuator.

SST 09990- 00150, 09990- 00163, 09990- 00250, 09990-00300, 09990-00360

(b) Connect the actuator connectors.

(c) Clear the DTC (See page DI-308).

BR0QY-02

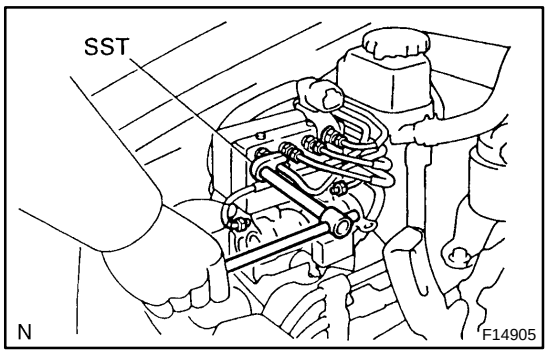

REMOVAL

1. DISCONNECT BRAKE LINES

Using SST, disconnect the brake lines from the ABS actuator.

SST 09023-00100

Torque: 15 N·m (155 kgf·cm, 11 ft·lbf)

2. DISCONNECT 2 CONNECTORS

3. REMOVE ABS ACTUATOR

(a) Remove the 2 blots, nuts and ABS actuator assembly.
Torque: 19 N·m (195 kgf·cm, 14 ft·lbf)

(b) Remove the bolt and brake line clamp.
Torque: 13 N·m (130 kgf·cm, 9 ft·lbf)

(c) Remove the bolt and No. 3 bracket.
Torque: 13 N·m (130 kgf·cm, 9 ft·lbf)

(d) Remove the 3 nuts and ABS actuator from the actuator bracket assembly.
Torque: 5.4 N·m (55 kgf·cm, 48 in.·lbf)

(e) Remove the 3 cushions and holders from the ABS actuator.

BO1DQ-03

ADJUSTMENT

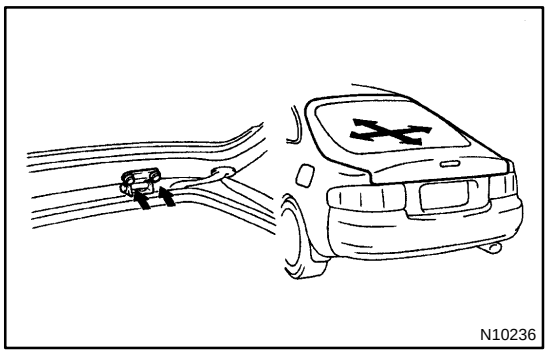

1. ADJUST DOOR IN HORIZONTAL DIRECTION

(a) Adjust the door by loosening the back door side hinge bolts.

(b) Tighten the loosened bolts again.
Torque: 14 N·m (145 kgf·cm, 11 ft·lbf)

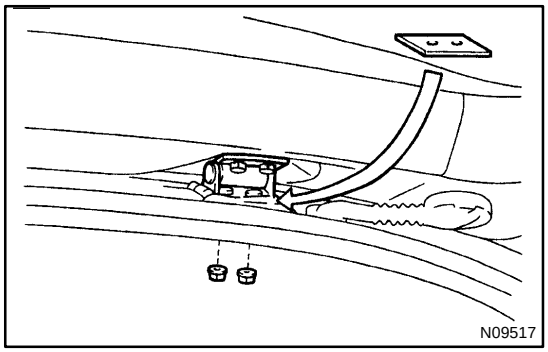

2. ADJUST DOOR IN VERTICAL DIRECTION

(a) Remove the roof headlining.
(See page BO-1 12)

(b) Loosen the body side hinge nuts and adjust the door by increasing or decreasing the number of the shims.

(c) Tighten the loosened bolts again.
Torque: 21 N·m (205 kgf·cm, 15 ft·lbf)

(d) Install the roof headlining.
(See page BO-1 14)

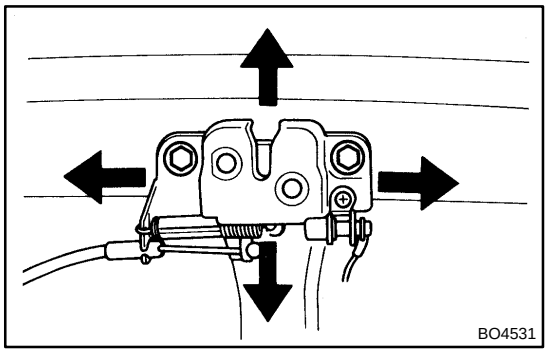

3. ADJUST DOOR LOCK

(a) Remove the deck trim rear cover.

(b) Adjust the lock position by slightly loosening the lock mounting bolts and hitting the lock with a hammer and brass bar.

CAUTION:
Do not tap the lock too hard.

(c) Tighten the loosened bolts again.
Torque: 19 N·m (195 kgf·cm, 14 ft·lbf)

(d) Install the deck trim rear cover.

BO1DM-05

ADJUSTMENT

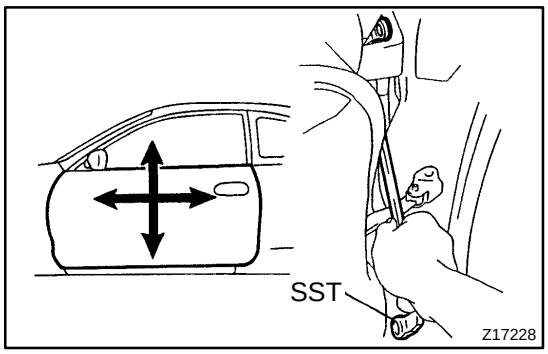

1. ADJUST FRONT DOOR IN FORWARD/REARWARD AND VERTICAL DIRECTIONS

(a) Using SST, adjust the door by loosening the body side hinge bolts.
SST 09812-00010

(b) Using SST, tighten the loosened bolts again.
SST 09812-00010
Torque: 28 N·m (290 kgf·cm, 21 ft·lbf)

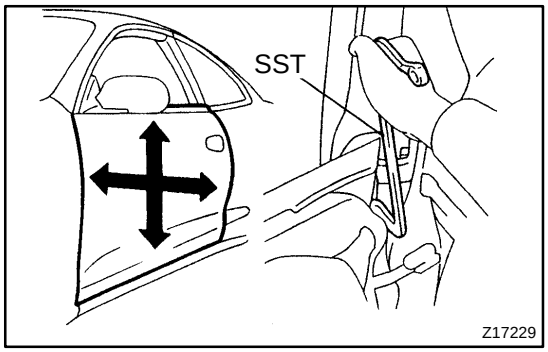

2. ADJUST FRONT DOOR IN LEFT/RIGHT AND VERTICAL DIRECTIONS

(a) Using SST, adjust the door by loosening the door side hinge bolts.
SST 09812-00010

(b) Using SST, tighten the loosened bolts again.
SST 09812-00010
Torque: 28 N·m (290 kgf·cm, 21 ft·lbf)

HINT:
Substitute the standard bolt for the centering bolt.
(See page BO-6)

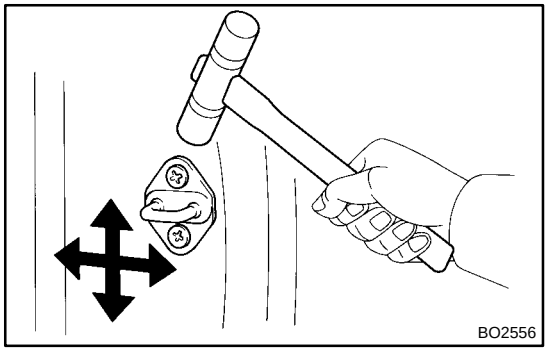

3. ADJUST FRONT DOOR LOCK STRIKER

(a) Check that the door fit and door lock linkages are adjusted correctly.

(b) Loosen the striker mounting screws.

(c) Using a plastic hammer, tap the striker to adjust it.

CAUTION:
Do not tap the striker too hard.

(d) Tighten the loosened screws again.
Torque: 26 N·m (260 kgf·cm, 19 ft·lbf)

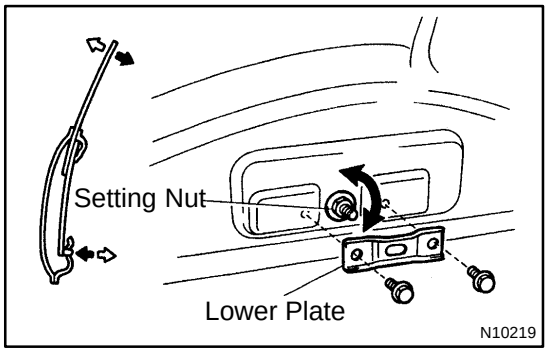

4. ADJUST FRONT DOOR GLASS

(a) Adjust the upper part of the glass to the inside/outside.
(1) Remove the 2 lower plate bolts and lower plate.
(2) Adjust the glass by turning the setting nut.
(3) Reinstall the lower plate and 2 bolts.
Torque: 7.8 N·m (80 kgf·cm, 69 in.·lbf)

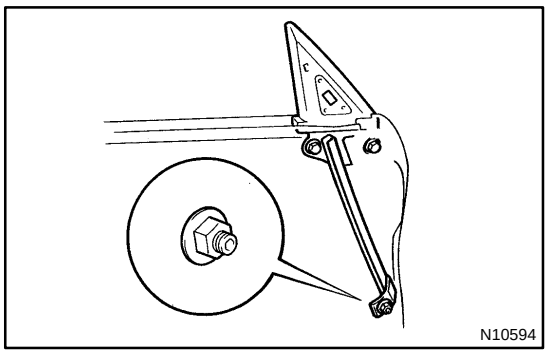

(4) In case the glass does not fit in the mirror bracket:
- Loosen the lower nut of the mirror bracket.
- Using a hexagon wrench, adjust the mirror bracket to in/out direction by turning the stud bolt.

Torque: 7.8 N·m (80 kgf·cm, 69 in.·lbf)

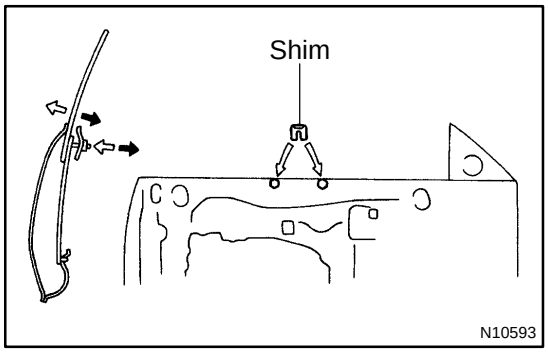

(b) Adjust the lower part of the glass to the inside /outside.
(1) Loosen the 2 nuts for the window regulator.
(2) Using a shim, adjust the glass to in/out direction.

Shim thickness:
1.0 mm (0.039 in.)
2.0 mm (0.079 in.)

(3) Tighten the loosened nuts again.

Torque: 5.4 N·m (55 kgf·cm, 48 in.·lbf)

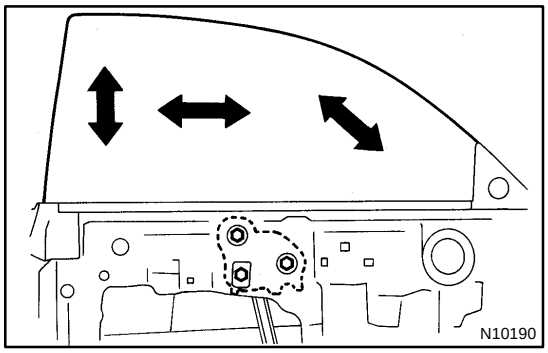

(c) Adjust the glass in position (forward/rearward) and attitude.
(1) Loosen the 3 bolts of the carrier plate and adjust the glass.
(2) Tighten the loosened bolts again.

Torque: 7.8 N·m (80 kgf·cm, 69 in.·lbf)

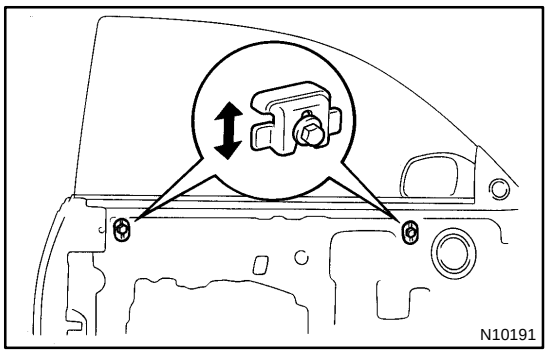

(d) Adjust the glass in position (vertical) and attitude (when glass fully closed).
Adjust the door window upper stops.

Torque: 5.4 N·m (55 kgf·cm, 48 in.·lbf)

BO1DW-06

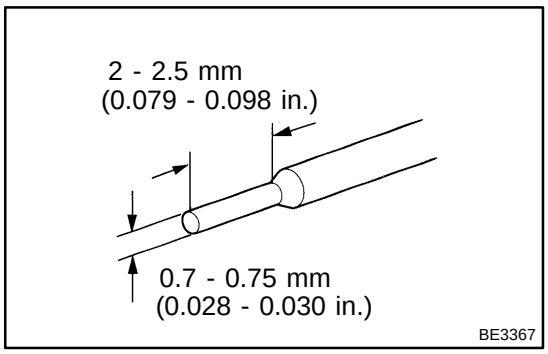

ADJUSTMENT

ADJUST FRONT WASHER NOZZLE

Using a tool like the one shown in the illustration, change the direction of the nozzle hole to adjust the point where washer fluid hits the windshield.

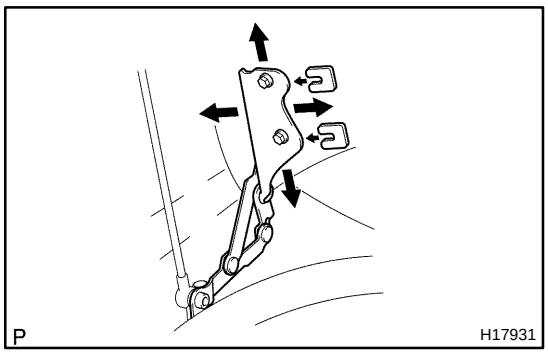

LUGGAGE COMPARTMENT DOOR

BO49N-01

ADJUSTMENT

1. ADJUST DOOR IN HORIZONTAL DIRECTION

Adjust the door by loosening the door side hinge bolts.

2. ADJUST DOOR IN VERTICAL DIRECTION

Adjust the door by increasing o decreasing the number of the shims.

Torque: 19 N·m (55 kgf·cm, 14 ft·lbf)

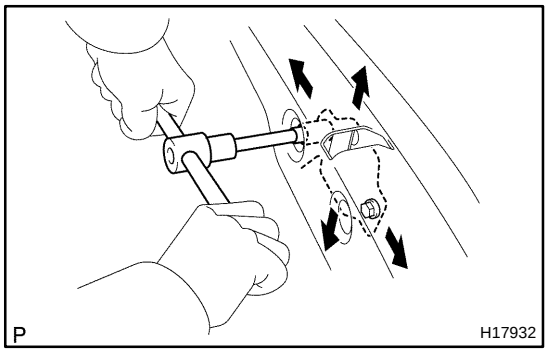

3. ADJUST LOCK

Adjust the lock position by slightly loosening the mounting bolts, and hitting the lock with a hammer and brass bar.

Torque: 5.4 N·m (55 kgf·cm, 48 in.·lbf)

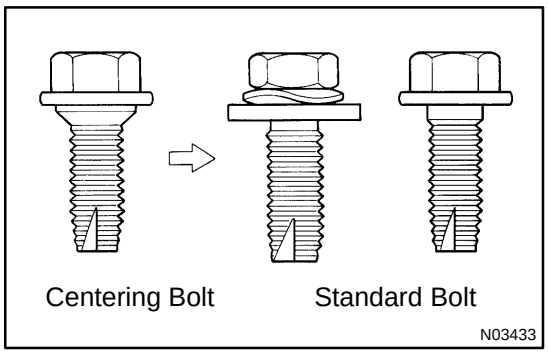

HOOD

ADJUSTMENT

BO1DI-03

HINT:

Since the centering bolt is used as the hood hinge set bolt, the hood cannot be adjusted with it on. Substitute the standard bolt for the centering bolt.

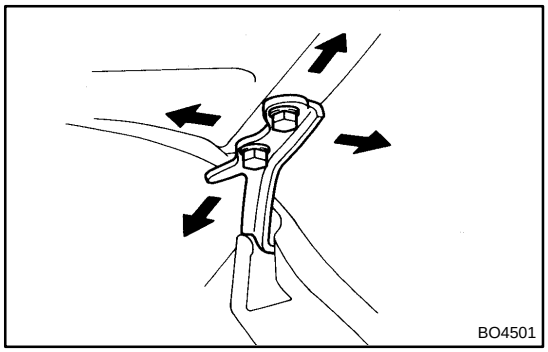

1. ADJUST HOOD IN HORIZONTAL DIRECTION

(a) Adjust the hood by loosening the hood side hinge bolts.

(b) Tighten the loosened bolts again.

Torque: 13 N·m (130 kgf·cm, 9 ft·lbf)

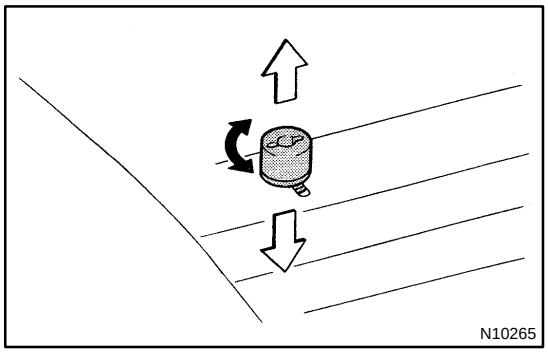

2. ADJUST FRONT EDGE OF HOOD IN VERTICAL DIRECTION

Adjust the hood by turning the cushions.

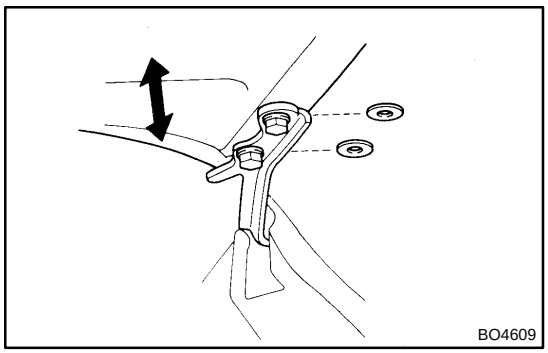

3. ADJUST REAR EDGE OF HOOD IN VERTICAL DIRECTION

Adjust the hood by increasing or decreasing the number of the washers.

Torque: 13 N·m (130 kgf·cm, 9 ft·lbf)

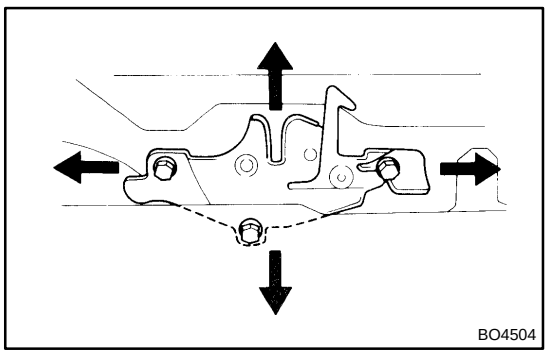

4. ADJUST HOOD LOCK

(a) Adjust the lock by loosening the bolts.

(b) Tighten the loosened bolts again.

Torque: 7.8 N·m (80 kgf·cm, 69 in.·lbf)

BO1E1-03

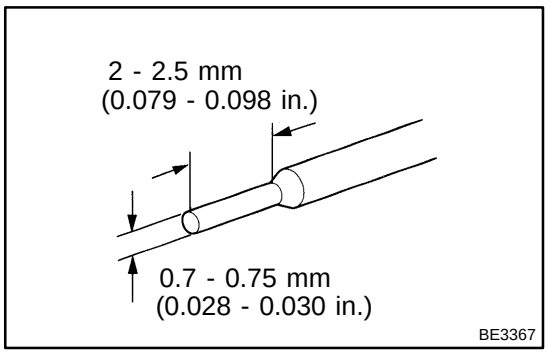

ADJUSTMENT

ADJUST REAR WASHER NOZZLE

Using a tool like the one shown in the illustration, change the direction of the nozzle hole to adjust the point where washer fluid hits the back door glass.

BE26Y-01

REPLACEMENT

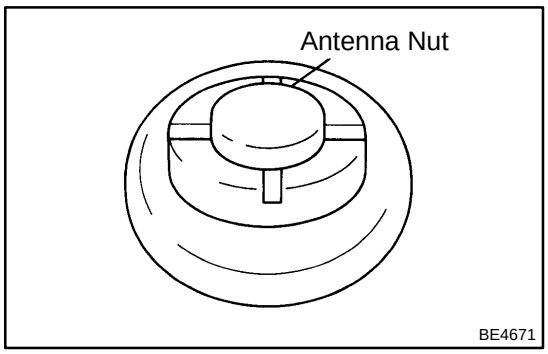

1. Auto Antenna Models:
REMOVE ANTENNA ROD

HINT:

Do this operation with the battery negative (-) cable connected to the battery terminal.

(a) Turn the ignition switch to ”LOCK” position.

(b) Remove the antenna nut.

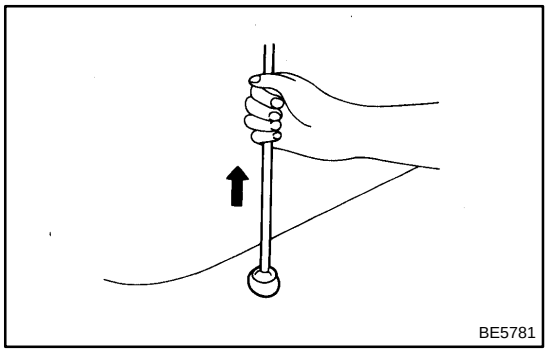

(c) Press the ”AM, FM” buttons on the radio receiver, and simultaneously turn the ignition switch to ”ACC” position.

HINT:

- The rod will be extended fully and be released form the motor antenna.
- After removing the antenna rod, leave the ignition switch ”ACC”.

NOTICE:

To prevent body damage when the antenna rod is released, hold the rod while it comes out.

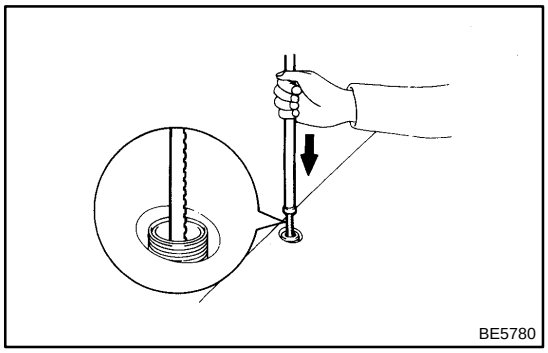

2. Auto Antenna Models:
INSTALL ANTENNA ROD

(a) Insert the cable of the rod until it reaches the bottom.

HINT:

- When inserting the cable, the teeth on the cable must face toward the rear of the vehicle.
- Insert the antenna by approx. 300 mm (11.8 in.).

(b) Wind the cable to retract the rod by turning the ignition switch to ”LOCK” position.

HINT:

- If the ignition switch is already in ”LOCK” position, do step 1 (c) first, then turn the ignition switch to ”ACC” position.
- In case the cable is not wound, twist it, as shown in the illustration.
- Even if the rod has not retracted fully, install the antenna nut and inspect the antenna rod operation. It will finally retract fully.

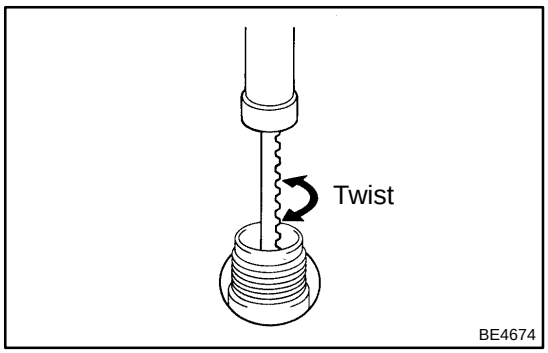

(c) Inspect the antenna rod operation by pushing the radio wave band select buttons.

DI53P-02

DTC	31, 32, 33, 34	Speed Sensor Circuit

CIRCUIT DESCRIPTION

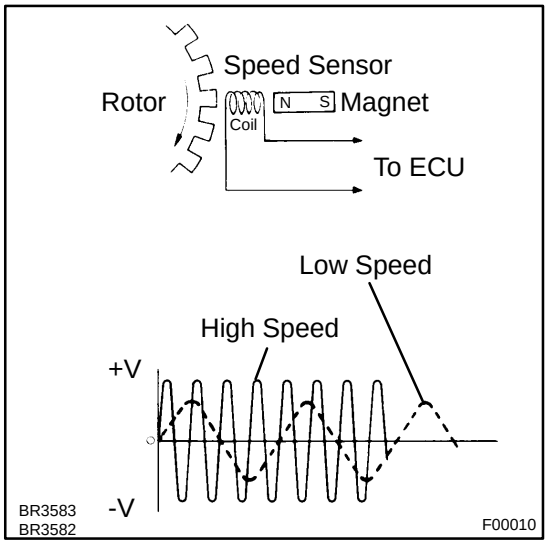

The speed sensor detects the wheel speed and sends the appropriate signals to the ECU. These signals are used to control the ABS system. The front and rear rotors each have 48 serrations.

When the rotors rotate, the magnetic field emitted by the permanent magnet in the speed sensor generates an AC voltage. Since the frequency of this AC voltage changes in direct proportion to the speed of the rotor, the frequency is used by the ECU to detect the speed of each wheel.

DTC No.	DTC Detecting Condition	Trouble Area
31, 32, 33, 34	Detection of any of conditions (1) through (3): (1) At vehicle speed of 10 km/h (6 mph) or more, pulses are not input for 5 sec. (2) Momentary interruption of the speed sensor signal occurs at least 7 times in the time between switching the ignition switch ON and switching it OFF. (3) Abnormal fluctuation of speed sensor signals with the vehicle speed 20 km/h (12 mph) or more.	• Right front, left front, right rear, left rear speed sensor • Open or short in each speed sensor circuit • Sensor rotor

HINT:

DTC No. 31 is for the right front speed sensor.

DTC No. 32 is for the left front speed sensor.

DTC No. 33 is for the right rear speed sensor.

DTC No. 34 is for the left rear speed sensor.

Fail safe function:

If trouble occurs in the speed sensor circuit, the ECU cuts off current to the ABS solenoid relay and prohibits ABS control.

WIRING DIAGRAM

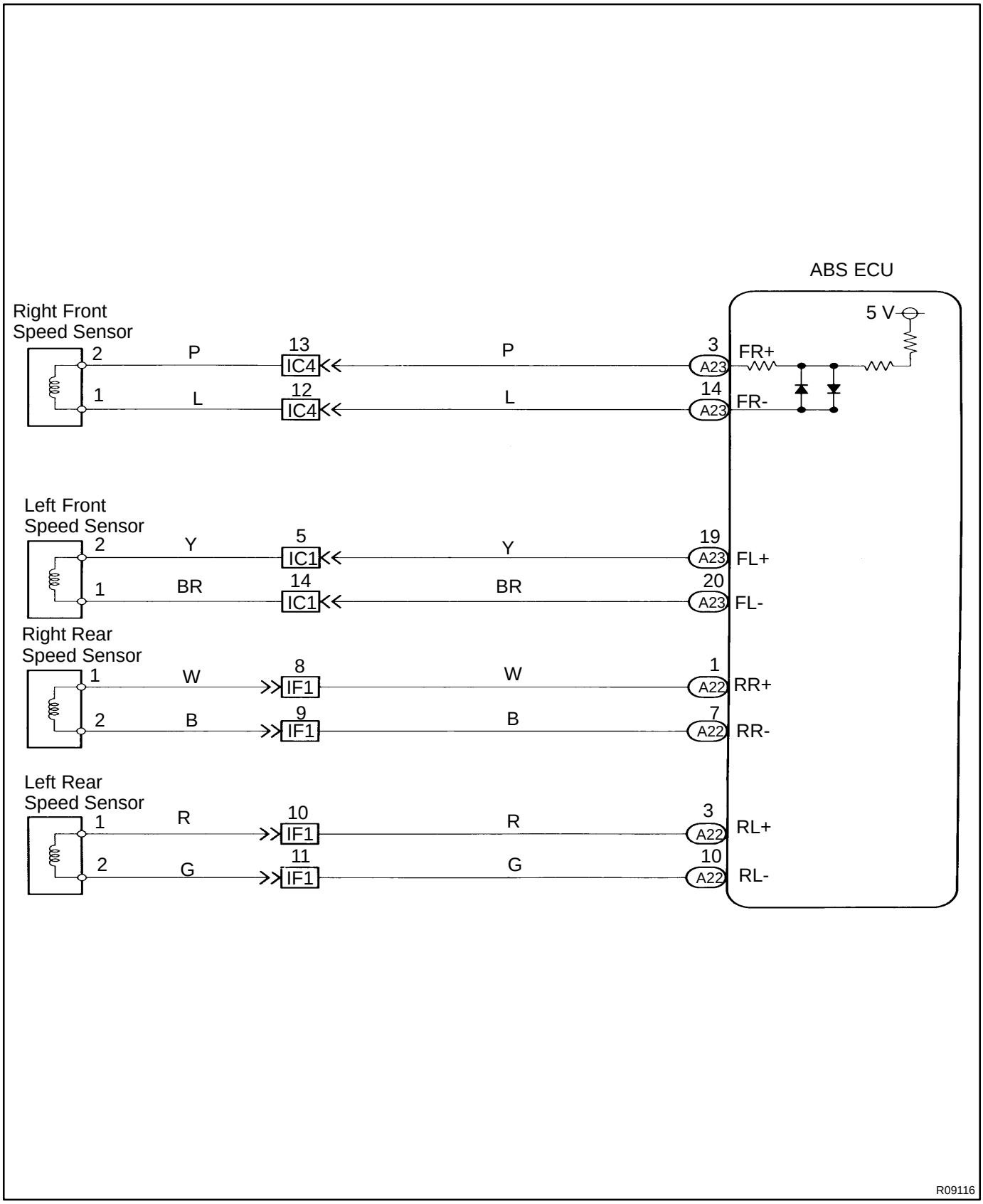

INSPECTION PROCEDURE

1	**Check speed sensor.**

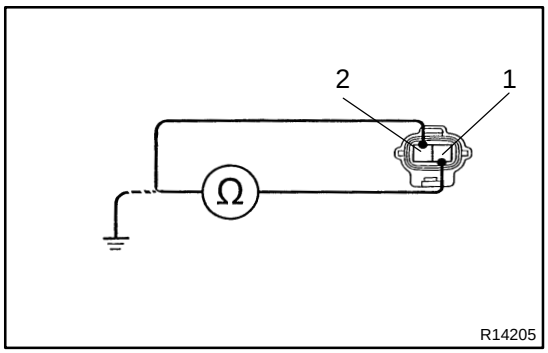

Front

PREPARATION:

(a) Remove front fender liner.

(b) Disconnect speed sensor connector.

CHECK:

Measure resistance between terminals 1 and 2 of speed sensor connector.

OK:

Resistance: 1.0 - 2.6 kΩ

CHECK:

Measure resistance between terminals 1 and 2 of speed sensor connector and body ground.

OK:

Resistance: 1 MΩ or higher

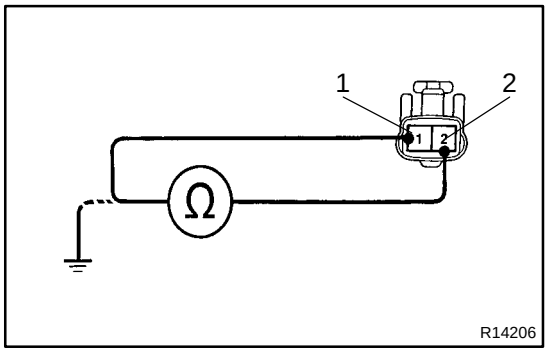

Rear

PREPARATION:

(a) Remove the deck side trim.

(b) Disconnect speed sensor connector.

CHECK:

Measure resistance between terminals 1 and 2 of speed sensor connector.

OK:

Resistance: 0.8 - 2.1 kΩ

CHECK:

Measure resistance between terminals 1 and 2 of speed sensor connector and body ground.

OK:

Resistance: 1 MΩ or higher

NG → **Replace speed sensor.**

NOTICE:

Check the speed sensor signal last (See page DI-308).

OK

2	**Check for open and short in harness and connector between each speed sensor and ECU (See page IN-28).**

NG → **Repair or replace harness or connector.**

NOTICE:
Check the speed sensor signal last (See page DI-308).

OK

3	**Check sensor rotor and sensor installation.**

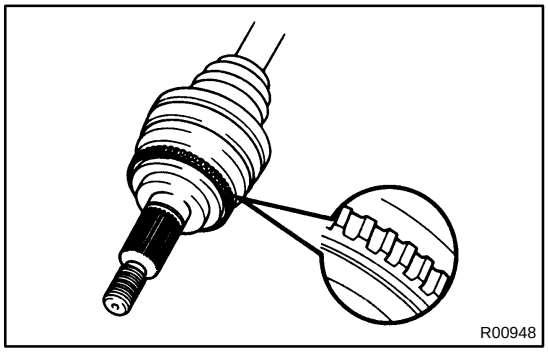

Front

PREPARATION:
Remove the drive shaft (See page SA-18 or SA-26).

CHECK:
Check sensor rotor serrations.

OK:
No scratches or missing teeth or foreign objects.

CHECK:
Check the sensor tip.

OK:
No scratches or foreign objects on the sensor tip.

CHECK:
Check the front speed sensor installation.

OK:
This installation bolt is tightened properly and there is no clearance between the sensor and steering knuckle.

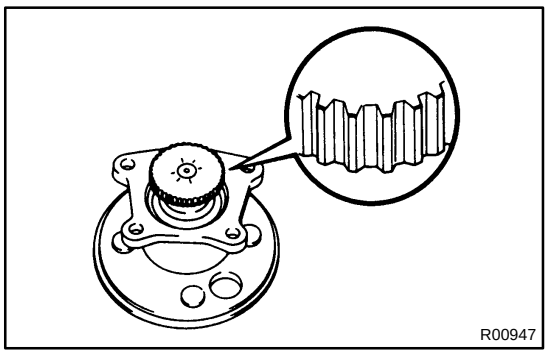

Rear

PREPARATION:
Remove the axle hub (See page SA-55).

CHECK:
Check the sensor rotor serrations.

OK:
No scratches or missing teeth or foreign objects.

CHECK:
Check the sensor tip.

OK:
No scratches or foreign objects on the sensor tip.

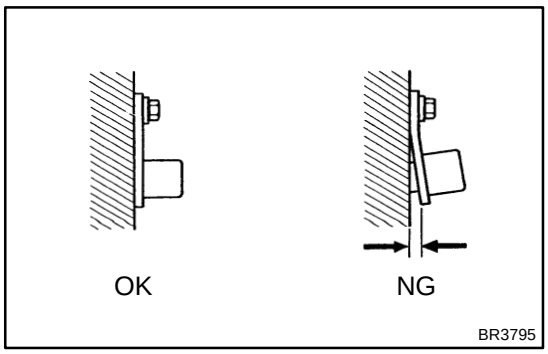

CHECK:

Check the front speed sensor installation.

OK:

This installation bolt is tightened properly and there is no clearance between the sensor and rear axle knuckle.

NG → **Replace speed sensor or rotor.**

NOTICE:

Check the speed sensor signal last (See page DI-308).

OK

Check and replace ABS ECU.

DI53Q-02

DTC	41	IG Power Source Circuit

CIRCUIT DESCRIPTION

This is the power source for the ECU, hence the CPU and actuators.

DTC No.	DTC Detecting Condition	Trouble Area
41	Vehicle speed is 3 km/h (1.9 mph) or more and voltage of ECU terminal IG1 remains at below 9.5 V for more than 10 sec.	• Battery • IC regulator • Open or short in power source circuit

Fail safe function:

If trouble occurs in the power source circuit, the ECU cuts off current to the ABS solenoid relay and prohibits ABS control.

WIRING DIAGRAM

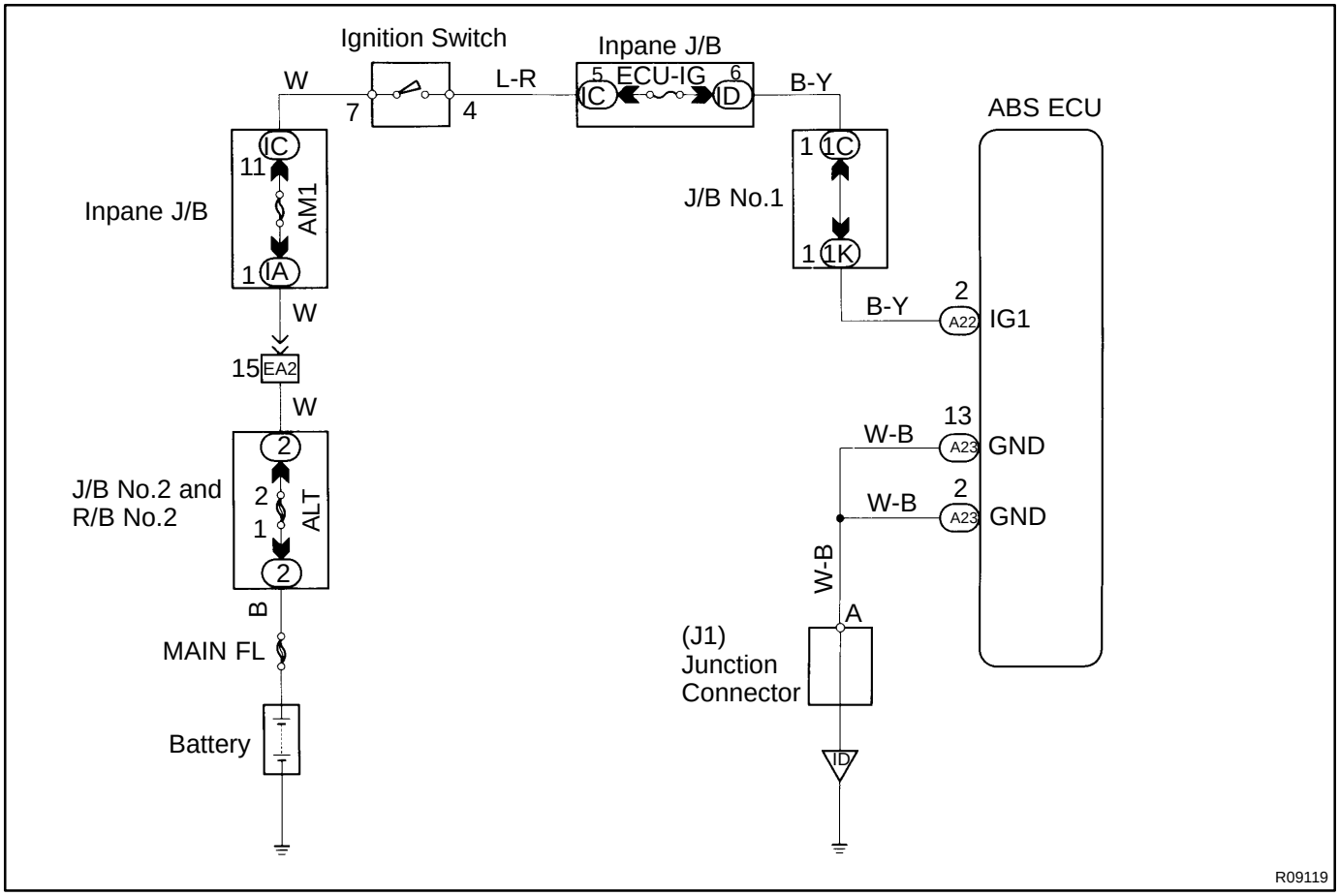

INSPECTION PROCEDURE

1	**Check battery positive voltage.**

OK:

Voltage: 10 - 14 V

NG → **Check and repair the charging system.**

OK

2	**Check voltage between terminals IG1 and GND of ABS ECU connector.**

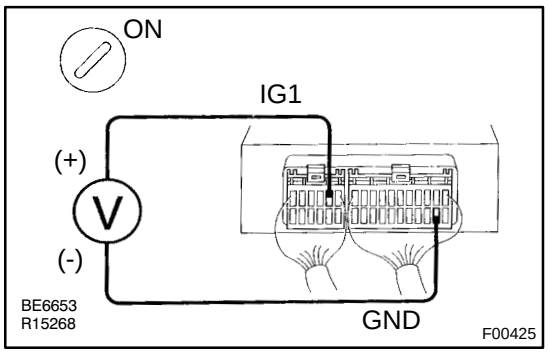

PREPARATION:

Remove ABS ECU with connectors still connected.

CHECK:

(a) Turn ignition switch ON.

(b) Measure voltage between terminals IG1 and GND of ABS ECU connector.

OK:

Voltage: 10 - 14 V

OK → **Check and replace ABS ECU.**

NG

3	**Check continuity between terminal GND of ECU connector and body ground.**

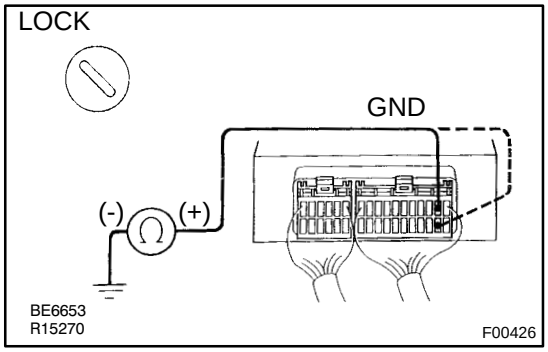

CHECK:

Measure resistance between terminal GND of ABS ECU connector and body ground.

OK:

Resistance: 1 Ω or less

NG → **Repair or replace harness or connector.**

OK

4	Check ECU-IG fuse.

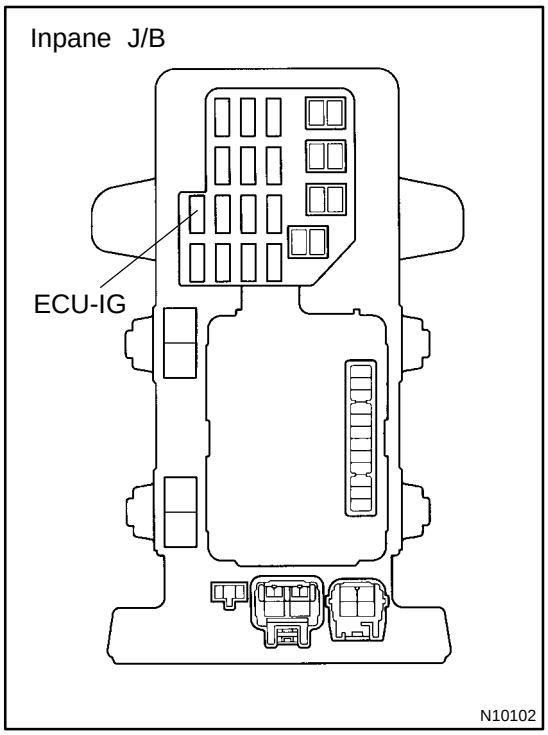

PREPARATION:
Remove ECU-IG fuse from inpane J/B.
CHECK:
Check continuity of ECU-IG fuse.
OK:
Continuity

NG → **Check for short in all the harness and components connected to ECU-IG fuse (See attached wiring diagram).**

OK

Check for open in harness and connector between ABS ECU and battery (See page IN-28).

DI53R-02

DTC	51	ABS Pump Motor Lock

CIRCUIT DESCRIPTION

DTC No.	DTC Detecting Condition	Trouble Area
51	Pump motor is not operating normally during initial check.	• ABS pump motor

Fail safe function:
If trouble occurs in the ABS pump motor, the ECU cuts off current to the ABS solenoid relay and prohibits ABS control.

WIRING DIAGRAM

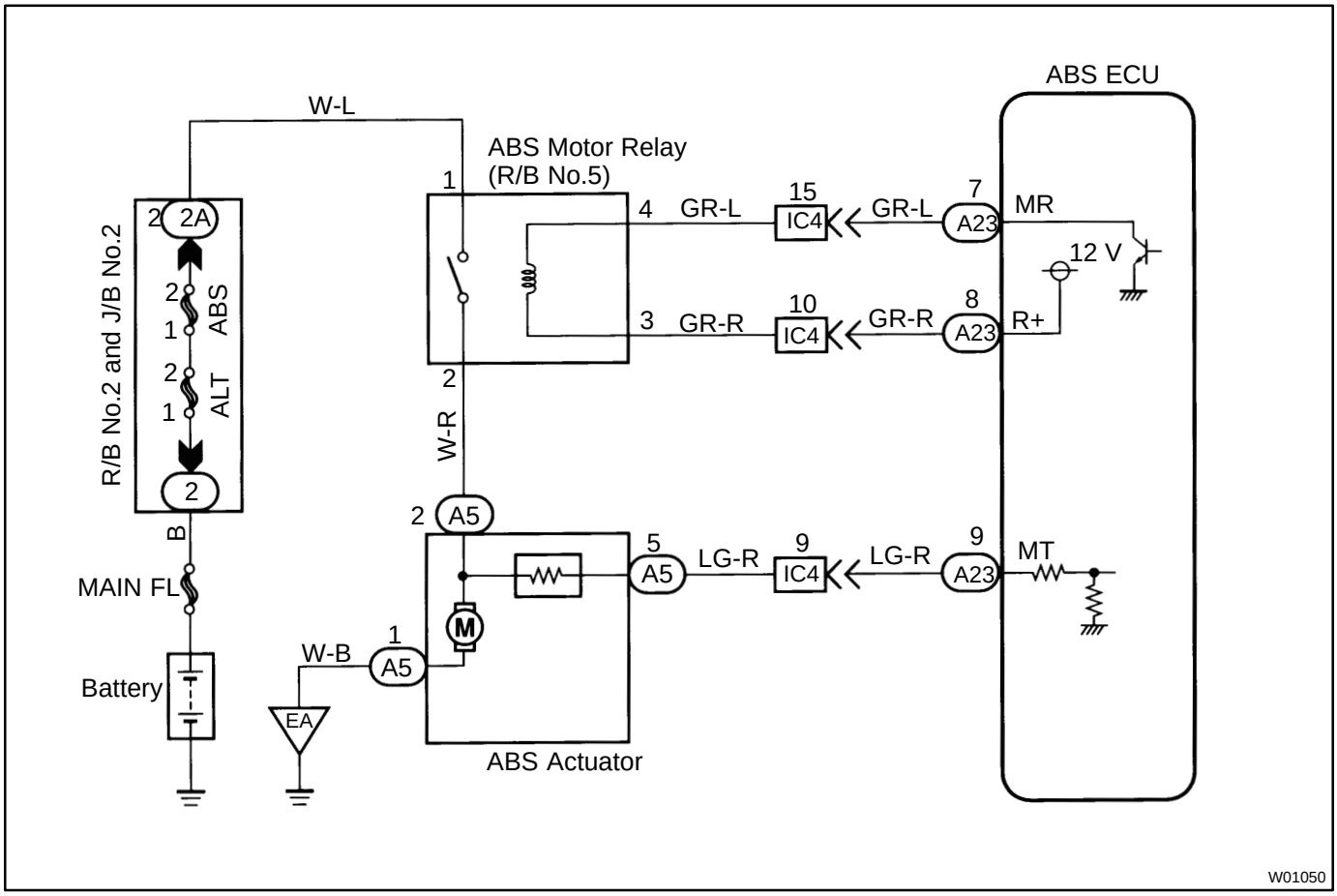

DI53G-01

CUSTOMER PROBLEM ANALYSIS CHECK

ABS Check Sheet

Inspector's Name :

Customer's Name		**Registration No.**	
		Registration Year	/ /
		Frame No.	
Date Vehicle Brought In	/ /	**Odometer Reading**	km miles

Date Problem First Occurred	/ /
Frequency Problem Occurs	☐ Continuous ☐ Intermittent (times a day)

Symptoms	☐ ABS does not operate.	
	☐ ABS does not operate efficiently.	
	ABS Warning Light Abnormal	☐ Remains ON ☐ Does not Light Up

DTC Check	**1st Time**	☐ Normal Code ☐ Malfunction Code (Code)
	2nd Time	☐ Normal Code ☐ Malfunction Code (Code)

ANTI-LOCK BRAKE SYSTEM

HOW TO PROCEED WITH TROUBLESHOOTING

DI53F-02

Troubleshooting in accordance with the procedure on the following pages.

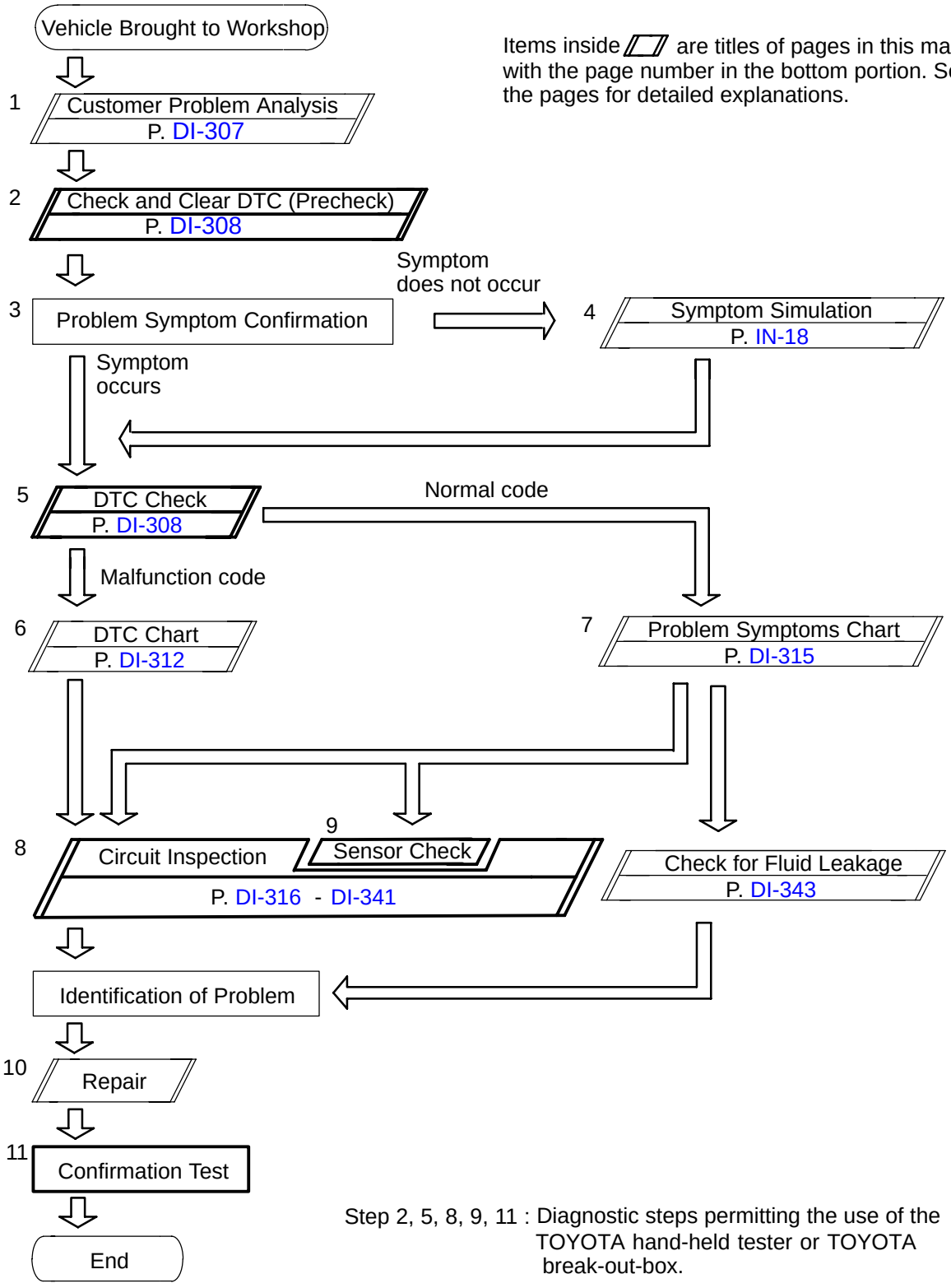

Items inside ▱ are titles of pages in this manual, with the page number in the bottom portion. See the pages for detailed explanations.

Step 2, 5, 8, 9, 11 : Diagnostic steps permitting the use of the TOYOTA hand-held tester or TOYOTA break-out-box.

AUDIO SYSTEM

DESCRIPTION

BE26X-01

1. RADIO WAVE BAND

The radio wave bands used in radio broadcasting are as follows:

Frequency	30 kHz	300 kHz	3 MHz	30 MHz	300 MHz
Designation	LF	MF	HF	VHF	
Radio wave		AM		FM	
Modulation method	Amplitude modulation			Frequency modulation	

LF: Low frequency MF: Medium Frequency HF: High Frequency VHF: Very High Frequency

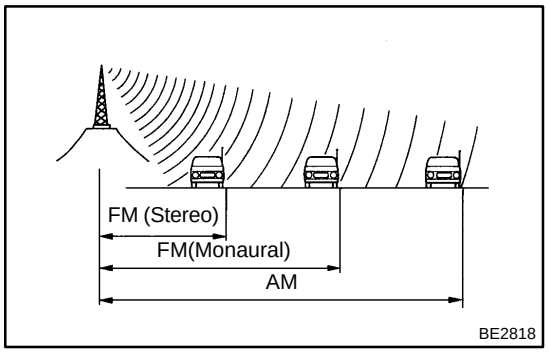

2. SERVICE AREA

There are great differences in the size of the service area for AM, FM monaural, and FM stereo broadcasts cannot be received even though AM comes in very clearly.
Not only does FM stereo have the smallest service area, but it also picks up static and other types of interference (”noise”) easily.

3. RECEPTION PROBLEMS

Besides the problem of static, there are also the problems called ”fading”, ”multipath” and ”fade out”. These problems are caused not by electrical noise but by the nature of the radio waves themselves.

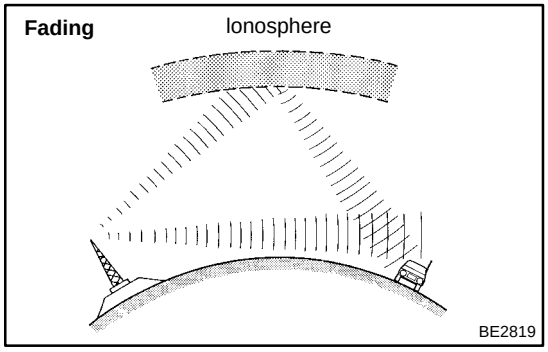

(1) Fading:
Besides electrical interference, AM broadcasts are also susceptible to other types of interference, especially at night. This is because AM radio waves bounce off the ionosphere at night. These radio waves then interfere with the signals from the same transmitter that reach the vehicle’s antenna directly. This type of interference is called ”fading”.

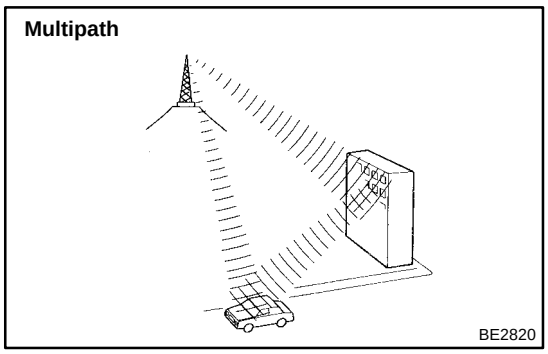

(2) Multipath:
One type of interference caused by bouncing of radio waves off of obstructions is called ”multipath”. Multipath occurs when a signal from the broadcast transmitter antenna bounces off buildings and mountains and interferes with the signal that is received directly.

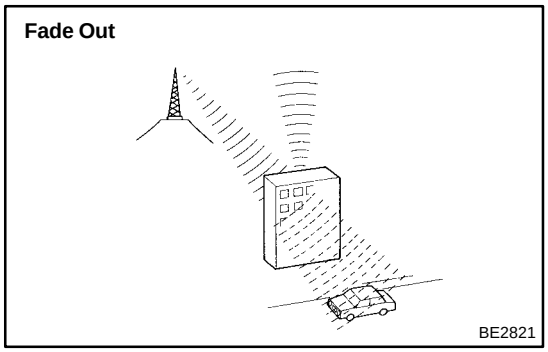

(3) Fade Out:
Because FM radio waves are of higher frequencies than AM radio waves, they bounce off buildings, mountains, and other obstructions. For this reason, FM signals often seem to gradually disappear or fade away as the vehicle goes behind a building or other obstruction. This is called ”fade out”.

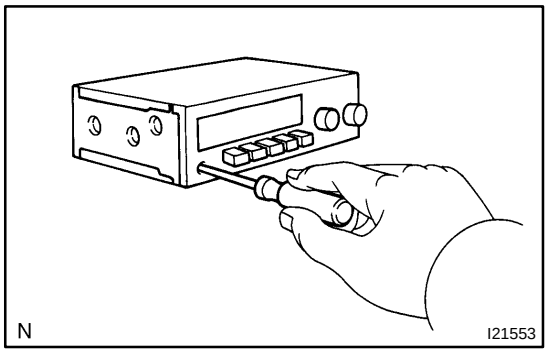

4. Except Electronic Tuning Radio:
ADJUST ATENNA TRINNER

(a) Fully lengthen antenna.
(b) With volume and tone at maximum, turn the dial to around 1,400 kHz where there is no reception,
(c) Adjust the trimmer to where static is loudest.

HINT:
The position of the antenna trimmer may vary according to the type of radio, but is always on the front side.

5. COMPACT DISC PLAYER

Compact Disc (hereafter called ”CD”) Players use a laser beam pick - up to read the digital signals recorded on the CD and reproduce analog signals of the music, etc. There are 4.7 in. (12 cm) and 3.2 in. (8 cm) CDs available.

HINT:
Never attempt to disaasemble or oil any part of the player unit. Do not insert any object other than a CD into the slot.

NOTICE:
CD players use an invisible laser beam which could cause hazardous radiation exposure if directed. Be sure to operate the player correctly as instructed.

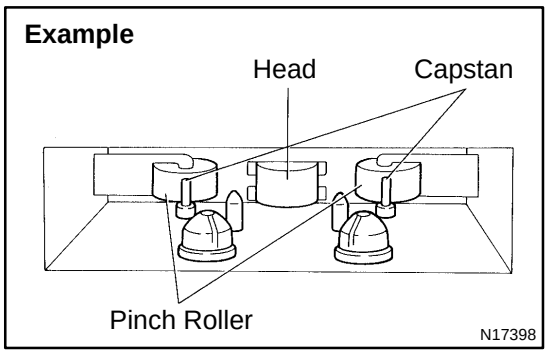

6. Tape Player/Head Cleaning:
MAINTENANCE

(a) Raise the cassette door with your finger.
Then, using a pencil or like, push in the guide.

(b) Using a cleaning pen or cotton applicator soaked in cleaner, clean the head surface, punch rollers and capstans.

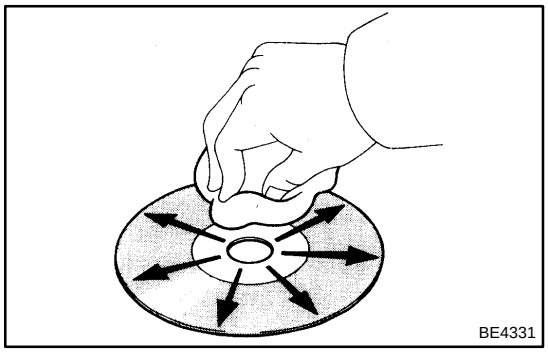

7. CD Player/CD Cleaning

If the CD gets dirty, clean the CD by wiping the surfaces from the center to outside in the radial directions with a soft cloth.

NOTICE:

Do not use a conventional record cleaner or antistatic record preservative.

HOW TO USE DIAGNOSTIC CHART

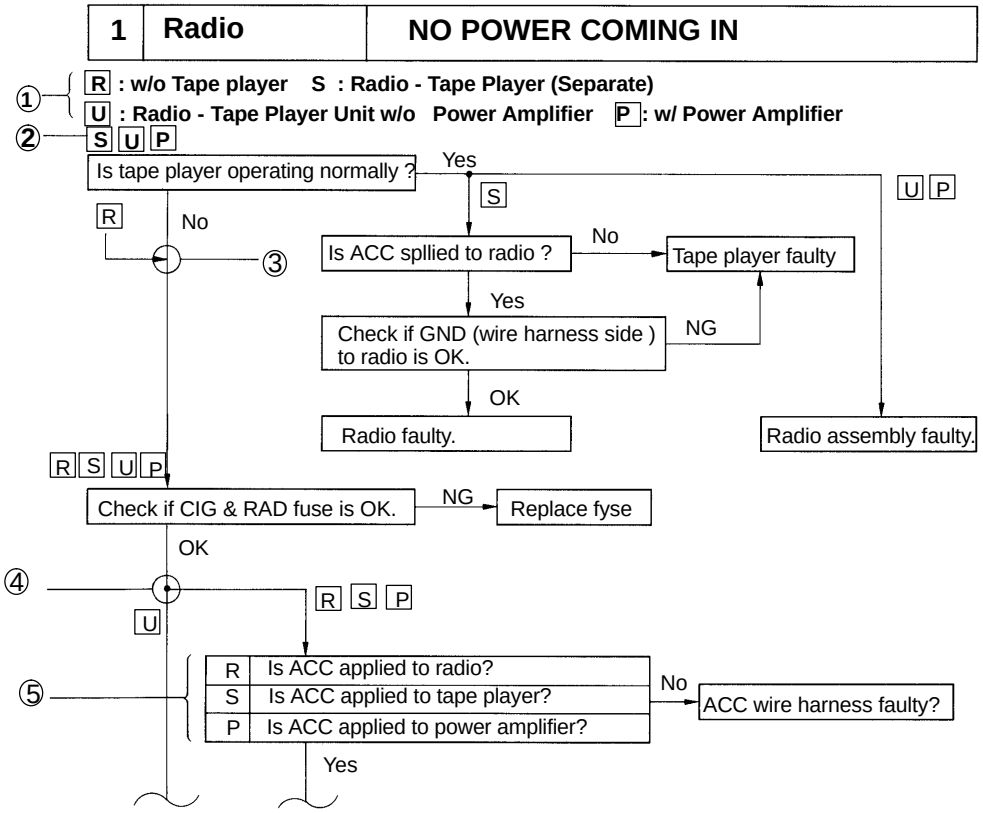

① Audio system type and symbol used.
HINT: Confirm the applicable type of audio system.

② Symbol for type of audio system the question applies to.
HINT: If the audio system type is not applicable, proceed to next question below.

③ Junction without black circle
HINT: Proceed to next question below.

④ Junction with black circle
HINT: Proceed to question for applicable audio system type.

⑤ HINT: Select question for applicable audio system type.

V01743

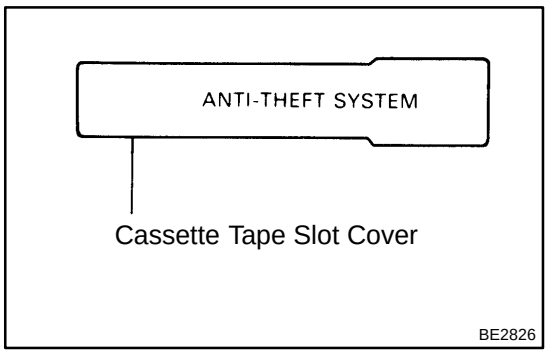

8. ANTI-THEFT SYSTEM

The anti- theft system is only provided for audio system equipped with an Acoustis Flavor function.

HINT:

The words ”ANTI-THEFT SYSTEM” are displayed on the cassette tape slot cover.

For operation instructions for the anti-theft system, please consult the audio system section in the Owner’s Manual.

9. SETTING SYSTEM

The system is in on operation once the customer has pushed the required buttons and entered the customer - selected 3 - digit ID number. (Refer to the Owner’s Manual, ”SETTING THE ANTI - THEFT SYSTEM”)

HINT:

- When the audio system is shipped the ID number has not been input, so the anti - theft system is not in operation.
- If the ID number has not been input, the audio system remains the same as a normal audio system.

10. ANTI-THEFT SYSTEM OPERATION

If the normal electrical power source (connector or battery terminal) is cut off, the audio system becomes inoperable, even if the power supply resumes.

11. CANCELLING SYSTEM

The ID number chosen by the customer is input to cancel the anti - theft system (Refer to the Owner’s Manual, ”IF THE SYSTEM IS ACTIVATED”).

HINT:

To change or cancel the ID number, please refer to the Owner’s Manual, ”CANCELLING THE SYSTEM”.

BE0PP-01

LOCATION

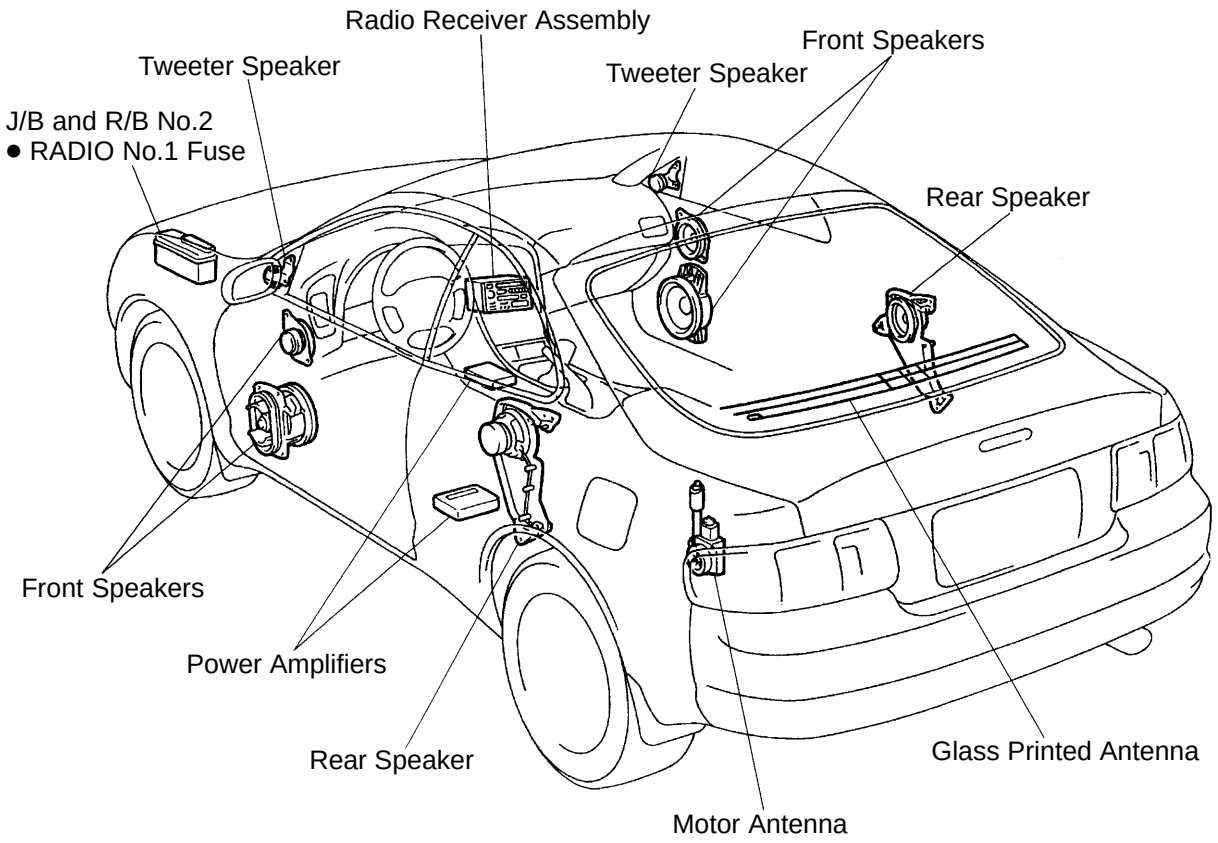

BE0PO-01

TROUBLESHOOTING

NOTICE:

When replacing the internal mechanism (computer part) of the audio system, be careful that no part of your body or clothing comes in contact with the terminals of the leads from the IC, etc. of the replacement part (spare part).

HINT:

This inspection procedure is a simple troubleshooting which should be carried out on the vehicle during system operation and was prepared on the assumption of system component troubles (except for the wires and connectors, etc.).

Always inspect the trouble taking the following items into consideration.

- Open or short circuit in the wire harness
- Connector or terminal connection fault
- For audio systems with anti-theft system, troubleshooting items marked (*) indicate that "Troubleshooting for ANTI-THEFT SYSTEM" should be carried out first.

	Problem	No.
Radio	No power coming in.	*1
	Power coming in, but radio not operating.	*2
	Noise present, but AM - FM not operating.	3
	Either speaker does not work.	4
	Either AM or FM does not work.	5
	Reception poor (Volume faint).	5
	Few preset tuning bands.	5
	Sound quality poor.	6
	Cannot set station select button.	6
	Preset memory disappears.	7
Tape Player	Cassette tape cannot be inserted.	8
	Cassette tape inserted, but no power.	*9
	Power coming in, but tape player not operating.	10
	Either speaker does not work.	11
	Sound quality poor (Volume faint).	12
	Tape jammed, malfunction with tape speed or auto-reverse.	13
	APS, SKIP, RPT buttons not operating.	14
	Cassette tape will not be ejected.	*15
CD Player	CD cannot be inserted.	16
	CD inserted, but no power.	17
	Power coming in, but CD player not operating.	18
	Sound jumps.	19
	Sound quality poor (Volume faint).	20
	Either speaker does not work.	21
	CD will not be ejected.	22
Antenna	Antenna does not fully exend or fully retract.	23
	Antenna - related.	24
Noise	Noise produced by vibration or shock while driving.	25
	Noise produced when engine starts.	26

Troubleshooting for ANTI-THEFT SYSTEM

Turn Ignition key from LOCK position to ACC position.

Display A:
ID Number is set.

"SEC" display disappears after 1 second.

No

Yes

Radio switch ON.

OK

Normal operation.

NG

Cancel ID number, refer to each malfunction item.

Display E:
ANTI-THEFT SYSTEM operation condition.
(ID number input error 10 times or more.)

Take to designated radio service station.

Display B.

Radio switch ON.

Display B.

Refer to each malfunction item.

Display D

Normal operation.

ANTI-THEFT SYSTEM operation condition.
(ID number input error 9 times or less.)
Input ID number to cancel ANTI-THEFT SYSTEM, and check display.

Display A → B

Radio switch ON.

Display D

ANTI-THEFT SYSTEM cancelled.
Check audio system again.

OK

Normal operation.

NG

Cancel ID number, refer to each malfunction item.

Display B.

Refer to each malfunction item.

Display E.

Take to designated radio service station.

Display C → A

ANTI-THEFT SYSTEM not cancelled.
(ID number input error 9 times or less.)

Liquid Crystal Display (LCD) or VFD for Audio System

Display "A"

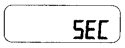

BE2814

Display "B"
Blank,
No Illumination

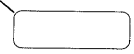

BE2815

Display "C"
Error Times

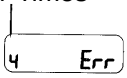

BE2816

Display "D" Example:
Radio Display



BE2817

Display "E"



BE5521

HINT:
- Refer to Owner's Manual for operation details of ANTI-THEFT SYSTEM.
- When the ID number has been cancelled, reset the same number after completing the operation, or inform the customer that it has been cancelled.

V05922

1	Radio	NO POWER COMING IN

R : w/o Tape player S : Radio - Tape player (Separate) U : Radio - Tape Player Unit
C : Radio - Tape Player - CD Player Unit

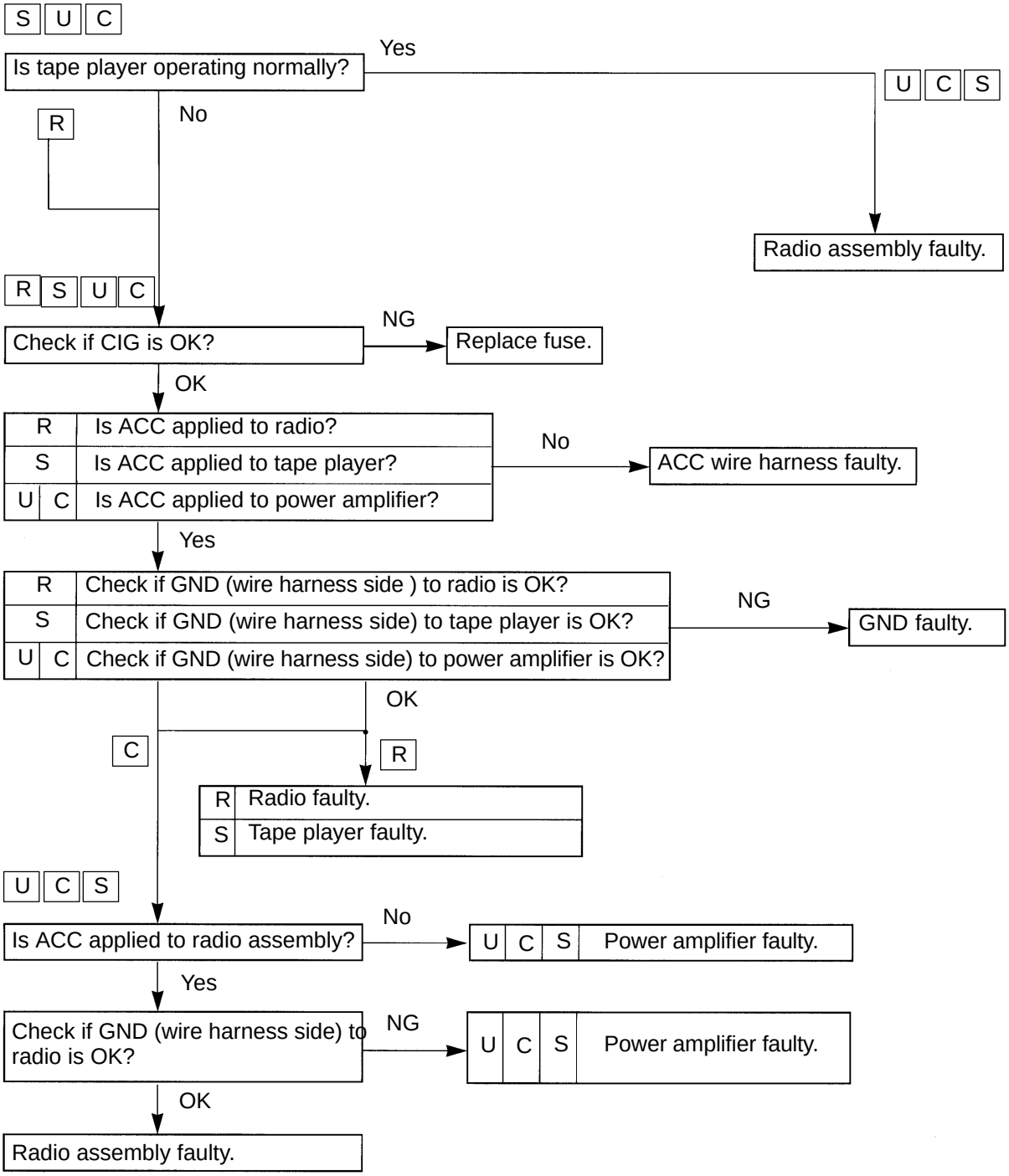

V05923

2	Radio	POWER COMING IN, BUT RADIO NOT OPERATING

R : w/o Tape player S : Radio - Tape Player (Separate) U : Radio - Tape Player Unit
C : Radio - Tape Player - CD Player Unit

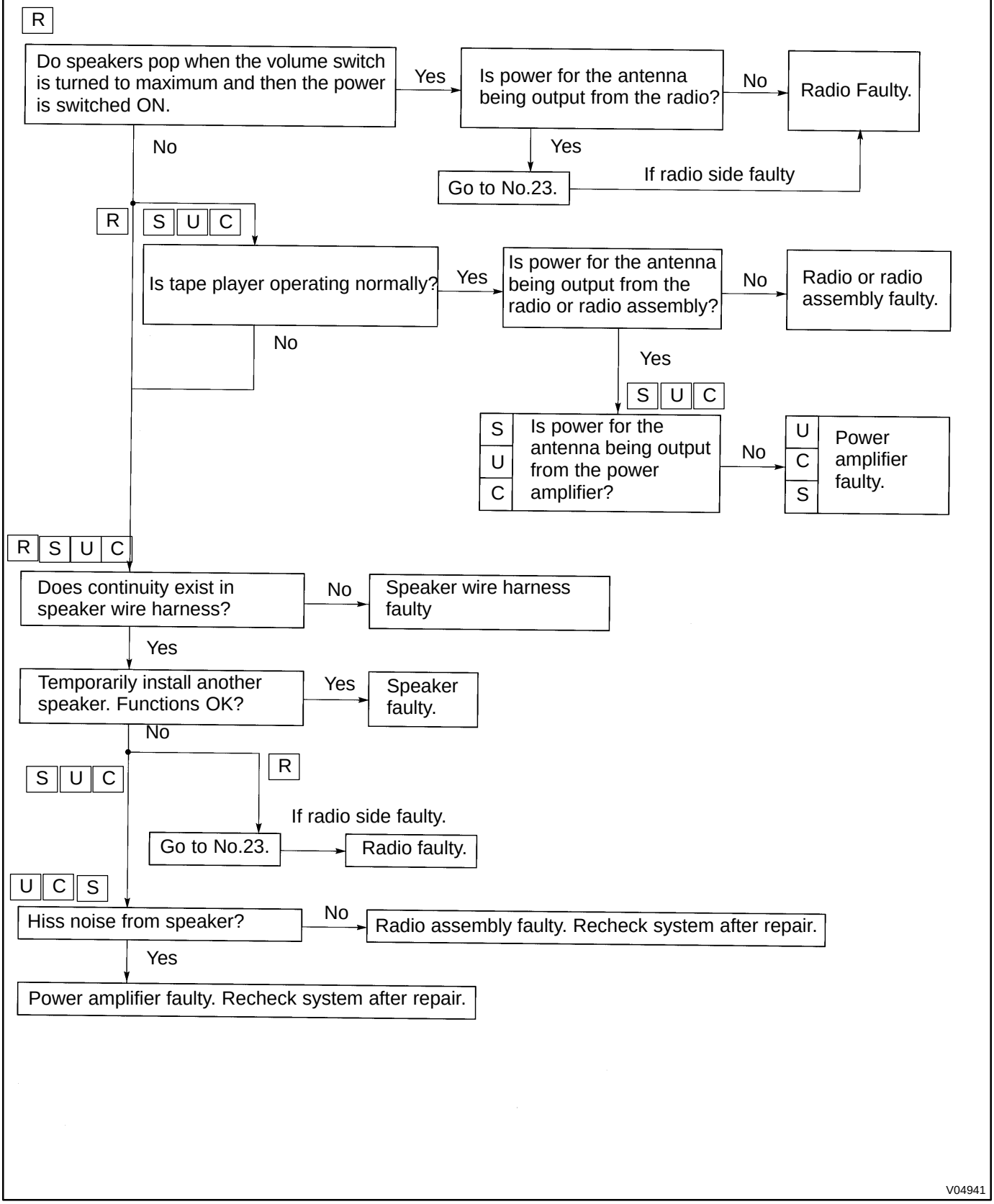

3	Radio	NOISE PRESENT, BUT AM-FM NOT OPERATING

[R] : w/o Tape Player [S] : Radio - Tape Player (Separate) [U] : Radio - Tape Player Unit
[C] : Radio - Tape Player - CD Player Unit

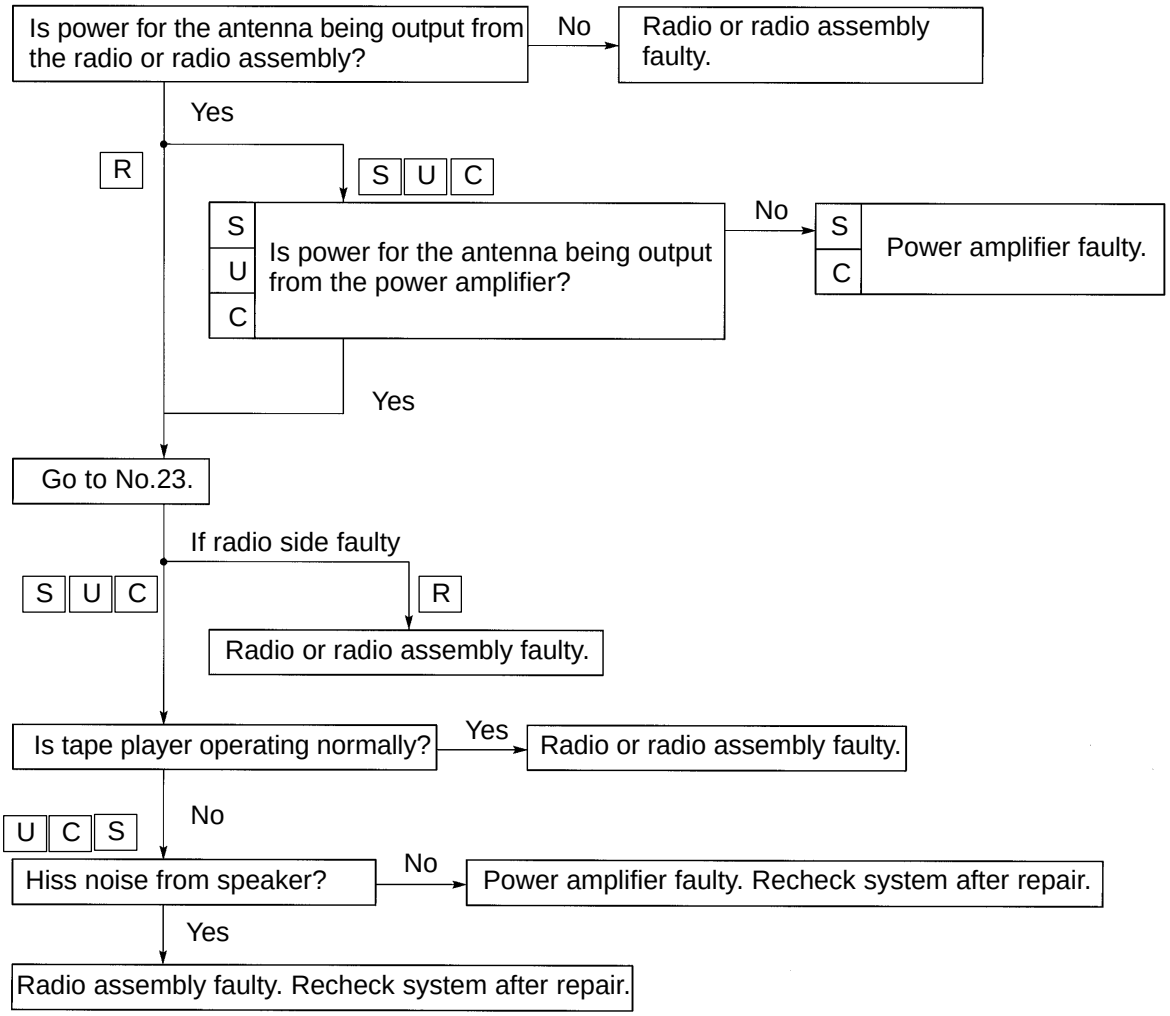

V04942

4	Radio	EITHER SPEAKER DOES NOT WORK

R : w/o Tape player S : Radio - Tape Player (Separate) U : Radio - Tape Player Unit
C : Radio - Tape Player - CD Player Unit

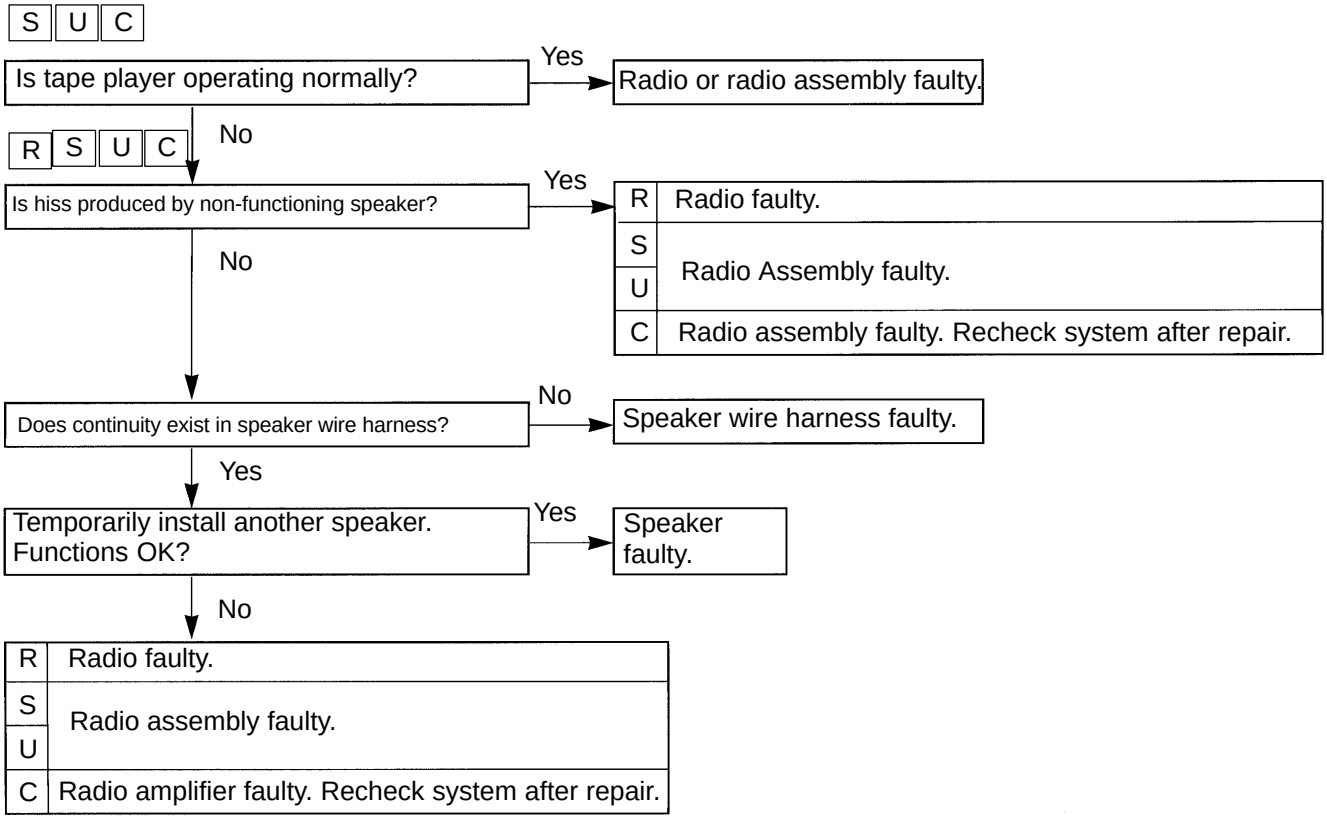

5	Radio	EITHER AM OR FM DOES NOT WORK, RECEPTION POOR (VOLUME FAINT), FEW PRESET TUNING BANDS

R : w/o Tape player S : Radio - Tape Player (Separate) U : Radio - Tape Player Unit
C : Radio - Tape Player - CD Player Unit

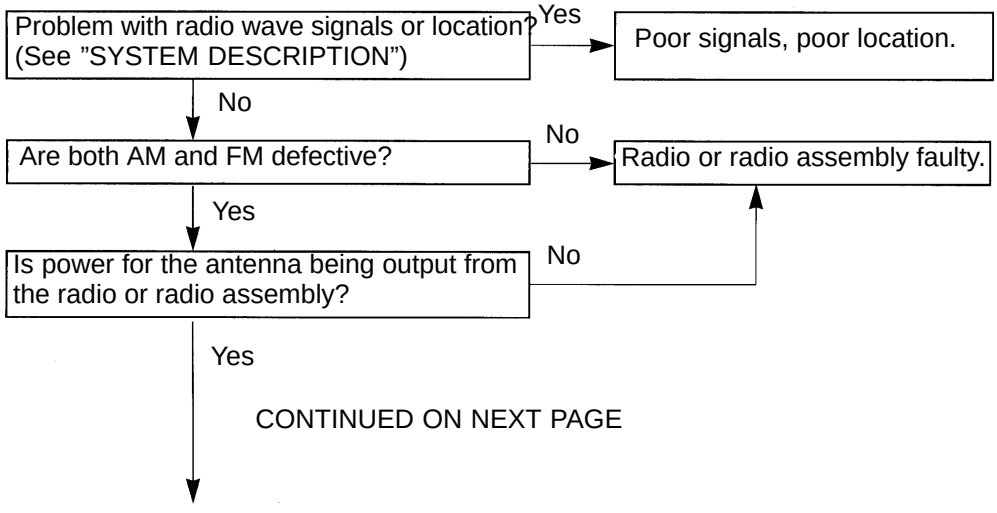

CONTINUED ON NEXT PAGE

V05924

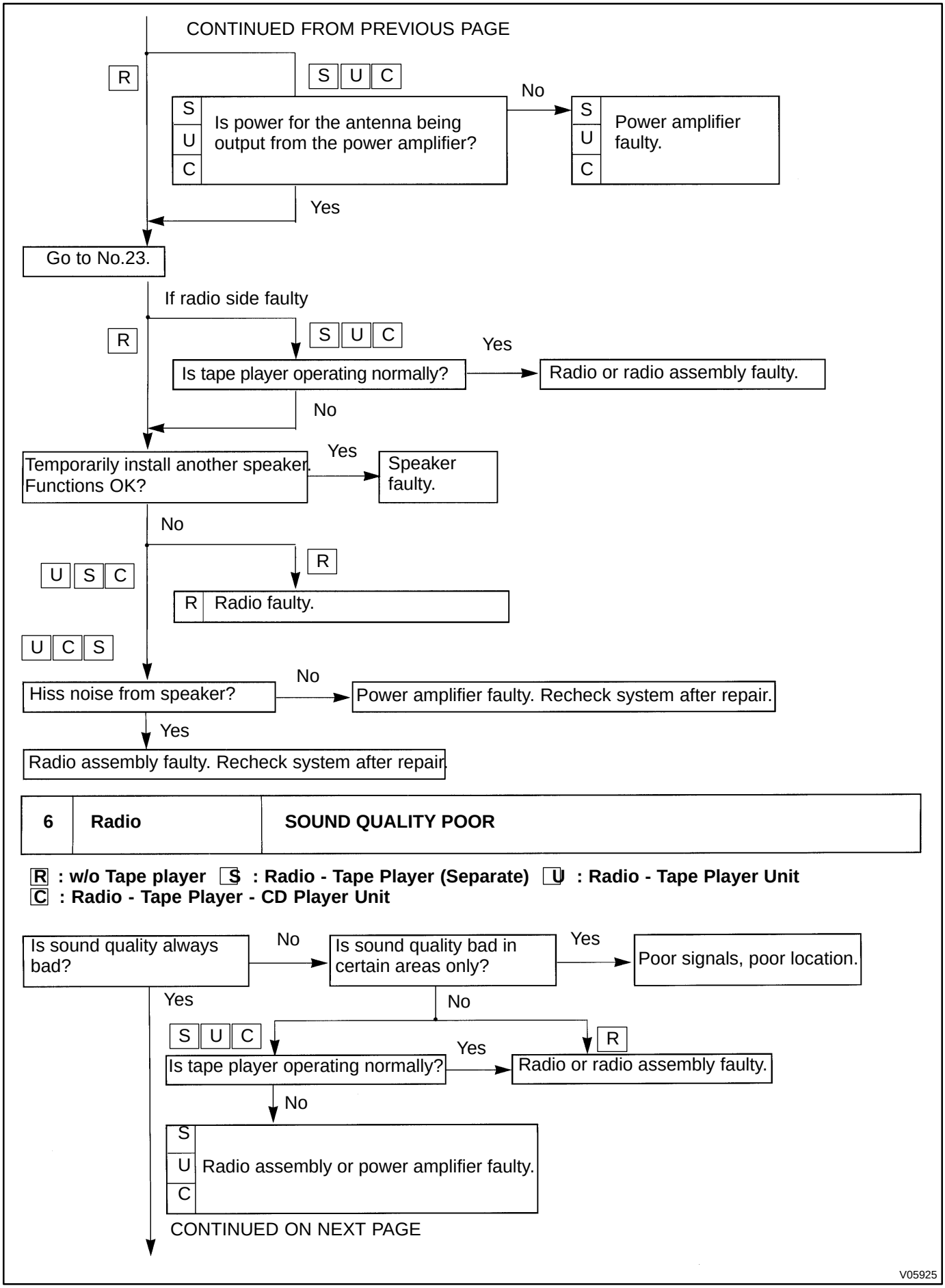
CONTINUED FROM PREVIOUS PAGE
R
S U C
S U C
Is power for the antenna being output from the power amplifier?
No
S U C
Power amplifier faulty.
Yes
Go to No.23.
If radio side faulty
R
S U C
Is tape player operating normally?
Yes
Radio or radio assembly faulty.
No
Temporarily install another speaker. Functions OK?
Yes
Speaker faulty.
No
U S C
R
R Radio faulty.
U C S
Hiss noise from speaker?
No
Power amplifier faulty. Recheck system after repair.
Yes
Radio assembly faulty. Recheck system after repair.
6
Radio
SOUND QUALITY POOR
R : w/o Tape player S : Radio - Tape Player (Separate) U : Radio - Tape Player Unit
C : Radio - Tape Player - CD Player Unit
Is sound quality always bad?
No
Is sound quality bad in certain areas only?
Yes
Poor signals, poor location.
Yes
No
S U C
R
Yes
Is tape player operating normally?
Radio or radio assembly faulty.
No
S U C Radio assembly or power amplifier faulty.
CONTINUED ON NEXT PAGE
V05925

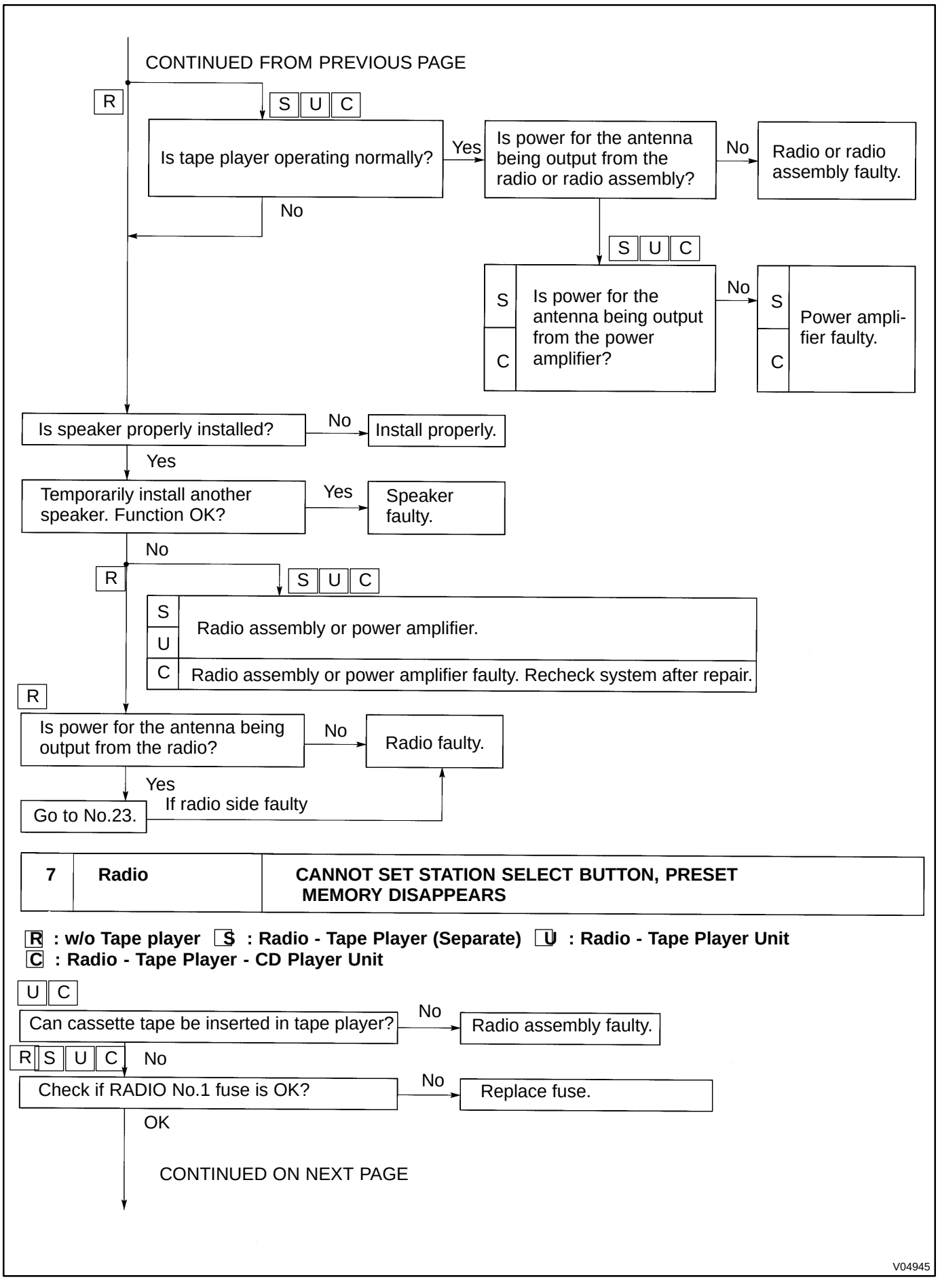
CONTINUED FROM PREVIOUS PAGE
R
S U C
Is tape player operating normally?
Yes
Is power for the antenna being output from the radio or radio assembly?
No
Radio or radio assembly faulty.
No
S U C
S
C
Is power for the antenna being output from the power amplifier?
No
S
C
Power amplifier faulty.
Is speaker properly installed?
No
Install properly.
Yes
Temporarily install another speaker. Function OK?
Yes
Speaker faulty.
No
R
S U C
S
U
C
Radio assembly or power amplifier.
Radio assembly or power amplifier faulty. Recheck system after repair.
R
Is power for the antenna being output from the radio?
No
Radio faulty.
Yes
If radio side faulty
Go to No.23.
7
Radio
CANNOT SET STATION SELECT BUTTON, PRESET MEMORY DISAPPEARS
R : w/o Tape player S : Radio - Tape Player (Separate) U : Radio - Tape Player Unit
C : Radio - Tape Player - CD Player Unit
U C
Can cassette tape be inserted in tape player?
No
Radio assembly faulty.
R S U C
No
Check if RADIO No.1 fuse is OK?
No
Replace fuse.
OK
CONTINUED ON NEXT PAGE
V04945

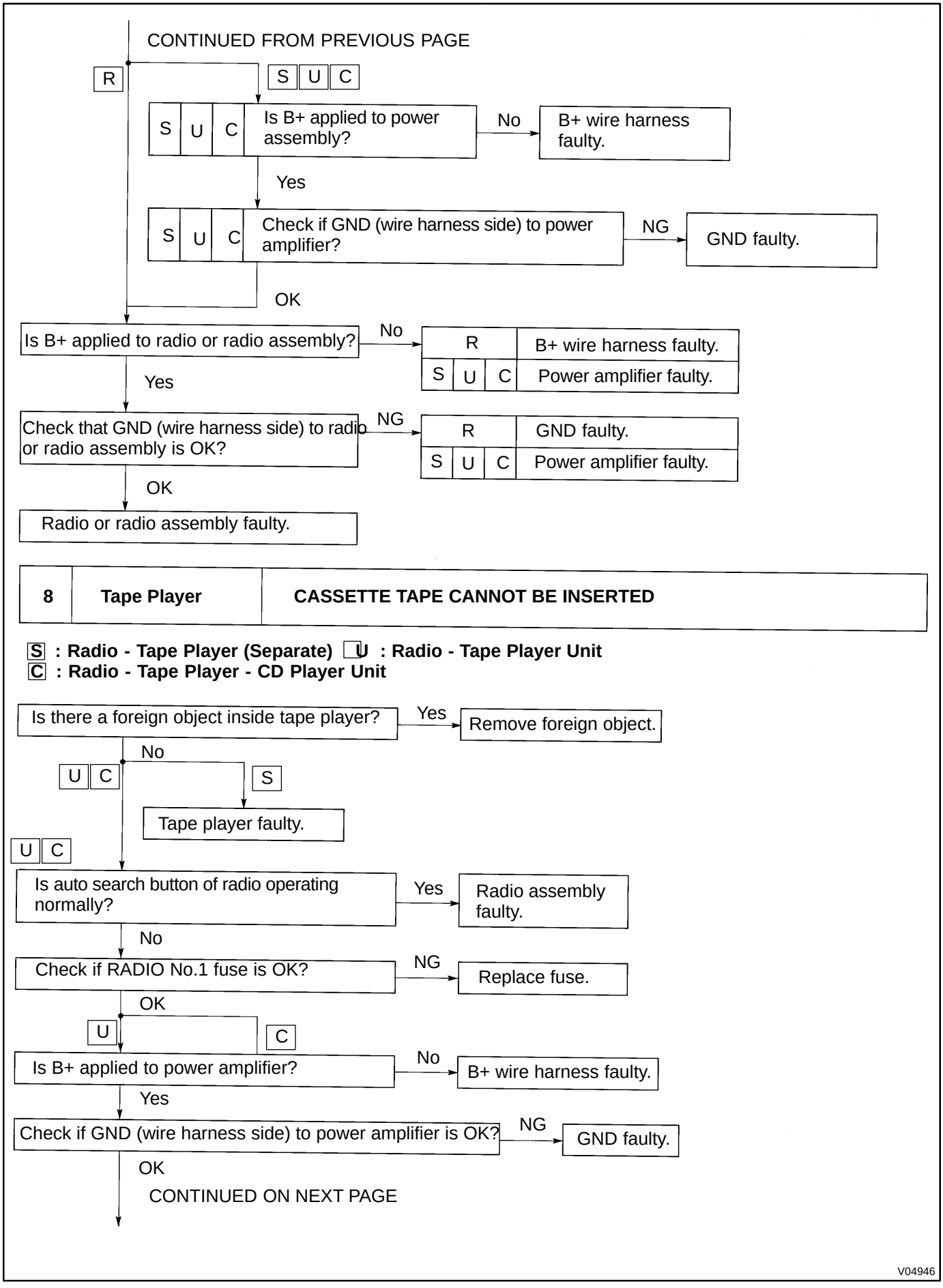
CONTINUED FROM PREVIOUS PAGE
R
S U C
S U C
Is B+ applied to power assembly?
No
B+ wire harness faulty.
Yes
S U C
Check if GND (wire harness side) to power amplifier?
NG
GND faulty.
OK
Is B+ applied to radio or radio assembly?
No
R
B+ wire harness faulty.
S U C
Power amplifier faulty.
Yes
Check that GND (wire harness side) to radio or radio assembly is OK?
NG
R
GND faulty.
S U C
Power amplifier faulty.
OK
Radio or radio assembly faulty.
8
Tape Player
CASSETTE TAPE CANNOT BE INSERTED
S : Radio - Tape Player (Separate)
U : Radio - Tape Player Unit
C : Radio - Tape Player - CD Player Unit
Is there a foreign object inside tape player?
Yes
Remove foreign object.
No
U C
S
Tape player faulty.
U C
Is auto search button of radio operating normally?
Yes
Radio assembly faulty.
No
Check if RADIO No.1 fuse is OK?
NG
Replace fuse.
OK
U
C
Is B+ applied to power amplifier?
No
B+ wire harness faulty.
Yes
Check if GND (wire harness side) to power amplifier is OK?
NG
GND faulty.
OK
CONTINUED ON NEXT PAGE
V04946

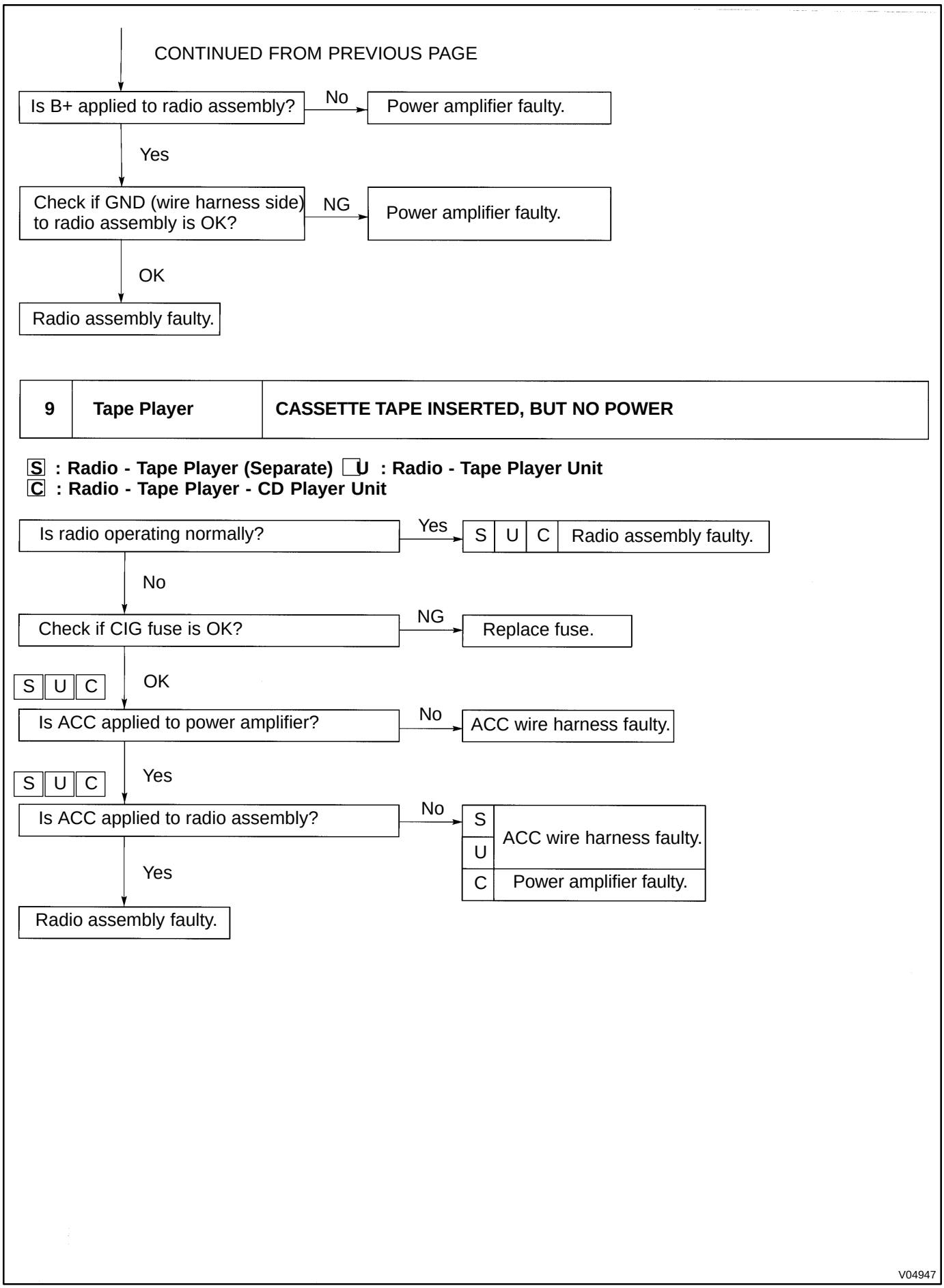
CONTINUED FROM PREVIOUS PAGE
Is B+ applied to radio assembly?
No
Power amplifier faulty.
Yes
Check if GND (wire harness side) to radio assembly is OK?
NG
Power amplifier faulty.
OK
Radio assembly faulty.
9
Tape Player
CASSETTE TAPE INSERTED, BUT NO POWER
S : Radio - Tape Player (Separate) U : Radio - Tape Player Unit
C : Radio - Tape Player - CD Player Unit
Is radio operating normally?
Yes
S U C
Radio assembly faulty.
No
Check if CIG fuse is OK?
NG
Replace fuse.
S U C
OK
Is ACC applied to power amplifier?
No
ACC wire harness faulty.
S U C
Yes
Is ACC applied to radio assembly?
No
S
U
ACC wire harness faulty.
C
Power amplifier faulty.
Yes
Radio assembly faulty.
V04947

10	Tape Player	POWER COMING IN, BUT TAPE PLAYER NOT OPERATING

S : Radio - Tape Player (Separate) U : Radio - Tape Player Unit
C : Radio - Tape Player - CD Player Unit

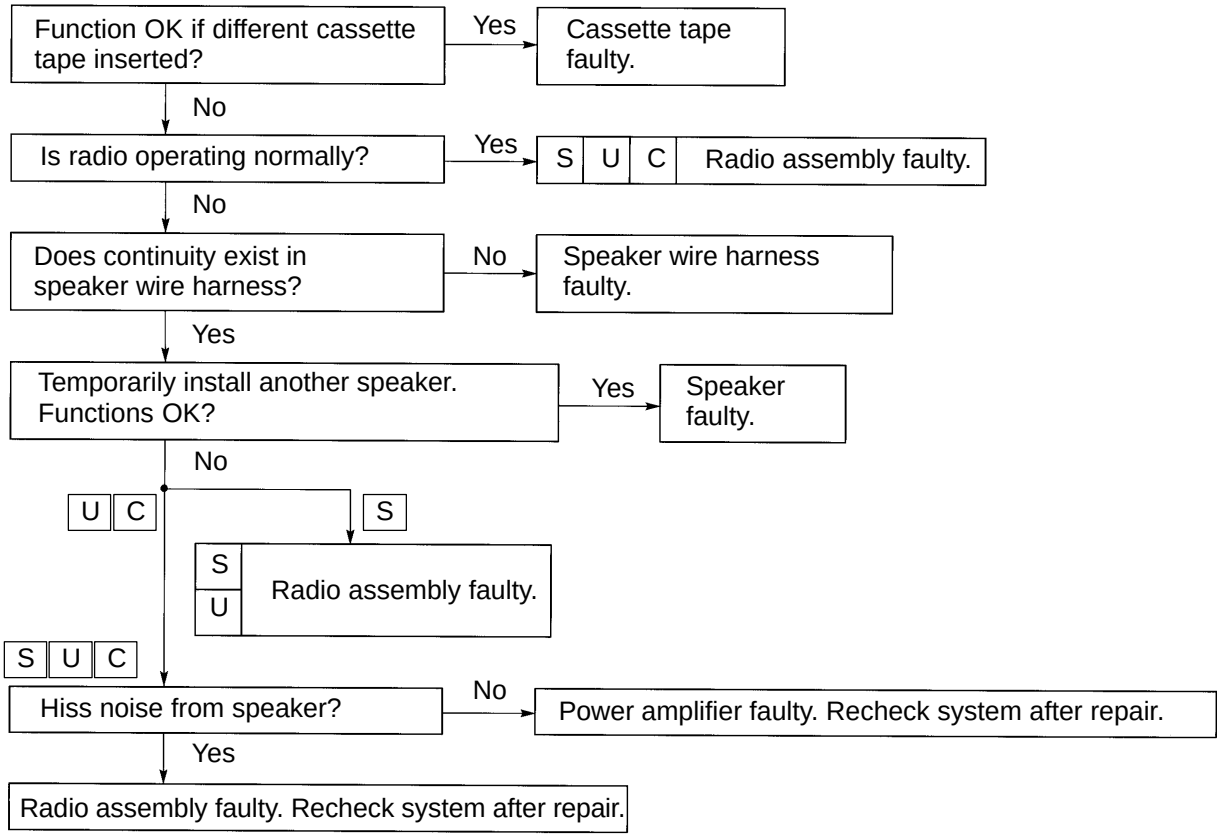

11	Tape Player	EITHER SPEAKER DOES NOT WORK

S : Radio - Tape Player (Separate) U : Radio - Tape Player Unit
C : Radio - Tape Player - CD Player Unit

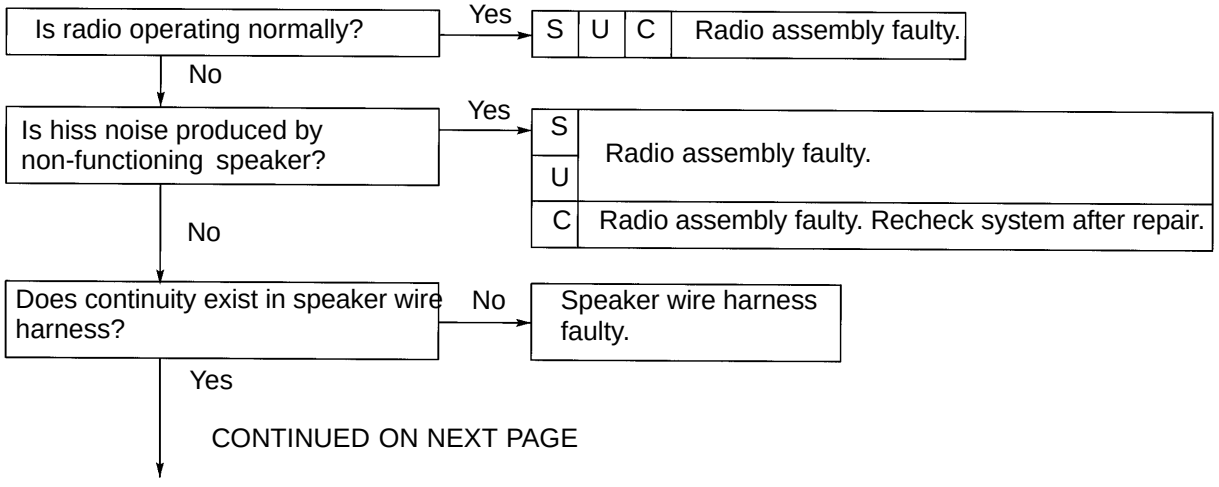

CONTINUED ON NEXT PAGE

V04948

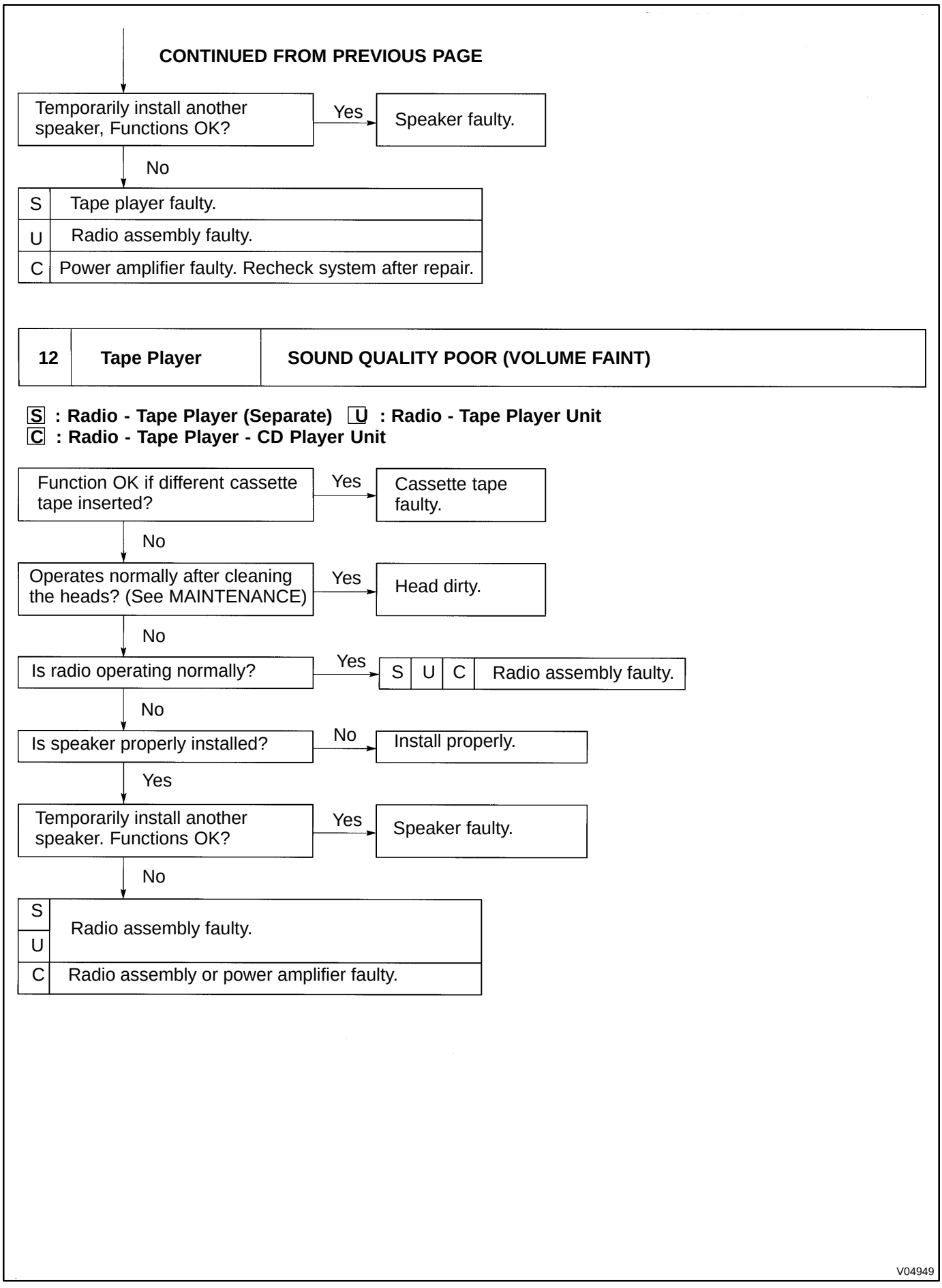
CONTINUED FROM PREVIOUS PAGE
Temporarily install another speaker, Functions OK?
Yes
Speaker faulty.
No
S Tape player faulty.
U Radio assembly faulty.
C Power amplifier faulty. Recheck system after repair.
12
Tape Player
SOUND QUALITY POOR (VOLUME FAINT)
S : Radio - Tape Player (Separate) U : Radio - Tape Player Unit
C : Radio - Tape Player - CD Player Unit
Function OK if different cassette tape inserted?
Yes
Cassette tape faulty.
No
Operates normally after cleaning the heads? (See MAINTENANCE)
Yes
Head dirty.
No
Is radio operating normally?
Yes
S U C Radio assembly faulty.
No
Is speaker properly installed?
No
Install properly.
Yes
Temporarily install another speaker. Functions OK?
Yes
Speaker faulty.
No
S U Radio assembly faulty.
C Radio assembly or power amplifier faulty.
V04949

13	Tape Player	TAPE JAMMED, MALFUNCTION WITH TAPE SPEED OR AUTO-REVERSE

S : Radio - Tape Player (Separate) U : Radio - Tape Player Unit
C : Radio - Tape Player - CD Player Unit

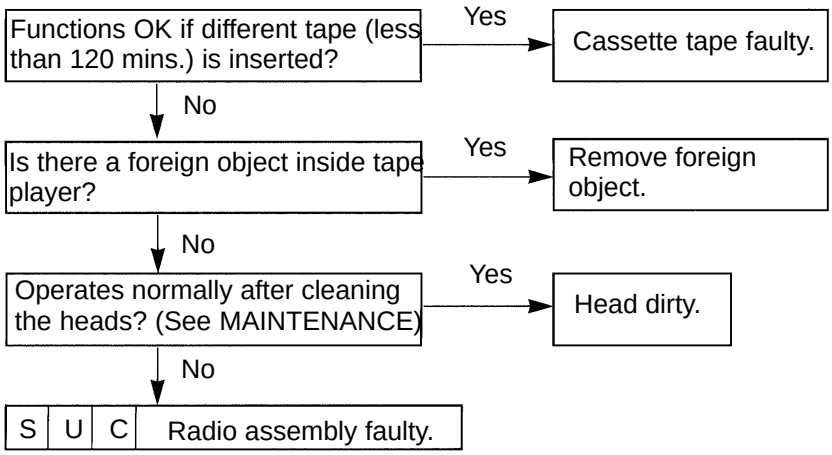

14	Tape Player	APS, SKIP RPT BUTTONS NOT OPERATING

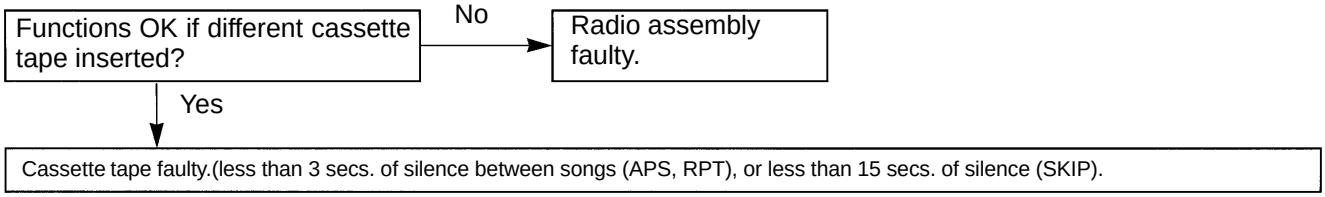

15	Tape Player	CASSETTE TAPE WILL NOT BE EJECTED

S : Radio - Tape Player (Separate) U : Radio - Tape Player Unit
C : Radio - Tape Player - CD Player Unit

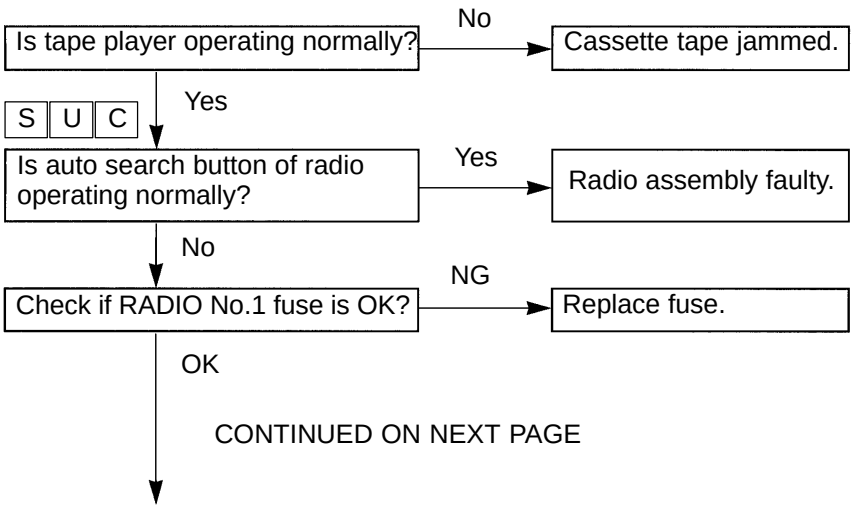

CONTINUED ON NEXT PAGE

V05926

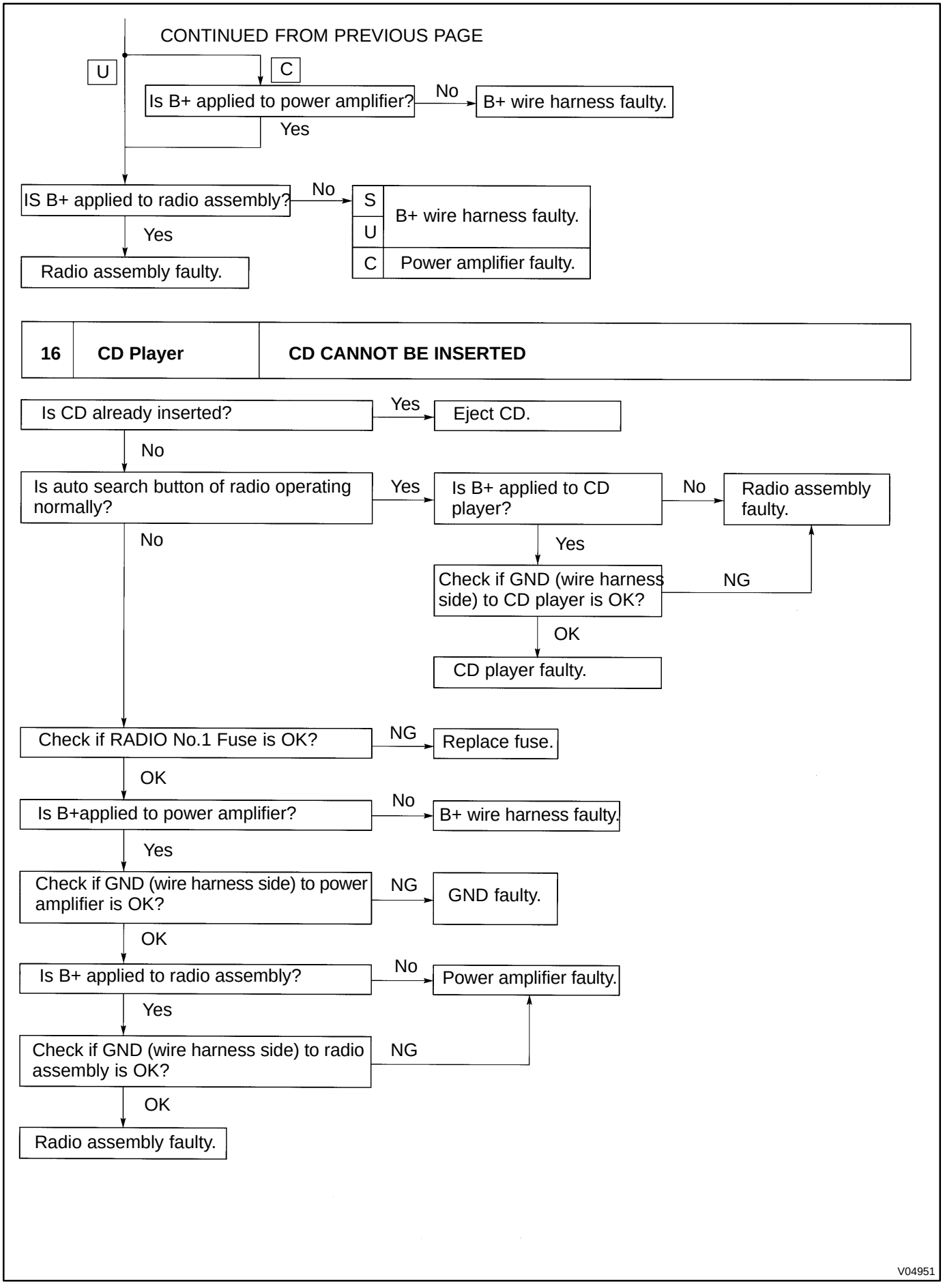
CONTINUED FROM PREVIOUS PAGE
U
C
Is B+ applied to power amplifier?
No
B+ wire harness faulty.
Yes
IS B+ applied to radio assembly?
No
S
U
B+ wire harness faulty.
C
Power amplifier faulty.
Yes
Radio assembly faulty.
16
CD Player
CD CANNOT BE INSERTED
Is CD already inserted?
Yes
Eject CD.
No
Is auto search button of radio operating normally?
Yes
Is B+ applied to CD player?
No
Radio assembly faulty.
No
Yes
Check if GND (wire harness side) to CD player is OK?
NG
OK
CD player faulty.
Check if RADIO No.1 Fuse is OK?
NG
Replace fuse.
OK
Is B+applied to power amplifier?
No
B+ wire harness faulty.
Yes
Check if GND (wire harness side) to power amplifier is OK?
NG
GND faulty.
OK
Is B+ applied to radio assembly?
No
Power amplifier faulty.
Yes
Check if GND (wire harness side) to radio assembly is OK?
NG
OK
Radio assembly faulty.
V04951

17 CD Player — CD INSERTED, BUT NO POWER

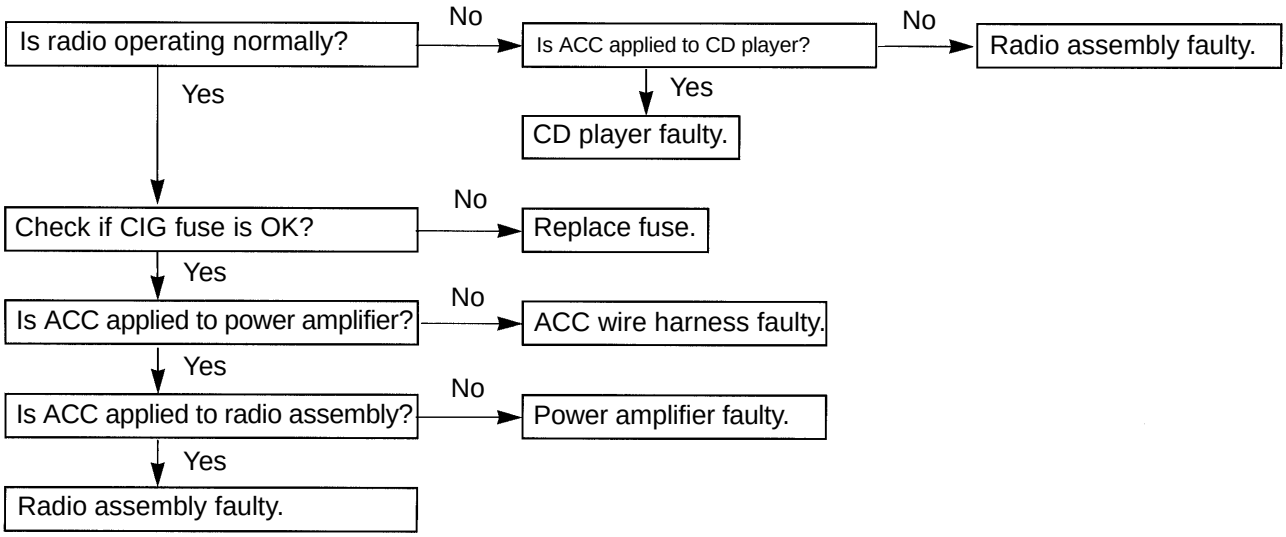

18 CD Player — POWER COMING IN, BUT CD PLAYER NOT OPERATING

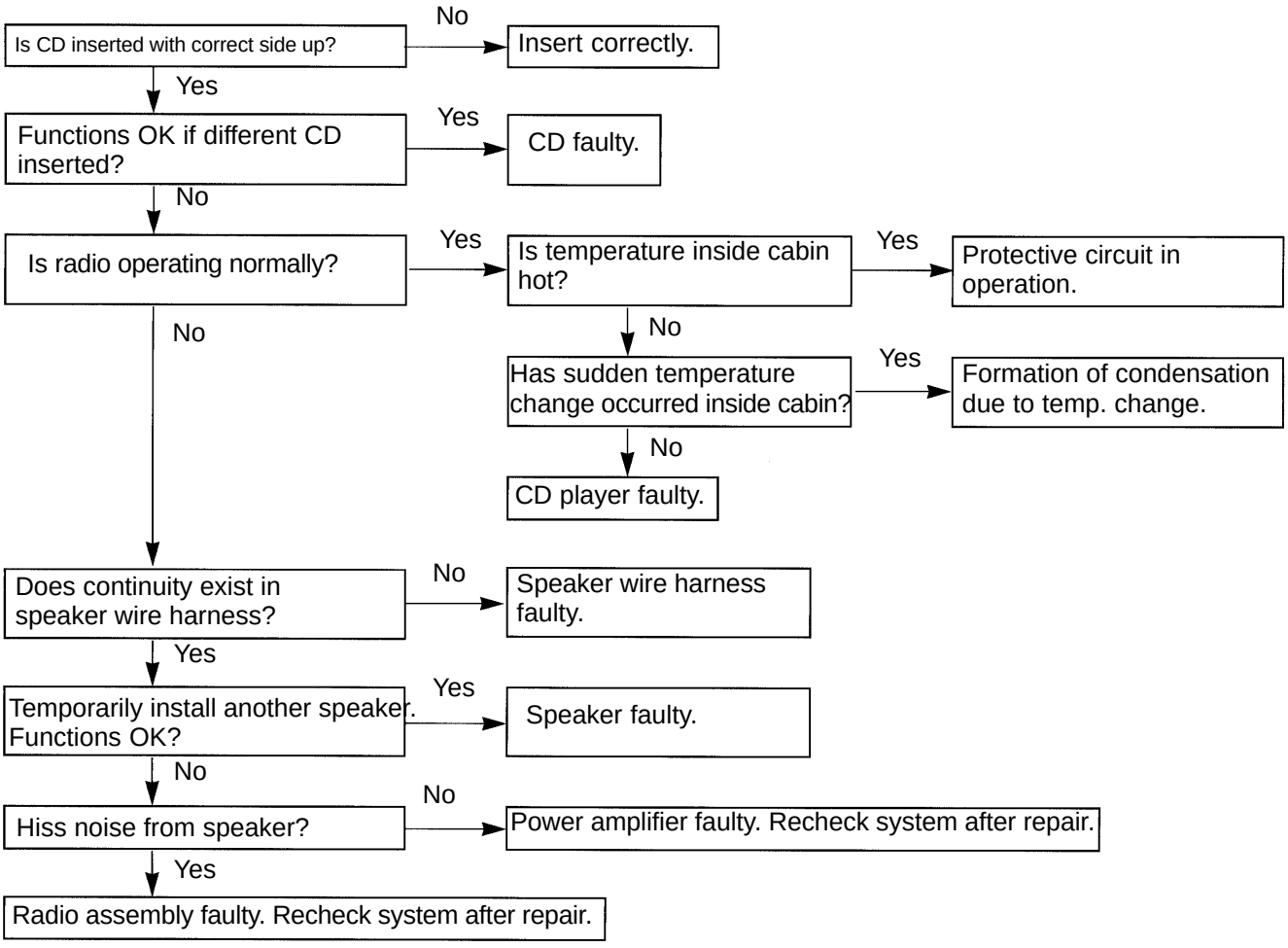

V05927

19	CD Player	SOUND JUMPS

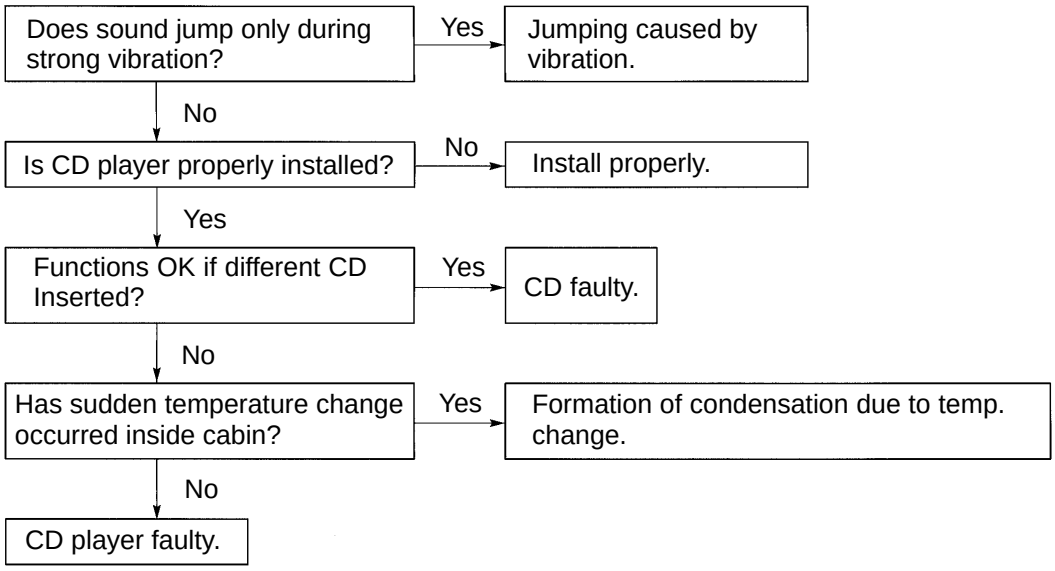

20	CD Player	SOUND QUALITY POOR (VOLUME FAINT)

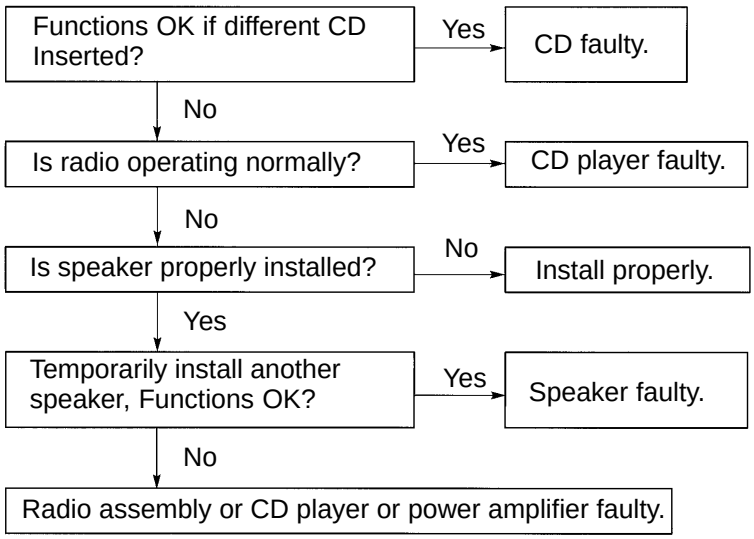

V04953

21 CD Player — EITHER SPEAKER DOES NOT WORK

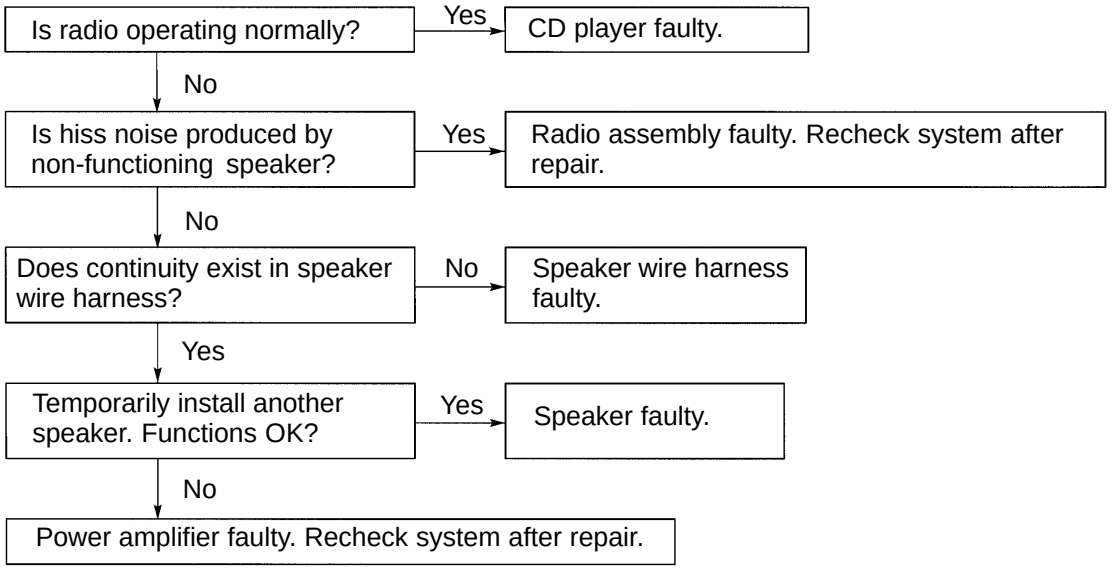

22 CD Player — CD WILL NOT BE EJECTED

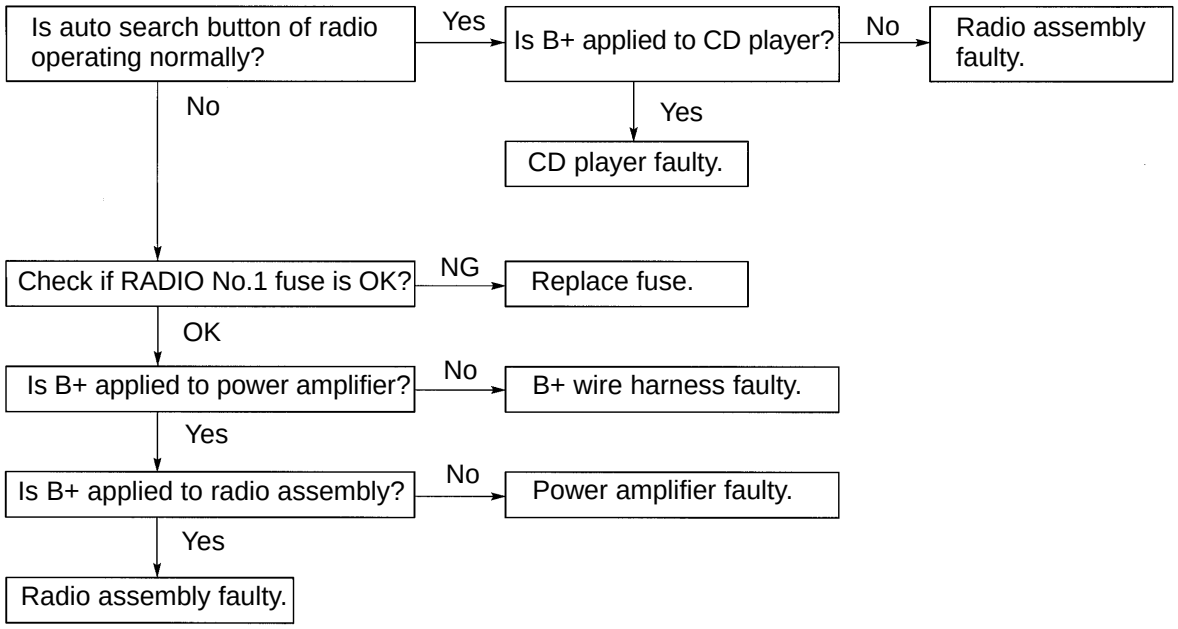

V04954

23	Antenna	ANTENNA DOES NOT FULLY EXTEND OR FULLY RETRACT

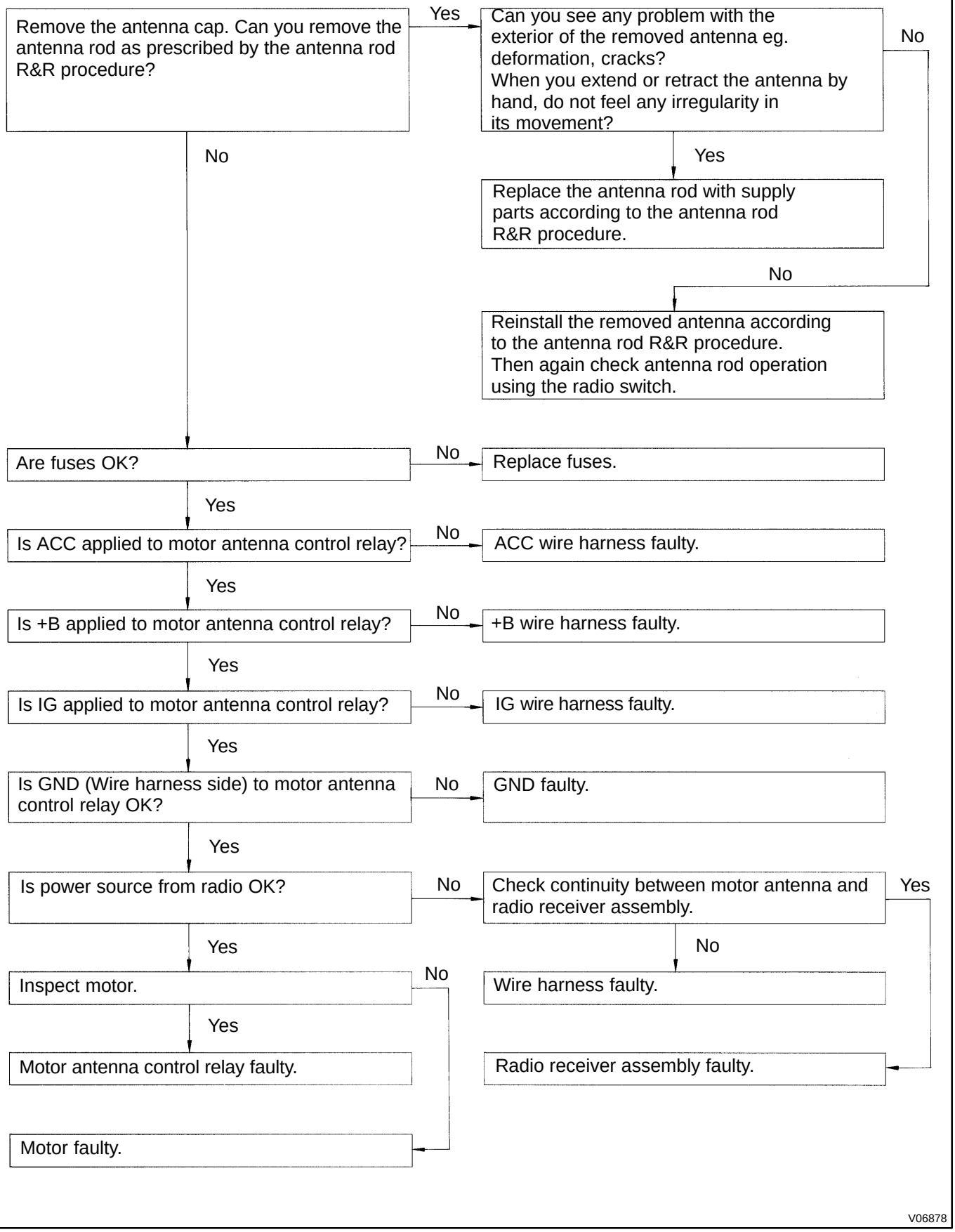

24	Antenna	ANTENNA-RELATED

- Normal Type
  Does antenna rod extend fully when radio switch is turned on?
- Variable Length Type
  Does the antenna rod extend to the specified length when the radio switch is turned on?
  Does the antenna rod fully retract when the radio switch is turned off?

No → Go to 23.

Yes ↓

Inspect glass printed antenna. (w/ glass printed antenna)

NG → Glass printed antenna faulty.

OK ↓

Is the antenna nut tight?

No → Tighten nut.

Yes ↓

Temporarily install another antenna. Functions OK?

No → Motor antenna faulty.

Yes ↓

Radio receiver side faulty.

25	Noise	NOISE PRODUCED BY VIBRATION OR SHOCK WHILE DRIVING

Is speaker properly installed?

No → Install properly.

Yes ↓

Is each system correctly installed?

No → Install properly.

Yes ↓

With vehicle in a stationary condition lightly tap each system. Is noise produced?

Yes → Each system faulty.

No ↓

Noise produced by static electricity accumulating in the vehicle body.

V06879

26	Noise	NOISE PRODUCED WHEN ENGINE STARTS

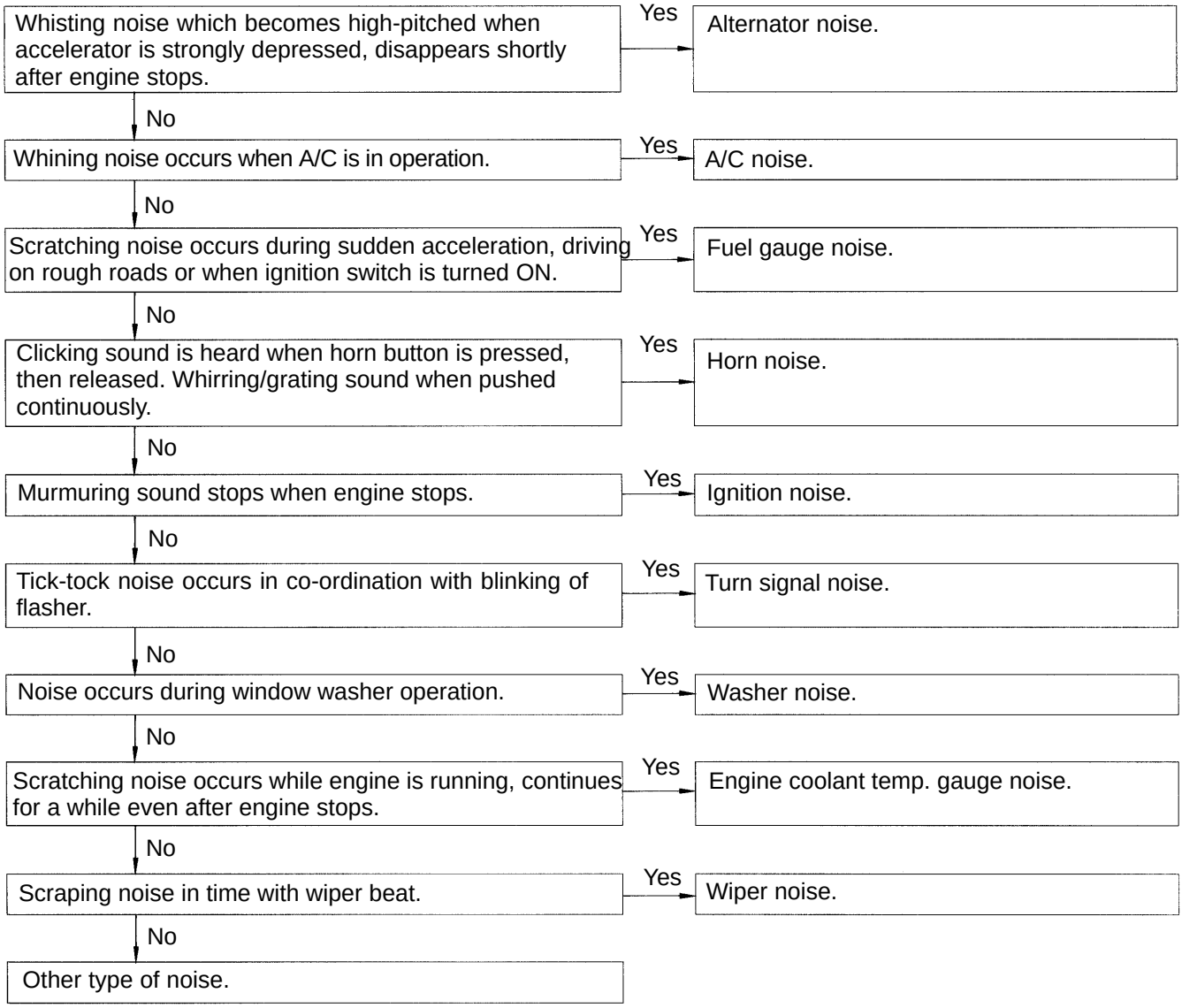

V06880

POWER STEERING FLUID

SR01V-08

BLEEDING

1. CHECK FLUID LEVEL

(See page SR-5)

2. JACK UP FRONT OF VEHICLE AND SUPPORT IT WITH STANDS

3. TURN STEERING WHEEL

With the engine stopped, turn the wheel slowly from lock to lock several times.

4. LOWER VEHICLE

5. START ENGINE

Run the engine at idle for a few minutes.

6. TURN STEERING WHEEL

(a) With the engine idling, turn the wheel to left or right full lock and keep it there for 2-3 seconds, then turn the wheel to the opposite full lock and keep it there for 2-3 seconds.

(b) Repeat (a) several times.

7. STOP ENGINE

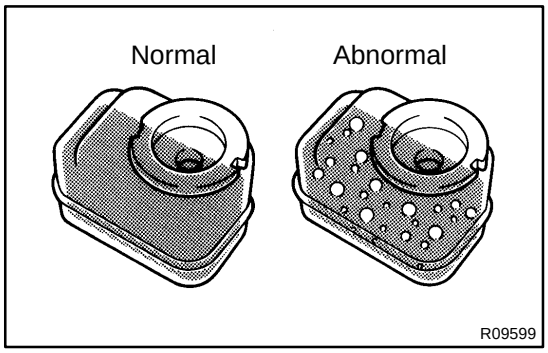

8. CHECK FOR FOAMING OR EMULSIFICATION

If the system has to be bled twice specifically because of foaming or emulsification, check for fluid leaks in the system.

9. CHECK FLUID LEVEL

(See page SR-5)

BR0Q8-05

COMPONENTS

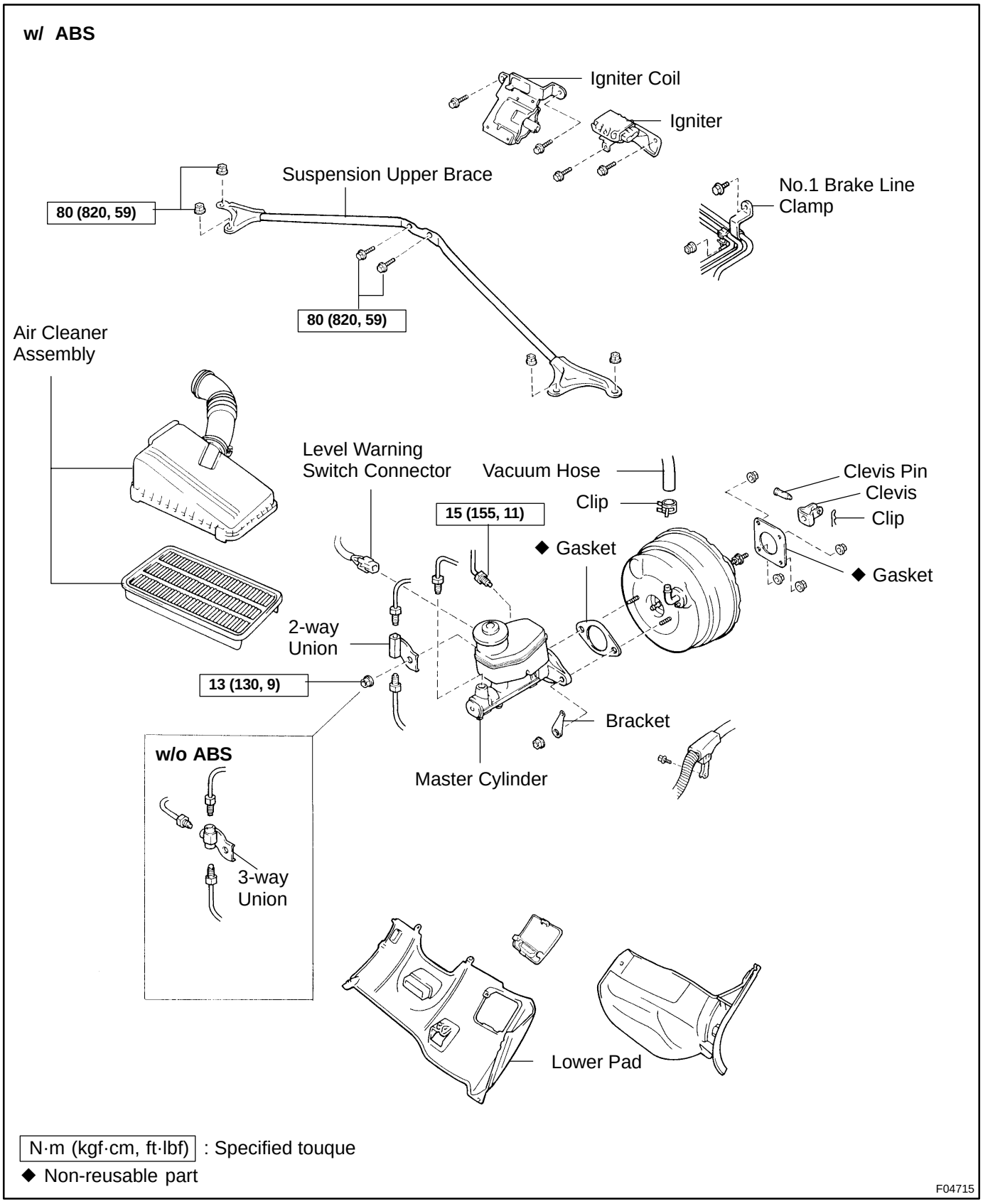

BR0QA-02

INSTALLATION

1. INSTALL BRAKE BOOSTER

(a) Install the booster and a new gasket.
(b) Connect the 2 hoses.
(c) Install the clevis to the operating rod.
(d) Install and torque the booster installation nuts.
Torque: 13 N·m (130 kgf·cm, 9 ft·lbf)
(e) Install the clevis pin into the clevis and brake pedal, and install the clip to the clevis pin.
(f) Install the pedal return spring.
(g) Install the 3 brake lines to the No.1 brake line clamp.
Torque: 5.4 N·m (55 kgf·cm, 48 in.·lbf)
(h) Using SST and spanner, connect the brake line to the flexible hose of LH front brake.
SST 09751-3601 1
Torque: 15 N·m (155 kgf·cm, 11 ft·lbf)
(i) Install the brake line grommet to the body.

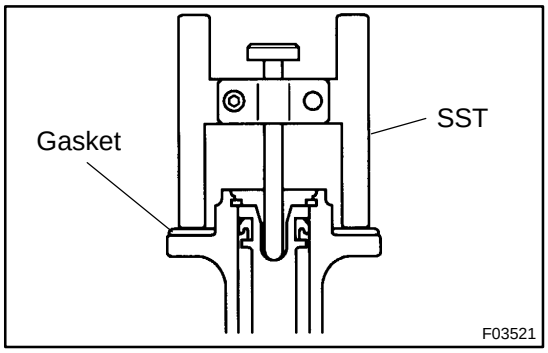

2. ADJUST LENGTH OF BOOSTER PUSH ROD

(a) Install a new gasket on the master cylinder.
(b) Set the SST on the gasket, and lower the pin until its tip slightly touches the piston.
SST 09737-00010

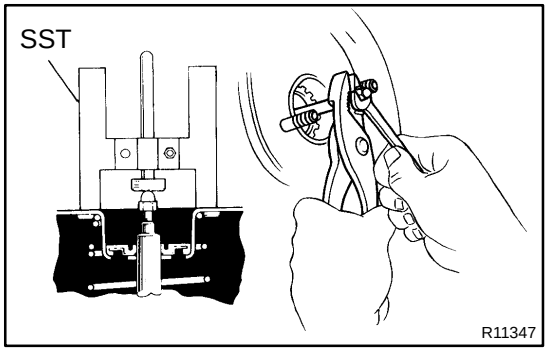

(c) Turn the SST upside down, and set it on the booster.
SST 09737-00010
(d) Measure the clearance between the booster push rod and pin head (SST).
Clearance: 0 mm (0 in.)
(e) Adjust the booster push rod length until the push rod lightly touches the pin head.

3. INSTALL MASTER CYLINDER (See page BR-13)
4. CONNECT VACUUM HOSE TO BRAKE BOOSTER
5. FILL BRAKE RESERVOIR WITH BRAKE FLUID AND BLEED BRAKE SYSTEM (See page BR-4)
6. CHECK FOR FLUID LEAKAGE
7. CHECK AND ADJUST BRAKE PEDAL (See page BR-6)
8. DO OPERATIONAL CHECK (See page BR-14)

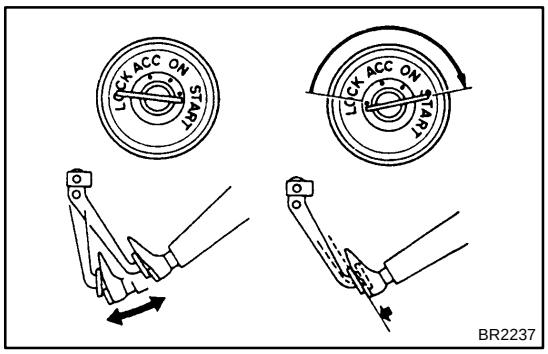

BRAKE BOOSTER ASSEMBLY

BR0Q7-01

ON-VEHICLE INSPECTION

1. OPERATING CHECK

(a) Depress the brake pedal several times with the engine off and check that there is no change in the pedal reserve distance.

(b) Depress the brake pedal and start the engine. If the pedal goes down slightly, operation is normal.

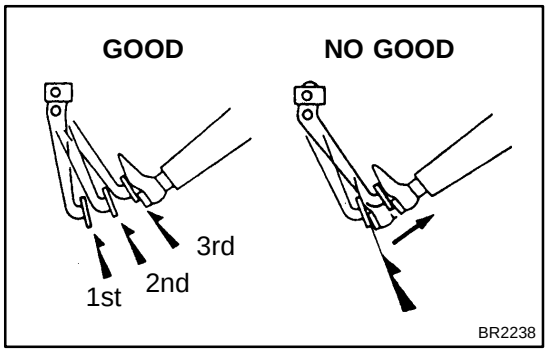

2. AIR TIGHTNESS CHECK

(a) Start the engine and stop it after 1 or 2 minutes. Depress the brake pedal several times slowly.

If the pedal goes down farthest the 1st time, but gradually rises after the 2nd or 3rd time, the booster is air tight.

(b) Depress the brake pedal while the engine is running, and stop the engine with the pedal depressed. If there is no change in the pedal reserve travel after holding the pedal for 30 seconds, the booster is air tight.

BR0Q9-01

REMOVAL

1. **REMOVE LH FRONT WHEEL**
2. **REMOVE MASTER CYLINDER (See page BR-9)**
3. **DISCONNECT VACUUM HOSE FROM BRAKE BOOSTER**
4. **REMOVE LOWER PAD**
5. **REMOVE PEDAL RETURN SPRING**
6. **REMOVE CLIP AND CLEVIS PIN**
7. **REMOVE IGNITION COIL AND IGNITER**

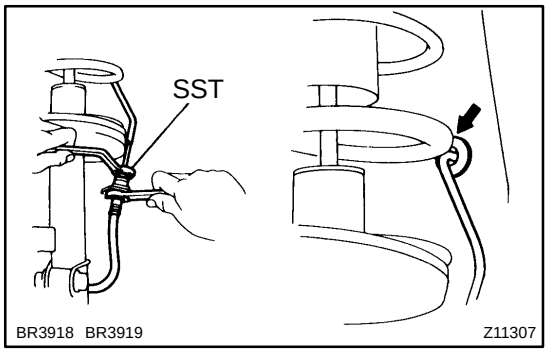

8. **REMOVE BRAKE BOOSTER**

(a) Using SST and spanner, disconnect the brake line from the flexible hose of LH front brake.
SST 09751-3601 1

(b) Remove the brake line grommet from the body.

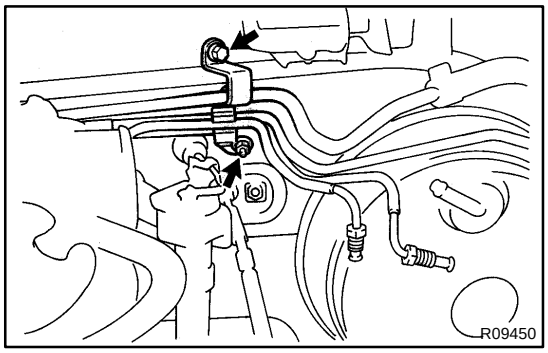

(c) Remove the 3 brake lines, as shown in the illustration from the No.1 brake line clamp.

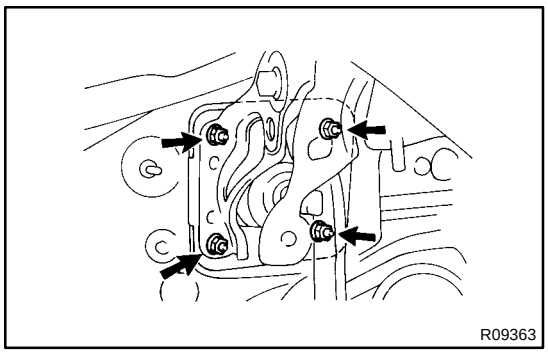

(d) Remove 4 nuts and clevis.

(e) Pull out the brake booster and gasket.

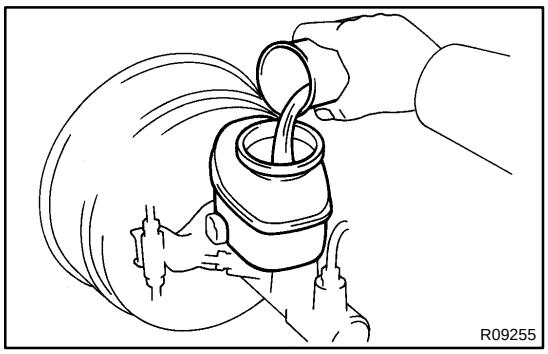

BRAKE FLUID

BR0PY-04

BLEEDING

HINT:

If any work is done on the brake system or if air in the brake lines is suspected, bleed the system of air.

NOTICE:

Do not let brake fluid remain on a painted surface. Wash it off immediately.

1. FILL BRAKE RESERVOIR WITH BRAKE FLUID

Fluid: SAEJ1703 or FMVSS No.116 DOT3

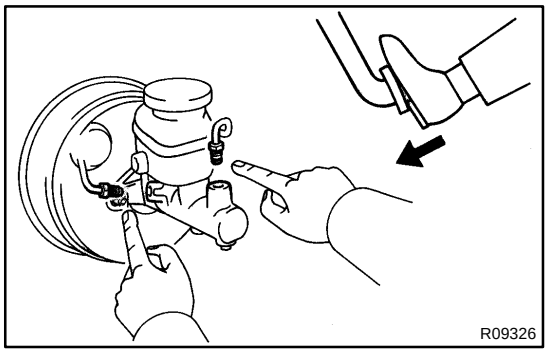

2. BLEED MASTER CYLINDER

HINT:

If the master cylinder has been disassembled or if the reservoir becomes empty, bleed the air from the master cylinder.

(a) Disconnect the brake lines from the master cylinder.

(b) Slowly depress the brake pedal and hold it.

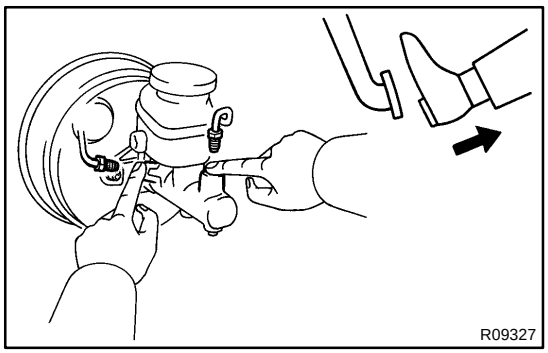

(c) Block off the outlet plug with your finger and release the brake pedal.

(d) Repeat (b) and (c) 3 or 4 times.

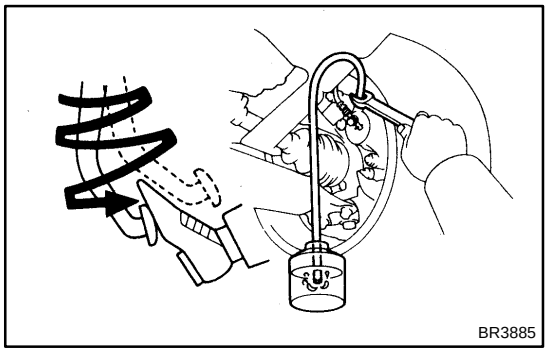

3. BLEED BRAKE LINE

(a) Connect the vinyl tube to the caliper.

(b) Depress the brake pedal several times, then loosen the bleeder plug with the pedal held down.

(c) At the point when fluid stops coming out, tighten the bleeder plug, then release the brake pedal.

(d) Repeat (b) and (c) until all the air in the fluid has been bled out.

(e) Repeat the above procedure to bleed the air out of the brake line for each wheel.

4. CHECK FLUID LEVEL IN RESERVOIR

Check the fluid level and add fluid if necessary.

Fluid: SAEJ1703 or FMVSS No.116 DOT3

BRAKE MASTER CYLINDER

COMPONENTS

BR0Q1-05

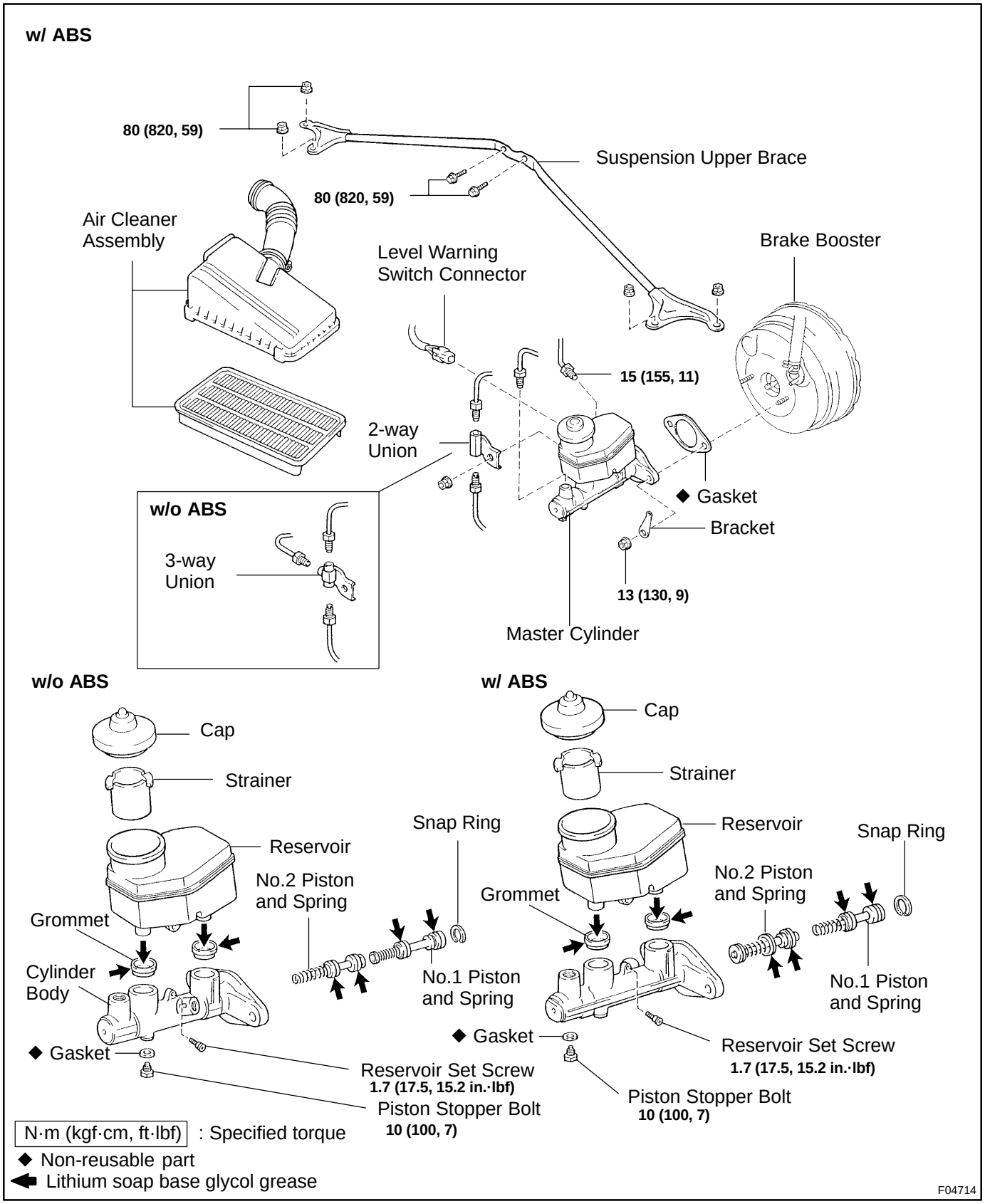

BR0Q3-02

DISASSEMBLY

1. REMOVE RESERVOIR

(a) Remove the set screw and pull out the reservoir.
Torque: 1.7 N·m (17.5 kgf·cm, 15.2 in.·lbf)

(b) Remove the cap and strainer from the reservoir.

2. REMOVE 2 GROMMETS

3. PLACE CYLINDER IN VISE

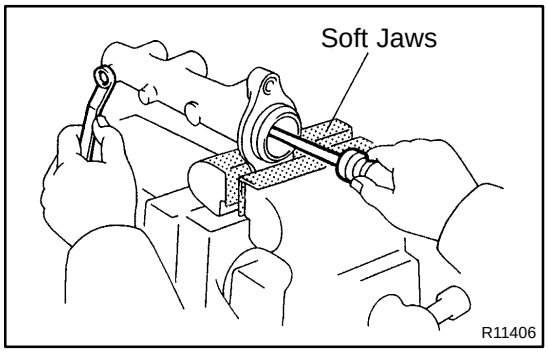

4. REMOVE PISTON STOPPER BOLT

Using a screwdriver, push the pistons in all the way and remove the piston stopper bolt and gasket.

HINT:

Tape the screwdriver tip before use.

Torque: 10 N·m (100 kgf·cm, 7 ft·lbf)

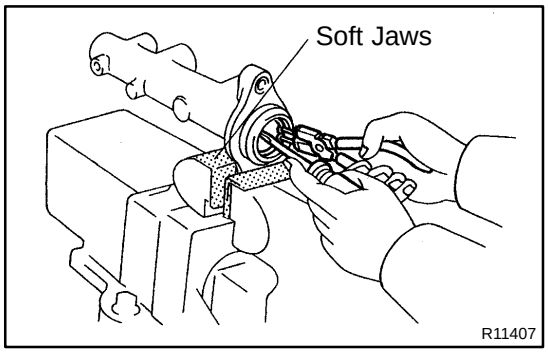

5. REMOVE PISTONS

(a) Push in the piston with a screwdriver and remove the snap ring with snap ring pliers.

HINT:

Tape the screwdriver tip before use.

(b) Remove the No.1 piston and spring by hand, pulling straight out, not at an angle.

NOTICE:

- **If pulled out and inserted at an angle, there is a possibility that the cylinder bore could be damaged.**
- **At the time of reassembly, be careful not to damage the rubber lips on the pistons.**

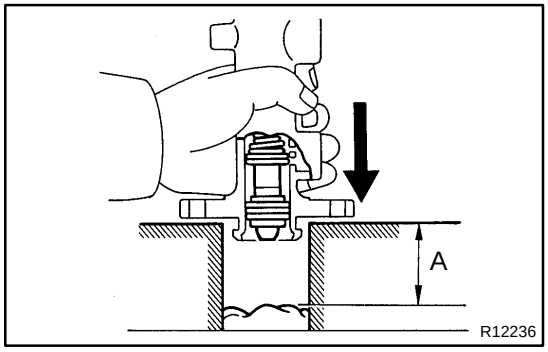

(c) Place a rag and 2 wooden blocks on the work table, and lightly tap the cylinder flange against the block edges until the piston drops out of the cylinder.

HINT:

Make sure the distance (A) from the rag to the top of the blocks is at least 100 mm (3.94 in.).

BR0Q4-01

INSPECTION

HINT:

Clean the disassembled parts with compressed air.

1. INSPECT CYLINDER BORE FOR RUST OR SCORING

2. INSPECT CYLINDER FOR WEAR OR DAMAGE

If necessary, clean or replace the cylinder.

BR0Q6-01

INSTALLATION

Installation is in the reverse order of removal (See page BR-9).

1. **BEFORE INSTALLATION, ADJUST LENGTH OF BRAKE BOOSTER PUSH ROD (See page BR-17)**
2. **AFTER INSTALLATION, FILL BRAKE RESERVOIR WITH BRAKE FLUID AND BLEED BRAKE SYSTEM (See page BR-4)**
3. **CHECK FOR LEAKS, CHECK AND ADJUST BRAKE PEDAL (See page BR-6)**

BR0Q5-01

REASSEMBLY

Reassembly is in the reverse order of disassembly (See page BR-10).

NOTICE:

Apply lithium soap base glycol grease to the rubber parts indicated by the arrows (See page BR-8).

BR0Q2-01

REMOVAL

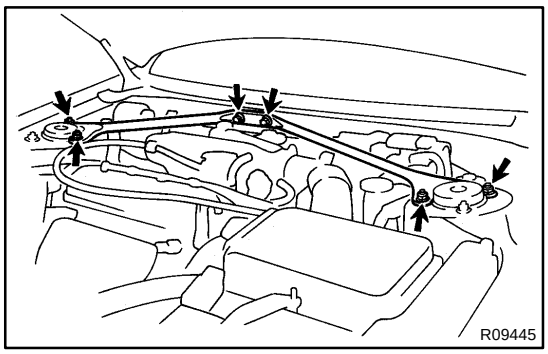

1. REMOVE SUSPENSION UPPER BRACE

(a) Remove the 2 bolts, 4 nuts and upper brace.
Torque: 80 N·m (820 kgf·cm, 59 ft·lbf)

(b) Temporarily fasten the shock absorber with the 4 nuts.

2. REMOVE AIR CLEANER ASSEMBLY

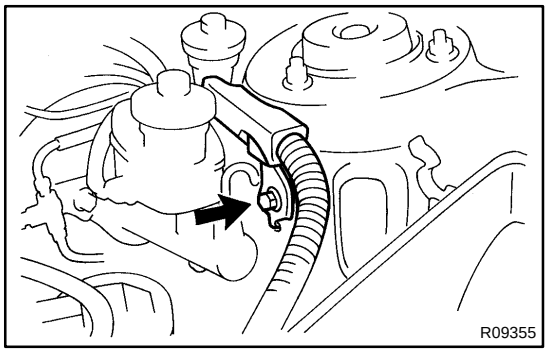

3. w/o ABS:
REMOVE WIRE HARNESS CLAMP

4. DISCONNECT LEVEL WARNING SWITCH CONNECTOR

5. DRAW OUT FLUID WITH SYRINGE

NOTICE:

Do not let brake fluid remain on a painted surface. Wash it off immediately.

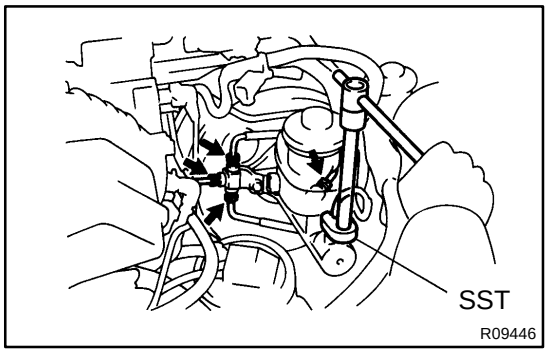

6. w/o ABS:
DISCONNECT BRAKE LINE

Using SST, disconnect the brake lines from the master cylinder and 3-way union.

SST 09023-00100

Torque: 15 N·m (155 kgf·cm, 11 ft·lbf)

7. w/ ABS:
DISCONNECT BRAKE LINE

Using SST, disconnect the brake lines from the master cylinder and 2-way union.

SST 09023-00100

Torque: 15 N·m (155 kgf·cm, 11 ft·lbf)

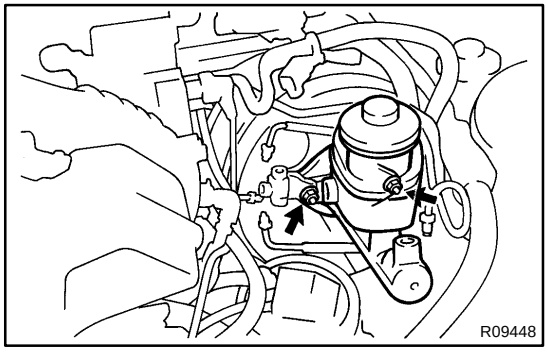

8. REMOVE MASTER CYLINDER

Remove the 2 mounting nuts and pull out the 2 or 3-way union, bracket, master cylinder and gasket.

Torque: 13 N·m (130 kgf·cm, 9 ft·lbf)

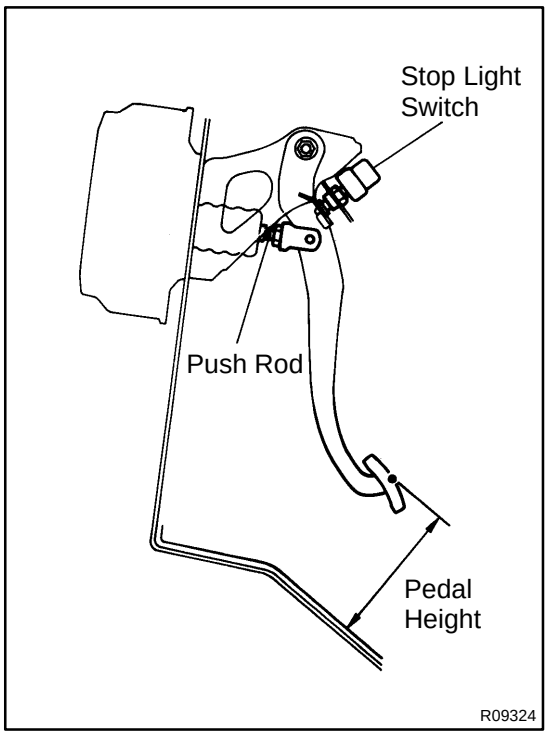

BRAKE PEDAL

BR0PZ-06

ON-VEHICLE INSPECTION

1. CHECK PEDAL HEIGHT

Pedal height from asphalt sheet:
136.1 - 146.1 mm (5.358 - 5.752 in.)

If the pedal height is incorrect, adjust it.

2. IF NECESSARY, ADJUST PEDAL HEIGHT

(a) Remove the instrument finish lower panel and heater to register No.2 duct.
(b) Disconnect the connector from the stop light switch.
(c) Loosen the stop light switch lock nut and remove the stop light switch.
(d) Loosen the push rod lock nut.
(e) Adjust the pedal height by turning the pedal push rod.
(f) Tighten the push rod lock nut.
Torque: 25 N·m (260 kgf·cm, 19 ft·lbf)
(g) Install the stop light switch.
(h) Push the brake pedal in 5 - 15 mm (0.20 - 0.59 in.), turn the stop light switch to lock the nut in the position where the stop lamp goes off.
(i) Connect the connector to the stop light switch.
(j) Push the brake pedal in 5 - 15 mm (0.20 - 0.59 in.), check that stop lamp lights up.
(k) After adjusting the pedal height, check the pedal freeplay.

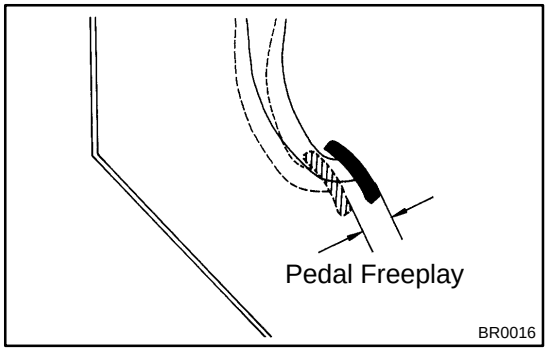

3. CHECK PEDAL FREEPLAY

(a) Stop the engine and depress the brake pedal several times until there is no more vacuum left in the booster.
(b) Push in the pedal until the beginning of the resistance is felt. Measure the distance, as shown.
Pedal freeplay: 1 - 6 mm (0.04 - 0.24 in.)

If incorrect, check the stop light switch clearance.
If the clearance is OK, then troubleshoot the brake system.

Stop light switch clearance:
0.5 - 2.4 mm (0.020 - 0.094 in.)

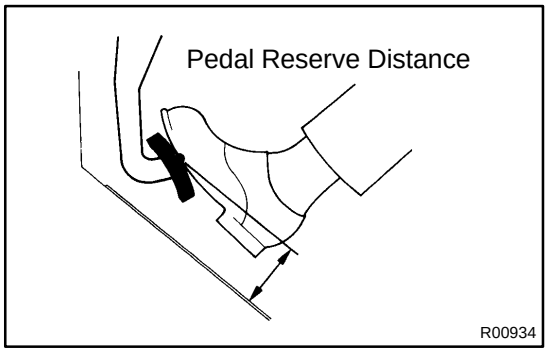

4. CHECK PEDAL RESERVE DISTANCE

(a) Release the parking brake lever.
(b) With engine running, depress the pedal and measure the pedal reserve distance, as shown.
Pedal reserve distance from asphalt sheet at 490 N (50 kgf, 110.2 lbf):
7A-FE: More than 75 mm (2.95 in.)
5S-FE: More than 80 mm (3.15 in.)

If incorrect, troubleshoot the brake system.

BRAKE SYSTEM

BR0PW-01

PRECAUTION

- **Care must be taken to replace each part properly as it could affect the performance of the brake system and result in a driving hazard. Replace the parts with parts of the same part number or equivalent.**
- **It is very important to keep parts and the area clean when repairing the brake system.**
- **If the vehicle is equipped with a mobile communication system, refer to the precaution in the IN section.**

DI545-01

CIRCUIT INSPECTION

DTC	11	Short in Squib Circuit or Front Airbag Sensor Circuit (to Ground)

CIRCUIT DESCRIPTION

The squib circuit consists of the center airbag sensor assembly, spiral cable, steering wheel pad and front passenger airbag assembly. It causes the SRS to deploy when the SRS deployment conditions are satisfied. The front airbag sensor detects the deceleration force in a frontal collision and is located in the front fender on the left and right sides.

For details of the function of each component, see FUNCTION OF COMPONENTS on page RS-2 .

DTC 11 is recorded a when ground short is detected in the squib circuit or front airbag sensor circuit.

DTC No.	DTC Detecting Condition	Trouble Area
11	• Short circuit in squib wire harness (to ground) • Squib malfunction • Short circuit in front airbag sensor +S wire harness (to ground) • Front airbag sensor malfunction • Short circuit between +S wire harness and -S wire harness of front airbag sensor • Spiral cable malfunction • Center airbag sensor assembly malfunction	• Steering wheel pad (D squib) • Front passenger airbag assembly (P squib) • Front airbag sensor • Spiral cable • Center airbag sensor assembly • Wire harness

WIRING DIAGRAM

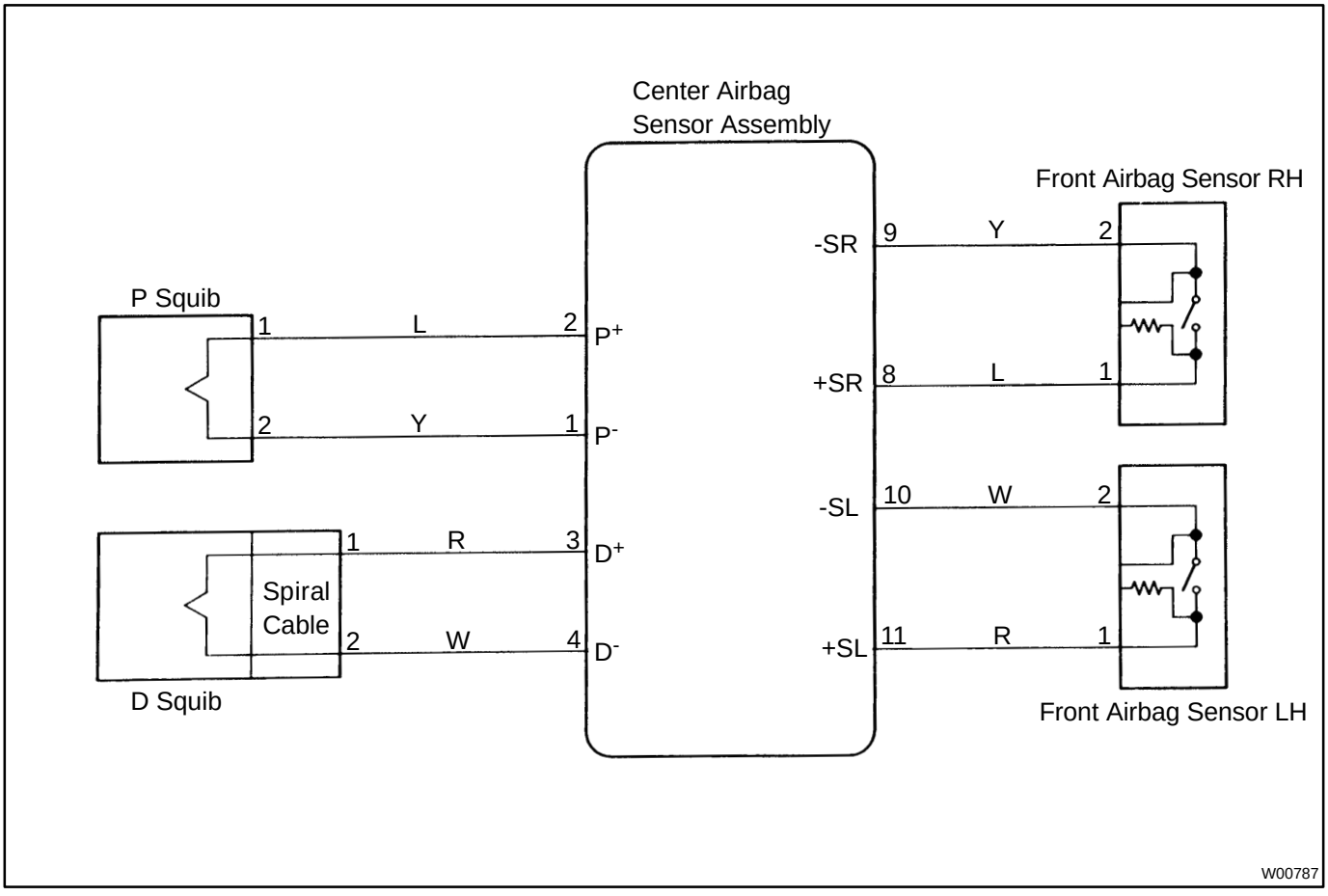

INSPECTION PROCEDURE

1	**Preparation. (See step 1 on page DI-398)**

2	**Check front airbag sensor circuit. (Measure resistance between terminals +SR and -SR, +SL and -SL of center airbag sensor assembly connector.)**

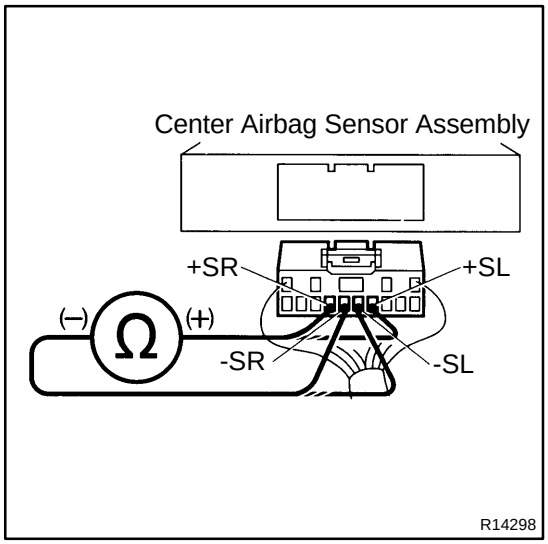

CHECK:

Measure the resistance between terminals +SR and -SR, +SL and -SL of harness side connector of center airbag sensor assembly.

OK:

Resistance: 755 Ω - 885 Ω

NG → **Go to step 9.**

OK

3	**Check front airbag sensor circuit. (Measure resistance between terminals +SR, +SL of center airbag sensor assembly connector and body ground.)**

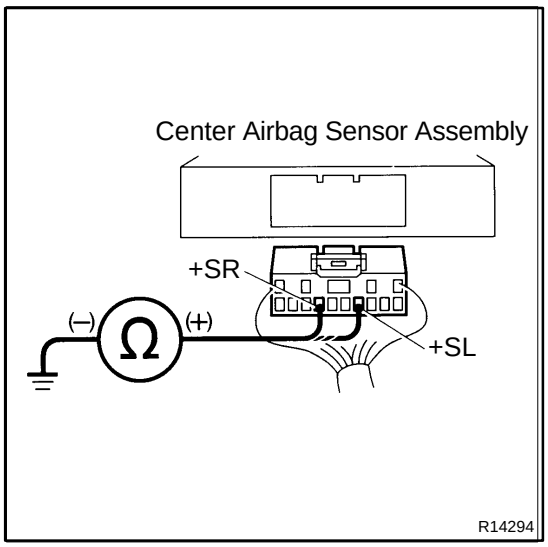

CHECK:

Measure the resistance between terminals +SR, +SL of harness side connector of center airbag sensor assembly and body ground.

OK:

Resistance: 1 MΩ or Higher

NG → **Repair or replace harness or connector between center airbag sensor assembly and front airbag sensor. (See page RS-44)**

OK

4	**Check D squib circuit.**

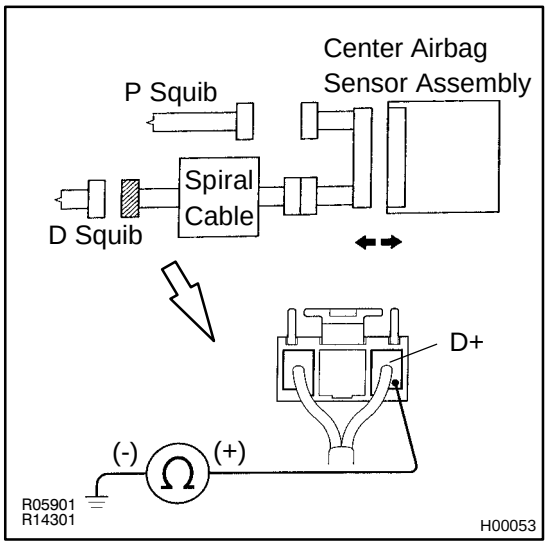

CHECK:

For the connector (on the spiral cable side) between the spiral cable and steering wheel pad, measure the resistance between D^+ and body ground.

OK:

Resistance: 1MΩ or Higher

NG → **Go to step 10.**

OK

5	Check P squib circuit.

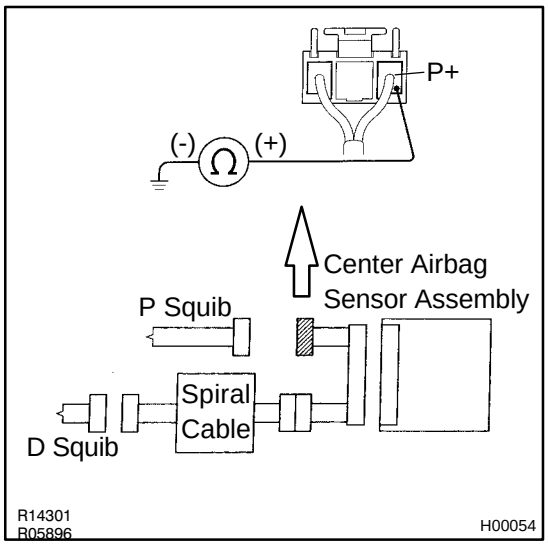

CHECK:

For the connector (on the center airbag sensor assembly side) between the center airbag sensor assembly and front passenger airbag assembly, measure the resistance between P^+ and body ground.

OK:

Resistance: 1MΩ or Higher

NG → **Repair or replace harness or connector between the center airbag sensor assembly and front passenger airbag assembly.**

OK

6	Check center airbag sensor assembly.

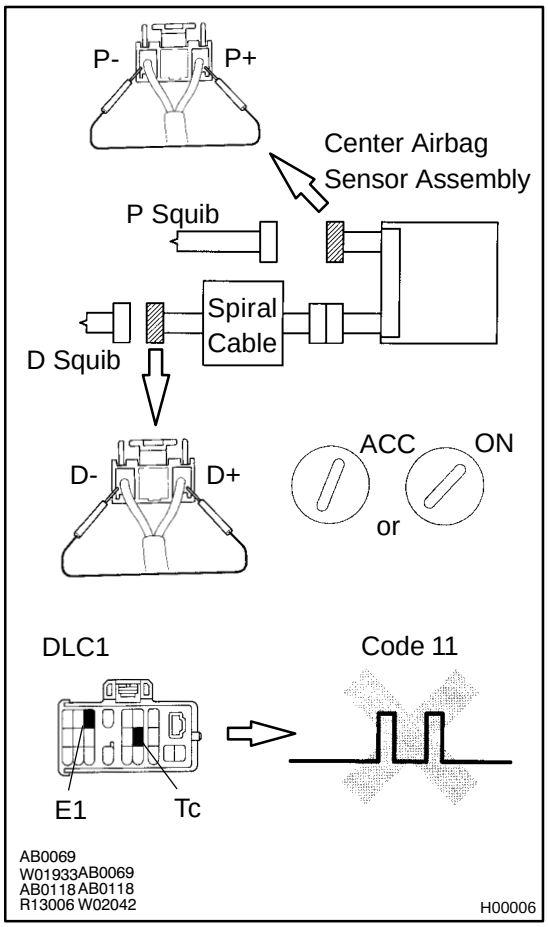

PREPARATION:

(a) Connect the connector to center airbag sensor assembly.

(b) Using a service wire, connect D^+ and D^- on spiral cable side of connector between spiral cable and steering wheel pad.

(c) Using a service wire, connect P^+ and P^- on center airbag sensor assembly side of connector between center airbag sensor assembly and front passenger airbag assembly.

(d) Connect negative (-) terminal cable to battery, and wait at least 2 seconds.

CHECK:

(a) Turn the ignition switch to ACC or ON and wait at least 20 seconds.

(b) Clear malfunction code stored in memory.
(See page DI-346)

(c) Turn the ignition switch to LOCK, and wait at least 20 seconds.

(d) Turn the ignition switch to ACC or ON, and wait at least 20 seconds.

(e) Using SST, connect the terminals Tc and E1 of DLC 1.
SST 09843-18020

(f) Check DTC

OK:

DTC 11 is not output.

HINT:

Codes other than code 11 may be output at this time, but they are not relevant to this check.

NG → **Replace center airbag sensor assembly.**

OK

7	Check D squib.

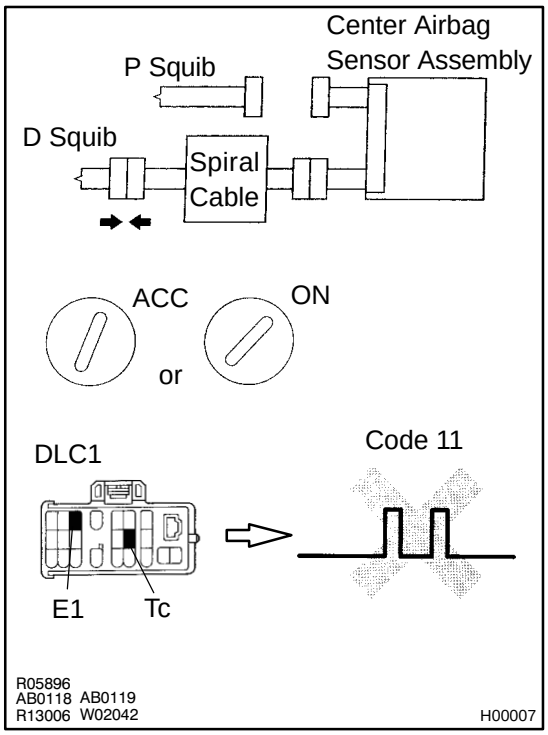

PREPARATION:

(a) Turn the ignition switch to LOCK.
(b) Disconnect negative (-) terminal cable from the battery, and wait at least 90 seconds.
(c) Connect the steering wheel pad connector.
(d) Connect negative (-) terminal cable to the battery, and wait at least 2 seconds.

CHECK:

(a) Turn the ignition switch to ACC or ON, and wait at least 20 seconds.
(b) Clear malfunction code stored in memory.
(See page DI-346)
(c) Turn the ignition switch to LOCK, and wait at least 20 seconds.
(d) Turn the ignition switch to ACC or ON, and wait at least 20 seconds.
(e) Using SST, connect the terminals Tc and E1 of DLC 1.
SST 09843-18020
(f) Check DTC.

OK:

DTC 11 is not output.

HINT:
Codes other than code 11 may be output at this time, but they are not relevant to this check.

NG → **Replace steering wheel pad.**

OK

8	**Check P squib.**

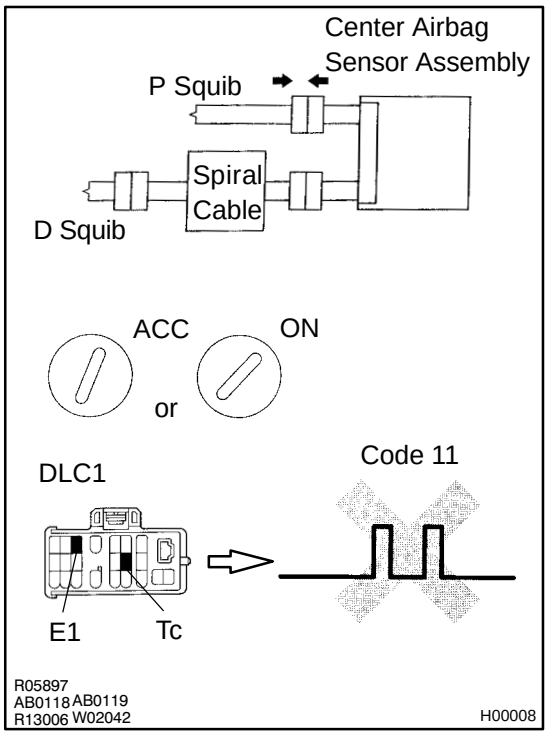

PREPARATION:

(a) Turn the ignition switch to LOCK.
(b) Disconnect negative (-) terminal cable from the battery, and wait at least 90 seconds.
(c) Connect the front passenger airbag assembly connector.
(d) Connect negative (-) terminal cable to battery, and wait at least 2 seconds.

CHECK:

(a) Turn the ignition switch to ACC or ON, and wait at least 20 seconds.
(b) Clear malfunction code stored in memory.
(See page DI-346)
(c) Turn the ignition switch to LOCK, and wait at least 20 seconds.
(d) Turn the ignition switch to ACC or ON, and wait at least 20 seconds.
(e) Using SST, connect the terminals Tc and E1 of DLC 1.
SST 09843-18020
(f) Check DTC.

OK:

DTC 11 is not output.

HINT:
Codes other than code 11 may be output at this time, but they are not relevant to this check.

NG → **Replace front passenger airbag assembly.**

OK

From the results of the above inspection, the malfunctioning part can now be considered normal. To make sure of this, use the simulation method to check. If the malfunctioning part can not be detected by the simulation method, replace all SRS components including the wire harness.

9	Check front airbag sensor.

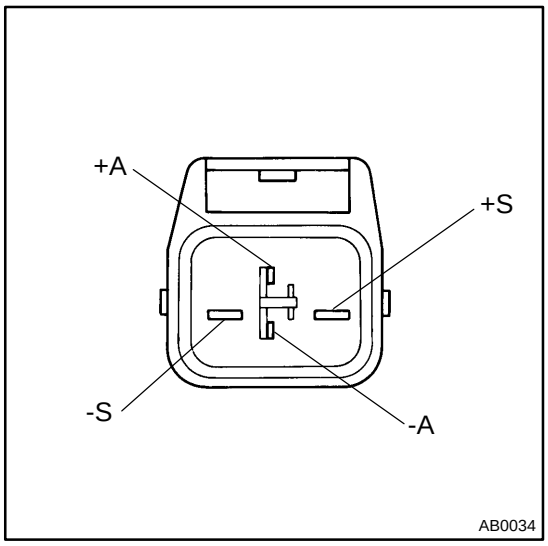

PREPARATION:

Disconnect the front airbag sensor connector.

CHECK:

Measure the resistance between each terminal of front airbag sensor.

OK:

Terminal	Resistance
⊕ S - ⊕ A	755 Ω - 885 Ω
⊕ S - ⊖ S	1 MΩ or Higher
⊖ S - ⊖ A	Less than 1 Ω

NOTICE:

- **Do not press ohmmeter probes too strongly against terminals of front airbag sensor.**
- **Make sure the front airbag sensor connector is properly connected.**

NG → **Replace front airbag sensor.**

OK

Repair or replace harness or connector between center airbag sensor assembly and front airbag sensor.

10	Check spiral cable.

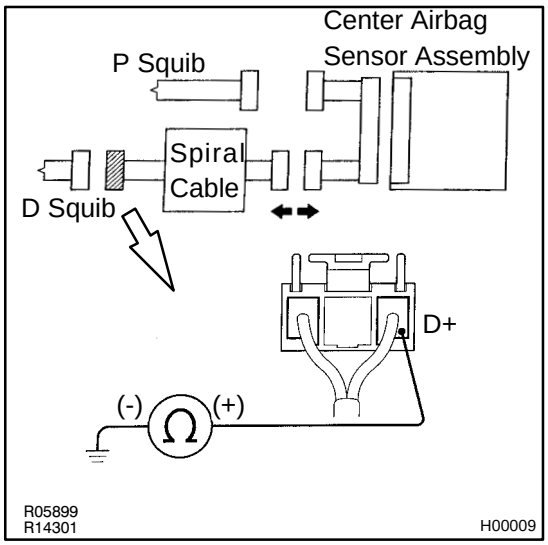

PREPARATION:

Disconnect the connector between center airbag sensor assembly and spiral cable.

CHECK:

Measure the resistance between D^+ on spiral cable side of connector between spiral cable and steering wheel pad and body ground.

OK:

Resistance: 1MΩ or Higher

NG → **Repair or replace spiral cable.**

OK

Repair or replace harness or connector between center airbag sensor assembly and spiral cable.

DI53M-02

CIRCUIT INSPECTION

DTC	11, 12	ABS Solenoid Relay Circuit

CIRCUIT DESCRIPTION

This relay supplies power to each ABS solenoid. After the ignition switch is turned ON, if the initial check is OK, the relay goes on.

DTC No.	DTC Detecting Condition	Trouble Area
11	Conditions (1) and (2) continue for 0.2 sec. or more: (1) ABS solenoid relay terminal (SR) voltage: Below 1.5 V (2) Solenoid relay monitor terminal (AST) voltage: 0 V	• ABS solenoid relay • Open or short in ABS solenoid relay circuit
12	Conditions (1) and (2) continue for 0.2 sec. or more: (1) ABS solenoid relay terminal (SR) voltage: Battery positive voltage (2) Solenoid relay monitor terminal (AST) voltage: Battery positive voltage	• ABS solenoid relay • B+ short in ABS solenoid relay circuit

Fail safe function:

If trouble occurs in the ABS solenoid relay circuit, the ECU cuts off current to the ABS solenoid relay and prohibits ABS control.

WIRING DIAGRAM

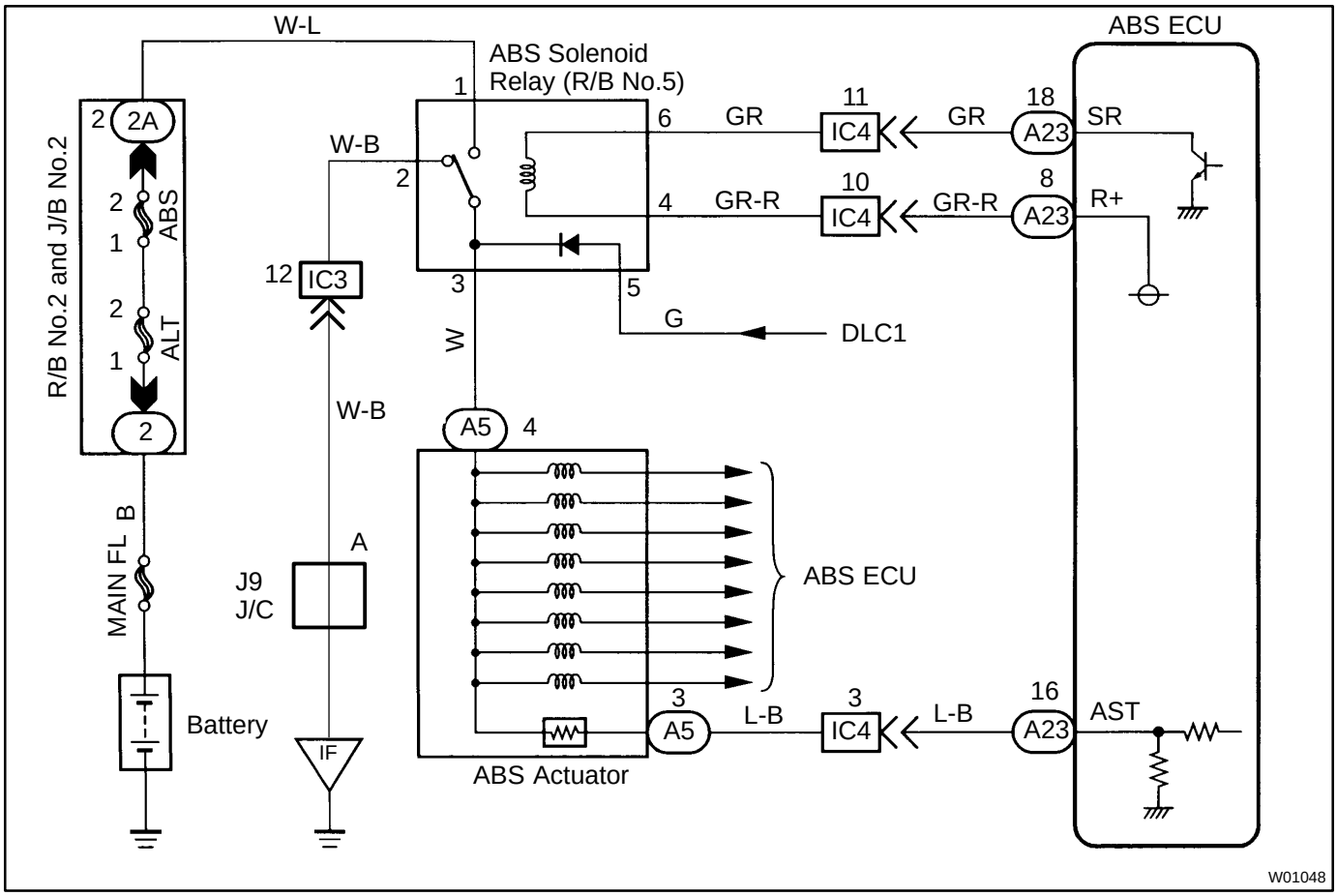

INSPECTION PROCEDURE

1	**Check voltage between terminals 1 and 2 of R/B NO.5 (for ABS solenoid relay).**

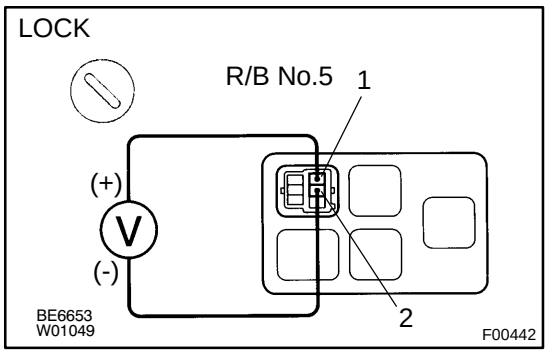

PREPARATION:
Remove ABS solenoid relay from R/B No.5.
CHECK:
Measure voltage between terminals 1 and 2 of R/B No.5 (for ABS solenoid relay).
OK:
Voltage: 10 - 14 V

NG → **Check and repair harness or connector.**

OK

2	**Check continuity between terminals 3 of R/B No.5 (for ABS solenoid relay) and A5 - 4, A5 - 4 and A5 - 3, A5 - 3 and A23 - 16.**

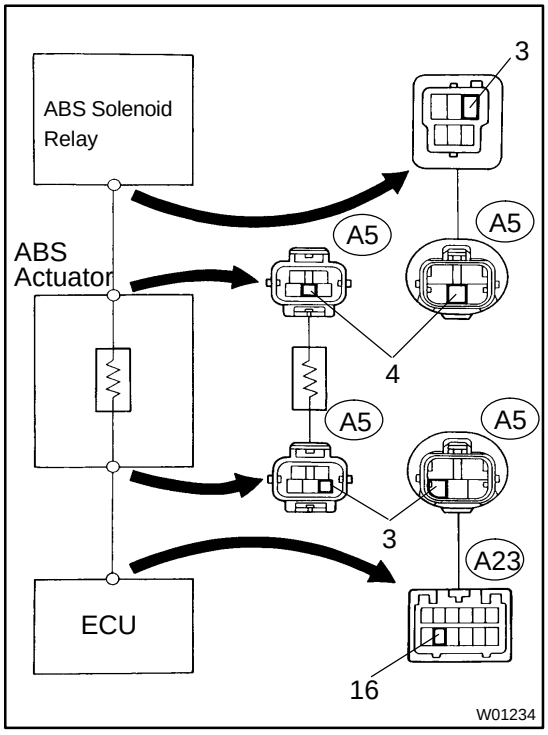

CHECK:
Check continuity between terminals 3 of R/B No.5 (for ABS solenoid relay) and A5 - 4, A5 - 4 and A5 - 3, A5 - 3 and A23 - 16.
OK:
Continuity
HINT:
There is a resistance of 32 - 34 Ω between terminals A5 - 4 and A5 - 3.

NG → **Repair or replace harness or ABS actuator.**

OK

3	Check ABS solenoid relay.

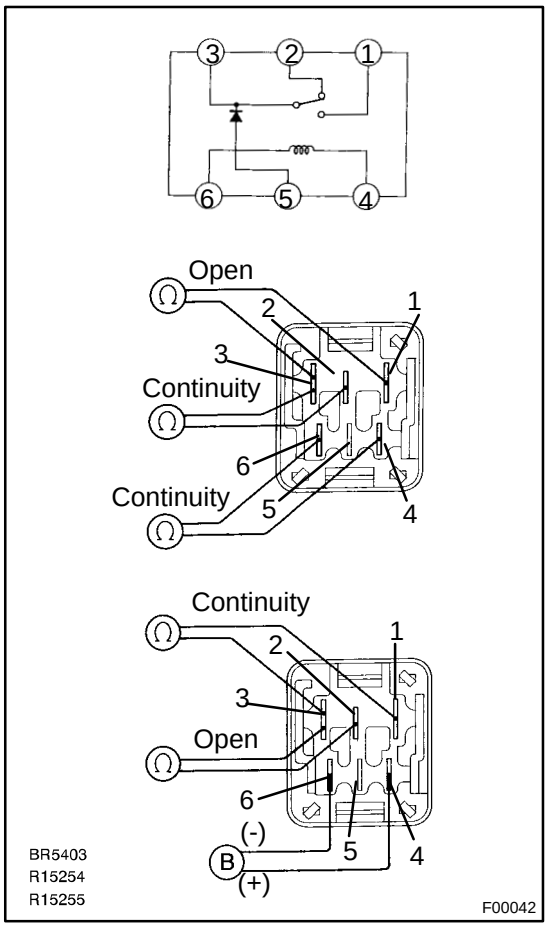

PREPARATION:

Remove solenoid relay from R/B No.5.

CHECK:

Check continuity between each terminal of ABS solenoid relay.

OK:

Terminals 4 and 6	Continuity (Reference value 80 Ω)
Terminals 2 and 3	Continuity
Terminals 1 and 3	Open

CHECK:

(a) Apply battery positive voltage between terminals 4 and 6.

(b) Check continuity between each terminal of ABS solenoid relay.

OK:

Terminals 2 and 3	Open
Terminals 1 and 3	Continuity

NG → **Replace ABS control relay.**

OK ↓

4	Check for open and short in harness and connector between ABS solenoid relay and ABS ECU (See page IN-28).

NG → **Repair or replace harness or connector.**

OK ↓

If the same code is still output after the DTC is deleted, check the contact condition of each connection. If the connections are normal, the ECU may be defective.

DI54P-02

CIRCUIT INSPECTION

DTC	11, 14	Actuator Motor Circuit

CIRCUIT DESCRIPTION

The actuator motor is operated by signals from the ECU. Acceleration and deceleration signals are transmitted by changes in the Duty Ratio (See note below).

Duty Ratio

The duty ratio is the ratio of the period of continuity in one cycle. For example, if A is the period of continuity in one cycle, and B is the period of non-continuity, then.

$$\text{Duty Ratio} = \frac{A}{A + B} \times 100\ (\%)$$

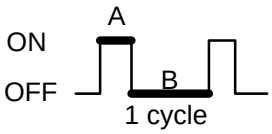

DTC No.	Detection Item	Trouble Area
11	• Short in motor circuit.	• Cruise control actuator motor • Harness or connector between actuator motor and ECU. • ECU
14	• Open in actuator motor circuit.	

WIRING DIAGRAM

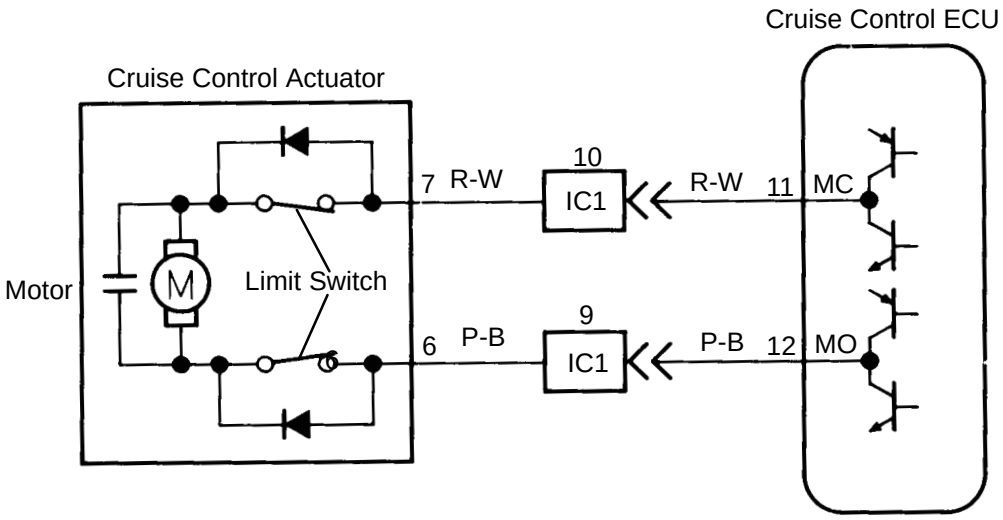

N07458

INSPECTION PROCEDURE

1	Check actuator motor.

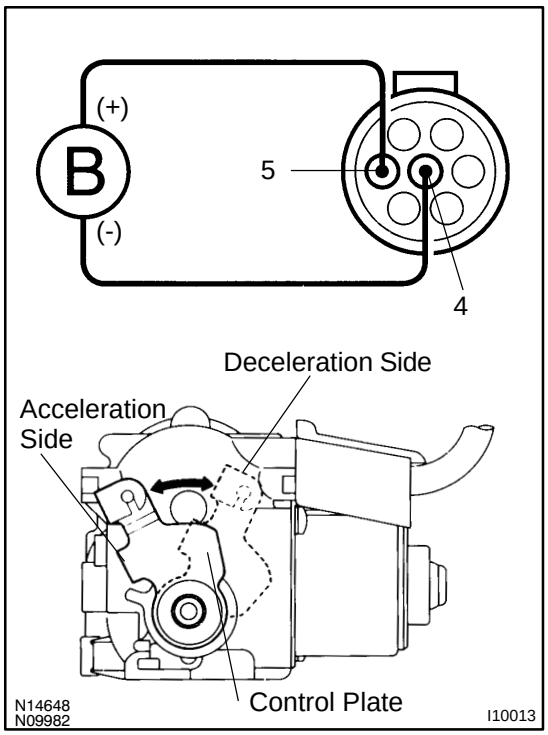

PREPARATION:

(a) Remove cruise control actuator.

(b) Disconnect actuator connector.

CHECK:

(a) Connect positive ⊕ lead to terminal 5 and negative ⊖ lead to terminal 4 of actuator connector.
(Magnetic clutch ON)

NOTICE:

Do not connect the high tension cables to the wrong battery terminal.

You will damage the cruise control actuator.

(b) When battery positive voltage is applied to each of the actuator connector terminals check that the control plate moves smoothly without hesitating.

Moving direction	Terminal No. to continuity
Acceleration side	Positive ⊕ to 6 Negative ⊖ to 7
Deceleration side	Positive ⊕ to 7 Negative ⊖ to 6

(c) With the motor rotating as in 2., check that the motor is stopped by limit switches when the control plate moves to fully opened or fully closed position.

NG → **Replace actuator assembly.**

OK

2	Check harness and connector between cruise control ECU and actuator motor (See page IN-28).

NG → **Repair or replace harness or connector.**

OK

Proceed to next circuit inspection shown on matrix chart (See page DI-421).
However, when DTC 11, 23 is displayed, check and replace cruise control ECU.

DI54Q-01

DTC	12	Actuator Magnetic Clutch Circuit

CIRCUIT DESCRIPTION

This circuit turns on the magnetic clutch inside the actuator during cruise control operation according to the signal from the ECU. If a malfunction occurs in the actuator or vehicle speed sensor, etc. during cruise control, the rotor shaft between the motor and control plate is released.
When the brake pedal is depressed, the stop light switch turns on, supplying electrical power to the stop light. Power supply to the magnetic clutch is mechanically cut and the magnetic clutch is turned OFF.
When driving downhill, if the vehicle speed exceeds the set speed by 15 km/h (9 mph), the ECU turns the magnet clutch OFF. If the vehicle speed later drops to within 10 km/h (6 mph) above the set speed, then cruise control at the set speed is resumed.

DTC No.	DTC Detecting Condition	Trouble Area
12	• Short in magnetic clutch circuit. • Open (0.8 sec.) in magnetic clutch circuit.	• Cruise control magnetic clutch. • Harness or connector between ECU and magnetic clutch, magnetic clutch and body ground. • ECU • STOP Fuse

WIRING DIAGRAM

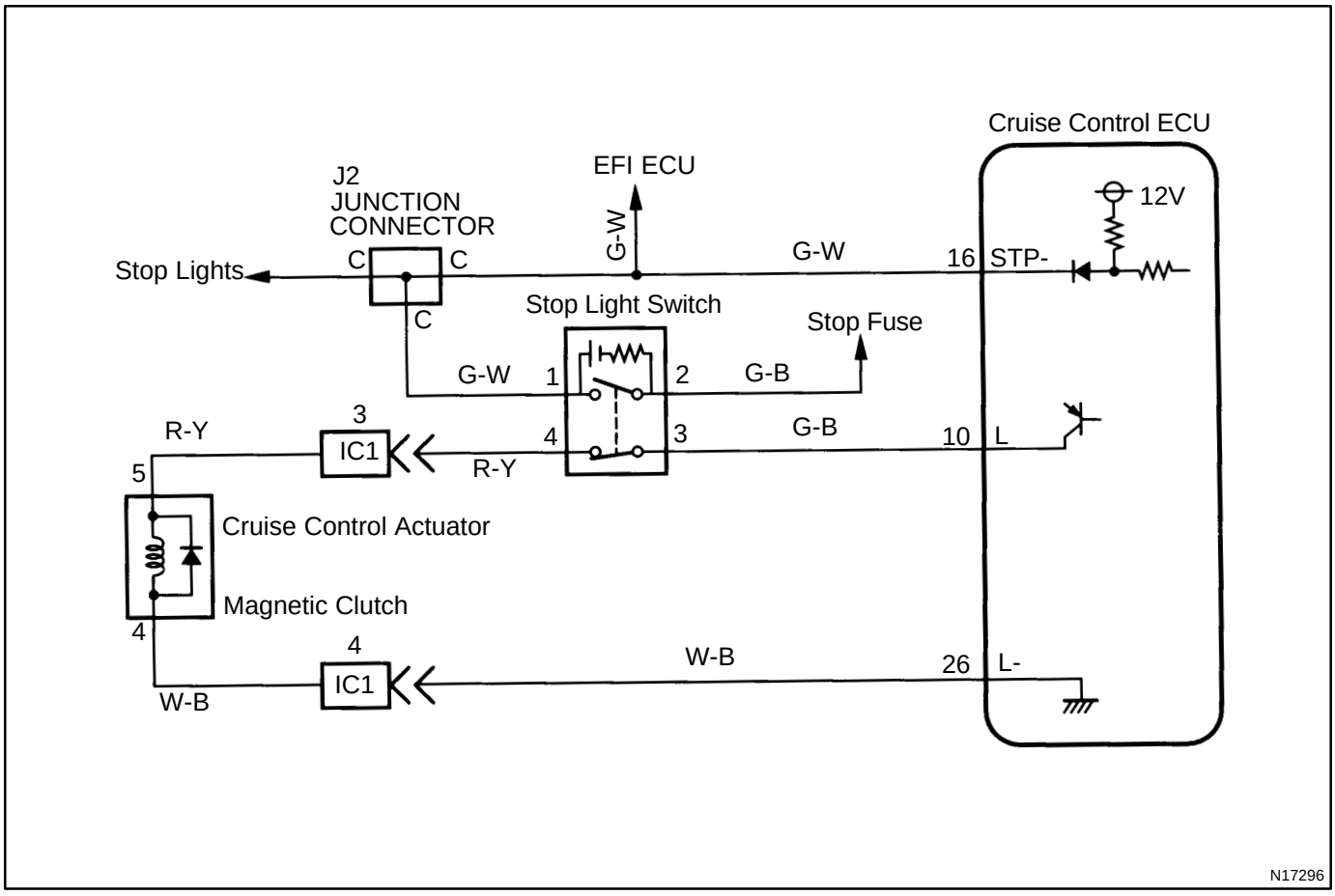

INSPECTION PROCEDURE

1	**Check STOP fuse.**

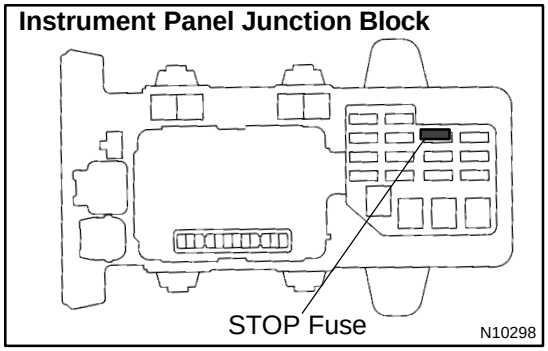

PREPARATION:
Remove STOP fuse from instrument Panel Junction Block.
CHECK:
Check continuity of STOP fuse.
OK:
Continuity

NG → **Check for short in all the harness and components connected to the STOP fuse (See attached wiring diagram).**

OK

2	**Check actuator magnetic clutch.**

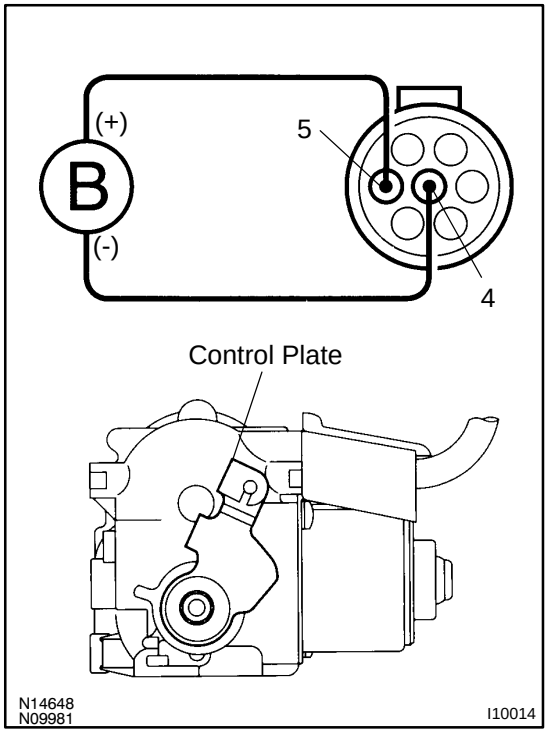

PREPARATION:
(a) Remove cruise control actuator.
(b) Disconnect actuator connector.
CHECK:
Move the control plate by hand.
OK:
Control plate moves (Magnetic clutch off)
CHECK:
(a) Connect positive ⊕ lead to terminal 5 and negative ⊖ lead to terminal 4 of actuator connector.
(b) Move the control plate by hand.
NOTICE:
Do not connect the high tension cables to the wrong battery terminal.
You will damage the cruise control actuator.
OK:
Control plate does not move. (Magnetic clutch on)

NG → **Replace actuator assembly.**

OK

3	Check stop light switch.

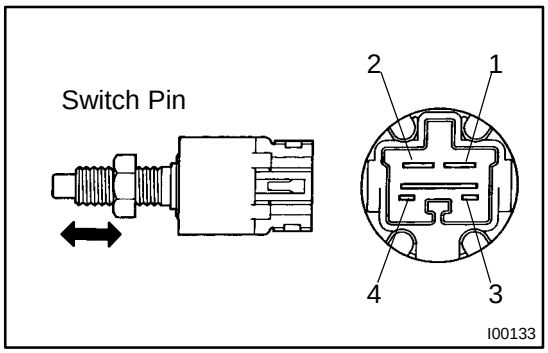

PREPARATION:

Disconnect the stop light switch connector.

CHECK:

Check continuity between terminals.

Switch position	Continuity
Switch pin free (Brake pedal depressed)	1 - 2
Switch pin pushed in (Brake pedal released)	3 - 4

NG → **Replace stop light switch.**

OK

4	Check for open and short in harness and connectors between ECU and stop light switch, stop light switch and magnetic clutch, magnetic clutch and body ground (See page IN-28).

NG → **Repair or replace harness or connector.**

OK

Proceed to next circuit inspection shown on matrix chart (See page DI-421).
However, when DTC 12 is displayed, check harness and connector for loose connection.
If connection is normal, check and replace ECU.

DI546-02

DTC	12	Short in Squib Circuit (to B+)

CIRCUIT DESCRIPTION

The squib circuit consists of the center airbag sensor assembly, spiral cable, steering wheel pad and front passenger airbag assembly. It causes the SRS to deploy when the SRS deployment conditions are satisfied. The front airbag sensor detects the deceleration force in frontal collision and is located in the front fender on the left and right sides.
For details of the function of each component, see page FUNCTION OF COMPONENTS on page RS-2 .
DTC 12 is recorded when a B+ short is detected in the squib circuit or front airbag sensor circuit.

DTC No.	DTC Detecting Condition	Trouble Area
12	• Short circuit in squib wire harness (to B+) • Squib malfunction • Short circuit in front airbag sensor +S wire harness (to +B) • Open circuit in RH and LH front airbag sensor harness • Spiral cable malfunction • Center airbag sensor assembly malfunction	• Steering wheel pad (D squib) • Front passenger airbag assembly (P squib) • Front airbag sensor • Spiral cable • Center airbag sensor assembly • Wire harness

WIRING DIAGRAM

Refor to Page DI-355 for the WIRING DIAGRAM.

INSPECTION PROCEDURE

1	**Preparation. (See step 1 on page DI-398)**

2	**Check front airbag sensor circuit (Measure resistance between terminals +SR and -SR, +SL and -SL of center airbag sensor assembly connector) (See step on page DI-398)**

NG → **Go to Code 15. (See page DI-382)**

OK

3	**Check front airbag sensor circuit. (Measure voltage between terminals +SR or +SL of center airbag sensor assembly connector and body ground)**

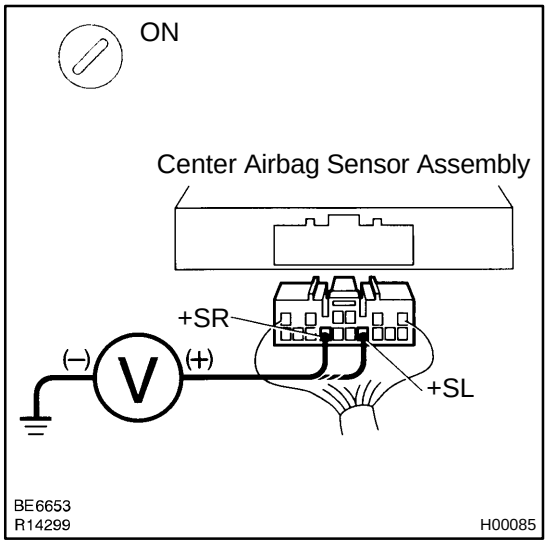

PREPARATION:

(a) Connect negative (-) terminal cable to battery.

(b) Turn the ignition switch ON.

CHECK:

Measure the voltage between terminals +SR or +SL of harness side connector of center airbag sensor assembly and body ground.

OK:

Voltage: 0 - 0.1 V

NG → **Repair or replace harness or connector between center airbag sensor assembly and front airbag sensor.**

OK

4	**Check D squib circuit.**

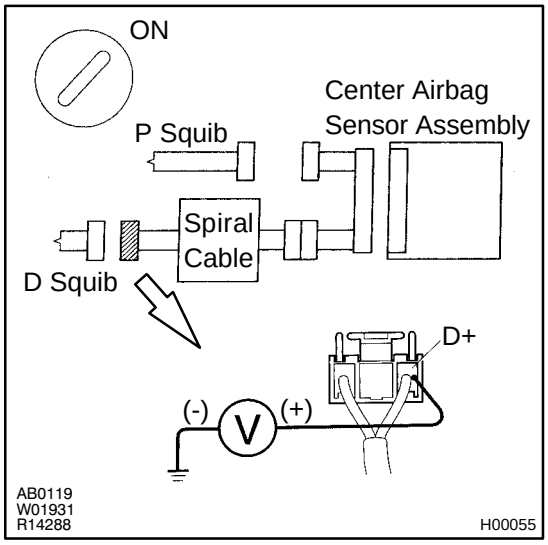

CHECK:

For the connector (on the spiral cable side) between the spiral cable and steering wheel pad, measure the voltage between D^+ and body ground.

OK:

Voltage: 0 V

NG → **Go to step 9.**

OK

5	Check P squib circuit.

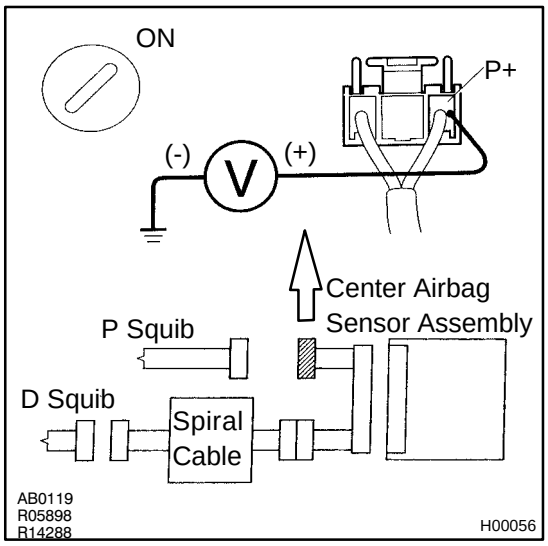

CHECK:

For the connector (on the center airbag sensor assembly side) between center airbag sensor assembly and front passenger airbag assembly, measure the voltage between P^+ and body ground.

OK:

Voltage: 0 V

NG → **Repair or replace harness or connector between the center airbag sensor assembly and front passenger airbag assembly.**

OK

6	Check center airbag sensor assembly.

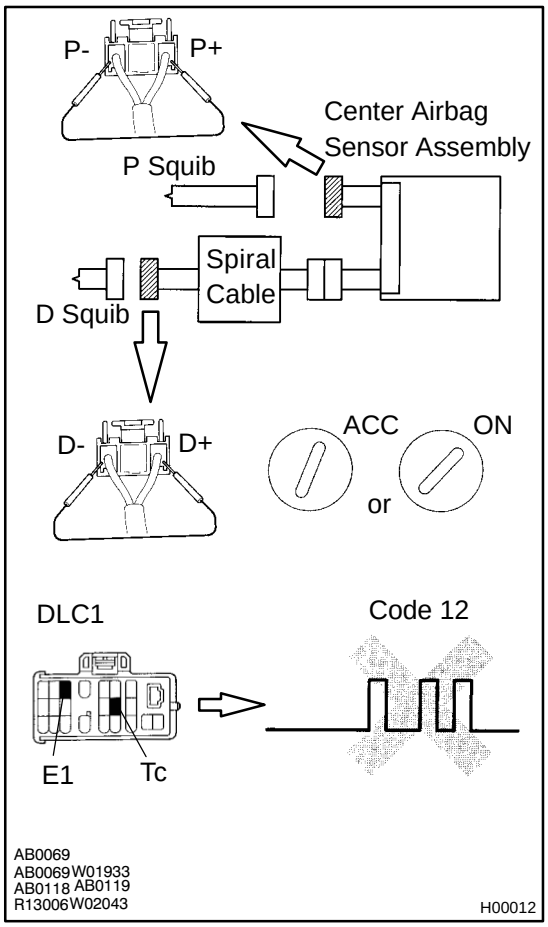

PREPARATION:

(a) Connect the connector to center airbag sensor assembly.

(b) Using a service wire, connect D^+ and D^- on spiral cable side of connector between spiral cable and steering wheel pad.

(c) Using a service wire, connect P^+ and P^- on center airbag sensor assembly side of connector between center airbag sensor assembly and front passenger airbag assembly.

(d) Connect negative (-) terminal cable to battery, and wait at least 2 seconds.

CHECK:

(a) Turn the ignition switch to ACC or ON and wait at least 20 seconds.

(b) Clear malfunction code stored in memory.
(See page DI-346)

(c) Turn the ignition switch to LOCK, and wait at least 20 seconds.

(d) Turn the ignition switch to ACC or ON, and wait at least 20 seconds.

(e) Using SST, connect the terminals Tc and E1 of DLC1.
SST 09843-18020

(f) Check DTC.

OK:

DTC 12 is not output.

HINT:

Codes other than code 12 may be output at this time, but they are not relevant to this check.

NG → **Replace center airbag sensor assembly.**

OK

7	Check D squib.

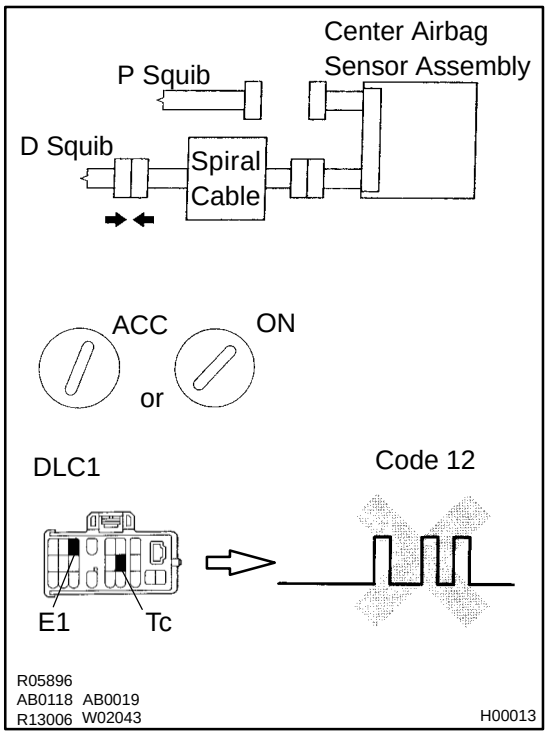

PREPARATION:

(a) Turn the ignition switch to LOCK.
(b) Disconnect negative (-) terminal cable from the battery, and wait at least 90 seconds.
(c) Connect the steering wheel pad connector.
(d) Connect negative (-) terminal cable to battery, and wait at least 2 seconds.

CHECK:

(a) Turn the ignition switch to ACC or ON, and wait at least 20 seconds.
(b) Clear malfunction code stored in memory.
(See page DI-346)
(c) Turn the ignition switch to LOCK, and wait at least 20 seconds.
(d) Turn the ignition switch to ACC or ON, and wait at least 20 seconds.
(e) Using SST, connect the terminals Tc and E1 of DLC1.
SST 09843-18020
(f) Check DTC.

OK:

DTC 12 is not output.

HINT:
Code other than code 12 may be output at this time, but they are not relevant to this check.

NG → **Replace steering wheel pad.**

OK

8	**Check P squib.**

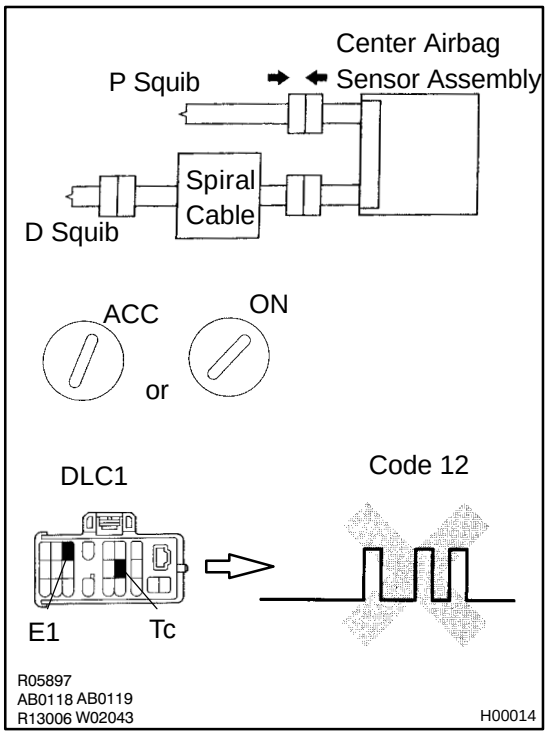

PREPARATION:

(a) Turn the ignition switch to LOCK.
(b) Disconnect negative (-) terminal cable from the battery, and wait at least 90 seconds.
(c) Connect the front passenger airbag assembly connector.
(d) Connect negative (-) terminal cable to battery, and wait at least 2 seconds.

CHECK:

(a) Turn the ignition switch to ACC or ON, and wait at least 20 seconds.
(b) Clear malfunction code stored in memory.
(See page DI-346)
(c) Turn the ignition switch to LOCK, and wait at least 20 seconds.
(d) Turn the ignition switch to ACC or ON, and wait at least 20 seconds.
(e) Using SST, connect the terminals Tc and E1 of DLC1.
SST 09843-18020
(f) Check DTC.

OK:

DTC 12 is not output.

HINT:
Codes other than code 12 may be output at this time, but they are not relevant to this check.

NG → **Replace front passenger airbag assembly.**

OK

From the results of the above inspection, the malfunctioning part can now be considered normal. To make sure of this, use the simulation method to check.

9	**Check spiral cable.**

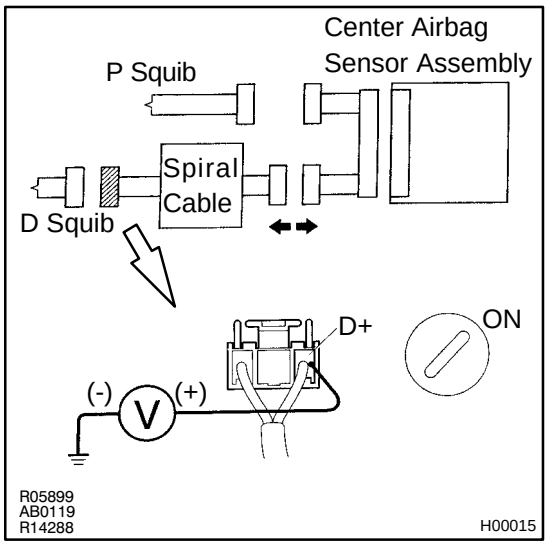

PREPARATION:

(a) Turn the ignition switch to LOCK.
(b) Disconnect the connector between center airbag sensor assembly and spiral cable.
(c) Turn the ignition switch ON.

CHECK:

Measure the voltage at D^+ on spiral cable side of connector between spiral cable and steering wheel.

OK:

Voltage: 0 V

NG → **Repair or replace spiral cable.**

OK

Repair or replace harness or connector between center airbag sensor assembly and spiral cable.

DI547-01

DTC	13	Short in D Squib Circuit

CIRCUIT DESCRIPTION

The D squib circuit consists of the center airbag sensor assembly, spiral cable and steering wheel pad. It causes the airbag to deploy when the aribag deployment conditions are satisfied.
For details of the function of each component, see FUNCTION OF COMPONENTS on page RS-2 .
DTC 13 is recorded when a short is detected in the D squib circuit.

DTC No.	DTC Detecting Condition	Trouble Area
13	• Short circuit between D^+ wire harness and D^- wire harness of squib • D squib malfunction • Spiral cable malfunction • Center airbag sensor assembly malfunction	• Steering wheel pad (D squib) • Spiral cable • Center airbag sensor assembly • Wire harness

WIRING DIAGRAM

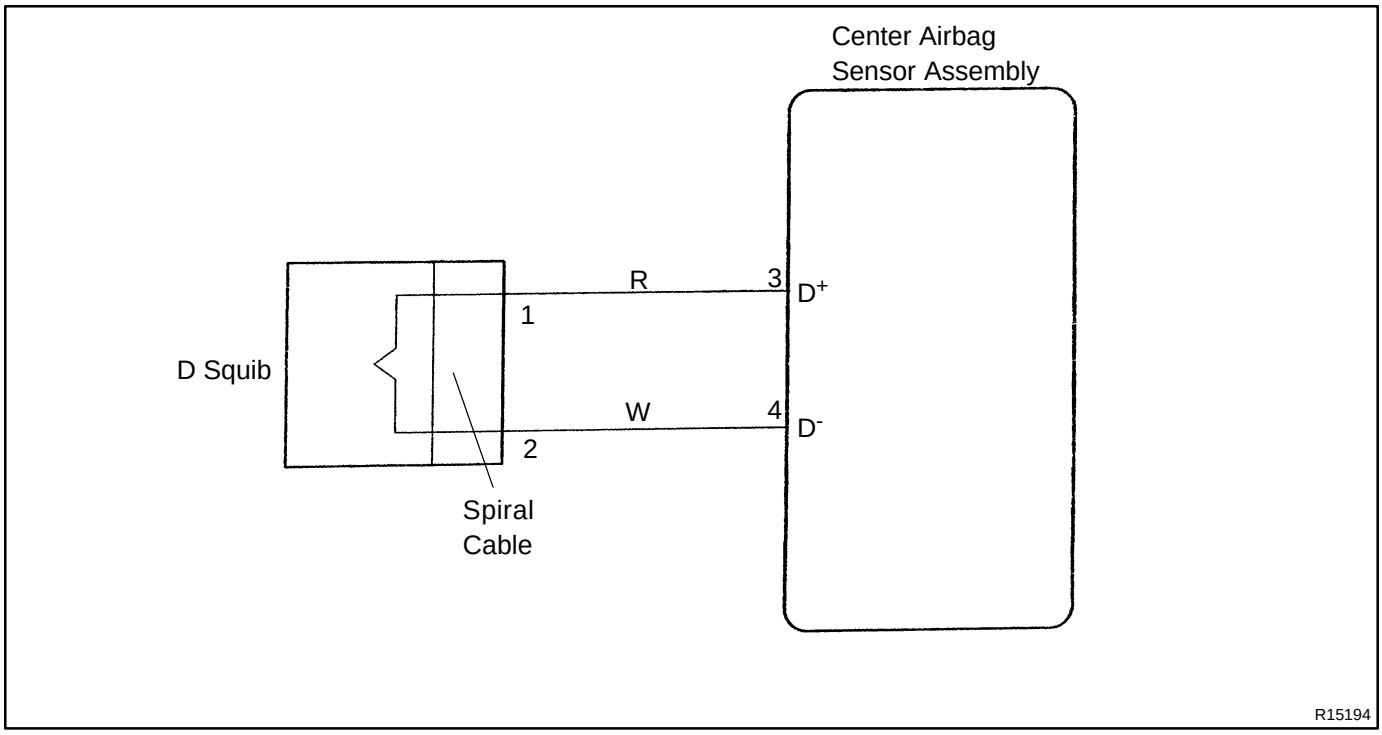

INSPECTION PROCEDURE

1	**Preparation. (See step 1 on page DI-398)**

2	**Check D squib circuit.**

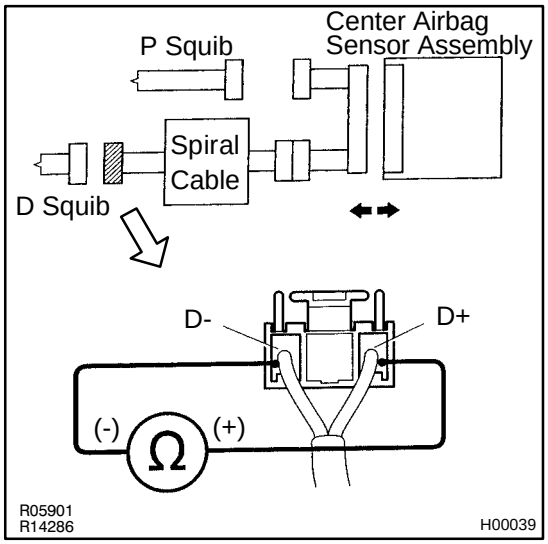

PREPARATION:
Release airbag activation prevention mechanism on center airbag sensor assembly side of airbag squib connector.
(See page DI-346)

CHECK:
For the connector (on the spiral cable side) between the spiral cable and steering wheel pad, measure the resistance between D^+ and D^-.

OK:

Resistance: 1 MΩ or Higher

NG → **Go to step 5.**

OK

3	Check center airbag sensor assembly.

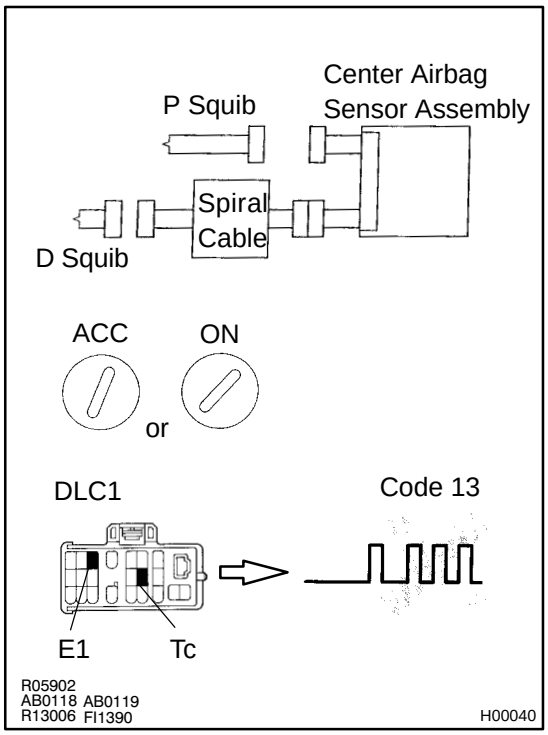

PREPARATION:

(a) Connect the connector to center airbag sensor assembly.
(b) Connect negative (-) terminal cable to battery, and wait at least 2 seconds.

CHECK:

(a) Turn the ignition switch to ACC or ON and wait at least 20 seconds.
(b) Clear malfunction code stored in memory.
(See page DI-346)
(c) Turn the ignition switch to LOCK, and wait at least 20 seconds.
(d) Turn the ignition switch to ACC or ON, and wait at least 20 seconds.
(e) Using SST, connect the terminals Tc and E1 of DLC 1.
SST 09843-18020
(f) Check DTC.

OK:

DTC 13 is not output.

HINT:

Codes other than code 13 may be output at this time, but they are not relevant to this check.

NG → **Replace center airbag sensor assembly.**

OK

4	Check D squib.

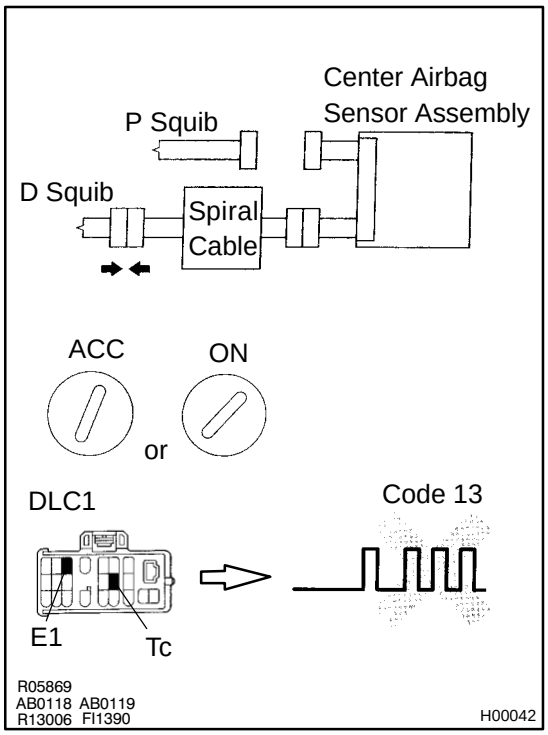

PREPARATION:

(a) Turn the ignition switch to LOCK.
(b) Disconnect negative (-) terminal cable from the battery, and wait at least 90 seconds.
(c) Connect the steering wheel pad connector.
(d) Connect negative (-) terminal cable to battery,and wait at least 2 seconds.

CHECK:

(a) Turn the ignition switch to LOOK, and wait at least 20 seconds.
(b) Turn the ignition switch to ACC or ON, and wait at least 20 seconds.
(c) Clear malfunction code stored in memory.
(See page DI-346)
(d) Turn the ignition switch to LOCK, and wait at least 20 seconds.
(e) Turn the ignition switch to ACC or ON, and wait at least 20 seconds.
(f) Using SST, connect the terminals Tc and E1 of DLC 1.
SST 09843-18020
(g) Check DTC.

OK:

DTC 13 is not output.

HINT:
Codes other than code 13 may be output at this time, but they are not relevant to this check.

NG → **Replace steering wheel pad.**

OK

From the results of the above inspection, the malfunctioning part can now be considered normal. To make sure of this, use the simulation method to check.

5	Check spiral cable.

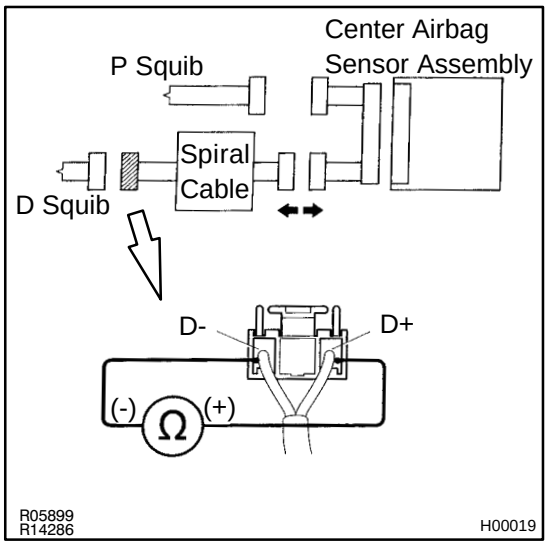

PREPARATION:

(a) Disconnect the connector between center airbag sensor assembly and spiral cable.

(b) Release airbag activation prevention mechanism on center airbag sensor assembly side of airbag squib connector (See page DI-346).

CHECK:

For the connector (on the spiral cable side) between the spiral cable and steering wheel pad, measure the resistance between D^+ and D^-.

OK:

Resistance: 1 MΩ or Higher

NG → **Repair or replace spiral cable.**

OK

6	Check harness between center airbag sensor assembly and spiral cable.

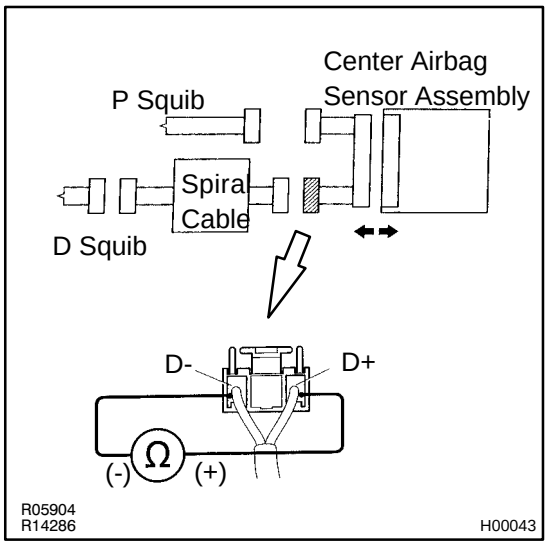

PREPARATION:

Release airbag activation prevention mechanism on center airbag sensor assembly connector.

(See page DI-346)

CHECK:

For the connector (on the center airbag sensor assembly side) between the spiral cable and center airbag sensor assembly, measure the resistance between D^+ and D^-.

OK:

Resistance: 1 MΩ or Higher

NG → **Repair or replace harness or connector between center airbag sensor assembly and spiral cable.**

OK

From the results of the above inspection, the malfunctioning part can now be considered normal. To make sure of this, use the simulation method to check.

DI53N-02

DTC	13, 14	ABS Motor Relay Circuit

CIRCUIT DESCRIPTION

The ABS motor relay supplies power to the ABS pump motor. While the ABS activated, the ECU switches the motor relay ON and operates the ABS pump motor.

DTC No.	DTC Detecting Condition	Trouble Area
13	Conditions (1) and (2) continued for 0.2 sec. or more: (1) ABS motor relay terminal (MR) voltage: Below 1.0 V (2) Motor relay monitor terminal (MT) voltage: 0 V	• ABS motor relay • Open or short in ABS motor relay circuit
14	Conditions (1) and (2) continued for 2.5 sec. or more: (1) ABS motor relay terminal (MR) voltage: Battery positive voltage (2) Motor relay monitor terminal (MT) voltage: Battery positive voltage	• ABS motor relay • B+ short in ABS motor relay circuit

Fail safe function:
If trouble occurs in the ABS motor relay circuit, the ECU cuts off current to the ABS solenoid relay and prohibits ABS control.

WIRING DIAGRAM

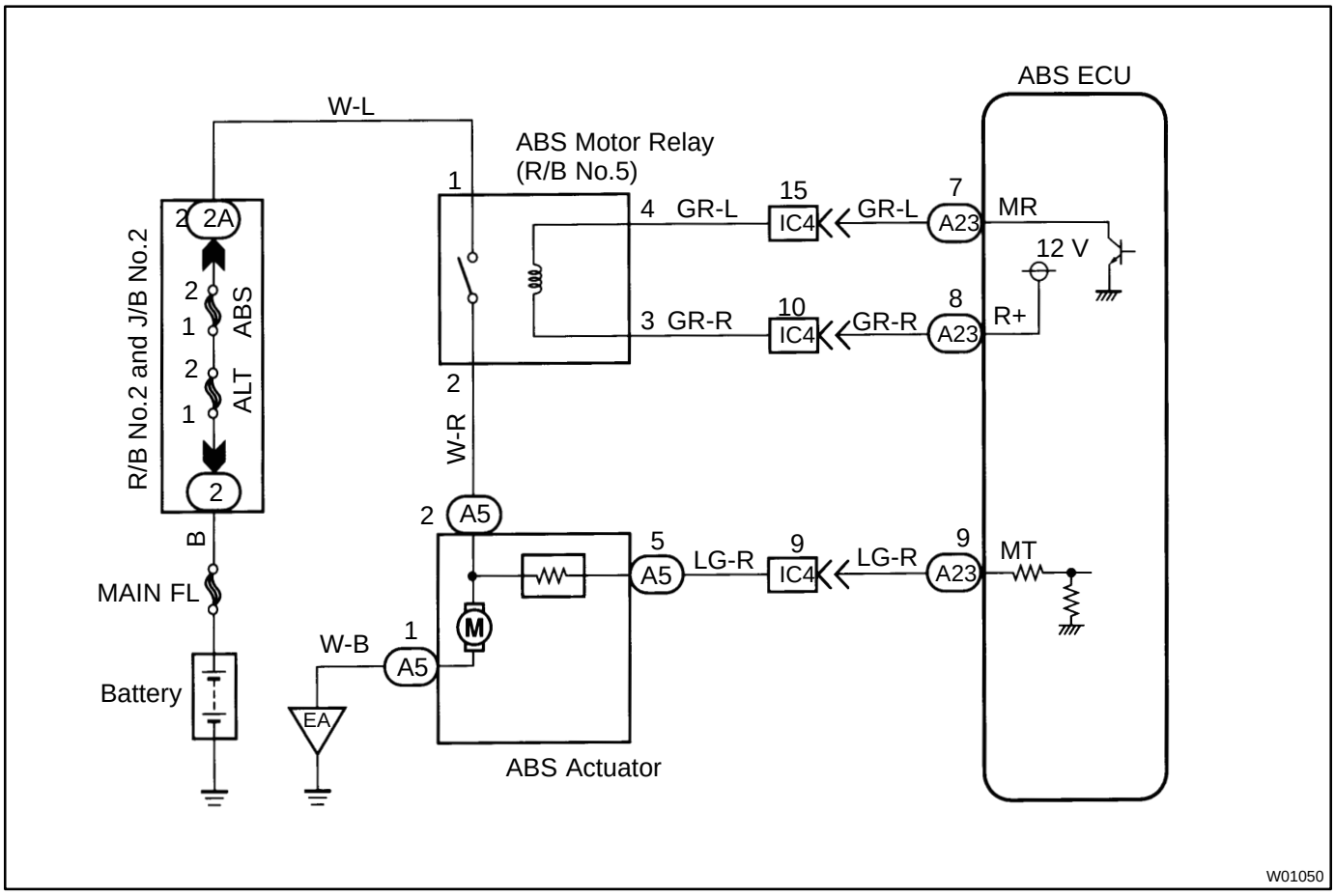

INSPECTION PROCEDURE

1	**Check voltage between terminal 1 of R/B No.5 (for ABS motor relay) and body ground.**

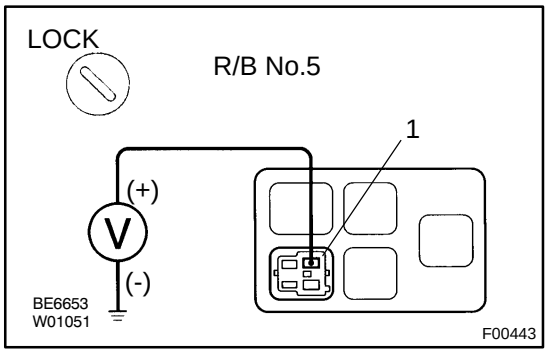

PREPARATION:
Remove ABS motor relay from R/B No.5.
CHECK:
Measure voltage between terminal 1 of R/B No.5 (for ABS motor relay) and body ground.
OK:

Voltage: 10 - 14 V

NG → **Check and repair harness or connector.**

OK

2	**Check continuity between terminal 2 of R/B No.5 (for ABS motor relay) and A5 - 2, A5 - 2 and A5 - 5, A5 - 5 and A23 - 9.**

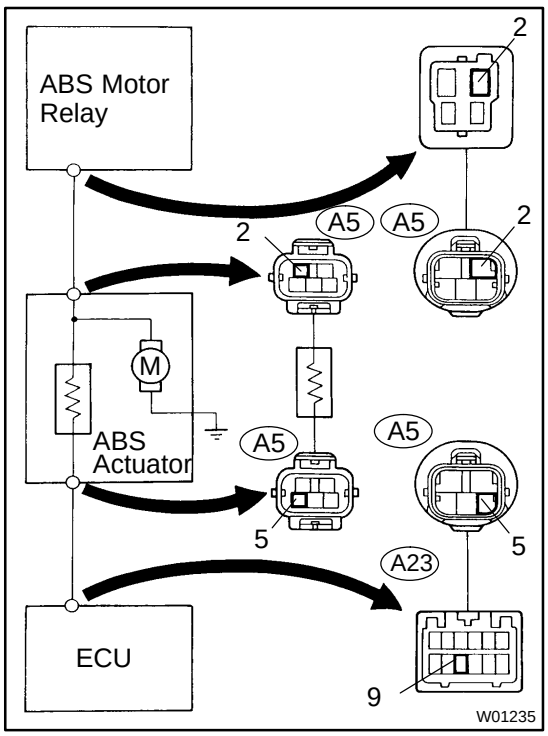

CHECK:
Check continuity between terminal 2 of R/B No.5 (for ABS motor relay) and A5 - 2, A5 - 2 and A5 - 5, A5 - 5 and A23 - 9.
OK:

Continuity

HINT:
There is a resistance of 4 - 6 Ω between terminals A5 - 2 and A5 - 5 of ABS actuator.

NG → **Repair or replace harness or ABS actuator.**

OK

3	Check ABS motor relay.

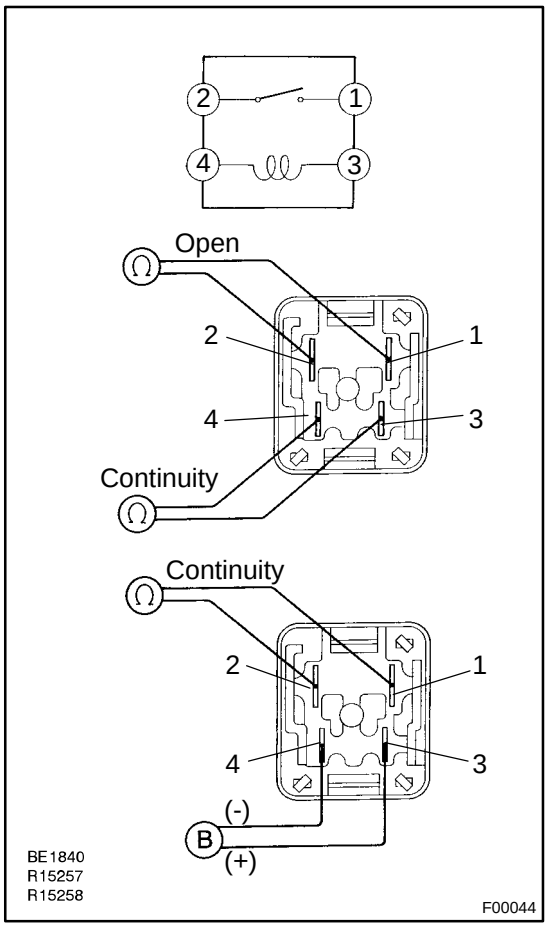

PREPARATION:

Remove motor relay from R/B No.5.

CHECK:

Check continuity between each terminal of motor relay.

OK:

Terminals 3 and 4	Continuity (Reference value 62 Ω)
Terminals 1 and 2	Open

CHECK:

(a) Apply battery positive voltage between terminals 3 and 4.

(b) Check continuity between terminal.

OK:

Terminals 1 and 2	Continuity

NG → **Replace ABS motor relay.**

OK

4	Check for open and short in harness and connector between ABS motor relay and ABS ECU (See page IN-28).

NG → **Repair or replace harness or connector.**

OK

If the same code is still output after the DTC is deleted, check the contact condition of each connection. If the connections are normal, the ECU may be defective.

DI54R-02

DTC	13, 14	Actuator Position Sensor Circuit

CIRCUIT DESCRIPTION

The circuit detects the rotation position of the actuator control plate and sends a signal to the ECU.

DTC No.	DTC Detecting Condition	Trouble Area
13	• Position sensor detects abnormal voltage.	• Cruise control actuator motor. • Cruise control actuator position sensor. • Harness or connector between actuator position sensor and body ground. • Harness or connector between actuator motor and ECU. • ECU
14	• Open in actuator motor circuit. • Position sensor signal value does not change when the motor operates.	

WIRING DIAGRAM

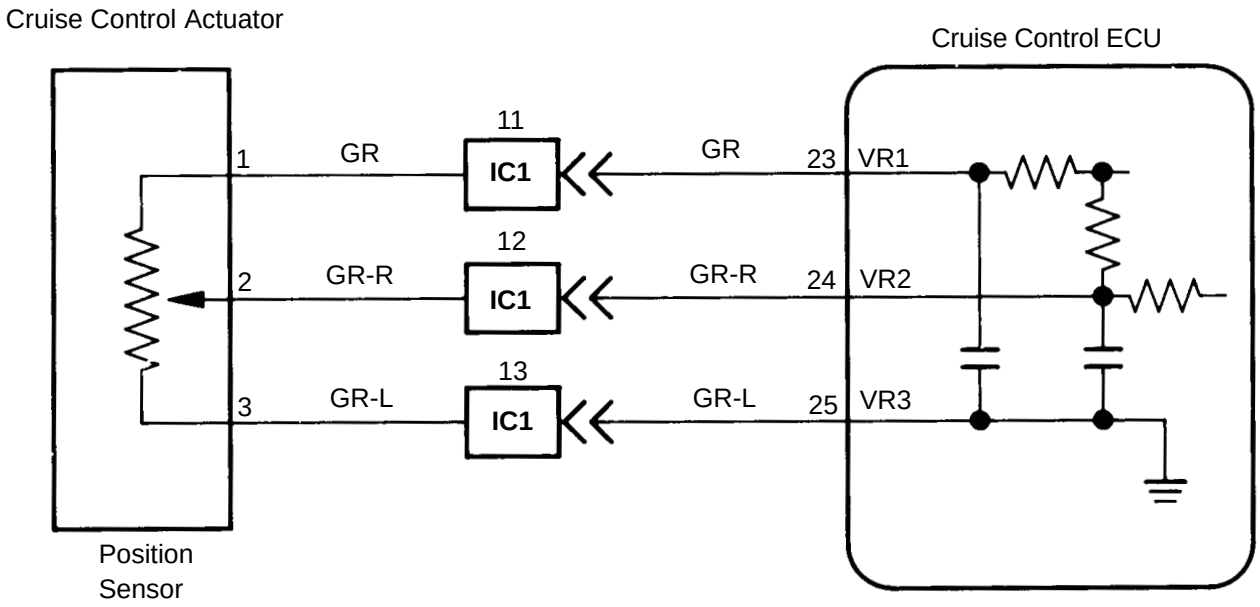

N07460

INSPECTION PROCEDURE

1	**Check voltage between terminals VR2 and VR3 of ECU connector.**

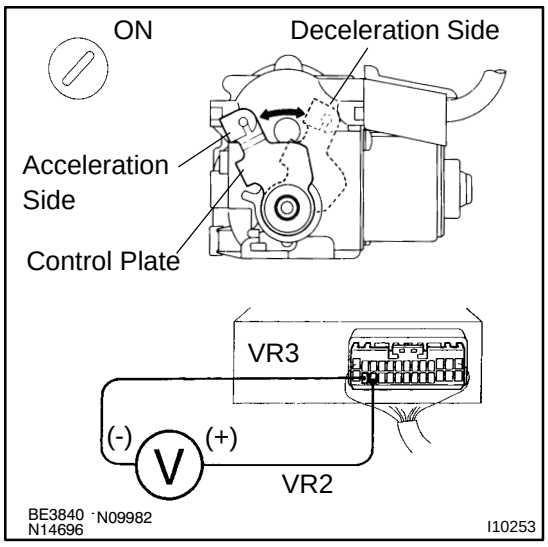

PREPARATION:

Remove the ECU with connectors still connected.

CHECK:

(a) Turn ignition switch OFF.

(b) Measure voltage between terminals VR2 and VR3 of ECU connector while turning control plate slowly by hand from the deceleration side to the acceleration side.

OK:

Voltage:
Fully closed: Approx. 1.3 V
Fully opened: Approx. 4.0 V
Note: As the control plate is turned, the voltage should increase gradually without interruption.

OK → **Proceed to next circuit inspection shown on matrix chart (See page DI-421).**

NG

2	Check actuator position sensor.

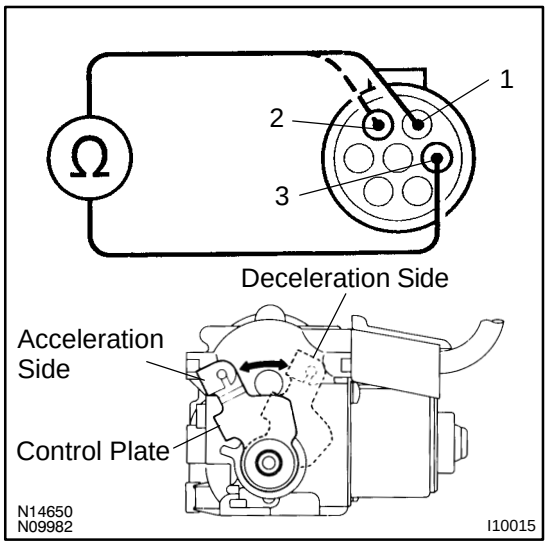

PREPARATION:

(a) Remove cruise control actuator.

(b) Disconnect the actuator connector.

CHECK:

Measure resistance between actuator terminal 1 and 3 of actuator connector.

OK:

Resistance: Approx. 2.2 kΩ

CHECK:

Measure resistance between terminals 2 and 3 of actuator connector, while turning the control plate slowly by hand from the deceleration side to the acceleration side.

OK:

Resistance:
Fully closed: Approx. 530Ω
Fully opened: Approx. 2.0 kΩ
Note:
As the control plate turns, the resistance should increase gradually without interruption.

NG → **Replace actuator assembly.**

OK

3	Check for open and short in harness and connector between ECU and actuator position sensor (See page IN-28).

NG → **Repair or replace harness or connector.**

OK

Check harness and connector for loose connection. If connection is normal check and replace ECU.

DI548-02

DTC	14	Open in D Squib Circuit

CIRCUIT DESCRIPTION

The D squib circuit consists of the center airbag sensor assembly, spiral cable and steering wheel pad. It causes the airbag to deploy when the airbag deployment conditions are satisfied.
For details of the function of each component, see FUNCTION OF COMPONENTS on page RS-2 .
DTC 14 is recorded when an open is detected in the squib circuit.

DTC No.	DTC Detecting Condition	Trouble Area
14	• Open circuit in D^+ wire harness or D^- wire harness of squib • D squib malfunction • Spiral cable malfunction • Center airbag sensor assembly malfunction	• Steering wheel pad (D squib) • Spiral cable • Center airbag sensor assembly • Wire harness

WIRING DIAGRAM

Refer to page DI-371 for the WIRING DIAGRAM.

INSPECTION PROCEDURE

1	**Preparation. (See step 1 on page DI-398)**

2	**Check D squib circuit.**

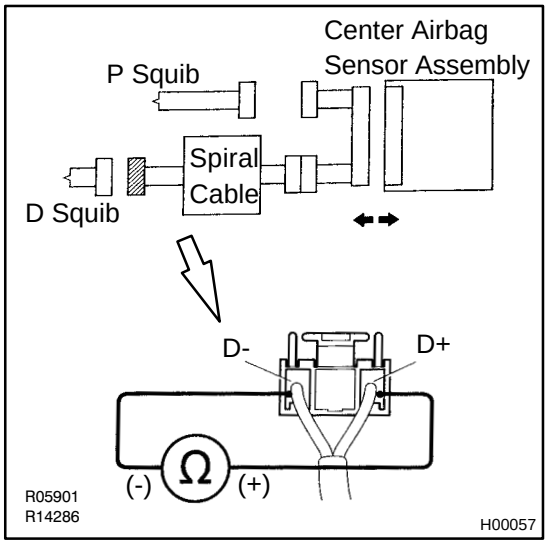

CHECK:
For the connector (on the spiral cable side) between the spiral cable and steering wheel pad, measure the resistance between D^+ and D^- .
OK:
Resistance: Below 1 Ω

NG	**Go to step 5.**

OK

3	Check center airbag sensor assembly.

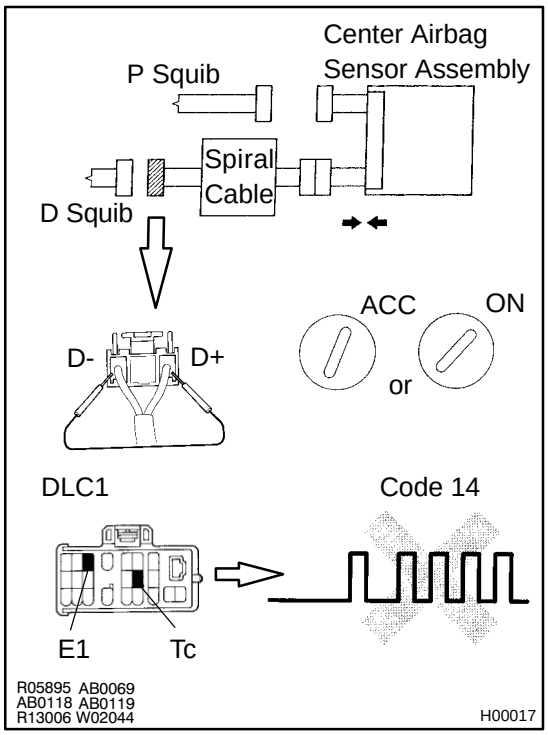

PREPARATION:

(a) Connect the connector to center airbag sensor assembly.
(b) Using a service wire, connect D^+ and D^- on spiral cable side of connector between spiral cable and steering wheel pad.
(c) Connect negative (-) terminal cable to battery, and wait at least 2 seconds.

CHECK:

(a) Turn the ignition switch to ACC or ON and wait at least 20 seconds.
(b) Clear malfunction code stored in memory.
(See page DI-346)
(c) Turn the ignition switch to LOCK, and wait at least 20 seconds.
(d) Turn the ignition switch to ACC or ON, and wait at least 20 seconds.
(e) Using SST, connect the terminals Tc and E1 of DLC 1.
SST 09843-18020
(f) Check DTC.

OK:

DTC 14 is not output.

HINT:
Codes other than code 14 may be output at this time, but they are not relevant to this check.

NG → **Replace center airbag sensor assembly.**

OK

4	Check D squib.

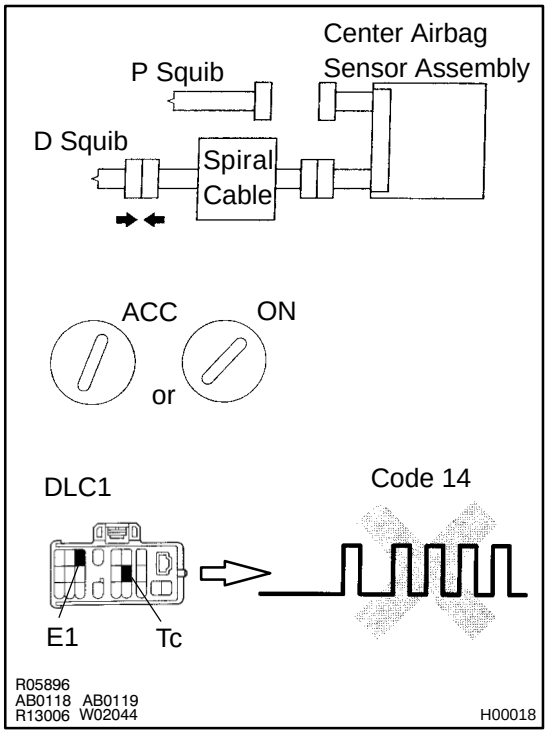

PREPARATION:

(a) Turn the ignition switch to LOCK.
(b) Disconnect negative (-) terminal cable from the battery, and wait at least 90 seconds.
(c) Connect the steering wheel pad connector.
(d) Connect negative (-) terminal cable to battery, and wait at least 2 seconds.

CHECK:

(a) Turn the ignition switch to ACC or ON, and wait at least 20 seconds.
(b) Clear malfunction code stored in memory.
(See page DI-346)
(c) Turn the ignition switch to LOCK, and wait at least 20 seconds.
(d) Turn the ignition switch to ACC or ON, and wait at least 20 seconds.
(e) Using SST, connect the terminals Tc and E1 of DLC 1.
SST 09843-18020
(f) Check DTC.

OK:

DTC 14 is not output.

HINT:
Codes other than code 14 may be output at this time, but they are not relevant to this check.

NG → **Replace steering wheel pad.**

OK

From the results of the above inspection, the malfunctioning part can now be considered normal. To make sure of this, use the simulation method to check.

5	Check spiral cable.

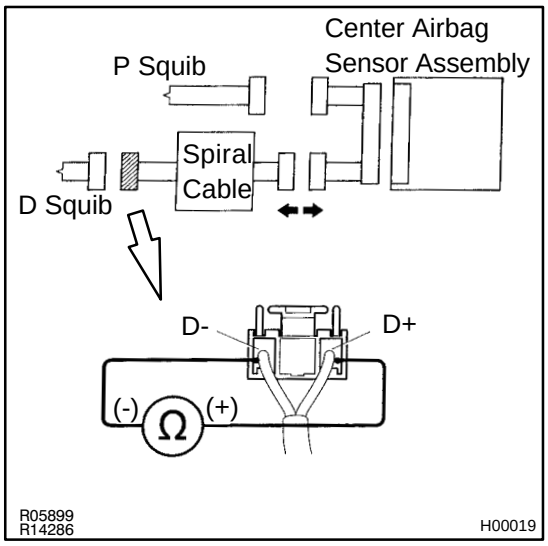

PREPARATION:

Disconnect the connector between center airbag sensor assembly and spiral cable.

CHECK:

For the connector (on the spiral cable side) between the spiral cable and steering wheel pad, measure the resistance between D^+ and D^-.

OK:

Resistance: Below 1 Ω

NG → **Repair or replace spiral cable.**

OK

6	**Check harness between center airbag sensor assembly and spiral cable.**

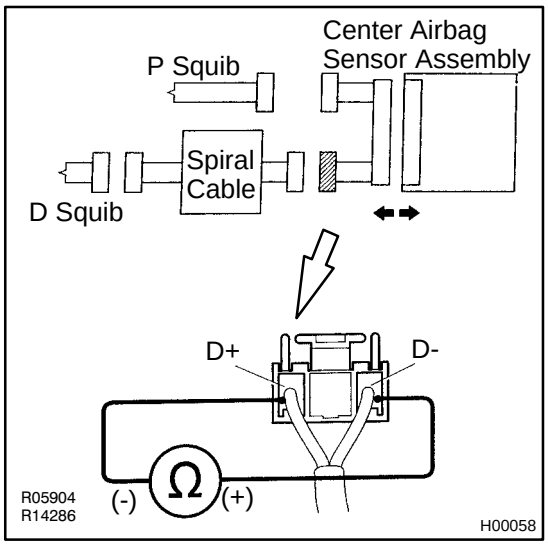

CHECK:

For the connector (on the center airbag sensor assembly side) between the center airbag sensor assembly and spiral cable, measure the resistance between D^+ and D^-.

OK:

Resistance: Below 1 Ω

NG → **Repair or replace harness or connector between center airbag sensor assembly and spiral cable.**

OK

From the results of the above inspection, the malfunctioning part can now be considered normal. To make sure of this, use the simulation method to check.

DI549-01

DTC	15	Open in Front Airbag Sensor Circuit

CIRCUIT DESCRIPTION

The front airbag sensor detects the deceleration force in a frontal collision and is located in the front fender on the left and right sides.

For details of the function of each component, see FUNCTION OF COMPONENTS on page RS-2 .

DTC 15 is recorded when an open is detected in the front airbag sensor circuit.

NOTICE:

The front airbag sensor connector is equipped with an electrical connection check mechanism for the purpose of detecting an open in the front airbag sensor (See page RS-2). This mechanism is constructed so that when the terminals of the front airbag sensor have been connected (when the connector housing lock is in the locked condition), the connection detection pin on the wire harness side connects with the terminals for diagnosis use on the sensor side. If the connector is not properly connected, the diagnostic system may detect only a malfunction code, even though the SRS is functioning normally. When connecting the front airbag sensor connector, make sure it is connected properly. If DTC 15 is displayed after the front airbag sensor connector has been connected, check again that it is properly connected.

DTC No.	DTC Detecting Condition	Trouble Area
15	• Open circuit in +S wire harness or -S wire harness of front airbag sensor • Front airbag sensor malfunction • Malfunction of electrical connection check mechanism of front airbag sensor • Center airbag sensor assembly malfunction	• Front airbag sensor • Center airbag sensor assembly • Wire harness

WIRING DIAGRAM

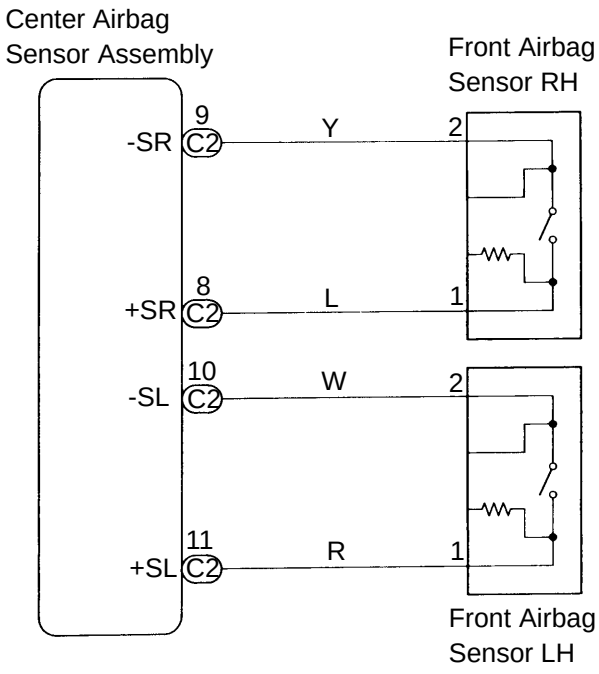

W00788

INSPECTION PROCEDURE

1	**Preparation. (See step 1 on page DI-398)**

2	**Check front airbag sensor circuit (Measure resistance between terminals +SR and -SR, +SL and -SL of center airbag sensor assembly connector). (See step 2 on page DI-398)**

NG → **Go to step 4.**

OK

3	Check center airbag sensor assembly.

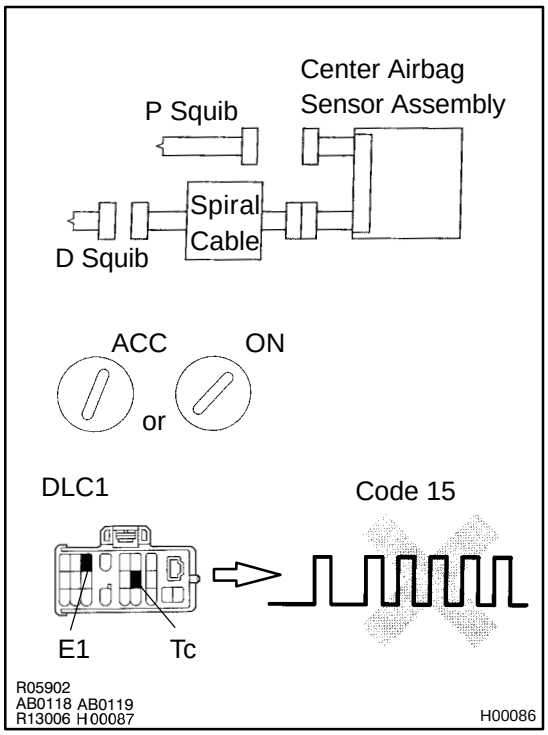

PREPARATION:

(a) Connect the connector to center airbag sensor assembly.
(b) Connect negative (-) terminal cable to battery, and wait at least 2 seconds.

CHECK:

(a) Turn the ignition switch to ACC or ON and wait at least 20 seconds.
(b) Clear malfunction code stored in memory.
(See page DI-346)
(c) Turn the ignition switch to LOCK, and wait at least 20 seconds.
(d) Turn the ignition switch to ACC or ON, and wait at least 20 seconds.
(e) Using SST, connect the terminals Tc and E1 of DLC 1.
SST 09843-18020
(f) Check DTC.

OK:

DTC 15 is not output.

HINT:

Codes other than code 15 may be output at this time, but this is not relevant to this check.

NG → **Replace center airbag sensor assembly.**

OK

From the results of the above inspection, the malfunctioning part can now be considered normal. To make sure of this, use the simulation method to check.

4	Check front airbag sensor. (See step 9 on page DI-355)

NG → **Replace front airbag sensor.**

OK

5	**Check harness between center airbag sensor assembly and front airbag sensor.**

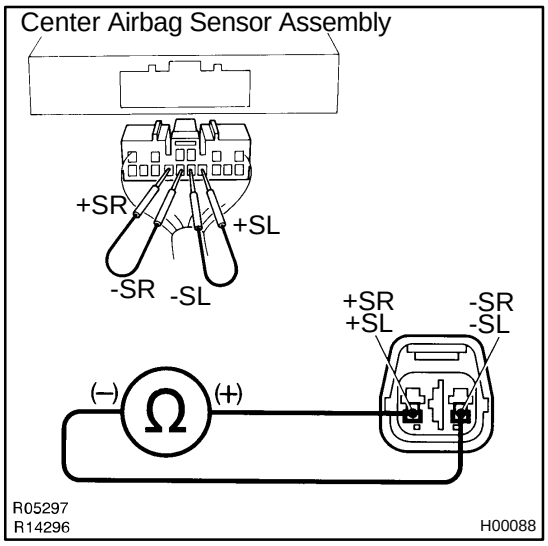

PREPARATION:

Using service wires, connect +SR and -SR, +SL and -SL on the wire harness side of the center airbag sensor assembly connector.

CHECK:

Measure the resistance between terminals +SR and -SR, +SL and -SL of harness side connector of front airbag sensor.

OK:

Resistance: Below 1 Ω

NOTICE:

- **Lightly touch ohmmeter probes at position shown in illustration.**
- **Make sure the front airbag sensor connector is properly connected.**

NG → **Repair or replace harness and connector between center airbag sensor assembly and front airbag sensor.**

OK

From the results of the above inspection, the malfunctioning part can now be considered normal. To make sure of this, use the simulation method to check.

DI53O-02

DTC	21, 22, 23, 24	ABS Actuator Solenoid Circuit

CIRCUIT DESCRIPTION

This solenoid goes on when signals are received from the ECU and controls the fluid pressure acting on the brake cylinders, thus controlling the braking force.

DTC No.	DTC Detecting Condition	Trouble Area
21	Conditions (1) through (3) continue for 0.05 sec. or more: (1) ABS solenoid relay terminal (SR) voltage: Below 1.5 V (2) Voltage of ABS ECU terminal AST: Battery positive voltage (3) When power transistor of ECU is ON, voltage of terminal SFRR or SFRH is 0 V or battery positive voltage.	• ABS solenoid relay • Open or short in SFRR or SFRH circuit
22	Conditions (1) through (3) continue for 0.05 sec. or more: (1) ABS solenoid relay terminal (SR) voltage: Below 1.5 V (2) Voltage of ABS ECU terminal AST: Battery positive voltage (3) When power transistor of ECU is ON, voltage of terminal SFLR or SFLH is 0 V or battery positive voltage.	• ABS solenoid relay • Open or short in SFLR or SFLH circuit
23	Conditions (1) through (3) continue for 0.05 sec. or more: (1) ABS solenoid relay terminal (SR) voltage: Below 1.5 V (2) Voltage of ABS ECU terminal AST: Battery positive voltage (3) When power transistor of ECU is ON, voltage of terminal SRRR or SRRH is 0 V or battery positive voltage.	• ABS solenoid relay • Open or short in SRRR or SRRH circuit
24	Conditions (1) through (3) continue for 0.05 sec. or more: (1) ABS solenoid relay terminal (SR) voltage: Below 1.5 V (2) Voltage of ABS ECU terminal AST: Battery positive voltage (3) When power transistor of ECU is ON, voltage of terminal SRLR or SRLH is 0 V or battery positive voltage.	• ABS solenoid relay • Open or short in SRLR or SRLH circuit

Fail safe function:

If trouble occurs in the actuator solenoid circuit, the ECU cuts off current to the ABS solenoid relay and prohibits ABS control.

WIRING DIAGRAM

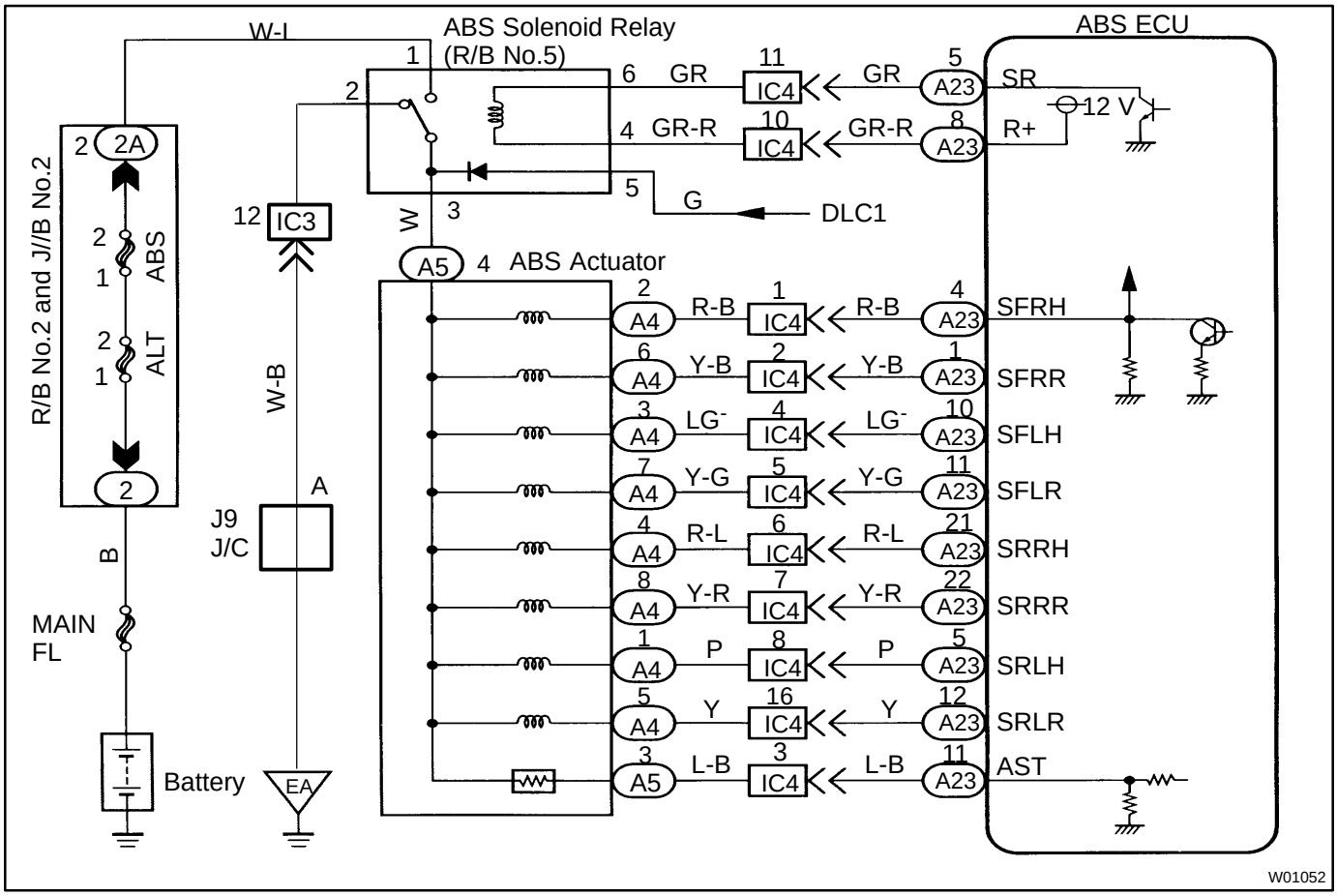

INSPECTION PROCEDURE

1	**Check ABS actuator solenoid.**

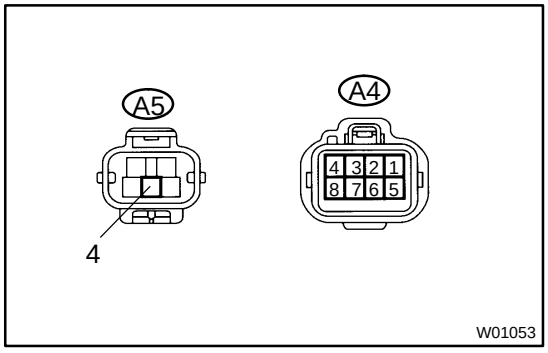

CHECK:

Check continuity between terminal A5 - 4 and A4 - 1, 2, 3, 4, 5, 6, 7, 8 of ABS actuator connector.

OK:

Continuity

HINT:

Resistance of each of the solenoids SFRH, SFLH, SRRH, SRLH is 5.0 Ω

Resistance of each of the solenoids SFRR, SFLR, SRRR, SRLR is 2.2 Ω

NG	**Replace ABS actuator.**

OK

2	**Check for open and short in harness and connector between ABS ECU and actuator (See page IN-28).**

NG → **Repair or replace harness or connector.**

OK

If the same code is still output after the DTC is deleted, check the contact condition of each connection. If the connections are normal, the ECU may be defective.

DI54S-02

DTC	21, 23	Vehicle Speed Sensor Circuit

CIRCUIT DESCRIPTION

The vehicle speed sensor signal is sent to the cruise control ECU as the vehicle speed signal.
The rotor shaft is driven by the gear of the transaxle.
For each rotation of the shaft, the speed sensor sends a 4-pulse signal to the combination meter.
This signal is converted inside the combination meter and sent as a 4-pulse signal to the cruise control ECU.
The ECU calculates the vehicle speed from this pulse frequency.

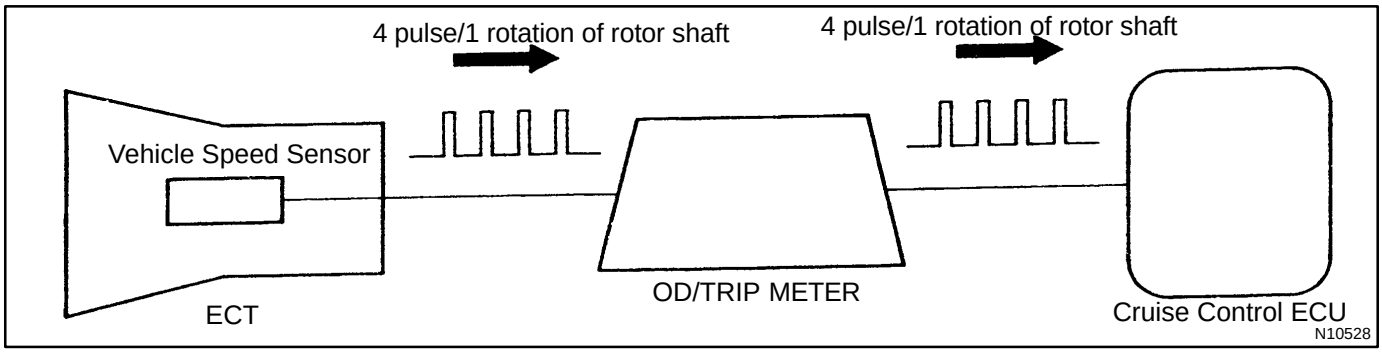

DTC No.	DTC Detecting Condition	Trouble Area
21	• Speed signal is not input to the ECU while cruise control is set.	• Speed sensor • Combination meter • Harness or connector between speed sensor and combination meter, combination meter and ECU. • ECU
23	• Vehicle speed sensor pulse is abnormal.	• Actuator • Speed sensor • Harness or connector in OD and SPD circuit (Open or short intermittently) • ECU

WIRING DIAGRAM

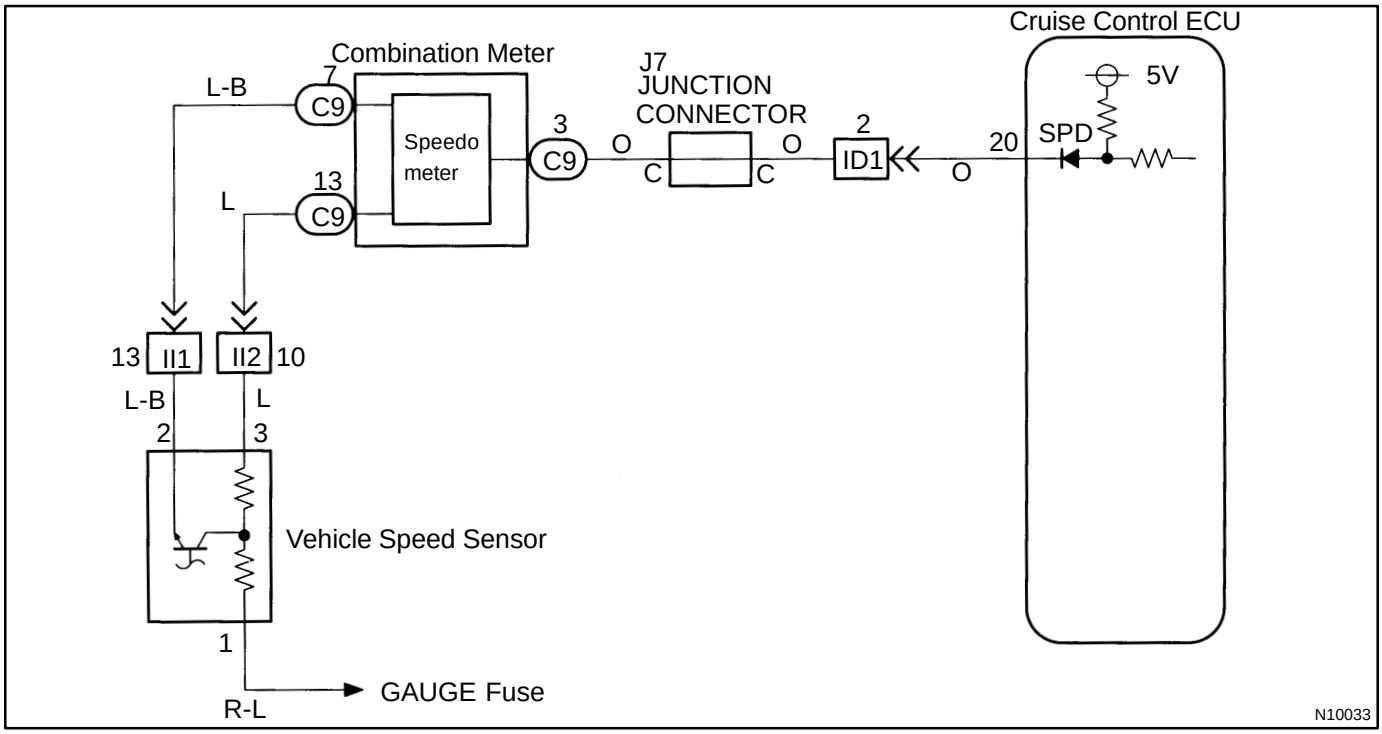

INSPECTION PROCEDURE

1	**Input signal check.**

Vehicle speed	Indicator Light Blinking Pattern
Above 40 km/h (25 mph)	ON / OFF — Blinks — 0.25 sec. / 0.25 sec.
Below 40 km/h (25 mph)	ON — Stay ON / OFF

CHECK:

(a) See input signal check on page DI-413 .

(b) Check indicator light operation when driving with vehicle speed above 40 km/h (25 mph), and with vehicle speed below 40 km/h (25 mph).

OK:

Vehicle speed above 40 km/h (25 mph):
Indicator light blinks
Vehicle speed below 40 km/h (25 mph):
Indicator light stays on

OK → **Proceed to next circuit inspection shown on matrix chart (See page DI-421).**

NG

2	**Check speedometer circuit (See Combination meter troubleshooting on page BE-2).**

NG → **Repair or replace vehicle speed sensor, harness, connector or combination meter assembly.**

OK

Check harness and connector for loose connection. If connection is normal, check and replace ECU.

DI54A-01

DTC	24	Half Connection in Center Airbag Sensor Assembly Connector

CIRCUIT DESCRIPTION

The center airbag sensor assembly detects partial connection of connectors.
For details of the function of each component, see FUNCTION OF COMPONENTS on page RS-2 .
When the center airbag sensor assembly detects an open in the electrical connection check mechanism of the center airbag sensor connector or in the center airbag sensor circuit, trouble code 24 is recorded.

DTC No.	DTC Detecting Condition	Trouble Area
24	• Malfunction of electrical connection check mechanism of center airbag sensor assembly connector • Center airbag sensor assembly malfunction	• Electrical connection check mechanism • Center airbag sensor assembly

INSPECTION PROCEDURE

1	**Are connector of center airbag sensor assembly properly connected?**

NG → **Connect connectors.**

OK ↓

2	**Preparation. (See step 1 on page DI-398)**

3	**Check disconnection detection pin in the center airbag sensor assembly connector.**

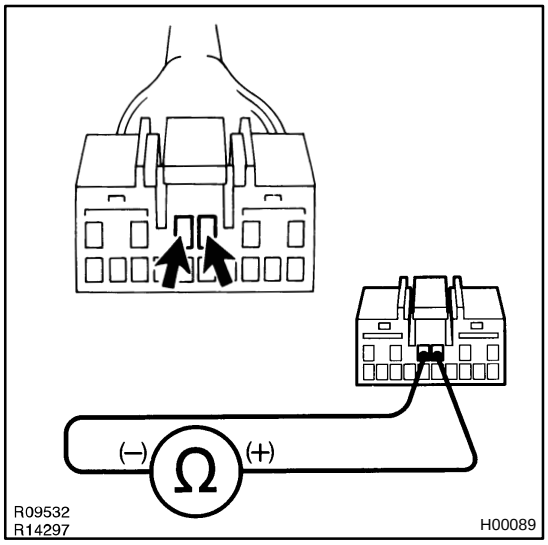

CHECK:

Detection pin.

(1) Perform a visual check.

(2) Test for continuity.

OK:

Continuity exists.

NG → **Repair or replace center airbag sensor assembly connector.**

OK

4	Check center airbag sensor assembly.

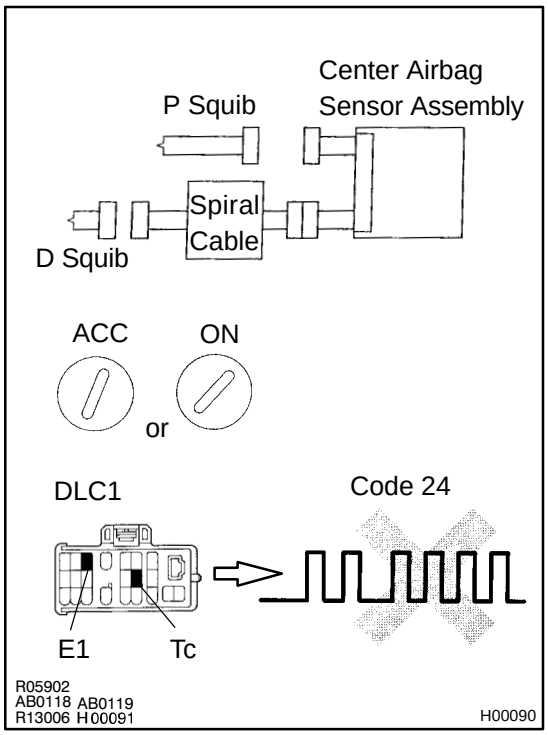

PREPARATION:

(a) Connect the connector to the center airbag sensor assembly.

(b) Connect negative (-) terminal cable to battery, and wait at least 2 seconds.

CHECK:

(a) Turn the ignition switch to ACC or ON and wait at least 20 seconds.

(b) Clear malfunction code stored in memory.
(See page DI-346)

(c) Turn the ignition switch to LOCK, and wait at least 20 seconds.

(d) Turn the ignition switch to ACC or ON, and wait at least 20 seconds.

(e) Using SST, connect the terminals Tc and E1 of DLC 1.
SST 09843-18020

(f) Check DTC.

OK:

DTC 24 is not output.

HINT:

Codes other than code 24 may be output at this time, but they are not relevant to this check.

NG → **Replace center airbag sensor assembly.**

OK

From the results of the above inspection, the malfunctioning part can now be considered normal. To make sure of this, use the simulation method to check.

DI54B-01

DTC	31	Center Airbag Sensor Assembly Malfunction

CIRCUIT DESCRIPTION

The center airbag sensor assembly consists of the center airbag sensor, safing sensors, ignition control and drive circuit, diagnosis circuit, etc.
It receivers signals from the airbag sensors, judges whether or not the airbag must be deployed, and diagnostic system malfunction.
DTC 31 is recorded when a malfunction in the center airbag sensor assembly is detected.

DTC No.	DTC Detecting Condition	Trouble Area
31	• Center airbag sensor assembly malfunction	• Center airbag sensor assembly

INSPECTION PROCEDURE

HINT:
When a malfunction code other than code 31 is displayed at the same time, first repair the malfunction indicated by the malfunction code other than code 31.

1	**Preparation (See step 1 on page DI-398)**

2	**Check voltage at IG2 and ACC of center airbag sensor assembly.**

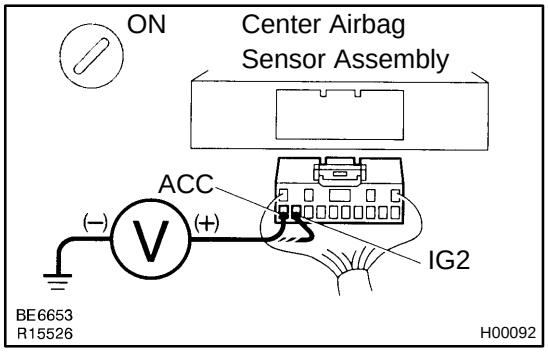

PREPARATION:
(a) Connect negative (-) terminal cable to battery.
(b) Turn the ignition switch ON.

CHECK:
Measure the voltage between terminals IG2 and ACC of center airbag sensor assembly and body ground.

OK:
Voltage: Below 16 V

NG	**Check battery and charging system.** **(7A-FE: See page CH-2)** **(5S-FE: See page CH-2)**

OK

3	Is DTC 31 output again?

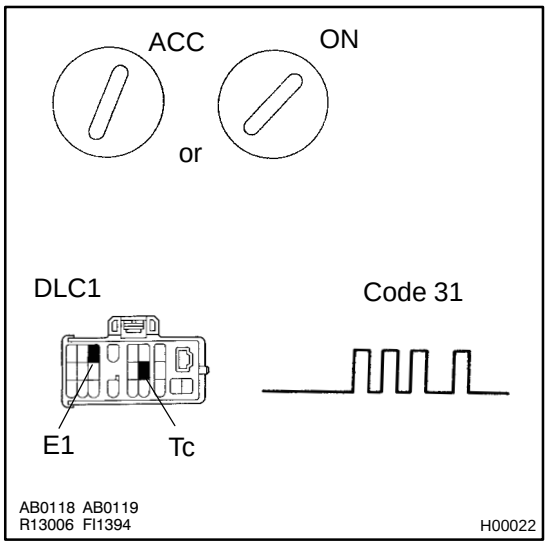

PREPARATION:

Clear malfunction.

CHECK:

(a) Turn the ignition switch to LOCK, and wait at least 20 seconds.

(b) Turn the ignition switch to ACC or ON, and wait at least 20 seconds.

(c) Repeat operation in step (a) and (b) at least 5 times.

(d) Using SST, connect the terminals Tc and E1 of DLC 1.
SST 09843-18020

(e) Check DTC.

NO → **Using simulation method, reproduce malfunction symptoms (See page IN-18).**

YES

Replace center airbag sensor assembly.

DI54T-01

DTC	32	Control Switch Circuit (Cruise Control Switch)

CIRCUIT DESCRIPTION

This circuit carries the SET/COAST, RESUME/ACCEL and CANCEL signals (each voltage) to the ECU.

DTC No.	DTC Detecting Condition	Trouble Area
32	• Short in, control switch circuit. • Voltage abnormality in control switch.	• Cruise control switch • Harness or connector between control switch and ECU • ECU

WIRING DIAGRAM

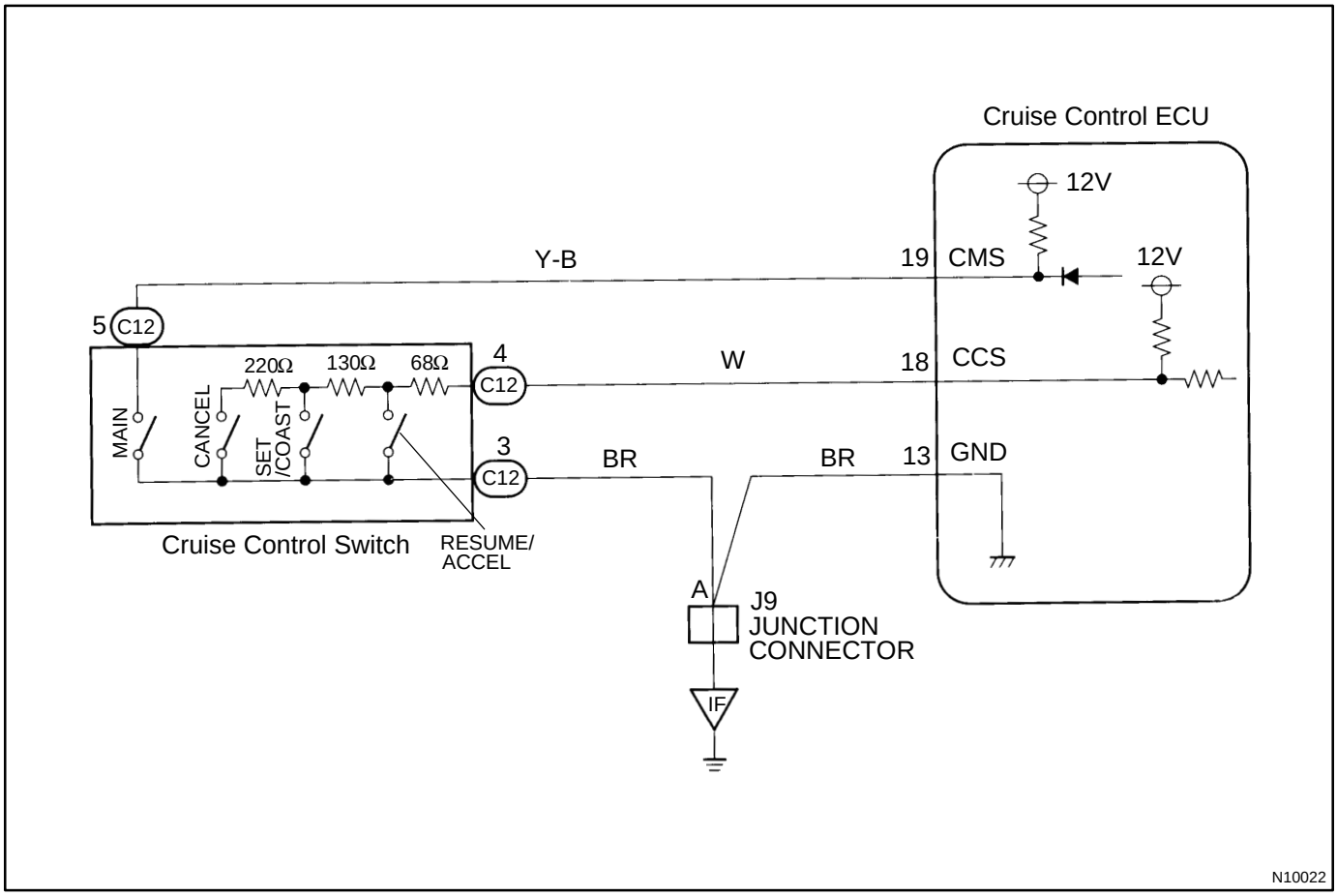

INSPECTION PROCEDURE

1	Input signal check.

Input Signal	Indicator Light Blinking Pattern
SET/COAST switch	2 Pulses: ON / OFF
RESUME/ACCEL switch	3 Pulses: ON / OFF
CANCEL switch	SW OFF: ON / OFF; SW ON

PREPARATION:

(a) See input signal check on page DI-413 .

(b) Check the indicator light operation when each of the SET/COAST, RESUME/ACCEL and CANCEL is turned ON.

OK:

SET/COAST, RESUME/ACCEL switch

The signals shown in the table on the left should be output when each switch is ON. The signal should disappear when the switch is turned OFF.

CANCEL switch

The indicator light goes off when the cancel switch is turned ON.

OK → **Proceed to next circuit inspection shown on matrix chart (See page DI-421).**

NG

2	Check voltage between terminals CCS of ECU connector and body ground.

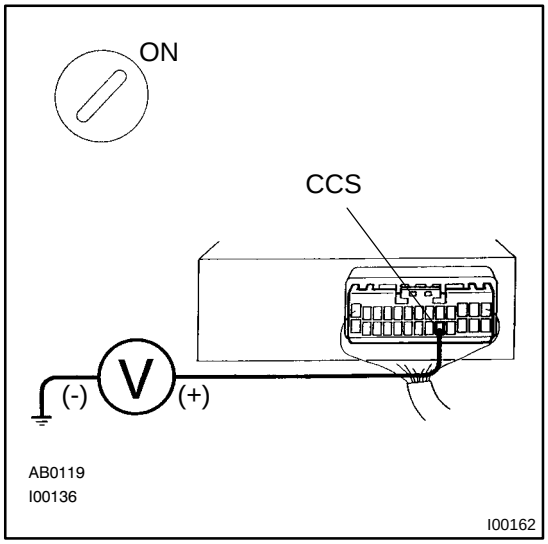

PREPARATION:

Remove ECU with connectors still connected.

CHECK:

(a) Turn ignition switch ON.

(b) Measure voltage between terminals CCS of ECU connector and body ground, when each of the SET/COAST, RESUME/ACCEL and CANCEL is turned ON.

Switch position	Resistance (Ω)
Neutral	10 - 16 V
RES/ACC	0.8 - 1.4 V
SET/COAST	2.4 - 4.0 V
CANCEL	5.1 - 8.3 V

NG → **Proceed to next circuit inspection shown on matrix chart (See page DI-421).**

OK

3	Check control switch.

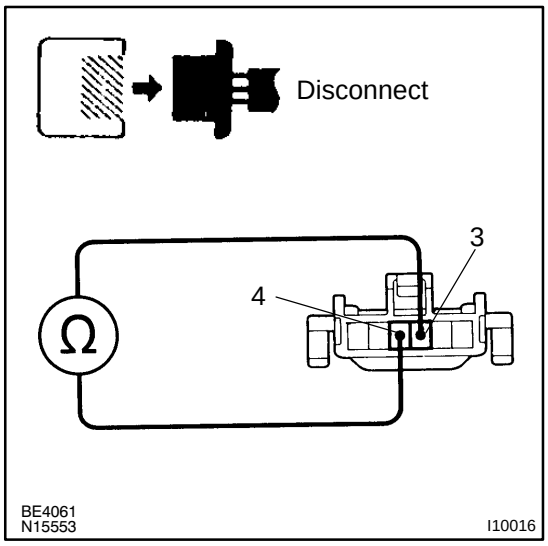

PREPARATION:

(a) Remove steering wheel center pad. (See page SR-21)

(b) Disconnect control switch.

CHECK:

Measure resistance between terminals 3 and 4 of control switch connector when control switch is operated.

Switch position	Resistance
Neutral	1 MΩ or higher
RES/ACC	50 - 80 Ω
SET/COAST	180 - 220 Ω
CANCEL	400 - 440 Ω

HINT:

When DTC 34 is displayed, carefully check that resistance is always ∞ in neutral position, particularly when switching between RES/ACC and SET/COAST.

NG → **Replace cruise control switch.**

OK

4	Check for open and short in harness and connector between ECU and control switch (See page IN-28).

NG → **Repair or replace harness or connector.**

OK

Check and replace ECU.

DI54C-02

DTC	53	Short in P Squib Circuit

CIRCUIT DESCRIPTION

The P squib circuit consists of the center airbag sensor assembly and front passenger airbag assembly. It causes the airbag to deploy when the airbag deployment conditions are satisfied.
For details of the function of each component, see FUNCTION OF COMPONENTS on page RS-2 .
DTC 53 is recorded when a short is detected in the P squib circuit.

DTC No.	DTC Detecting Condition	Trouble Area
53	• Short circuit between P^+ wire harness P^- wire harness of squib • P squib malfunction • Center airbag sensor assembly malfunction	• Front passenger airbag assembly (P squib) • Center airbag sensor assembly • Wire harness

WIRING DIAGRAM

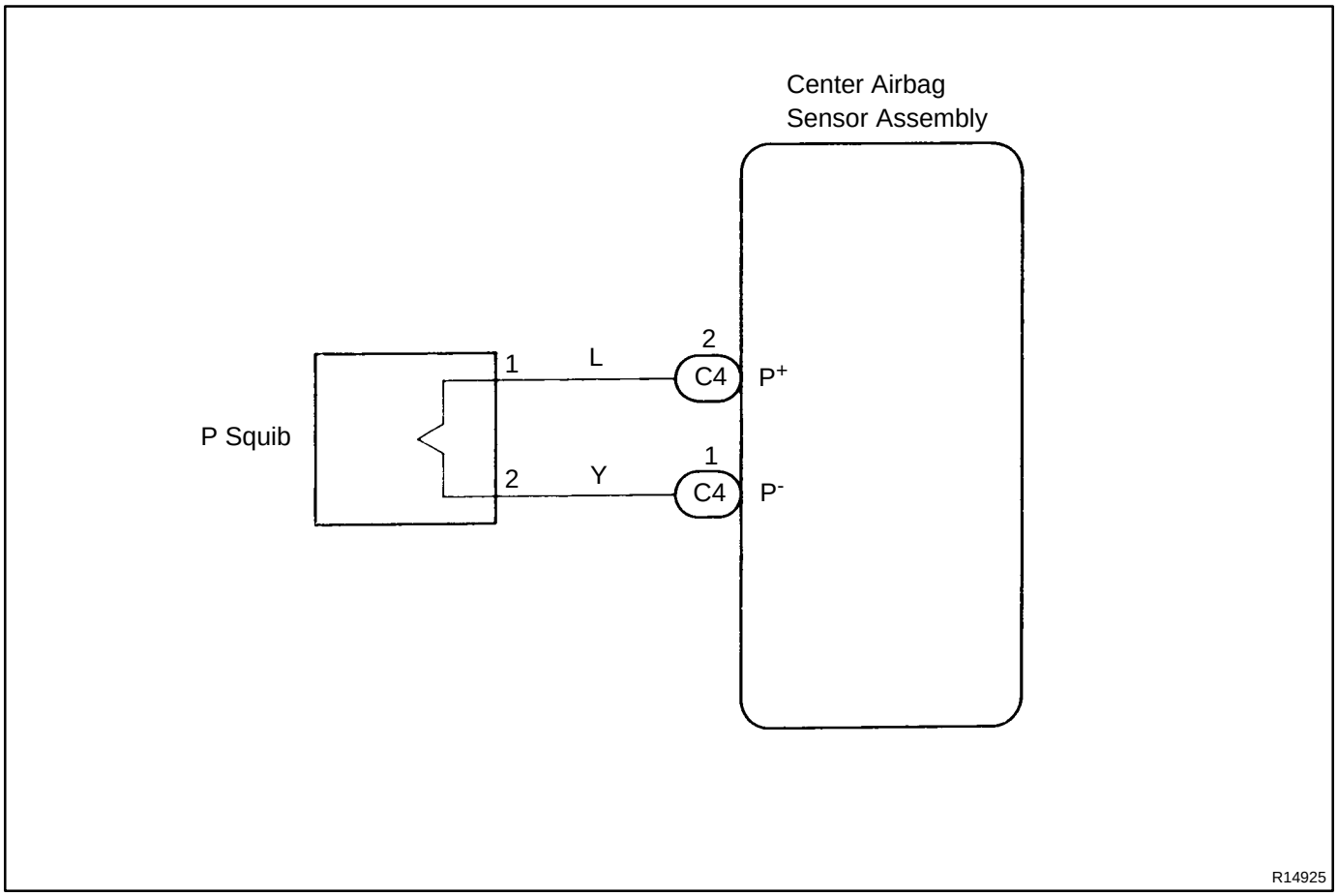

INSPECTION PROCEDURE

1	**Preparation. (See step 1 on page DI-398)**

2	**Check P squib circuit.**

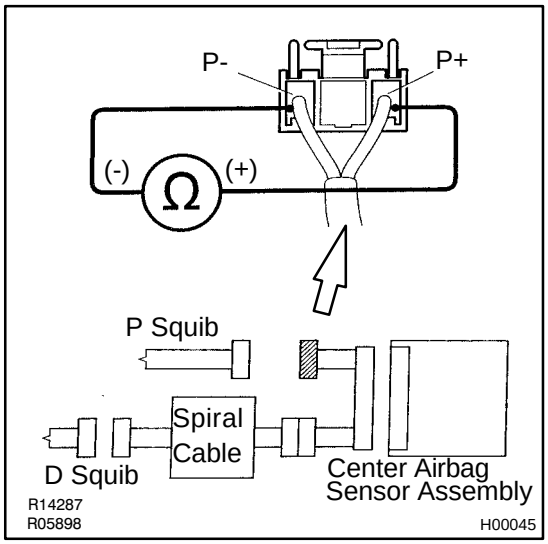

PREPARATION:

Release airbag activation prevention mechanism on center airbag sensor assembly connector.
(See page DI-346)

CHECK:

For the connector (on the center airbag sensor assembly side) between the center airbag sensor assembly and front passenger airbag assembly, measure the resistance between P^+ and P^-.

OK:

Resistance: 1 MΩ or Higher

NG → **Repair or replace harness or connector between center airbag sensor assembly and front passenger airbag assembly.**

OK

3	**Check center airbag sensor assembly.**

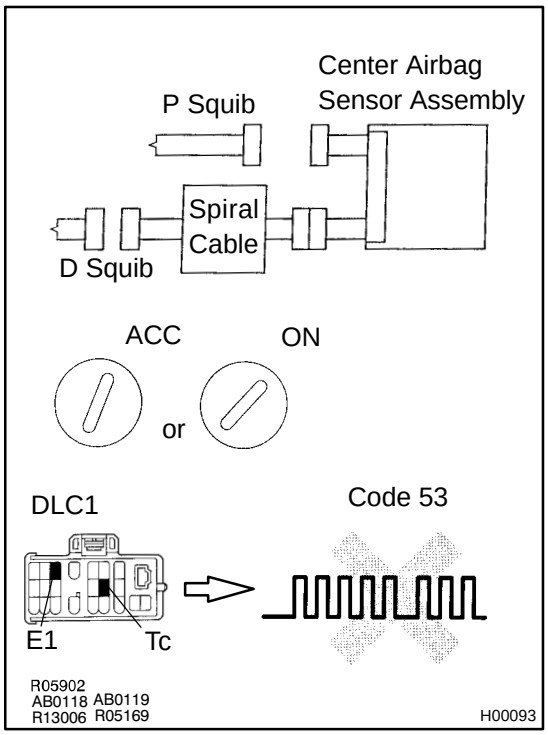

PREPARATION:

(a) Connect the connector to center airbag sensor assembly.
(b) Connect negative (-) terminal cable to battery, and wait at least 2 seconds.

CHECK:

(a) Turn the ignition switch to ACC or ON and wait at least 20 seconds.
(b) Clear malfunction code stored in memory.
(See page DI-346)
(c) Turn the ignition switch to LOCK, and wait at least 20 seconds.
(d) Turn the ignition switch to ACC or ON, and wait at least 20 seconds.
(e) Using SST, connect the terminals Tc and E1 of DLC1.
SST 09843-18020
(f) Check DTC.

OK:

DTC 53 is not output.

HINT:

Codes other than code 53 may be output at this time, but they are not relevant to this check.

NG → **Replace center airbag sensor assembly.**

OK

4	Check P squib.

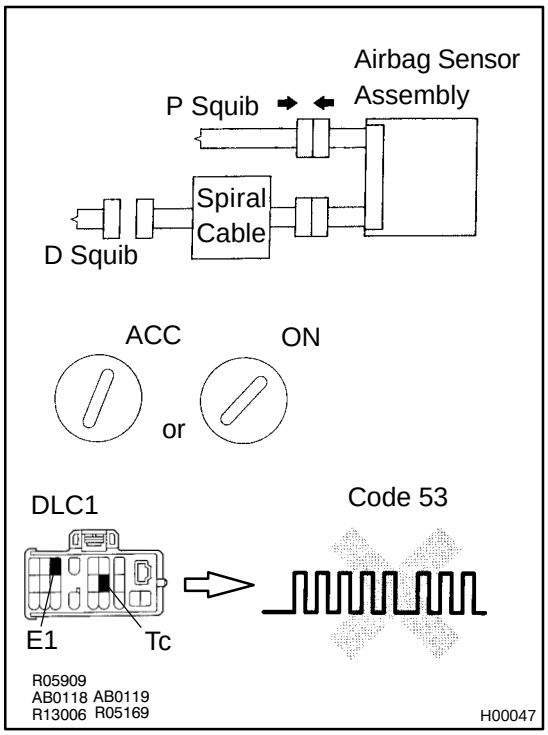

PREPARATION:

(a) Turn the ignition switch to LOCK.
(b) Disconnect negative (-) terminal cable from the battery, and wait at least 90 seconds.
(c) Connect the front passenger airbag assembly connector.
(d) Connect negative (-) terminal cable to battery, and wait at least 2 seconds.

CHECK:

(a) Turn the ignition switch to LOOK, and wait at least 20 seconds.
(b) Turn the ignition switch to ACC or ON and wait at least 20 seconds.
(c) Clear malfunction code.
(See page DI-346)
(d) Turn the ignition switch to LOCK, and wait at least 20 seconds.
(e) Turn the ignition switch to ACC or ON, and wait at least 20 seconds.
(f) Using SST, connect the terminals Tc and E1 of DLC1.
SST 09843-18020
(g) Check DTC.

OK:

DTC 53 is not output.

HINT:
Codes other than code 53 may be output at this time, but they are not relevant to this check.

NG → **Replace front passenger airbag assembly.**

OK

From the results of the above inspection, the malfunctioning part can now be considered normal. To make sure of this, use the simulation method to check.

DI54D-01

DTC	54	Open in P Squib Circuit

CIRCUIT DESCRIPTION

The P squib circuit consists of the center airbag sensor assembly and front passenger airbag assembly. It causes the airbag to deploy when the airbag deployment conditions are satisfied.
For details of the function of each component, see FUNCTION OF COMPONENTS on page RS-2 .
DTC 54 is recorded when an open is detected in the P squib circuit.

DTC No.	DTC Detecting Condition	Trouble Area
54	• Open circuit in P^+ wire harness or P^- wire harness of squib • Squib malfunction • Center airbag sensor assembly malfunction	• Front passenger airbag assembly (P squib) • Center airbag sensor assembly • Wire harness

WIRING DIAGRAM

Refer to page DI-391 for the WIRING DIAGRAM.

INSPECTION PROCEDURE

1	**Preparation. (See step 1 on page DI-398)**

2	**Check P squib circuit.**

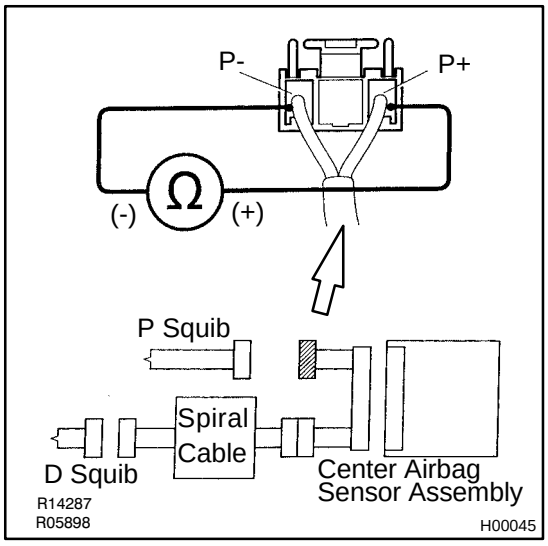

CHECK:

For the connector (on the center airbag sensor assembly side) between the center airbag sensor assembly and front passenger airbag assembly, measure the resistance between P^+ and P^- .

OK:

Resistance: Below 1 Ω

NG	**Repair or replace harness or connector between center airbag sensor assembly and front passenger airbag assembly.**

OK

3	Check center airbag sensor assembly.

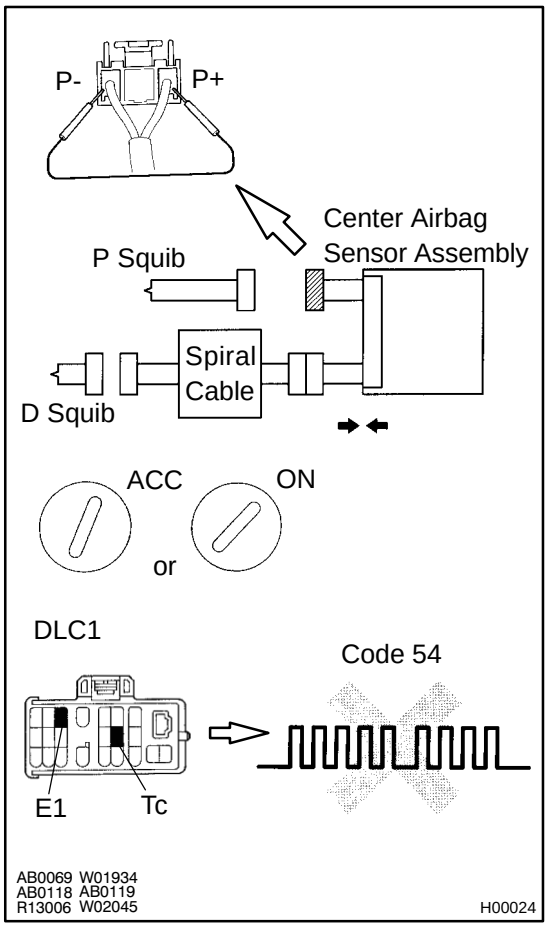

PREPARATION:

(a) Connect the connector to center airbag sensor assembly.

(b) Using a service wire, connect P^+ and P^- on center airbag sensor assembly side of connector between center airbag sensor assembly and front passenger airbag assembly.

(c) Connect negative (-) terminal cable to battery, and wait at least 2 seconds.

CHECK:

(a) Turn the ignition switch to ACC or ON and wait at least 20 seconds.

(b) Clear malfunction code stored in memory.
(See page DI-346)

(c) Turn the ignition switch to LOCK, and wait at least 20 seconds.

(d) Turn the ignition switch to ACC or ON, and wait at least 20 seconds.

(e) Using SST, connect the terminals Tc and E1 of DLC1.
SST 09843-18020

(f) Check DTC.

OK:

DTC 54 is not output.

HINT:

Codes other than code 54 may be output at this time, but they are not relevant to this check.

NG → **Replace center airbag sensor assembly.**

OK

4	Check P squib.

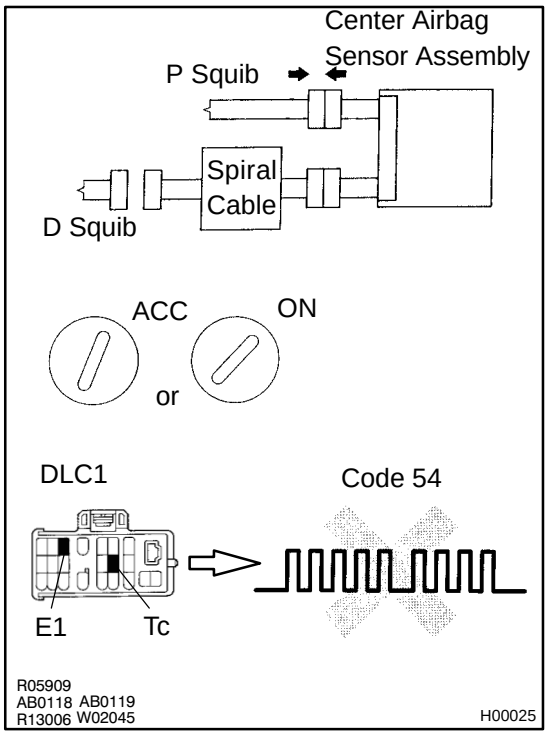

PREPARATION:

(a) Turn the ignition switch to LOCK.
(b) Disconnect negative (-) terminal cable from the battery, and wait at least 90 seconds.
(c) Connect the front passenger airbag assembly connector.
(d) Connect negative (-) terminal cable to battery, and wait at least 2 seconds.

CHECK:

(a) Turn the ignition switch to ACC or ON and wait at least 20 seconds.
(b) Clear malfunction code stored in memory.
(See page DI-346)
(c) Turn the ignition switch to LOCK, and wait at least 20 seconds.
(d) Turn the ignition switch to ACC or ON, and wait at least 20 seconds.
(e) Using SST, connect the terminal Tc and E1 of DLC1.
SST 09843-18020
(f) Check DTC.

OK:

DTC 54 is not output.

HINT:
Codes other than code 54 may be output at this time, but they are not relevant to this check.

NG → **Replace front passenger airbag assembly.**

OK

From the results of the above inspection, the malfunctioning part can now be considered normal. To make sure of this, use the simulation method to check.

DI53U-02

ABS Warning Light Circuit

CIRCUIT DESCRIPTION

If the ECU detects trouble, it lights the ABS warning light while at the same time prohibiting ABS control. At this time, the ECU records a DTC in memory.
After removing the short pin of the DLC1 connect terminals Tc and E_1 of DLC1 to make the ABS warning light blink and output the DTC.

WIRING DIAGRAM

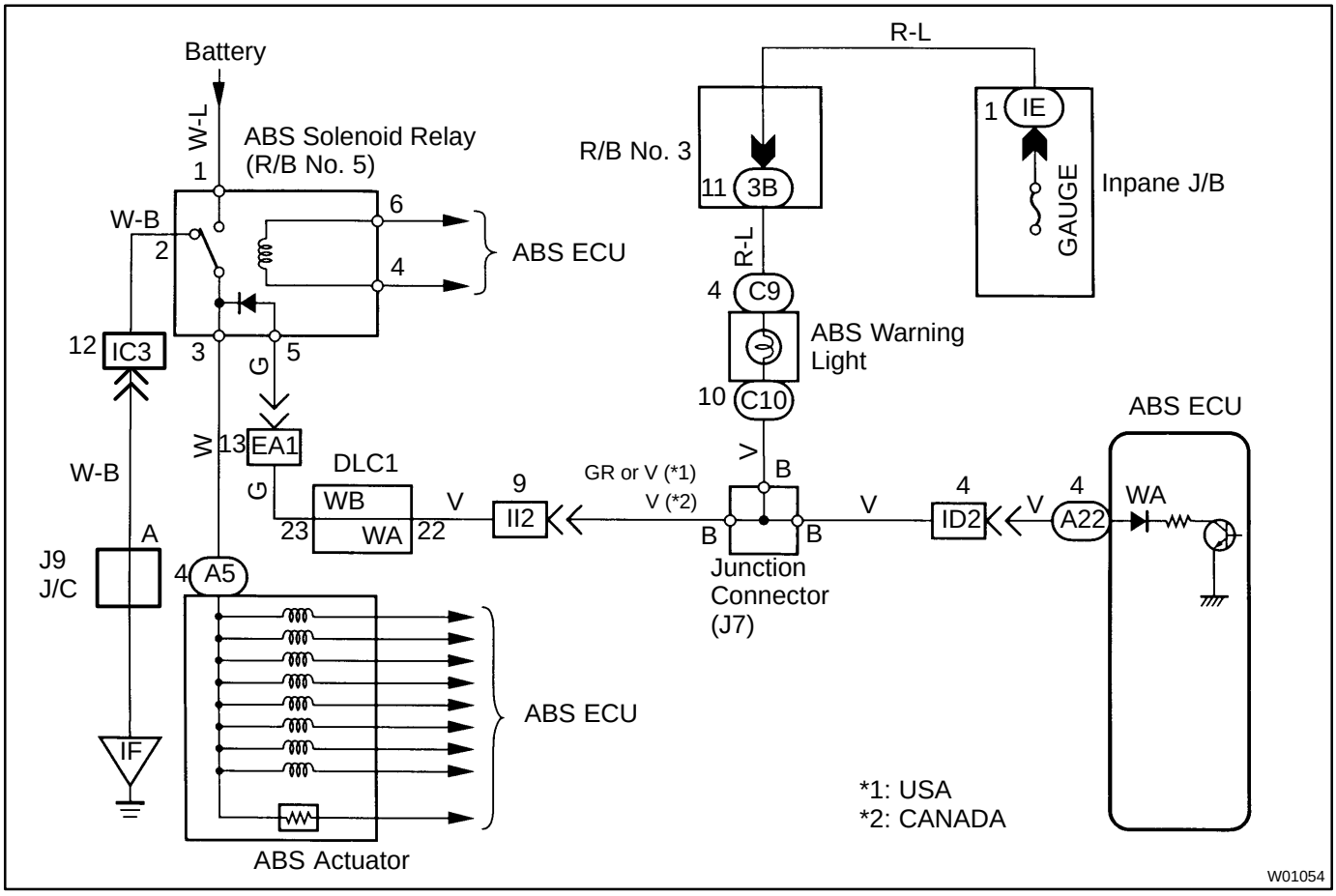

INSPECTION PROCEDURE

Troubleshooting in accordance with the chart below for each trouble symptom.

ABS warning light does not light up	Go to step 1
ABS warning light remains on	Go to step 3

1	**Check ABS warning light.**

See Combination Meter Troubleshooting on page BE-2 .

NG → **Repair bulb or combination meter assembly.**

OK

2	Check ABS solenoid relay.

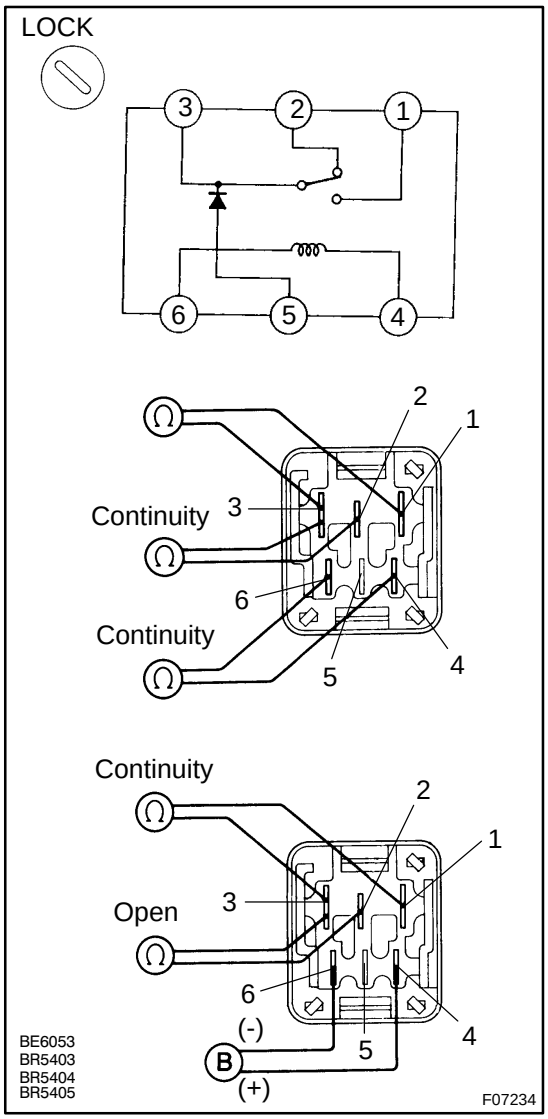

PREPARATION:

Remove solenoid relay from R/B No.5.

CHECK:

Check continuity between each terminal of ABS solenoid relay.

OK:

Terminals 4 and 6	Continuity (Reference value 80 Ω)
Terminals 2 and 3	Continuity
Terminals 1 and 3	Open

CHECK:

(a) Apply battery voltage between terminals 4 and 6.

(b) Check continuity between each terminal of ABS solenoid relay.

OK:

Terminals 2 and 3	Open
Terminals 1 and 3	Continuity

NG → **Replace ABS solenoid relay.**

OK

Check for open in harness and connector between DLC1 and ABS solenoid relay and body ground (See page IN-28).

3	**Is DTC output?**

Perform DTC check on page DI-308 .

YES → **Repair circuit indicated by the code output.**

NO

4	**Does ABS warning light go off if short pin is removed?**

NO → **Check for short in harness and connector between warning light, and DLC1 and ABS ECU (See page IN-28).**

YES

5	**Check ABS solenoid relay (See step 2).**

NG → **Replace ABS solenoid relay.**

OK

Check for short in harness and connector between DLC1 and ABS solenoid relay (See page IN-28).

DI52I-01

A/C Cut Control Circuit

CIRCUIT DESCRIPTION

This circuit cuts air conditioning operation during vehicle acceleration in order to increase acceleration performance. During acceleration with the vehicle speed at 25 km/h (16 mph) or less, engine speed at 1,200 rpm or less and throttle valve opening angle at 60° or more, the A/C magnet switch is turned OFF for several seconds.

WIRING DIAGRAM

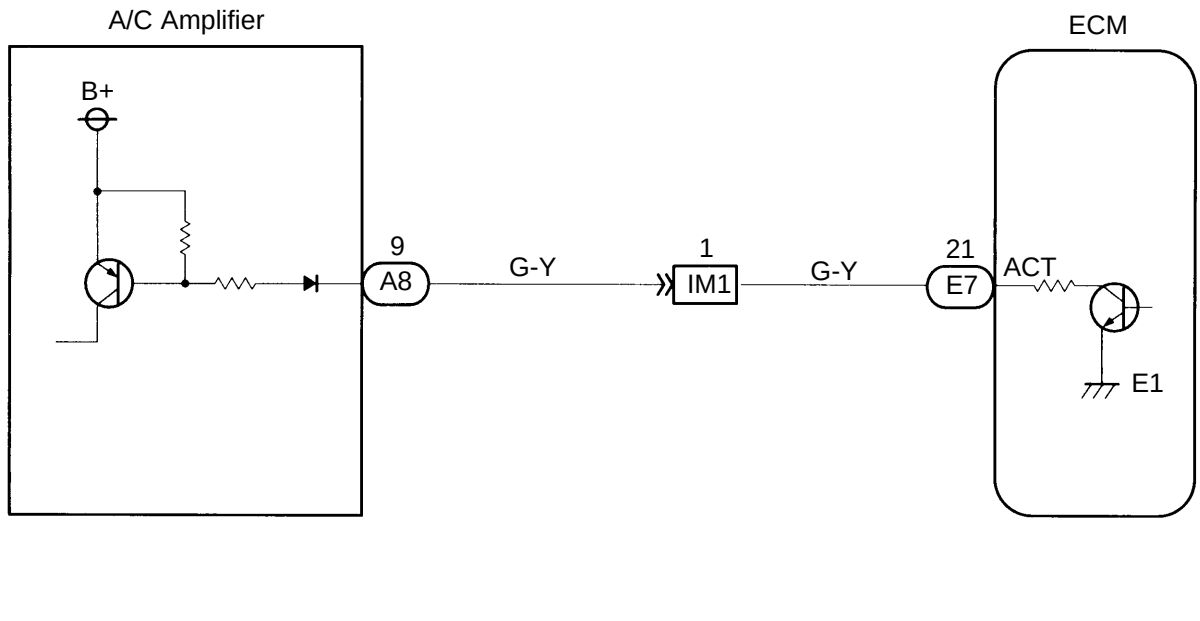

INSPECTION PROCEDURE

TOYOTA hand-held tester

1	**Connect the TOYOTA hand-held tester and check operation of air conditioning cut control.**

PREPARATION:

(a) Connect the TOYOTA hand-held tester to the DLC3.
(b) Turn ignition switch ON and TOYOTA hand-held tester main switch ON.
(c) Start the engine and air conditioning switch ON.

HINT:

A/C magnet clutch is turned ON.

(d) Select the ACTIVE TEST mode on the TOYOTA hand-held tester.

CHECK:

Check operation of A/C magnet clutch cut when air conditioning cut control is operated by the TOYOTA hand-held tester.

OK:

A/C magnet clutch is turned OFF.

OK → **Proceed to next circuit inspection shown on matrix chart (See page DI-127).**

NG

2	**Check for open and short in harness and connector between ECM and A/C amplifier (See page IN-28).**

NG → **Repair or replace harness or connector.**

NG

3	**Check voltage between terminal ACT of ECM and body ground.**

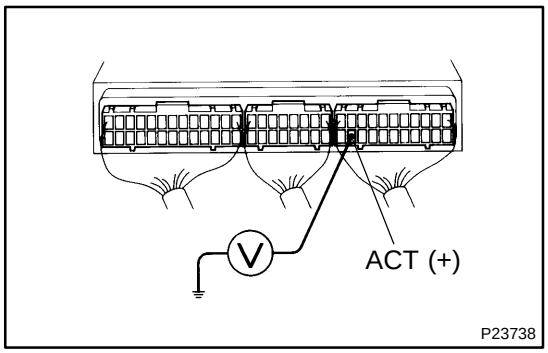

PREPARATION:

(a) Turn up the floor mat on the passenger side.

(b) Start the engine.

CHECK:

Measure voltage between terminal ACT of ECM connector and body ground when A/C switch is turned to ON and OFF.

OK:

A/C switch condition	Voltage
ON	9 ~ 14 V
OFF	Below 2.0 V

NG → **Check and replace A/C amplifier.**

OK

Check and replace ECM (See page IN-28).

OBD II scan tool (excluding TOYOTA hand-held tester)

1	**Check voltage between terminal ACT of ECM and body ground (See step 3 above)**

OK → **Check and replace ECM (See page IN-28).**

NG

2	**Check for open and short in harness and connector between ECM and A/C amplifier (See page IN-28).**

NG → **Repair or replace harness or connector.**

OK

Check and replace A/C amplifier.

DI51H-01

A/C Cut Control Circuit

CIRCUIT DESCRIPTION

This circuit cuts air conditioning operation during vehicle acceleration in order to increase acceleration performance. During acceleration with the vehicle speed at 25 km/h (16 mph) or less, engine speed at 1,200 rpm or less and throttle valve opening angle at 50° or more, the A/C magnet switch is turned OFF for several seconds.

WIRING DIAGRAM

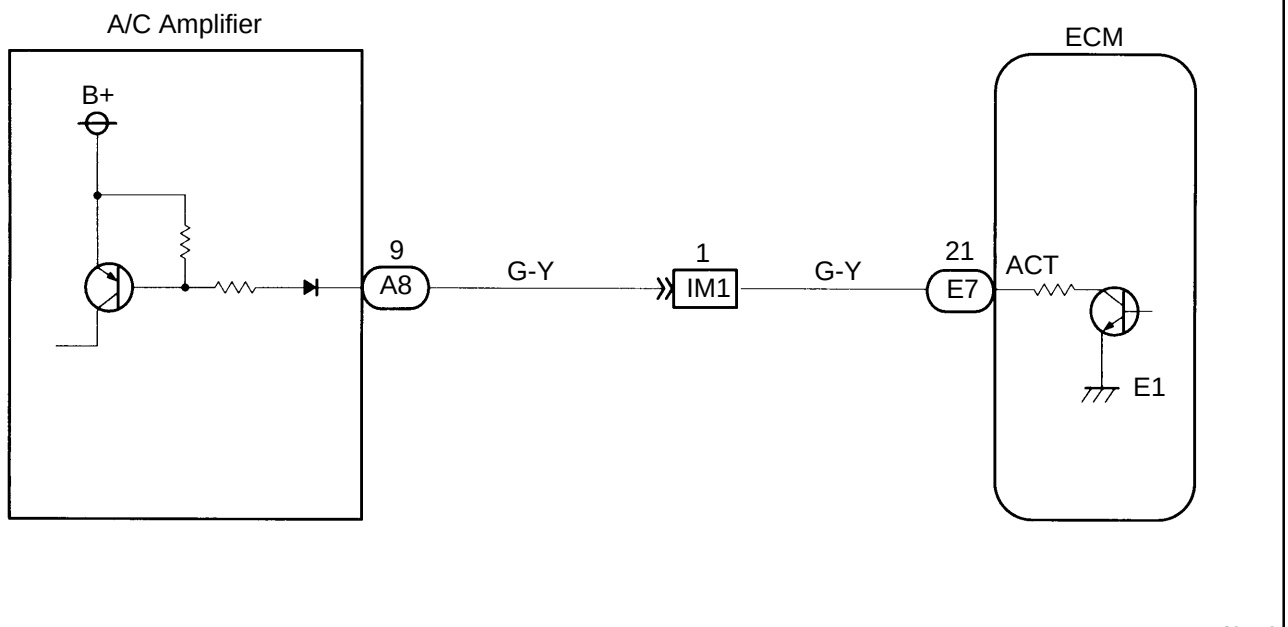

INSPECTION PROCEDURE
TOYOTA hand-held tester

1	**Connect the TOYOTA hand-held tester and check operation of air conditioning cut control.**

PREPARATION:

(a) Connect the TOYOTA hand-held tester to the DLC3.

(b) Turn ignition switch ON and push TOYOTA hand-held tester main switch ON.

(c) Start the engine and air conditioning switch ON.

HINT:

A/C magnet clutch is turned ON.

(d) Select the ACTIVE TEST mode on the TOYOTA hand-held tester.

CHECK:

Check operation of A/C magnet clutch cut when air conditioning cut control is operated by the TOYOTA hand-held tester.

OK:

A/C magnet clutch is turned OFF.

OK → **Proceed to next circuit inspection shown on matrix chart (See page DI-20)**

NG

2	**Check for open and short in harness and connector between ECM and A/C amplifier (See page IN-28).**

NG → **Repair or replace harness and connector.**

OK

3	**Check voltage between terminal ACT of ECM and body ground.**

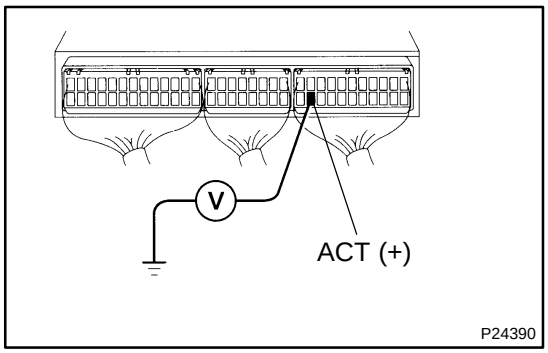

PREPARATION:

(a) Turn up the floor mat on the passenger side.

(b) Start the engine.

CHECK:

Measure voltage between terminal ACT of ECM connector and body ground when A/C switch is turned to ON and OFF.

OK:

A/C switch condition	Voltage
ON	7.5 - 14 V
OFF	Below 1.5 V

NG → **Check and replace A/C amplifier (See page AC-85)**

OK →

Check and replace ECM (See page IN-28).

OBDII scan tool (excluding TOYOTA hand-held tester)

1	**Check voltage between terminal ACT of ECM and body ground (See step 3 above).**

OK → **Check and replace ECM (See page IN-28).**

NG →

2	**Check for open and short in harness and connector between ECM and A/C amplifier (See page IN-28)**

NG → **Repair or replace harness or connector.**

OK →

Check and replace A/C amplifier (See page AC-85).

DI553-01

Actuator Control Cable Inspection

CHECK:

(a) Check that the actuator, control cable and throttle link are properly installed and that the cable and link are connected correctly.

(b) Check that the actuator and bell crank are operating smoothly.

(c) Check that the cable is not loose or too tight.

HINT:

- If the control cable is very loose, the vehicle's loss of speed going uphill will be large.
- If the control cable is too tight, the idle RPM will become high.

DI550-02

Back-up Power Source Circuit

CIRCUIT DESCRIPTION

The ECU back-up power source provides power even when the ignition switch is off and is used for diagnostic code memory, etc.

WIRING DIAGRAM

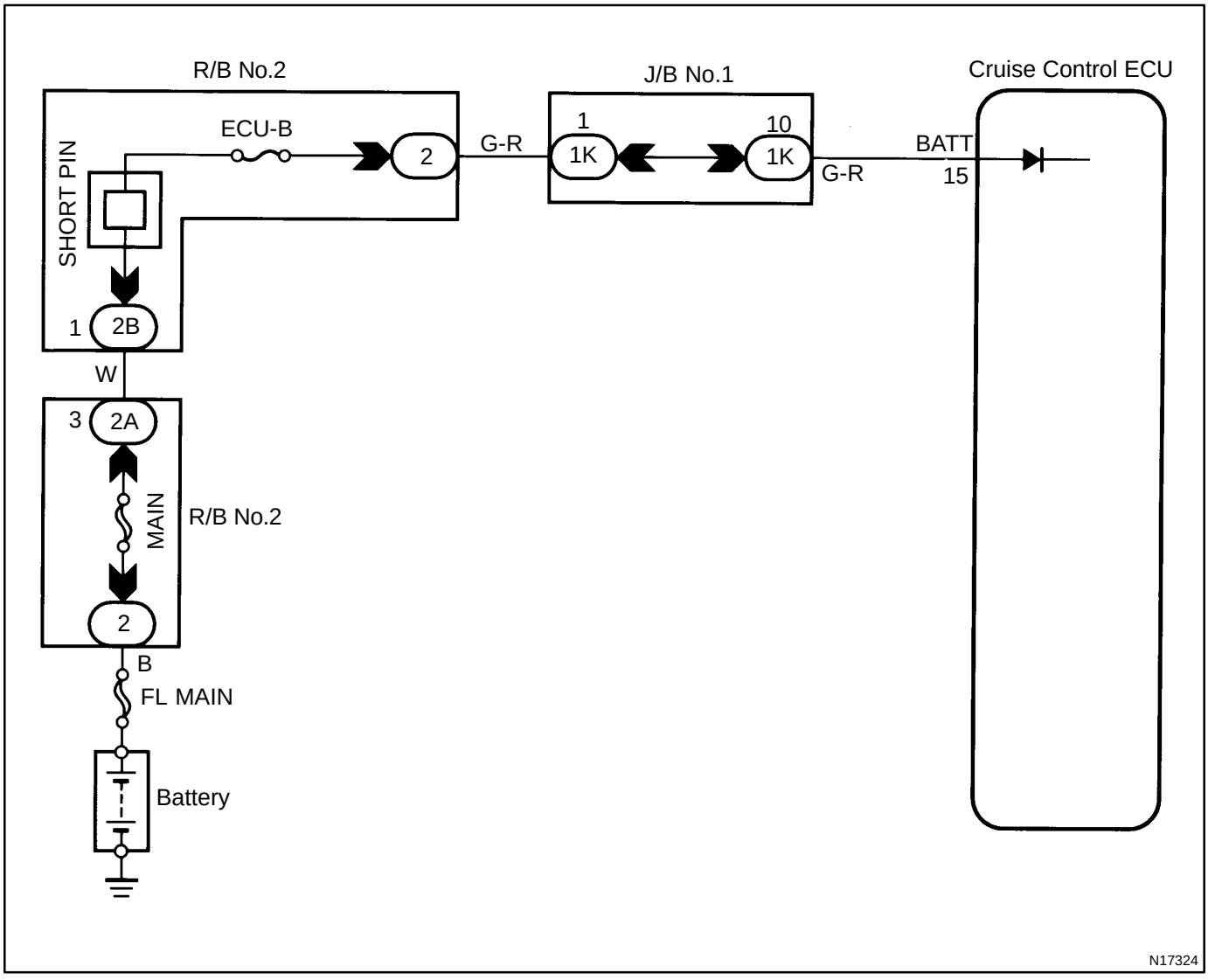

INSPECTION PROCEDURE

1	**Check ECU-IG fuse.**

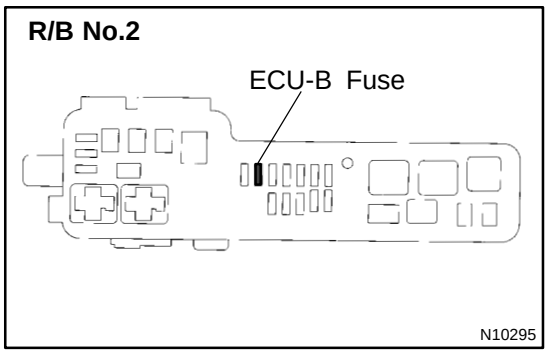

PREPARATION:
Remove ECU-B fuse from relay block No.2.
CHECK:
Check continuity of ECU-B fuse.
OK:
Continuity

NG → **Check for short in all the harness and components connected to the ECU-B fuse (See attached wiring diagram).**

OK

2	**Check voltage between terminal BATT of ECU connector and body ground.**

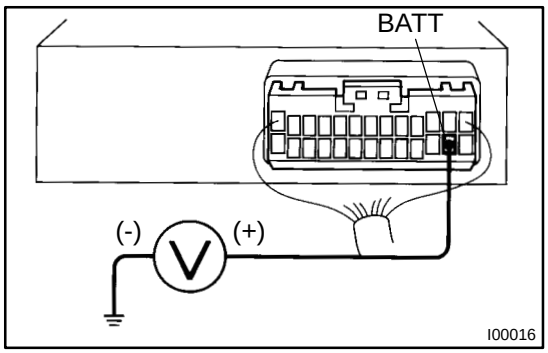

PREPARATION:
Remove ECU with connectors still connected.
CHECK:
Measure voltage between terminal BATT of ECU connector and body ground.
OK:
Voltage: 10 - 16 V

OK → **Proceed to next circuit inspection shown on matrix chart (See page DI-421).**

NG

Check and repair harness and connector between battery and ECU.

DI54Y-01

Clutch Switch Circuit

CIRCUIT DESCRIPTION

When the clutch pedal is depressed, the clutch switch sends a signal to the cruise control ECU, when this signal is input to the cruise control ECU during cruise control driving, the cruise control ECU cancels cruise control.

WIRING DIAGRAM

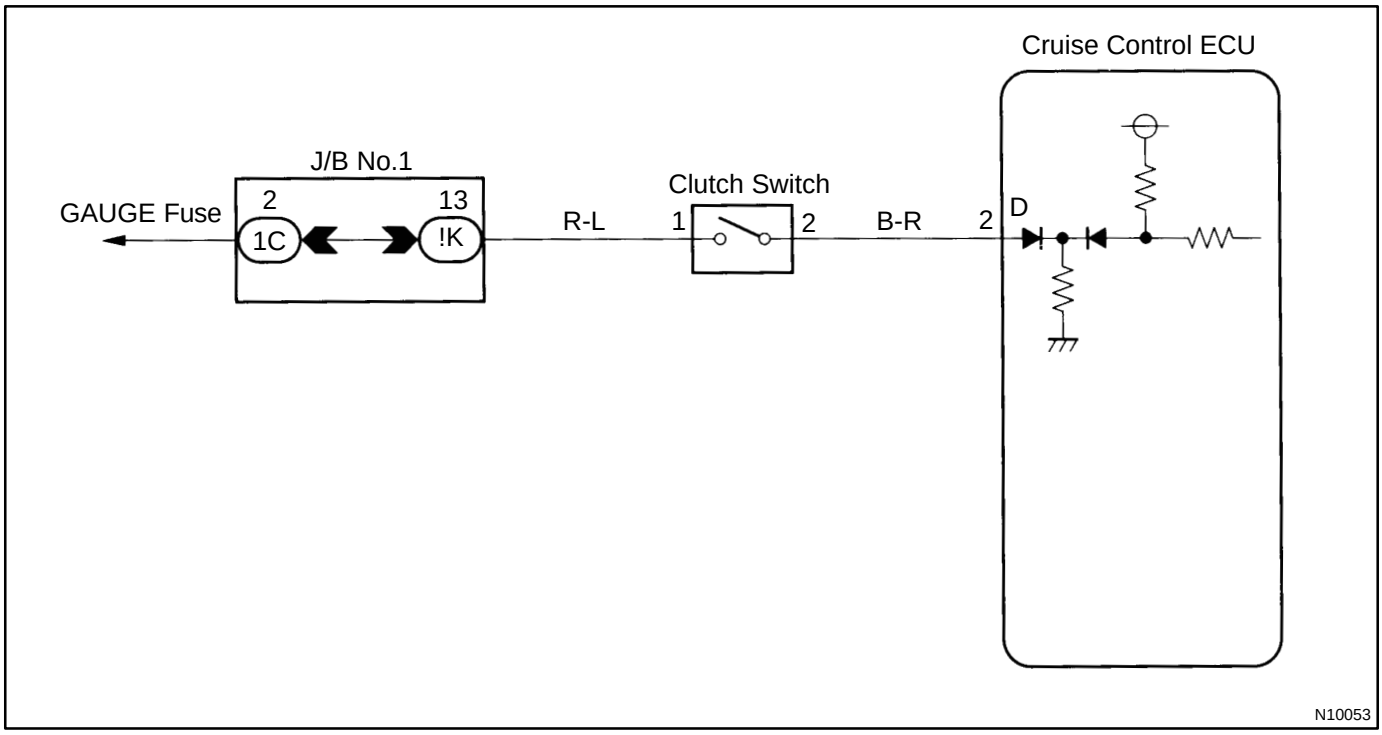

INSPECTION PROCEDURE

1	**Check operation of starter.**

CHECK:

Check that the starter operates normally and that the engine starts.

NG → **Proceed to engine troubleshooting**

OK

2	Input signal check.

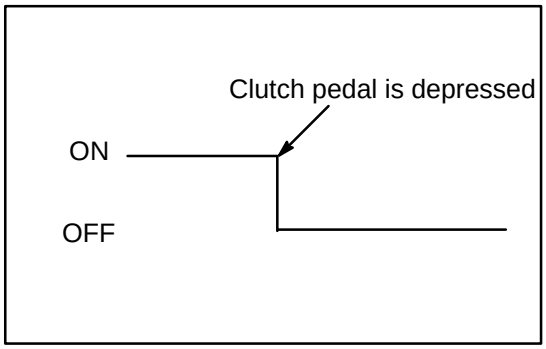

CHECK:

(a) See input signal check on page DI-413 .

(b) Check the indicator light when clutch pedal depressed.

OK:

The indicator light goes off when the clutch pedal depressed.

OK → **Proceed to next circuit inspection shown on matrix chart (See page DI-421).**

NG

3	Check voltage between terminal D of ECU and body ground.

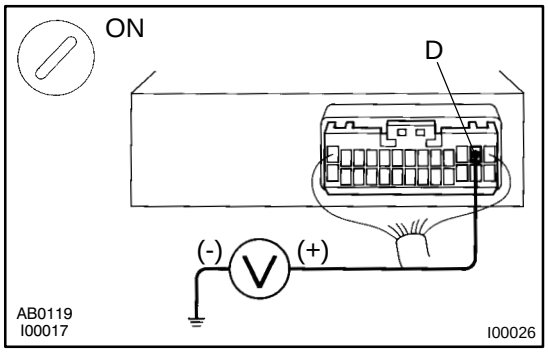

PREPARATION:

Remove ECU with connectors still connected.

CHECK:

(a) Turn ignition switch ON.

(b) Measure voltage between terminal D of ECU connector and body ground, when the clutch pedal depressed.

OK:

Switch Position	Voltage
ON (pedal depressed)	Below 1 V
OFF	10 - 16 V

OK → **Proceed to next circuit inspection shown on matrix chart (See page DI-421).**

NG

4	**Check for open in harness and connector between ECU and GAUGE fuse (See page IN-28).**

NG → **Repair or replace harness or connector.**

OK

Check and replace ECU.

DI52G-01

ECM Power Source Circuit

WIRING DIAGRAM

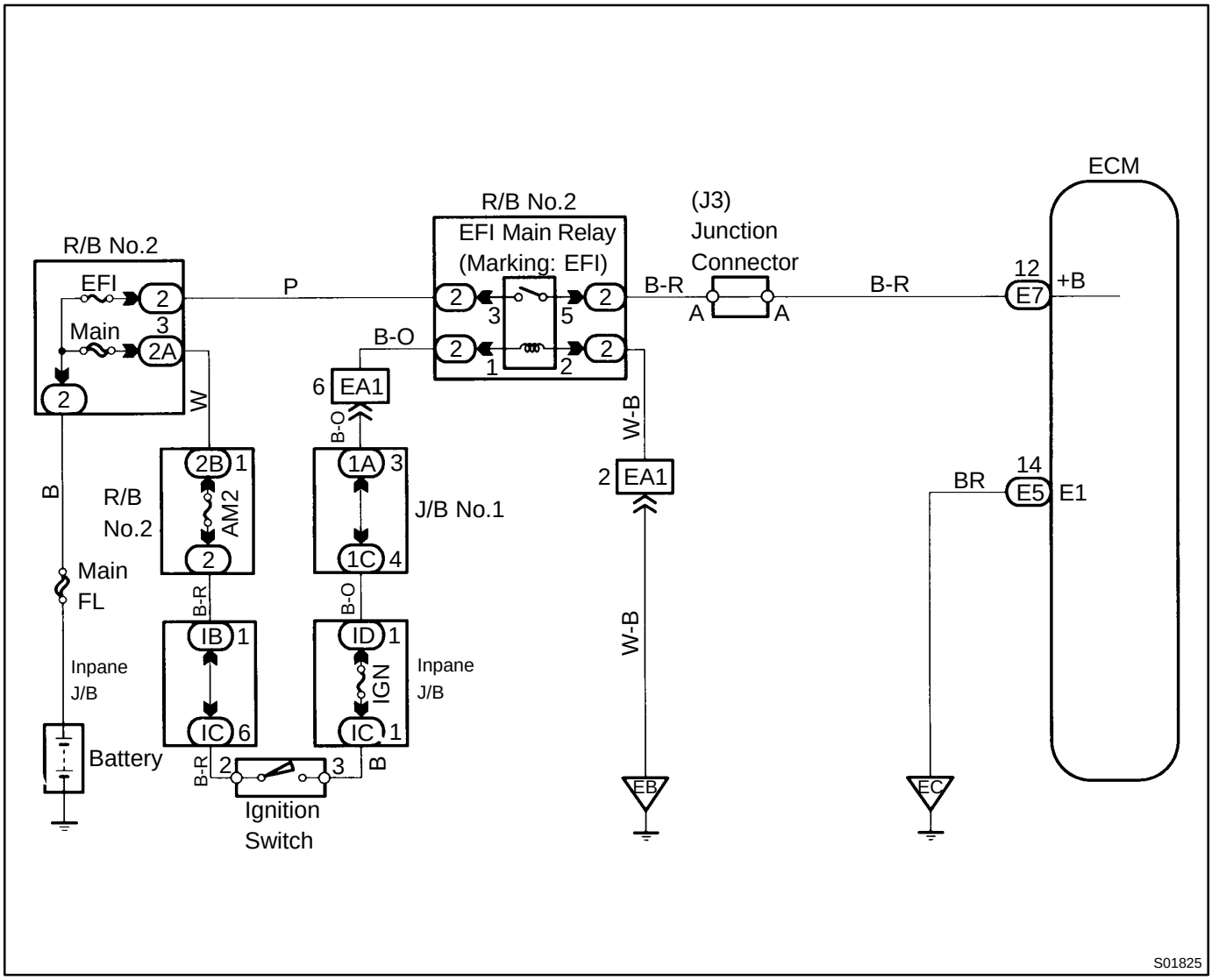

INSPECTION PROCEDURE

1	**Check voltage between terminals +B and E1 of ECM connector.**

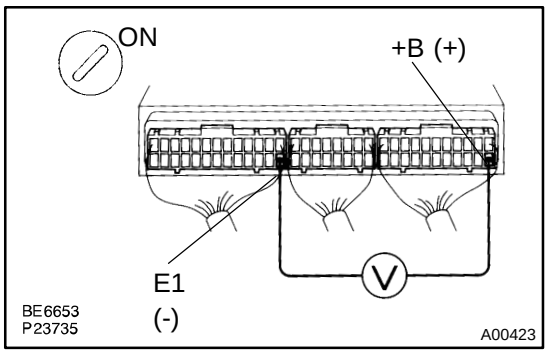

PREPARATION:

(a) Turn up the floor mat on the passenger side.

(b) Turn ignition switch ON.

CHECK:

Measure voltage between terminals +B and E1 of ECM connector.

OK:

Voltage: 9 - 14 V

OK → **Proceed to next circuit inspection shown on matrix chart (See page DI-127).**

NG

2	**Check for open in harness and connector between terminal E1 of ECM and body ground (See page IN-28).**

NG → **Repair or replace harness or connector.**

OK

3	**Check EFI main relay (Marking: EFI) (See page SF-44).**

NG → **Replace EFI main relay.**

OK

4	**Check EFI fuse (See page DI-198 , step 2).**

NG → **Check for short in all the harness and components connected to EFI fuse.**

OK

5	**Check for open in harness and connector between EFI main relay (Marking: EFI) and battery, EFI main relay (Marking: EFI) and ECM (See page IN-28).**

NG → **Repair or replace harness or connector.**

OK

6	**Check IGN fuse.**

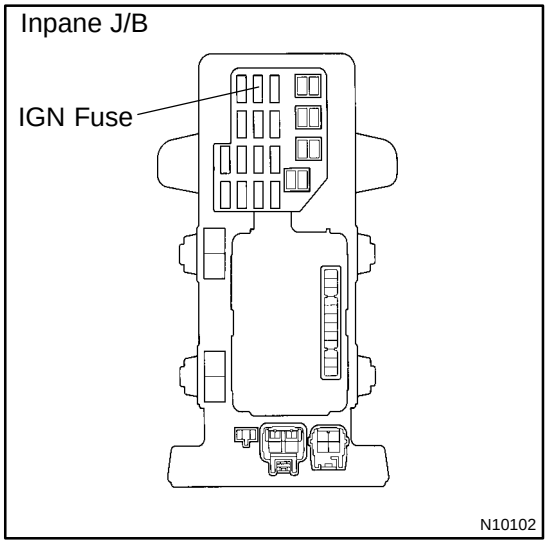

PREPARATION:
Remove IGN fuse from inpane J/B.
CHECK:
Check continuity of IGN fuse.
OK:
Continuity

NG → **Check for short in all the harness and components connected to IGN fuse.**

OK

7	**Check ignition switch (See page BE-12).**

NG → **Replace ignition switch.**

OK

Check for open in harness and connector between IG switch and EFI main relay and body ground (See page IN-28).

DI51F-02

ECM Power Source Circuit

CIRCUIT DESCRIPTION

When the ignition switch is turned ON, battery positive voltage is applied to the coil, closing the contacts of the EFI main relay and supplying power to the terminal +B of the ECM.

WIRING DIAGRAM

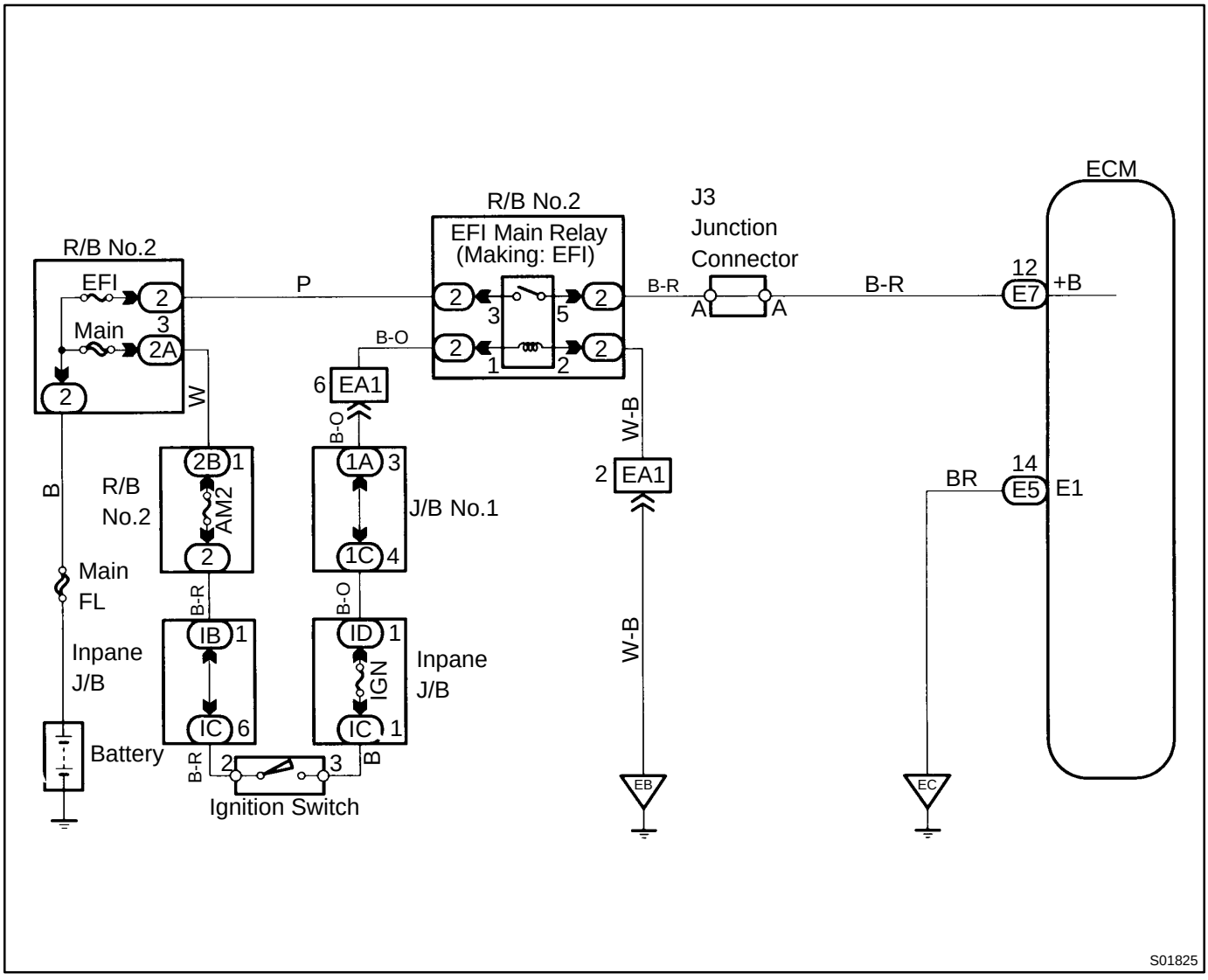

INSPECTION PROCEDURE

1	**Check voltage between terminals + B and E1 of ECM connector.**

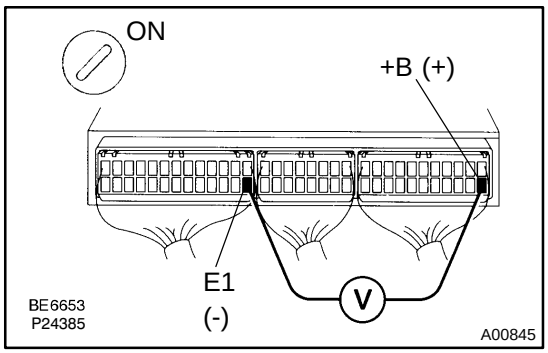

PREPARATION:

(a) Turn up the floor mat on the passenger side.

(b) Turn ignition switch ON.

CHECK:

Measure voltage between terminals + B and E1 of ECM connector.

OK:

Voltage: 9 - 14 V

OK	**Proceed to next circuit inspection shown on matrix chart (See page DI-20).**

NG

2	**Check for open in harness and connector between terminal E1 of ECM and body ground (See page IN-28).**

NG	**Repair or replace harness or connector.**

OK

3	**Check EFI main relay (Marking: EFI) (See page SF-43).**

NG	**Replace EFI main relay.**

OK

4	**Check EFI fuse (See page DI-93).**

NG	**Check for short in all the harness and components connected to EFI fuse.**

OK

5	Check for open in harness and connector between EFI main relay (Marking: EFI) and battery, EFI main relay (Marking: EFI) and ECM (See page IN-28).

NG → Repair or replace harness or connector.

OK ↓

6	Check IGN fuse of J/B No.1.

NG → Check for short in all the harness and components connected to IGN fuse.

OK ↓

7	Check ignition switch (See page BE-12).

NG → Replace ignition switch.

OK ↓

Check for open in harness and connector between IG switch and EFI main relay (Marking: EFI), EFI main relay (Marking: EFI) and body ground (See page IN-28).

DI54W-02

Electronically Controlled Transaxle Communication Circuit

CIRCUIT DESCRIPTION

When driving uphill under cruise control, in order to reduce shifting due to ON-OFF overdrive operation and to provide smooth driving, when down shifting in the electronically controlled trasaxle occurs, a signal to prevent upshift until the end of the uphill slope is sent from the cruise control ECU to the electronically controlled transaxle.

Terminal ECM of the cruise control ECU detects the shift change signal (output to electronically controlled transaxle No.2 solenoid) from the electronically controlled transaxle.

If vehicle speed down, also when terminal electronically controlled transaxle of the cruise control ECU receives down shifting signal, it sends a signal from terminal OD to OD1 to cut overdrive until the end of the uphill slope, and the gear shits are reduced and gear shift points in the electronically controlled transaxle are changed.

WIRING DIAGRAM

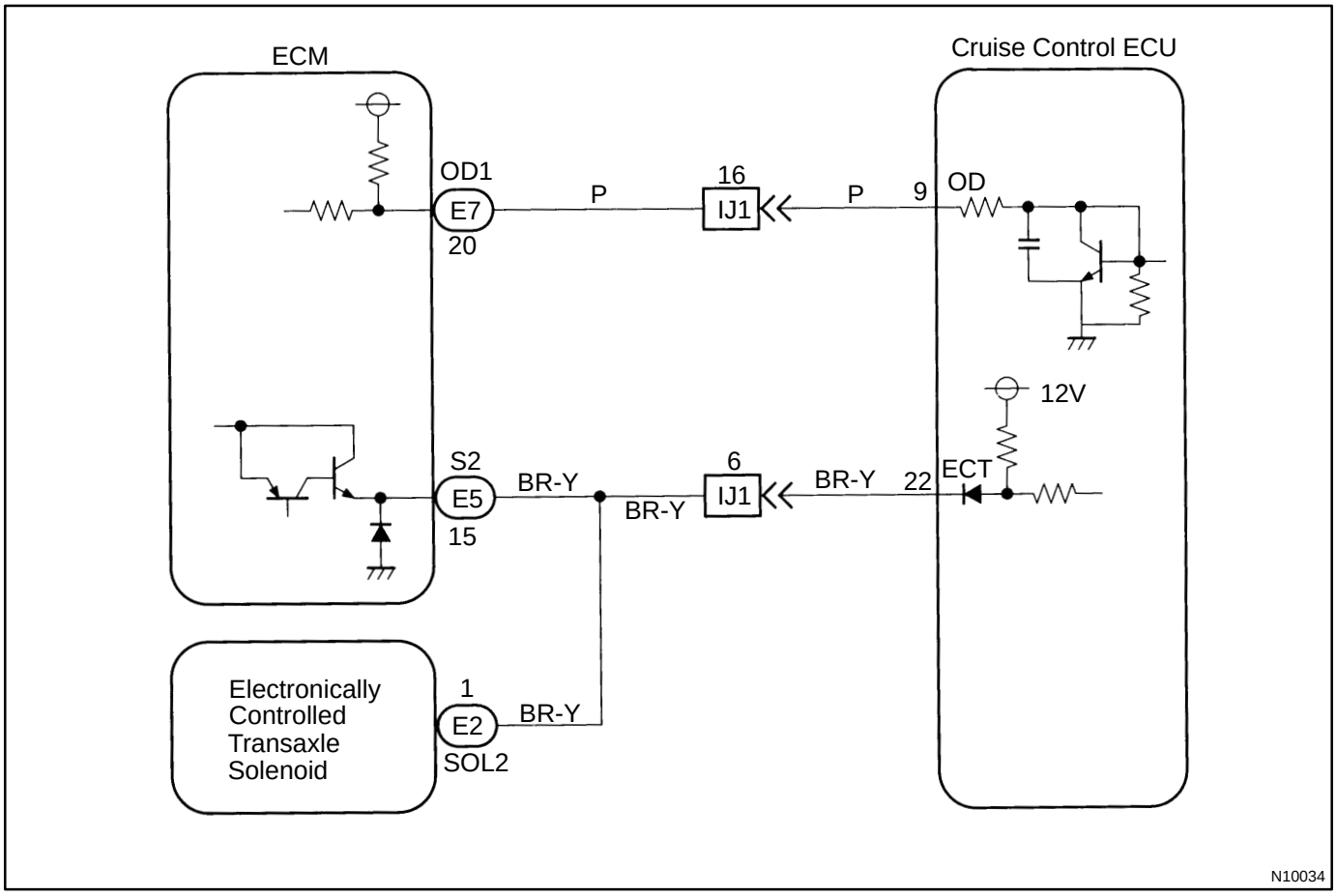

INSPECTION PROCEDURE

1	**Check operation of overdrive.**

PREPARATION:
Test drive after engine warm up.
CHECK:
Check that overdrive ON ↔ OFF occurs with operation of OD switch ON-OFF.

NG → **Check and repair electronically controlled transaxle (A140E: See page DI-217 , A246E: See page DI-260).**

OK

2	**Check voltage between terminal OD of harness side connector of ECU and body ground.**

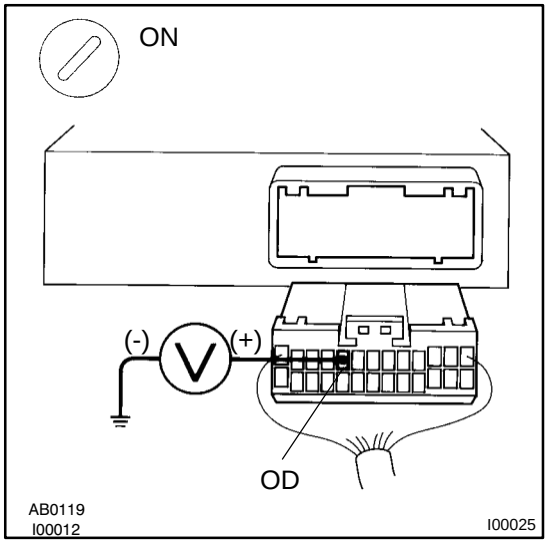

PREPARATION:
Remove the ECU with connector still connected.
CHECK:
(a) Disconnect ECU connector.
(b) Turn ignition switch ON.
(c) Measure voltage between terminal OD of harness side connector of ECU and body ground.
OK:
Voltage: 10 - 16 V

NG → **Go to step 5.**

OK

3	**Check voltage between terminal ECT of cruise control ECU connector and body ground (On test drive).**

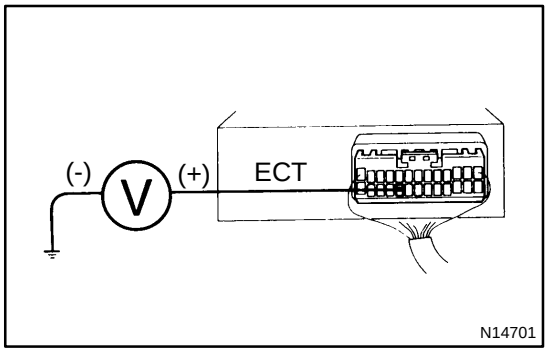

PREPARATION:

(a) Connect the ECU connector.

(b) Test drive after engine warm up.

CHECK:

Check voltage between terminal ECT of cruise control ECU connector and body ground when OD switch is ON and OFF.

OK:

Gear Position	Voltage
O/D	Below 1 V
3rd	10 -16 V

OK → **Proceed to next circuit inspection shown on matrix chart (See page DI-421).**

NG

4	**Check for open and short in harness and connector between terminal ECT of cruise control ECU and electronically controlled transaxle solenoid (See page IN-28).**

NG → **Repair or replace harness or connector.**

OK

Check and replace ECU.

5	**Check for open and short in harness and connector between terminal OD of ECU and terminal OD1 of ECM (See page IN-28).**

NG → **Repair or replace harness or connector.**

OK

Check and replace ECU.

DI54Z-01

ECU Power Source Circuit

CIRCUIT DESCRIPTION

The ECU power source supplies power to the actuator and sensors, etc., Terminal GND and the cruise control ECU case are grounded.

WIRING DIAGRAM

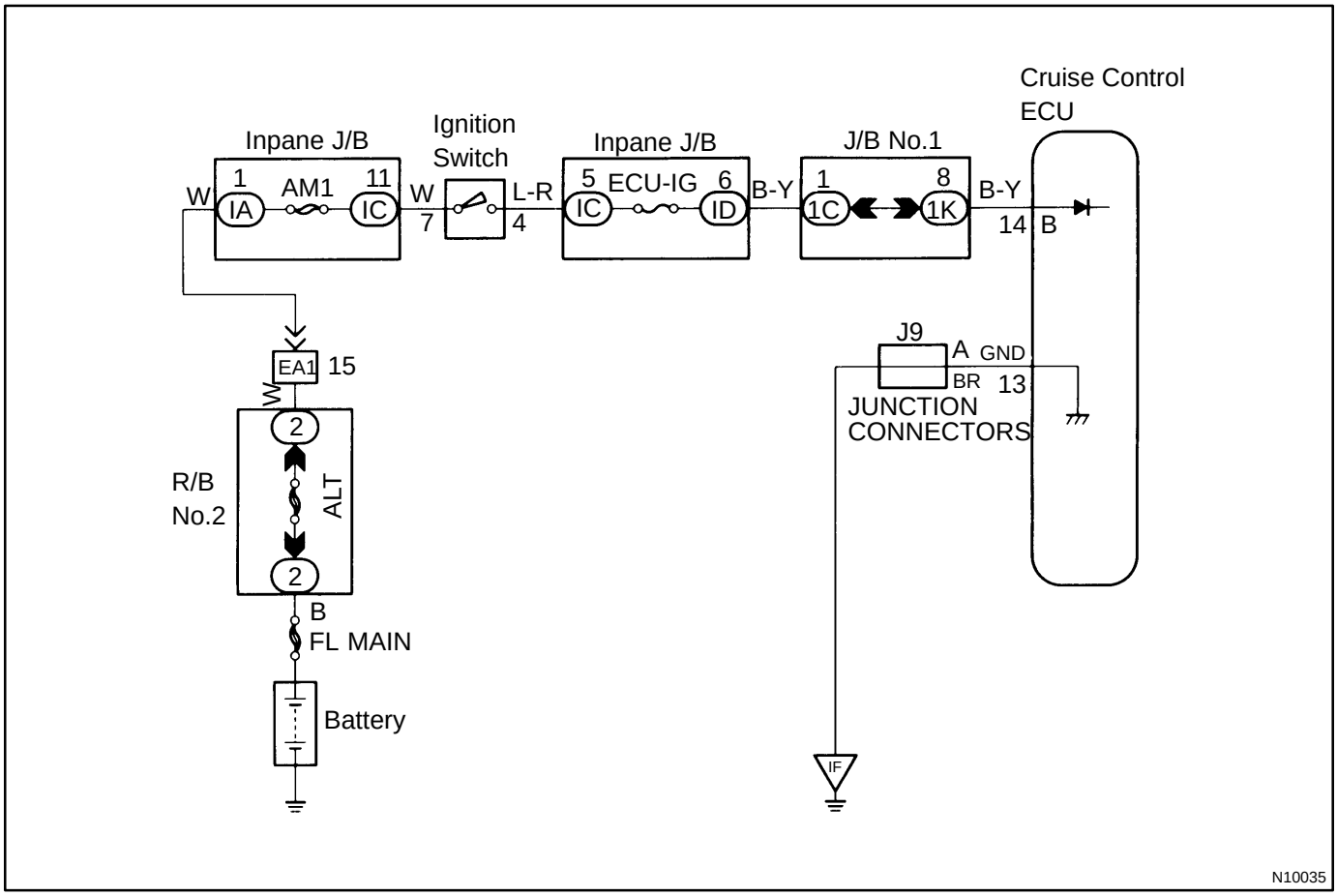

INSPECTION PROCEDURE

1	**Check ECU-IG fuse.**

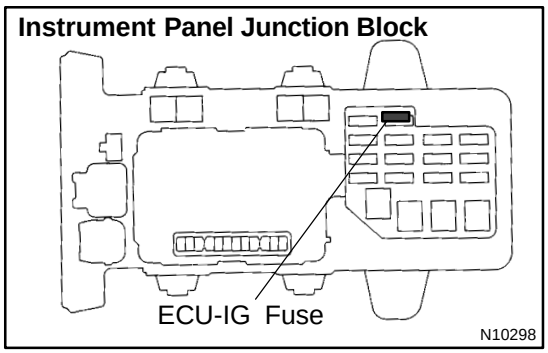

PREPARATION:
Remove ECU-IG fuse from instrument panel junction block.
CHECK:
Check continuity of ECU-IG fuse.
OK:
Continuity

NG	**Check for short in all the harness and components connected to the ECU-IG fuse. (See attached wiring diagram).**

OK

2	**Check voltage between terminals B and GND of ECU connector.**

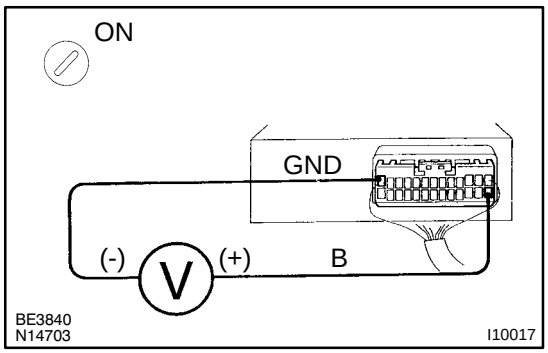

PREPARATION:
Remove ECU with connectors still connected.
CHECK:
(a) Turn ignition switch ON.
(b) Measure voltage between terminals B and GND of ECU connector.
OK:
Voltage: 10 - 16 V

OK	**Proceed to next circuit inspection shown on matrix chart (See page DI-421).**

NG

3	Check continuity between terminal GND of ECU connector and body ground.

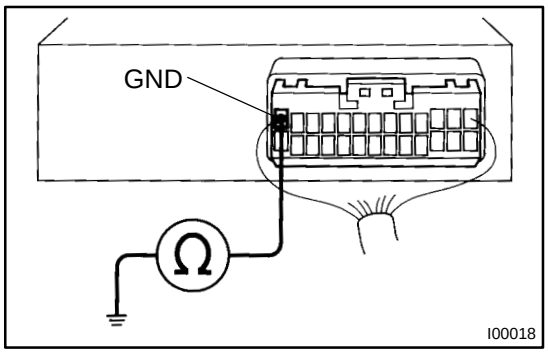

CHECK:

Measure resistance between terminal GND of cruise control ECU connector and body ground.

OK:

Resistance: 1 Ω or less

NG → **Repair or replace harness or connector.**

OK

Check and repair harness and connector between battery and ECU.

DI52H-02

Fuel Pump Control Circuit

CIRCUIT DESCRIPTION

In the diagram below, when the engine is cranked, current flows from terminal ST of the ignition switch to the starter relay coil, the starter relay switches on and current flows to coil L1 of the circuit opening relay. Thus the circuit opening relay switches on, power is supplied to the fuel pump and the fuel pump operates. When the STA signal and NE signal are input to the ECM, Tr is turned ON, current flows to coil L2 of the circuit opening relay, the relay switches on and the fuel pump operates.
While the NE signal is generated (engine running), the ECM keeps Tr ON (circuit opening relay ON) and the fuel pump also keeps operating.

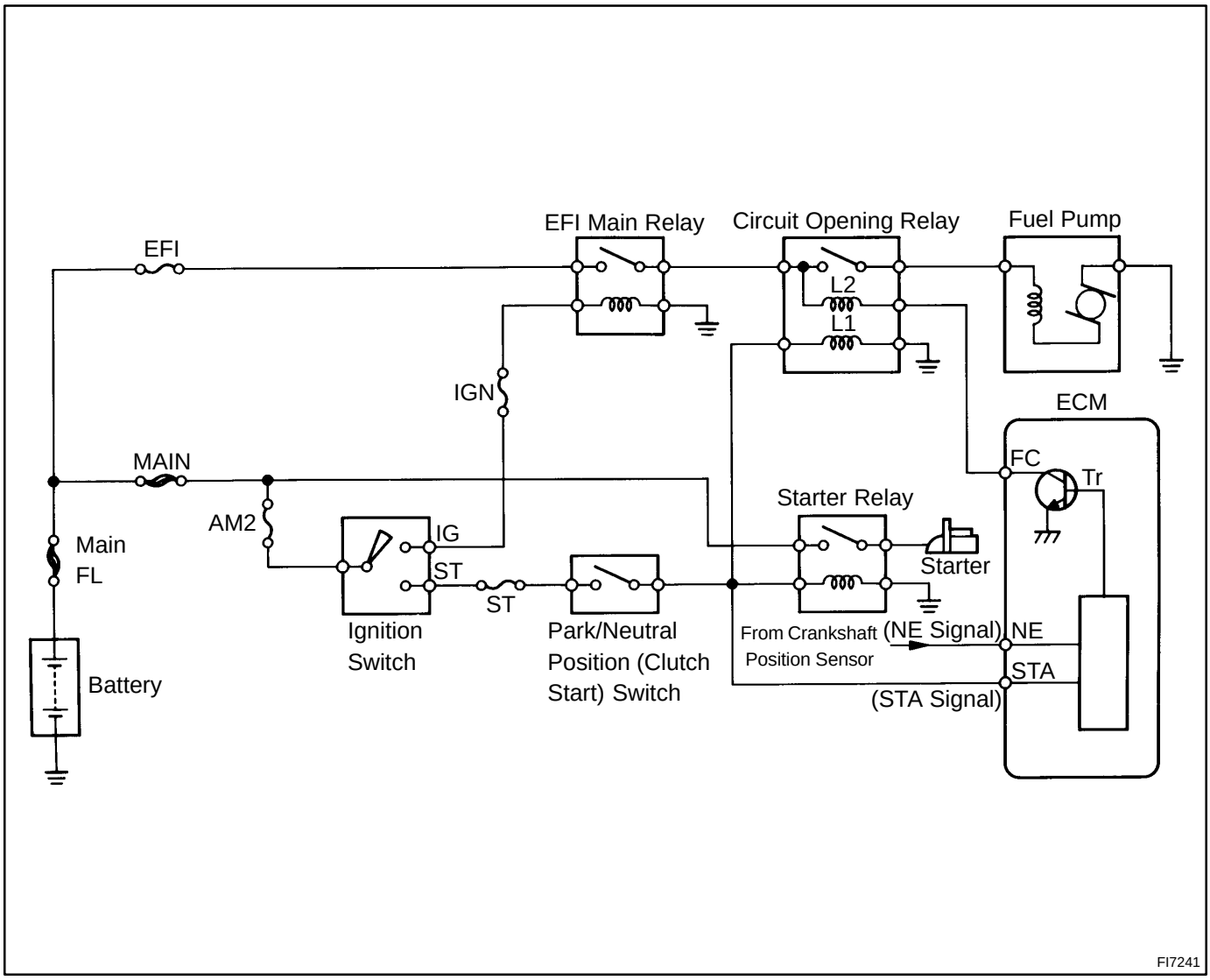

WIRING DIAGRAM

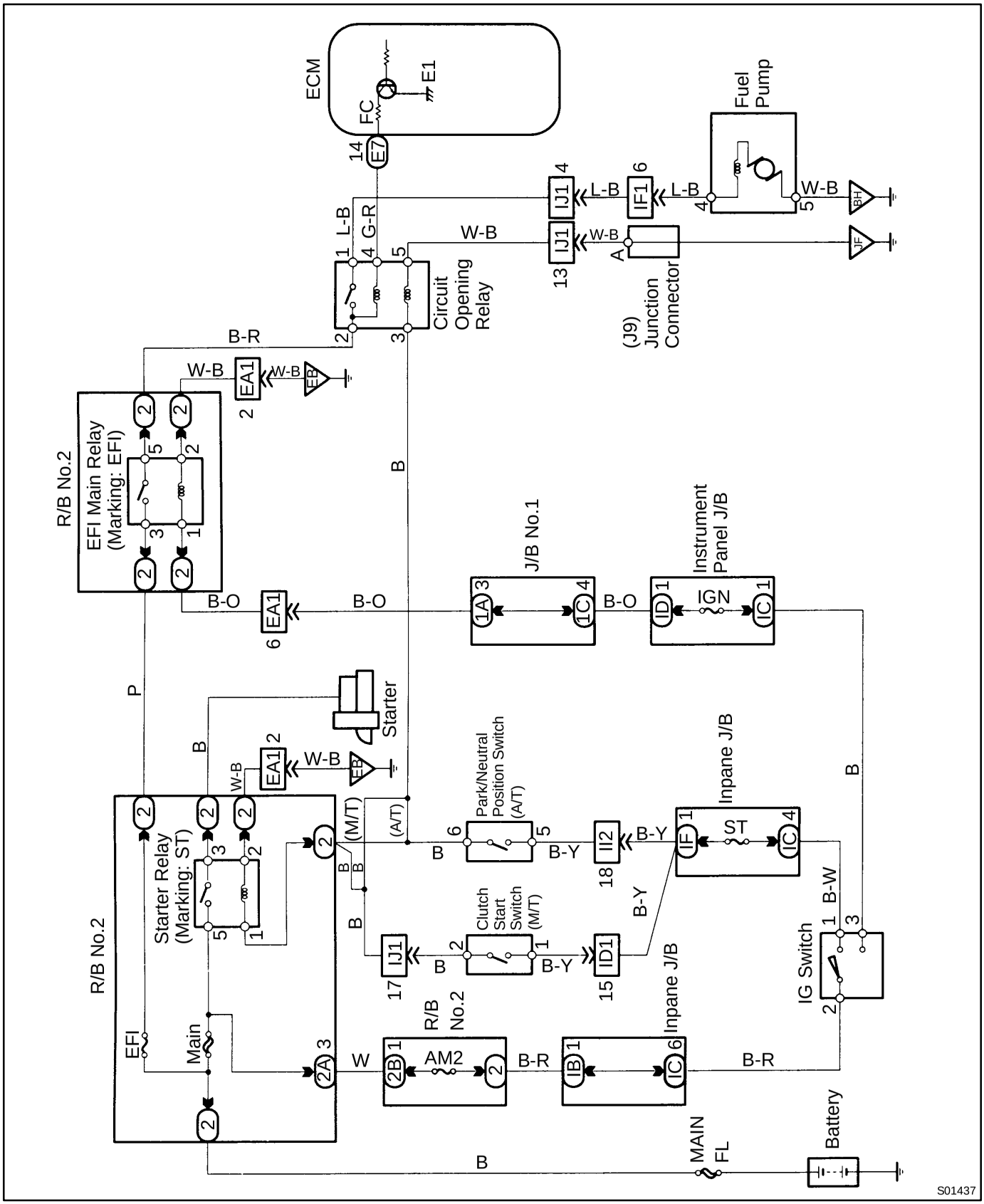

INSPECTION PROCEDURE
TOYOTA hand-held tester:

1	Connect the TOYOTA hand-held tester and check operation of fuel pump (See page SF-6).

OK → Go to step 7.

NG

2	Check for ECM power source circuit (See page DI-203).

NG → Repair or replace.

OK

3	Check circuit opening relay (See page SF-46).

NG → Replace circuit opening relay.

OK

4	**Check voltage between terminal FC of ECM and body ground.**

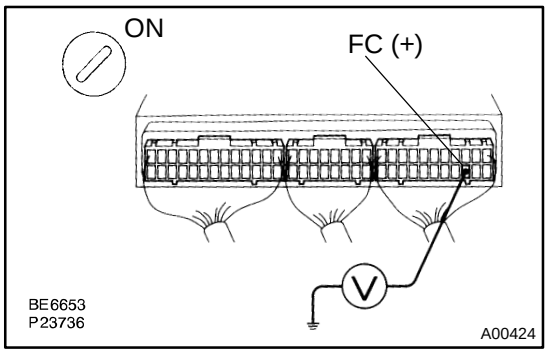

PREPARATION:

(a) Turn up the floor mat on the passenger side.

(b) Turn ignition switch ON.

CHECK:

Measure voltage between terminal FC of ECM and body ground.

OK:

Voltage 9 - 14 V

NG → **Check for open in harness and connector between EFI main relay (Marking: EFI) and circuit opening relay, circuit opening relay and ECM.**

OK

5	**Check fuel pump (See page SF-6).**

NG → **Repair or replace fuel pump.**

OK

6	**Check for open in harness and connector between circuit opening relay and fuel pump, fuel pump and body ground (See page IN-28).**

NG → **Repair or replace harness or connector.**

OK

Check and replace ECM.

7	**Check circuit opening relay (See page SF-46).**

NG → **Replace circuit opening relay.**

OK

8	**Check voltage between terminal 3 of circuit opening relay connector and body ground.**

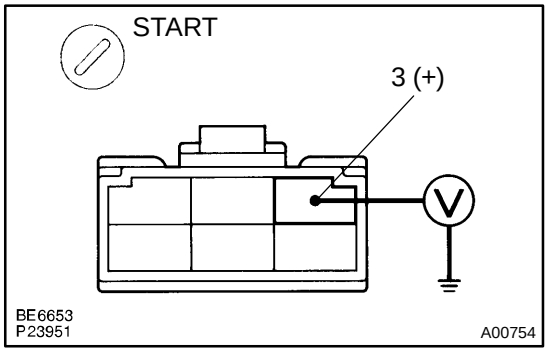

CHECK:

Measure voltage between terminal 3 of circuit opening relay connector and body ground when engine is cranked.

OK:

Voltage: 9 - 14 V

NG → **Check for starter signal circuit (See page DI-196).**

OK

Check for open in harness and connector between terminal 6 of circuit opening relay connector and body ground (See page IN-28).

OBD II scan tool (excluding TOYOTA hand-held tester):

1	**Check fuel pump operation.**

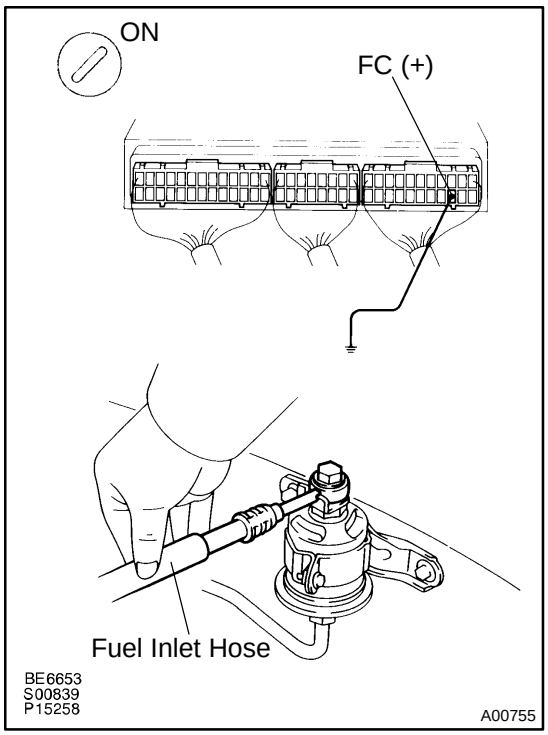

PREPARATION:

(a) Turn up the floor mat on the passenger side.

(b) Turn ignition switch ON.

CHECK:

(a) Connect between terminal FC of ECM connector and body ground.

(b) Check for fuel pressure in the inlet hose when it is pinched off.

OK:

There is pressure in the inlet hose.

HINT:

At this time, you will hear a fuel flowing noise.

OK	**Go to step 7.**

NG

2	**Check for ECM power source circuit (See page DI-203).**

NG	**Repair or replace.**

OK

3	**Check circuit opening relay (See page SF-46).**

NG	**Replace circuit opening relay.**

OK

4	Check voltage between terminal FC of ECM and body ground (See page DI-206 , step 4).

NG → Check for open in harness and connector between EFI main relay (Marking: EFI) and circuit opening relay, circuit opening relay and ECM.

OK ↓

5	Check fuel pump (See page SF-6).

NG → Repair or replace fuel pump.

OK ↓

6	Check for open in harness and connector between circuit opening relay and fuel pump, fuel pump and body ground (See page IN-28).

NG → Repair or replace harness or connector.

OK ↓

Check and replace ECM.

7	Check circuit opening relay (See page SF-46).

NG → Replace circuit opening relay.

OK ↓

8	**Check voltage between terminal 3 of circuit opening relay connector and body ground (See page DI-206 , step 8).**

NG → **Check for starter signal circuit (See page DI-196).**

OK

Check for open in harness and connector between terminal 6 of circuit opening relay connector and body ground (See page IN-28).

DI51G-02

Fuel Pump Control Circuit

CIRCUIT DESCRIPTION

Fuel pump control

The fuel pump is switched on (low voltage at terminal FC) when STA is on or while the NE signal is input to the ECM.

In the diagram below, when the engine is cranked, current flows from terminal ST of the ignition switch to the starter relay coil, the starter relay switches on and current flows to coil L1 of the circuit opening relay. Thus the circuit opening relay switches on, power is supplied to the fuel pump and the fuel pump operates. When the STA signal and NE signal are input to the ECM, Tr is turned ON, current flows to coil L2 of the circuit opening relay, the relay switches on and the fuel pump operates.

While the NE signal is generated (engine running), the ECM keeps Tr ON (circuit opening relay ON) and the fuel pump also keeps operating.

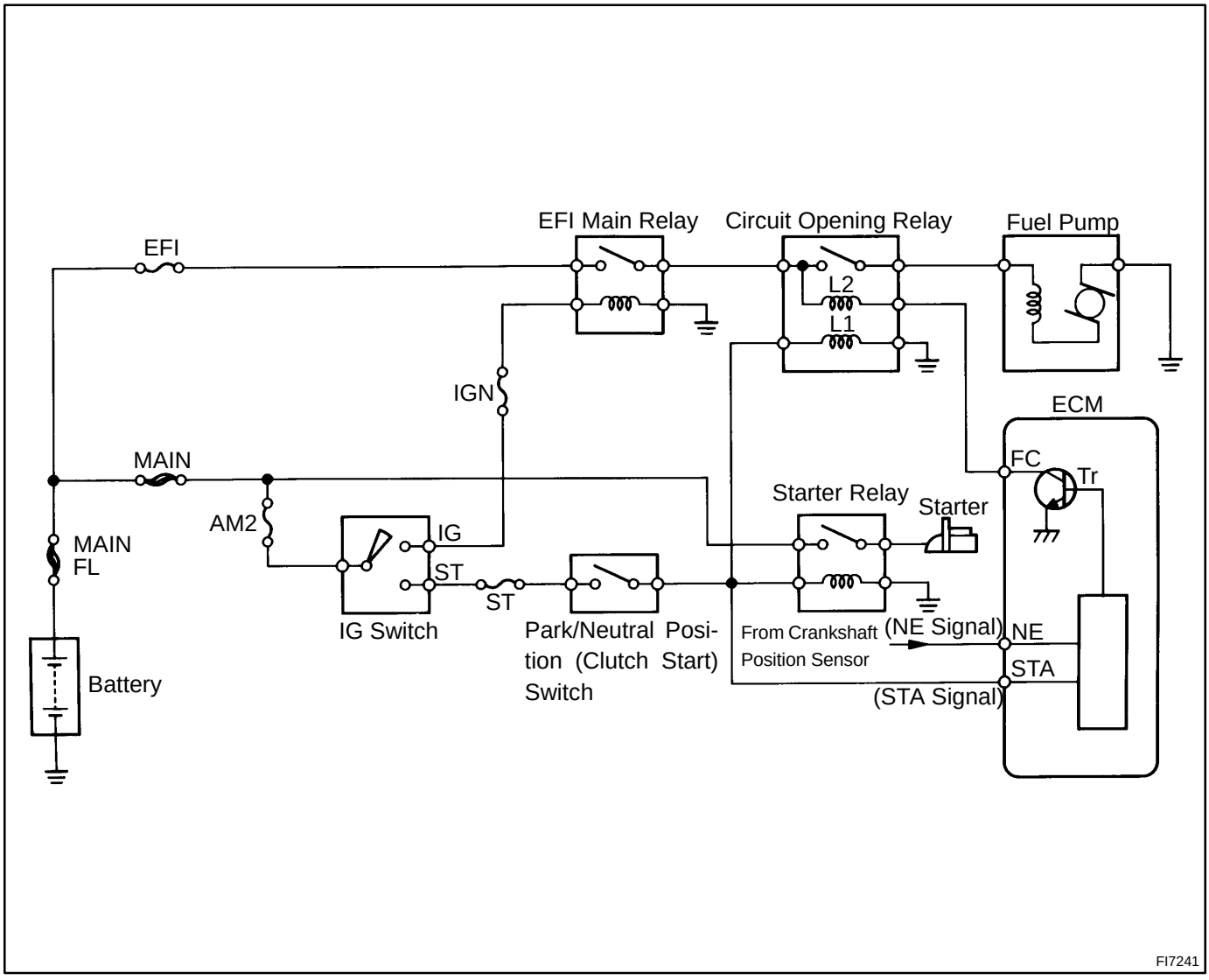

WIRING DIAGRAM

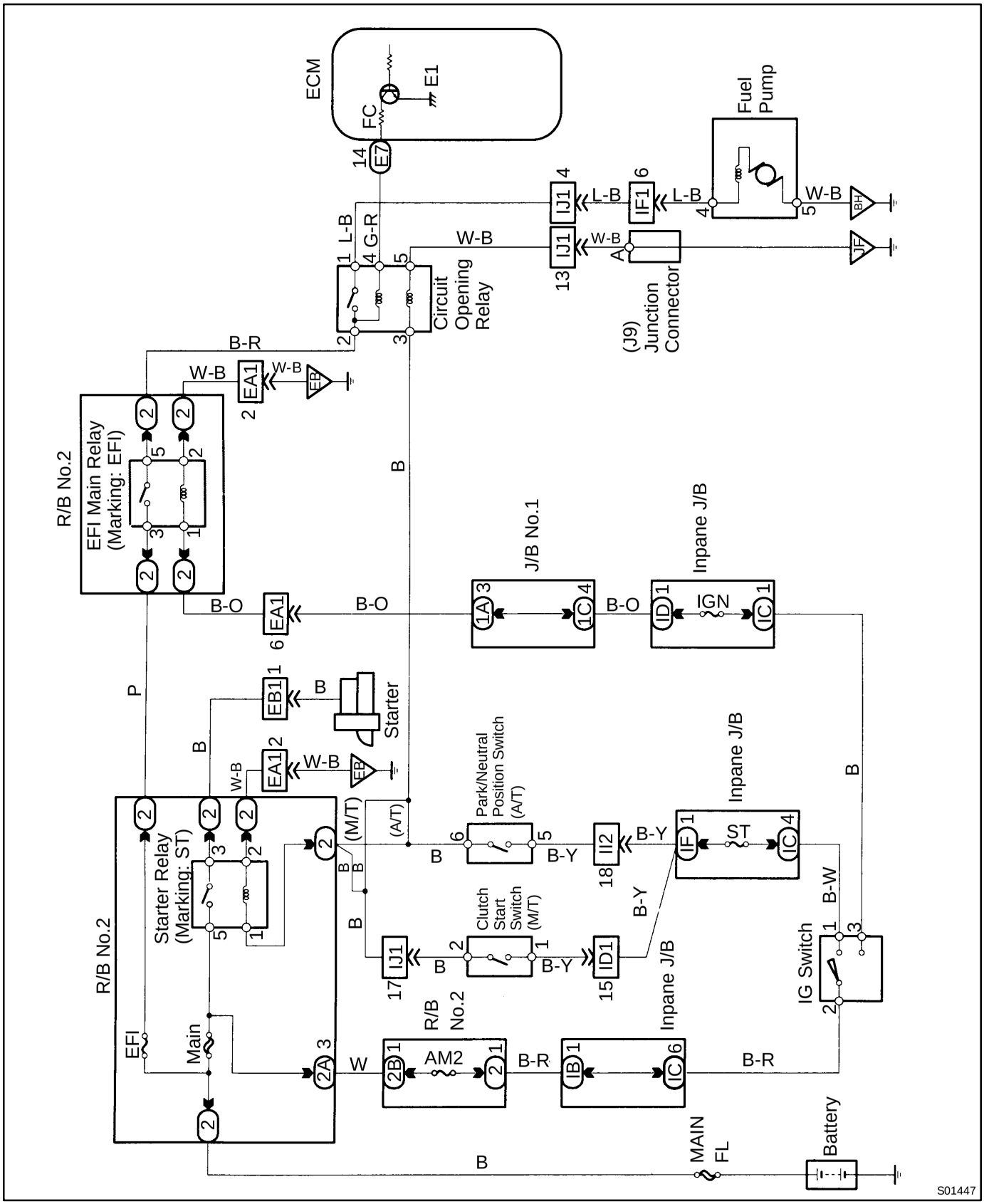

INSPECTION PROCEDURE
TOYOTA hand-held tester:

1	**Connect the TOYOTA hand-held tester and check operation of fuel pump.**

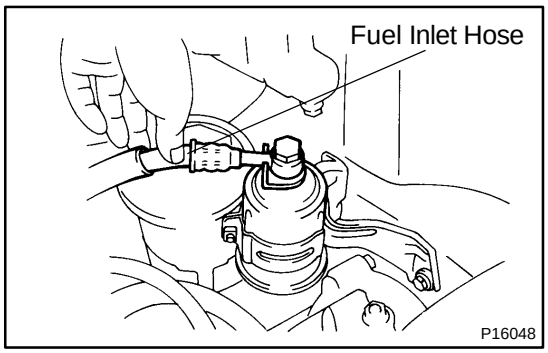

PREPARATION:
(a) Connect the TOYOTA hand-held tester to the DLC3.
(b) Turn ignition switch ON and push TOYOTA hand-held tester main switch ON.
(c) Use ACTIVE TEST mode to operate the fuel pump.

CHECK:
Check for fuel pressure in the fuel inlet hose when it pinched off.

OK:
There is pressure in the fuel inlet hose.

HINT:
At this time, you will hear a fuel following noise.

OK	**Check for starter signal circuit (See page DI-89).**

NG

2	**Check for ECM power source circuit (See page DI-96).**

NG	**Repair or replace.**

OK

3	**Check circuit opening relay (See page SF-43).**

NG	**Replace circuit opening relay.**

OK

4	**Check voltage between terminal FC of ECM and body ground.**

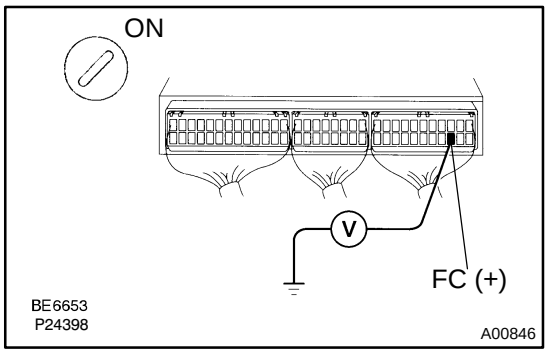

PREPARATION:

(a) Turn up the floor mat on the passenger side.

(b) Turn ignition switch ON.

CHECK:

Measure voltage between terminal FC of ECM and body ground.

OK:

Voltage 9 - 14 V

NG → **Check for open in harness and connector between EFI main relay (Making: EFI) and circuit opening relay, circuit opening relay and ECM.**

OK

5	**Check fuel pump (See page SF-5).**

NG → **Repair or replace fuel pump.**

OK

6	**Check for open in harness and connector between circuit opening relay and fuel pump, fuel pump and body ground (See page IN-28).**

NG → **Repair or replace harness or connector.**

OK

Check and replace ECM (See page IN-28).

OBD II scan tool (excluding TOYOTA hand-held tester):

1	**Check of fuel pump operation.**

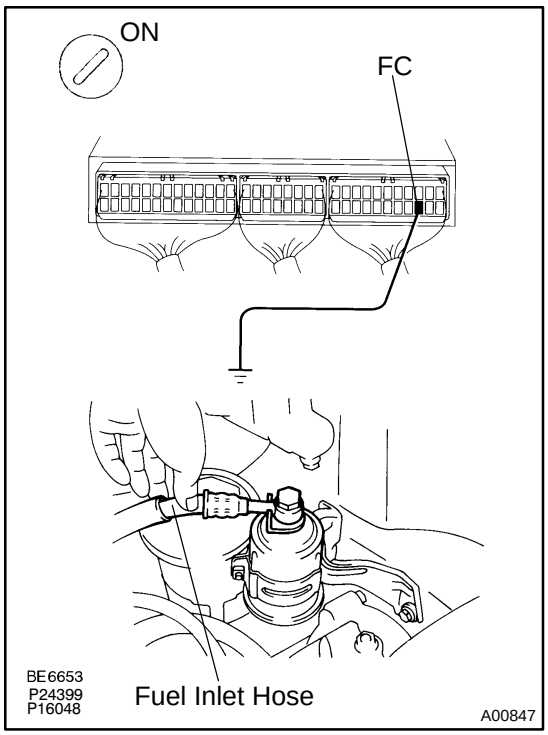

PREPARATION:

(a) Turn up the floor mat on the passenger side.

(b) Turn ignition switch ON.

CHECK:

(a) Connect between terminal FC of ECM connector and body ground.

(b) Check for fuel pressure in the inlet hose when it is pinched off.

OK:

There is pressure in the inlet hose.

HINT:

At this time, you will hear a fuel flowing noise.

OK	**Check for starter signal circuit (See page DI-20).**

NG

2	**Check for ECM power source circuit (See page DI-96).**

NG	**Repair or replace.**

OK

3	**Check circuit opening relay (See page SF-43).**

NG	**Replace circuit opening relay.**

OK

4	Check voltage between terminal FC of ECM and body ground (See page DI-99).

NG → Check for open in harness and connector between EFI main relay and circuit opening relay, circuit opening relay and ECM.

OK

5	Check fuel pump (See page SF-5).

NG → Repair or replace fuel pump.

OK

6	Check for open in harness and connector between circuit opening relay and fuel pump, fuel pump and body ground. (See page IN-28)

NG → Repair or replace harness or connector.

OK

Check and replace ECM.

DI54V-01

Idle Switch Circuit

CIRCUIT DESCRIPTION

When the idle switch is turned ON, a signal is sent to the ECU. The ECU uses this signal to correct the discrepancy between the throttle valve position and the actuator position sensor value to enable accurate cruise control at the set speed. If the idle switch is malfunctioning, problem symptoms also occur in the engine, so also inspect the engine.

WIRING DIAGRAM

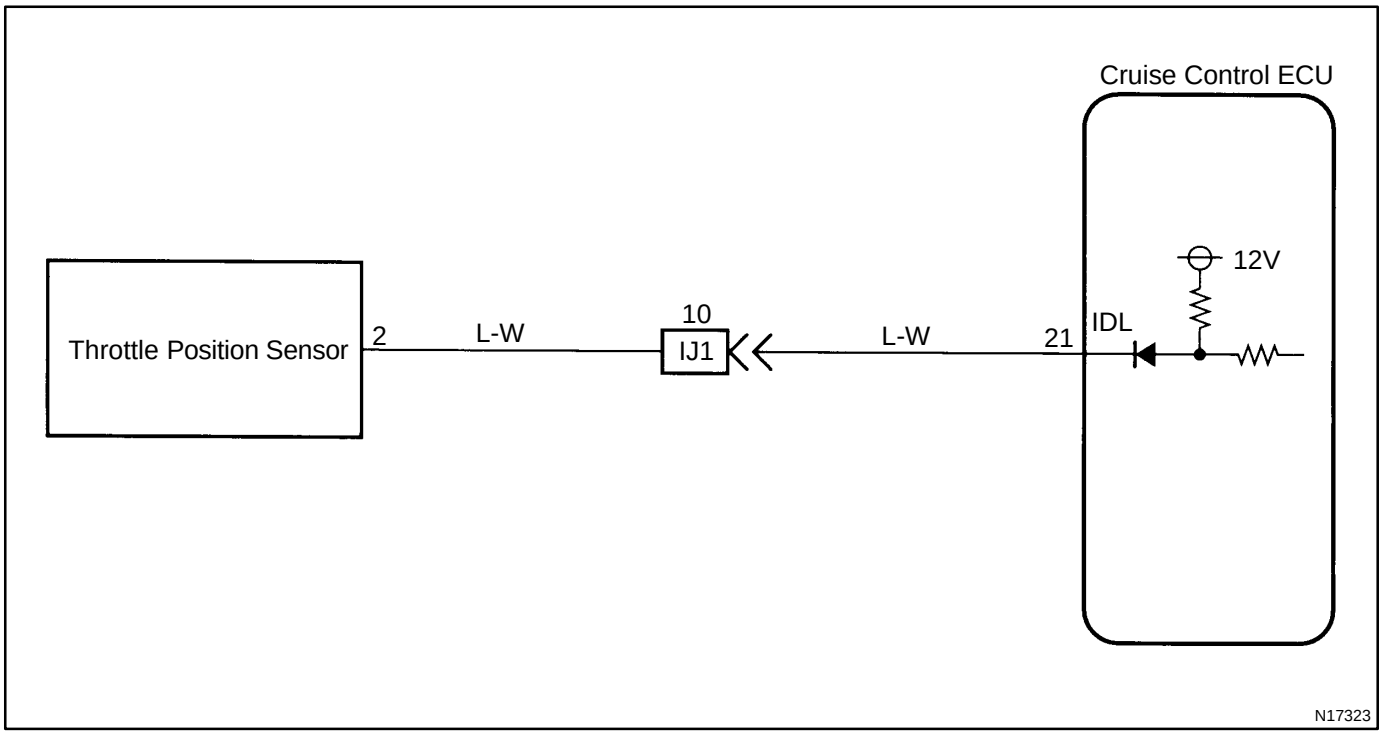

INSPECTION PROCEDURE

1	**Check voltage between terminal IDL of ECU connector and body ground.**

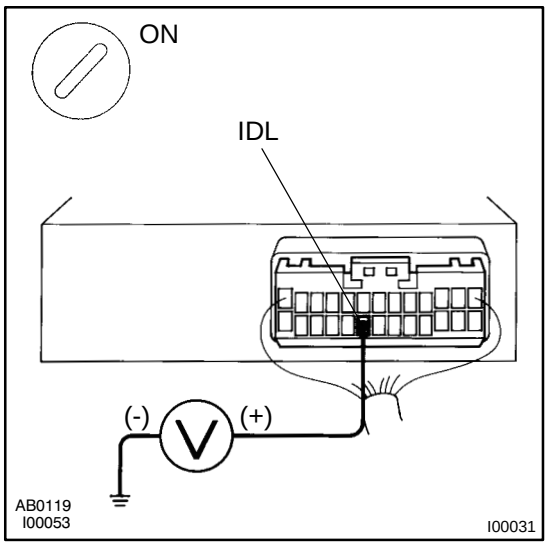

PREPARATION:

(a) Remove ECU cruise control with connectors still connected.

(b) Disconnect the ECM and ABS & TRAC ECU connector.

CHECK:

(a) Turn ignition switch ON.

(b) Measure voltage between terminal IDL of ECU connector and body ground, when the throttle valve is fully closed and fully opened.

OK:

Throttle valve position	Voltage
Fully opened	10 - 16 V
Fully closed	Below 1 V

OK → **Proceed to next circuit inspection shown on matrix chart (See page DI-421).**

NG

2	**Check throttle position sensor.**

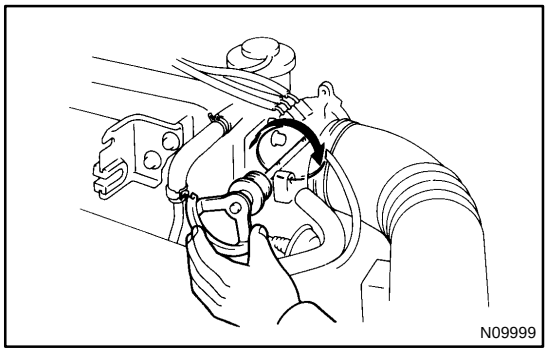

PREPARATION:

Disconnect the throttle position sensor connector.

CHECK:

Measure resistance between terminals 1 and 2 of throttle position sensor connector, when the throttle valve is fully closed and fully opened.

OK:

Throttle valve position	Resistance
Fully opened	1 MΩ or higher
Fully closed	Below 500 Ω

NG → **Replace throttle position sensor.**

OK

3	**Check for open and short in harness and connector between ECU and throttle position sensor, throttle position sensor and body ground (See page IN-28).**

NG → **Repair or replace harness or connector.**

OK

Check and replace ECU.

DI53X-02

Check for Fluid Leakage

Check for fluid leakage from actuator or hydraulic lines.

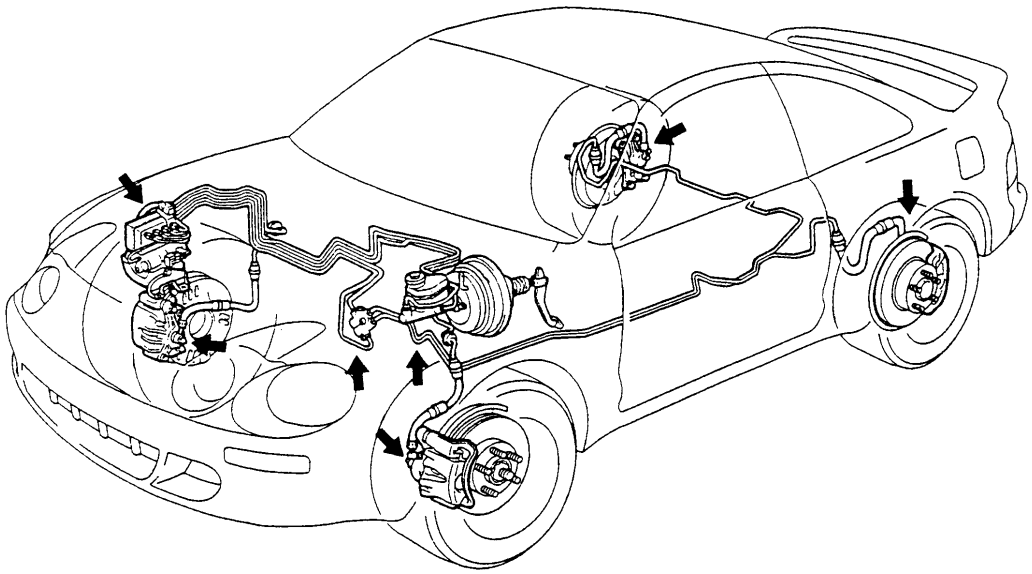

N

F14856

DI551-01

Main Switch Circuit (Cruise Control Switch)

CIRCUIT DESCRIPTION

When the cruise control main switch is turned off, the cruise control does not operate.

WIRING DIAGRAM

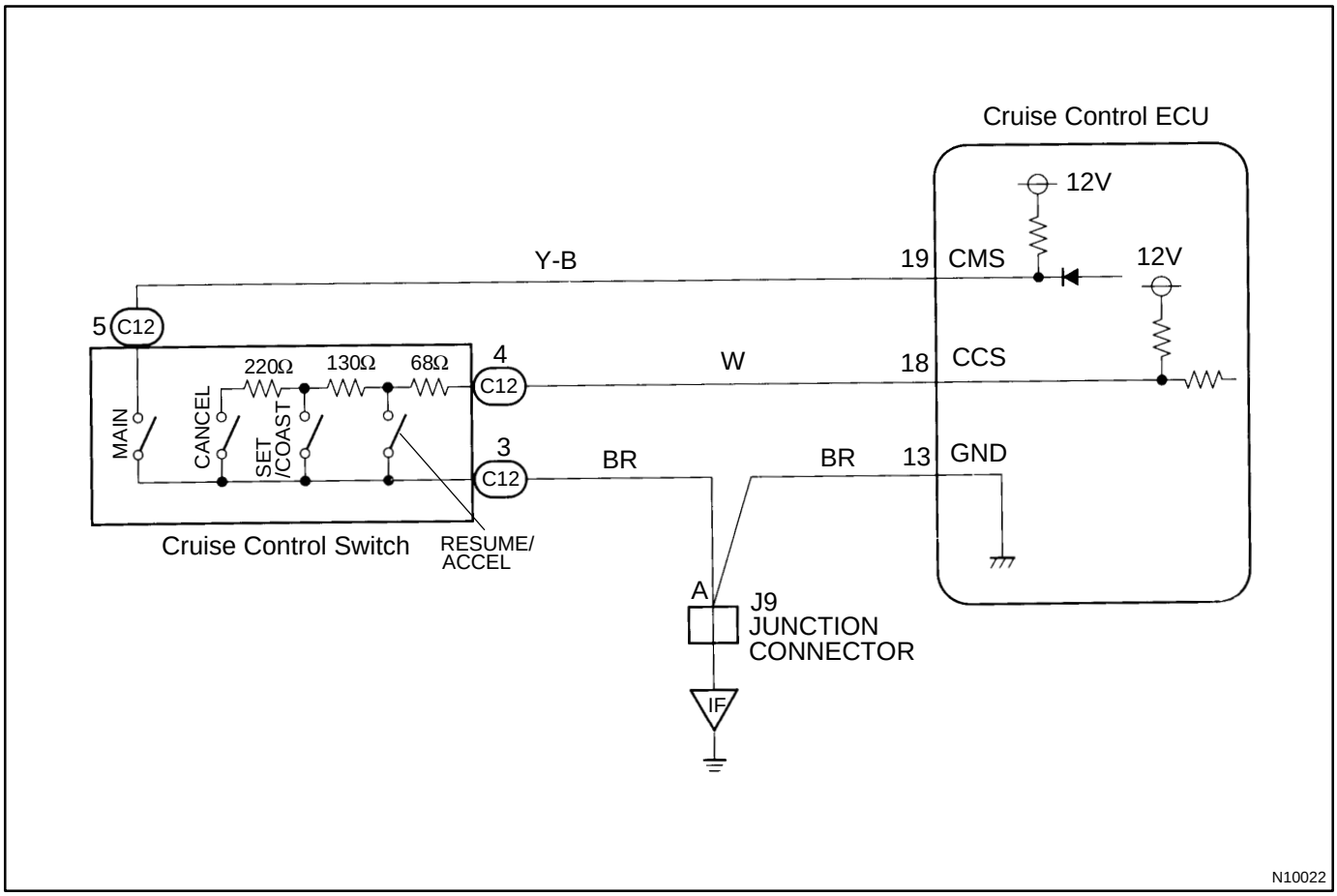

INSPECTION PROCEDURE

1	**Check voltage between terminals CMS and GND of cruise control ECU connector.**

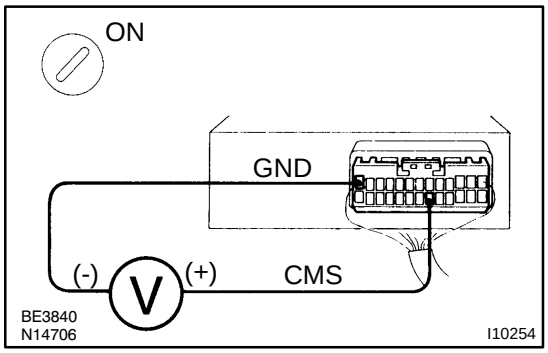

PREPARATION:

Remove cruise control ECU with connectors still connected.

CHECK:

(a) Turn ignition switch ON.

(b) Measure voltage between terminal CMS and GND of cruise control ECU connector when main switch is held ON and OFF.

OK:

Main switch	Voltage
OFF	10 - 16 V
ON	Below 1 V

OK → **Proceed to next circuit inspection shown on matrix chart (See page DI-421).**

NG

2	**Check main switch.**

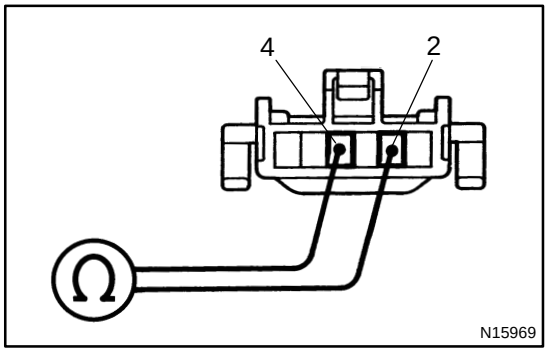

PREPARATION:

(a) Remove steering wheel center pad (See page SR-21).

(b) Disconnect cruise control switch connector.

CHECK:

Check continuity between terminals 2 and 4 of cruise control switch connector when main switch is held ON and OFF.

OK:

Switch position	Tester connection	Specified condition
OFF	-	No continuity
Hold ON	2 - 4	Continuity

NG → **Replace control switch.**

OK

3	**Check harness and connector between cruise control ECU and main switch, main switch and body ground (See page IN-28).**

NG → **Repair or replace harness or connector.**

OK

Check and replace cruise control ECU (See page IN-28).

DI54E-02

DTC Normal Source Voltage Drop

CIRCUIT DESCRIPTION

The SRS is equipped with a voltage-increase circuit (DC-DC converter) in the center airbag sensor assembly in case the voltage source drops.
When the battery voltage drops, the voltage-increase circuit (DC-DC converter) functions to increase the voltage of the SRS to normal voltage.
The diagnostic system malfunction display for this circuit is different to other circuits-when the SRS warning light remains lit up and the DTC is a normal code, source voltage drop is indicated.
Malfunction in this circuit is not recorded in the center airbag sensor assembly, and the source voltage returns to normal, the SRS warning light automatically goes off.

DTC No.	DTC Detecting Condition	Trouble Area
(Normal)	Source voltage drop.	• Battery • Center airbag sensor assembly

WIRING DIAGRAM

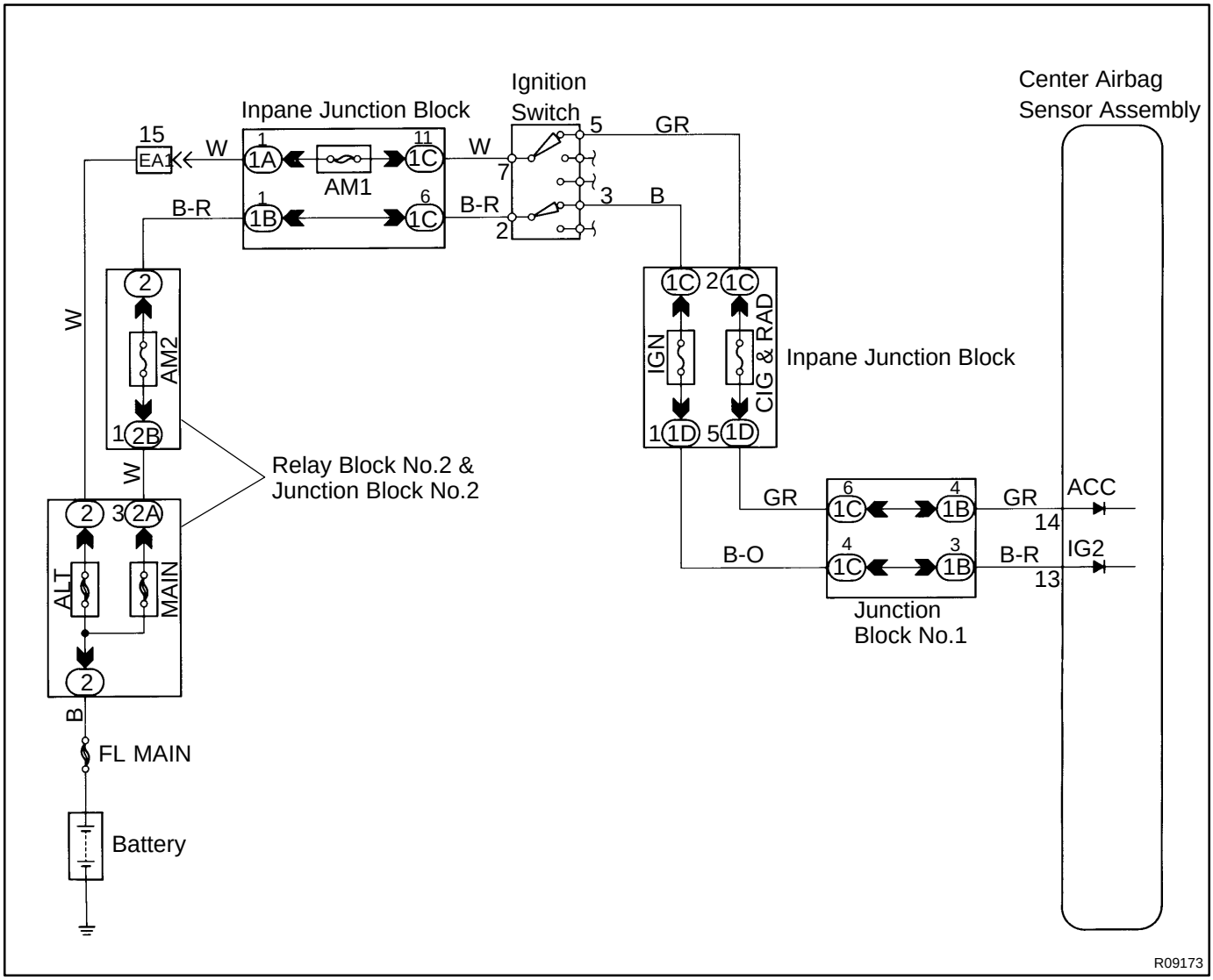

INSPECTION PROCEDURE

1	Preparation.

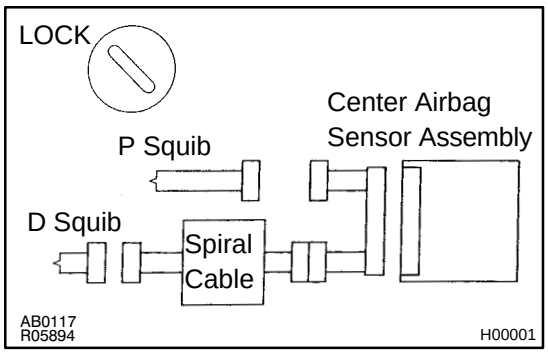

PREPARATION:

(a) Disconnect negative (-) terminal cable from the battery, and wait at least 90 seconds.

(b) Remove the steering wheel pad (See page SR-12 or SR-21).

(c) Disconnect the connector of front passenger airbag assembly (See page RS-21).

(d) Disconnect the connector of center airbag sensor assembly (See page RS-33).

CAUTION:

Store the steering wheel pad with the front surface facing upward.

2	Check source voltage.

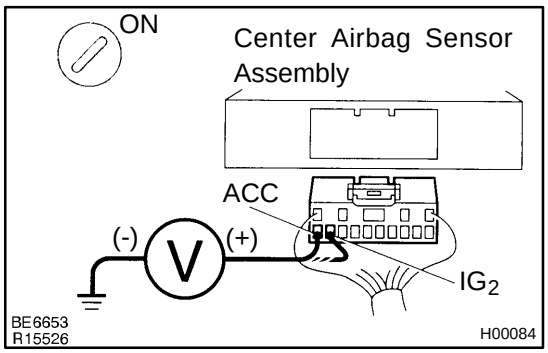

PREPARATION:

(a) Connect negative (-) terminal cable to battery.

(b) Turn the ignition switch ON.

CHECK:

Measure the voltage at IG2 or ACC on sensor and operate electric system (defogger, wiper, headlight, heater blower, etc.).

OK:

Voltage: 10 - 14 V

NG → **Check the harness between battery and center airbag sensor assembly, and check the battery and charging system.**

OK

3	Does SRS warning light turn off?

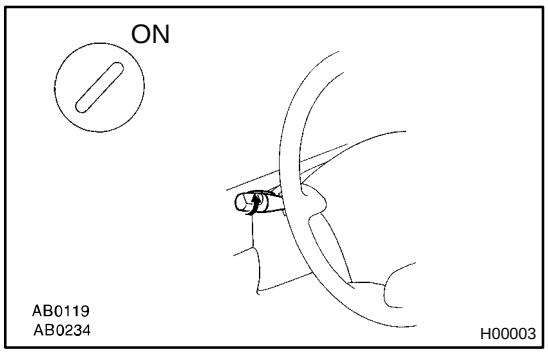

PREPARATION:

(a) Turn the ignition switch to LOCK.
(b) Connect the steering wheel pad connector.
(c) Connect the front passenger airbag assembly connector.
(d) Connect the center airbag sensor assembly connector.
(e) Turn the ignition switch ON.

CHECK:

Operate electric system checked in (defogger, wiper, headlight, heater blower, etc.) and check that SRS warning light goes off.

NO → **Check DTC, and if a malfunction code is output, perform troubleshooting according to malfunction code. If a normal code is output, replace center airbag sensor assembly.**

YES

From the results of the above inspection, the malfunctioning part can now be considered normal. To make sure of this, use the simulation method to check.

DI52X-01

O/D Cancel Signal Circuit

CIRCUIT DESCRIPTION

While driving uphill with cruise control activated, in order to minimize gear shifting and provide smooth cruising, O/D may be prohibited temporarily under some conditions.
The cruise control ECU sends O/D cut signals to the ECM as necessary and the ECM cancels O/D shifting until these signals are discontinued.

WIRING DIAGRAM

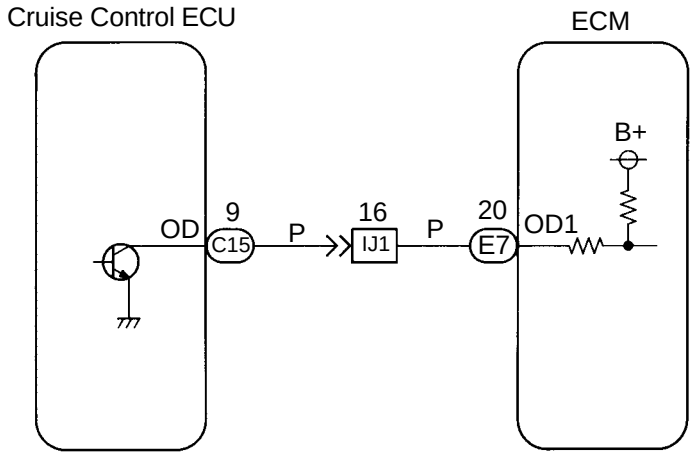

Q05051

INSPECTION PROCEDURE

1	**Check voltage between terminal OD1 of ECM and body ground.**

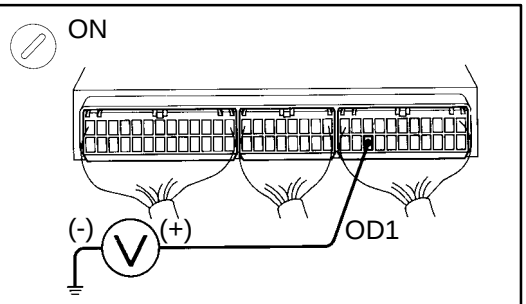

PREPARATION:
Turn the ignition switch ON.
CHECK:
Measure voltage between terminal OD1 of ECM and body ground.
OK:
Voltage: 9 - 14 V

OK	**Proceed to next circuit inspection shown on matrix chart (See page DI-233).**

NG

2	**Check voltage between terminal OD of cruise control ECU harness side connector and body ground.**

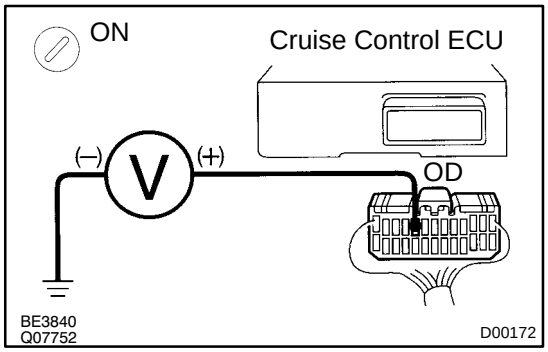

PREPARATION:

(a) Disconnect the cruise control ECU connector.

(b) Turn the ignition switch ON.

CHECK:

Measure voltage between terminal OD of cruise control ECU harness side connector and body ground.

OK:

Voltage: 9 - 14 V

OK → **Check and replace cruise control ECU.**

NG

3	**Check harness and connector between cruise control ECU and ECM (See page IN-28).**

NG → **Repair or replace harness or connector.**

OK

Check and replace ECM.

DI53E-03

O/D Cancel Signal Circuit

CIRCUIT DESCRIPTION

While driving uphill with cruise control activated, in order to minimize gear shifting and provide smooth cruising, O/D may be prohibited temporarily under some conditions.
The cruise control ECU sends O/D cut signals to the ECM as necessary and the ECM cancels O/D shifting until these signals are discontinued.

WIRING DIAGRAM

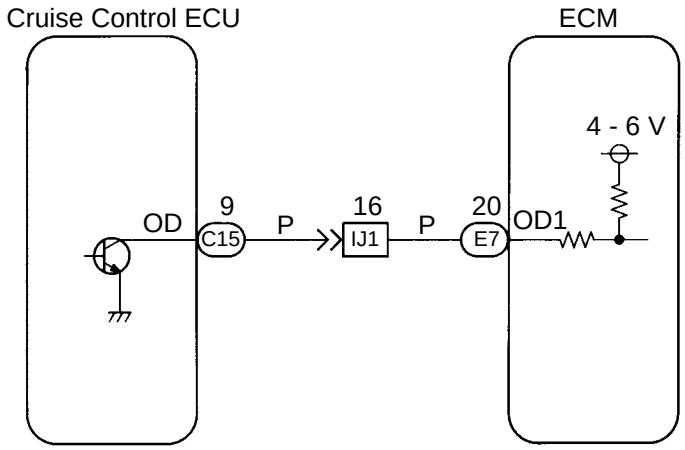

Q05051

INSPECTION PROCEDURE

1	**Check voltage between terminal OD1 of ECM and body ground.**

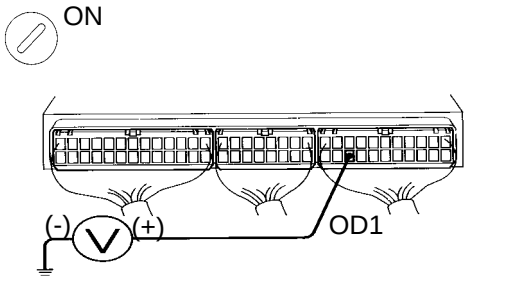

BE3840
Q08095

D00125

PREPARATION:
Turn the ignition switch ON.
CHECK:
Measure voltage between terminal OD1 of ECM and body ground.
OK:

Voltage: 9 - 14 V

OK	**Proceed to next circuit inspection shown on matrix chart (See page DI-276).**

NG

2	**Check voltage between terminal OD of cruise control ECU harness side connector and body ground.**

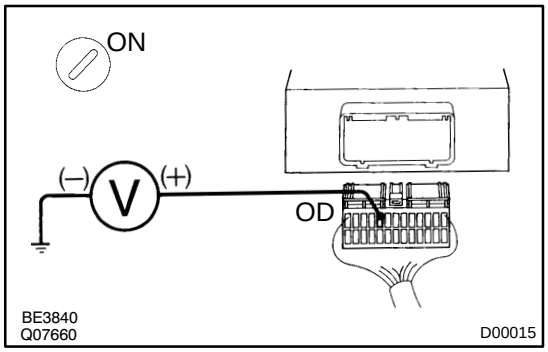

PREPARATION:

(a) Disconnect the cruise control ECU connector.

(b) Turn the ignition switch ON.

CHECK:

Measure voltage between terminal OD of cruise control ECU harness side connector and body ground.

OK:

Voltage: 9 - 14 V

OK → **Check and replace cruise control ECU.**

NG

3	**Check harness and connector between cruise control ECU and ECM. (See page IN-28).**

NG → **Repair or replace harness or connector.**

OK

Check and replace ECM.

DI52Y-01

O/D Main Switch & O/D OFF Indictor Light Circuit

CIRCUIT DESCRIPTION

The O/D main switch contacts go open when the switch is pushed in and go closed when it is pushed once again.
In O/D main switch at OFF position, the O/D OFF indicator light lights up, and the ECM prohibits shifting to O/D.

WIRING DIAGRAM

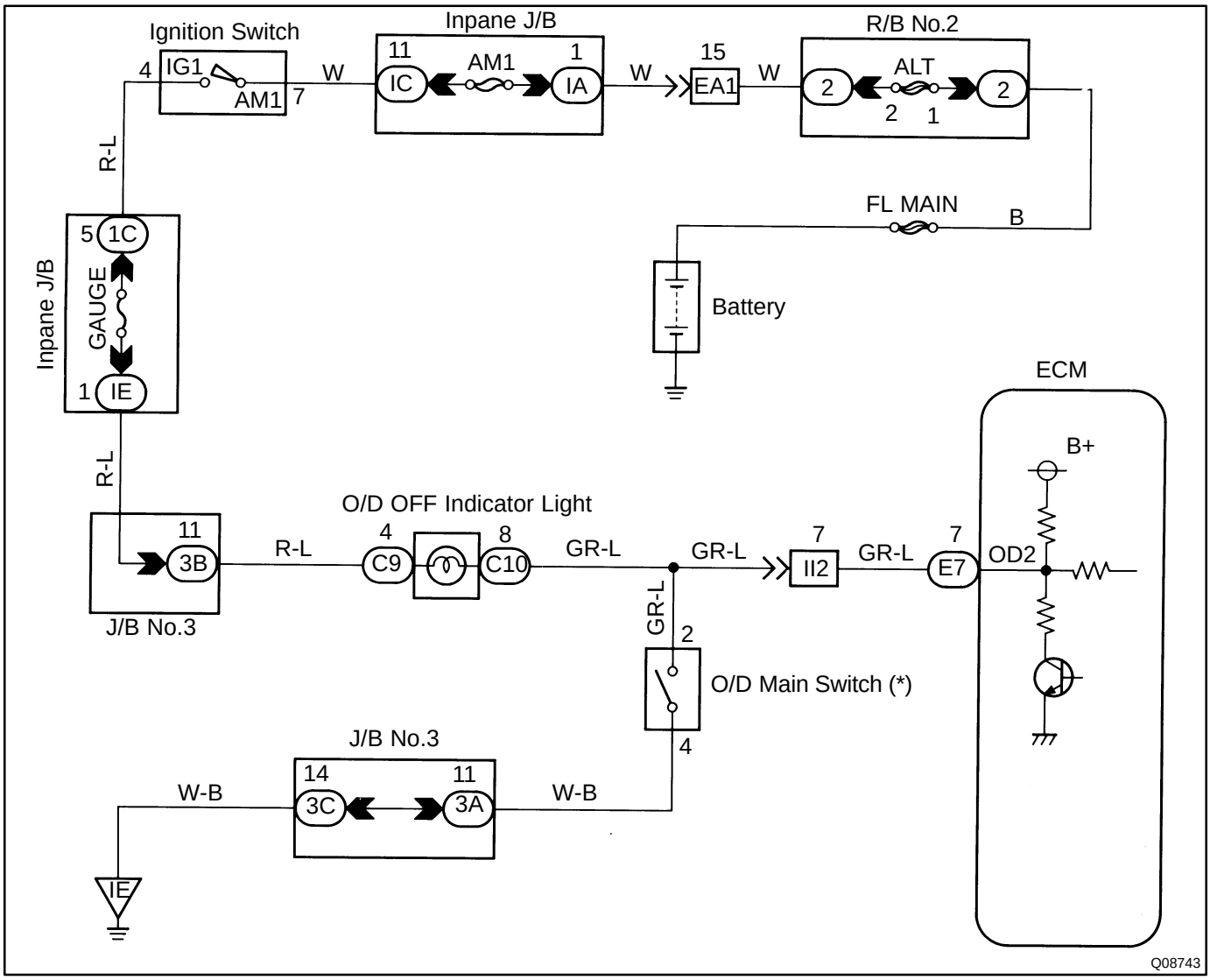

(*) O/D Main Switch
Contacts go open with switch pushed in.
Contacts go closed with switch pushed once again.

INSPECTION PROCEDURE
O/D OFF indicator light does not light up

1	**Check operation of O/D main switch.**

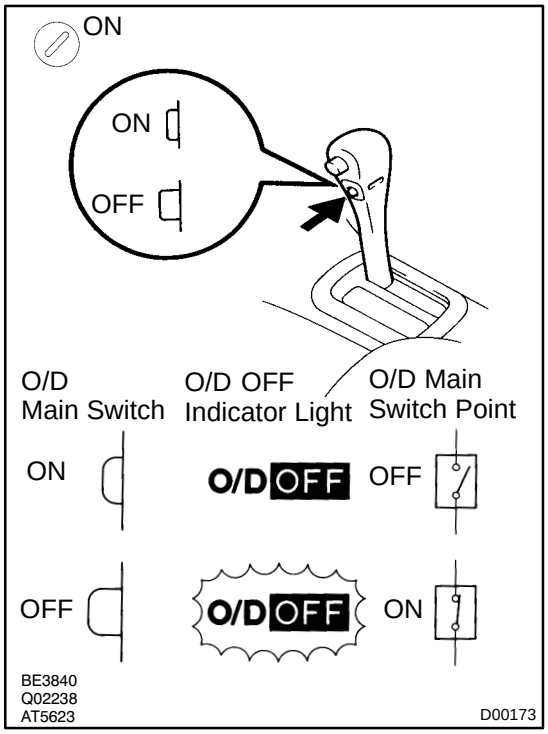

CHECK:

(a) Turn the ignition switch ON.

(b) Check "O/D OFF" indicator light when O/D main switch is pushed in to ON.

OK:

"O/D OFF" indicator light goes off.

CHECK:

Check "O/D OFF" indicator light when O/D main switch is pushed again to OFF.

OK:

"O/D OFF" indicator light lights up.

NG → **Go to step 4.**

OK

2	**Check OVRDRIVE CUT SW2 signal.**

When using TOYOTA hand-held tester:

PREPARATION:

(a) Connect the TOYOTA hand-held tester to the DLC3.

(b) Turn the ignition switch ON and TOYOTA hand-held tester main switch ON.

CHECK:

Read the OVRDRIVE CUT SW2 signal on TOYOTA hand-held tester.

OK:

O/D main switch pushed in:
OVERDRIVE CUT SW2...ON
O/D main switch pushed once again:
OVERDRIVE CUT SW2...OFF

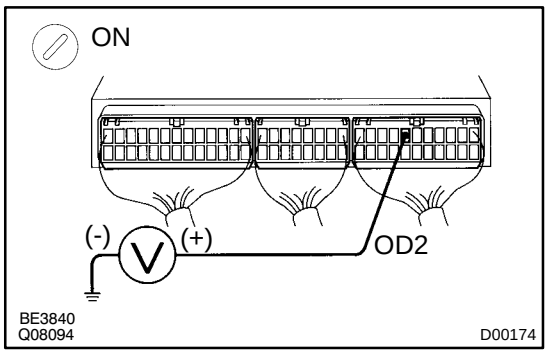

When not using TOYOTA hand-held tester:

PREPARATION:

Turn the ignition switch ON.

CHECK:

Check voltage between terminal OD2 of ECM and body ground.

OK:

O/D main switch	Voltage
OFF	Below 3 V
ON	9 - 14 V

OK → **Proceed to next circuit inspection shown on matrix chart (See page DI-233).**

NG

3	**Check harness and connector between O/D OFF indicator light and ECM (See page IN-28).**

NG → **Repair or replace harness or connector.**

OK

Check and replace ECM.

4	**Check O/D main switch.**

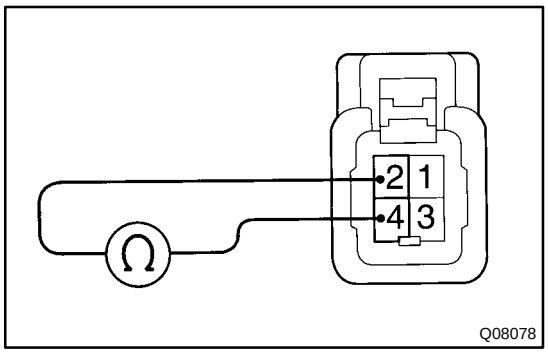

CHECK:

(a) Disconnect the O/D main switch connector.

(b) Check continuity between terminals 2 and 4 of O/D main switch connector.

OK:

O/D main switch	Specified condition
ON	No continuity
OFF	Continuity

NG → **Replace O/D main switch.**

OK

Check and replace the combination meter (See page BE-38).

O/D OFF indicator light remains ON

1	**Check O/D main switch.**

NG → **Replace O/D main switch.**

OK

2	**Check harness and connector between O/D OFF indicator light and O/D main switch, O/D OFF indicator light and ECM (See page IN-28).**

NG → **Repair or replace harness or connector.**

OK

Check and replace ECM.

DI53D-02

O/D Main Switch & O/D OFF Indictor Light Circuit

CIRCUIT DESCRIPTION

The O/D main switch contacts go open when the switch is pushed in and go closed when it is pushed once again. In O/D main switch OFF position, the O/D OFF indicator lights up, and the ECM prohibits shifting to O/D.

WIRING DIAGRAM

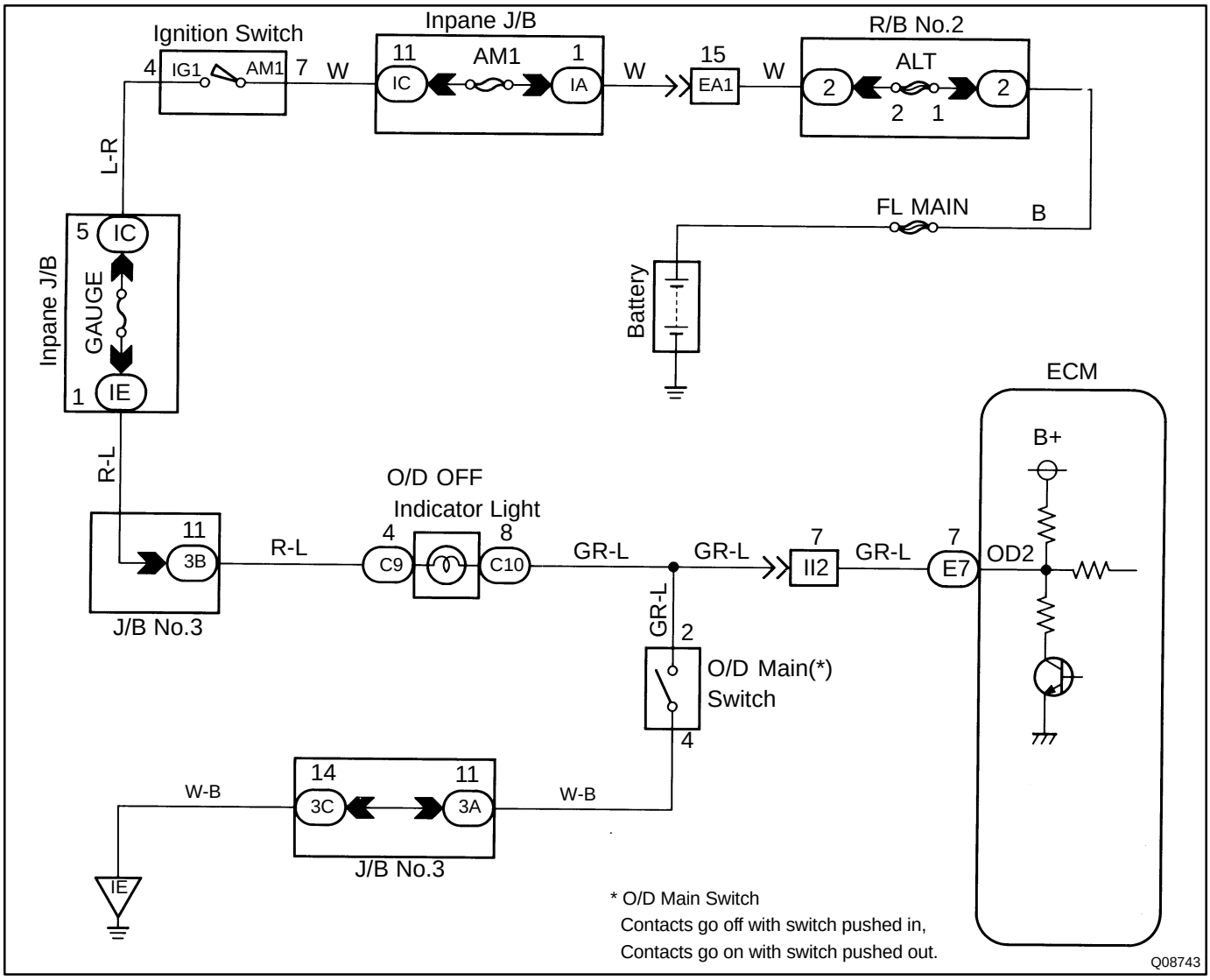

INSPECTION PROCEDURE
O/D OFF indicator light does not light up

1	**Check operation of O/D main switch.**

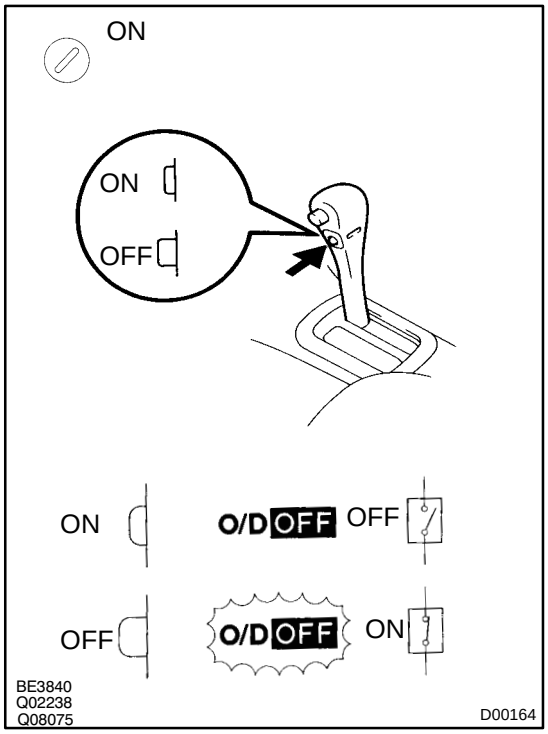

CHECK:

(a) Turn the ignition switch ON.

(b) Check the "O/D OFF" indicator light when O/D main switch is pushed to ON.

OK:

"O/D OFF" indicator light goes off.

CHECK:

Check "O/D OFF" indicator light when O/D main switch is pushed again to OFF.

OK:

"O/D OFF" indicator light lights up.

NG → **Go to step 4.**

OK

2	**Check OVRDRIVE CUT SW2 signal.**

When using TOYOTA hand-held tester:

PREPARATION:

(a) Connect the TOYOTA hand-held tester to the DLC3.

(b) Turn the ignition switch ON and TOYOTA hand-held tester main switch ON.

CHECK:

Read the OVRDRIVE CUT SW2 signal on the TOYOTA hand-held tester.

OK:

O/D main switch pushed in:
OVRDRIVE CUT SW2 ... ON
O/D main switch pushed once again:
OVRDRIVE CUT SW2 ... OFF

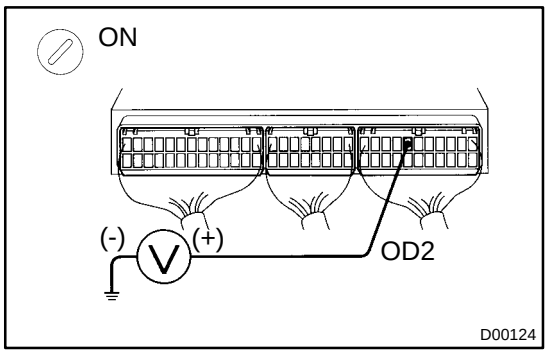

When not using TOYOTA hand-held tester:

PREPARATION:

Turn the ignition switch ON.

CHECK:

Check voltage between terminal OD2 of ECM and body ground.

OK:

O/D main switch	Voltage
OFF	Below 3 V
ON	9 - 14 V

OK → **Proceed to next circuit inspection shown on matrix chart (See page DI-276).**

NG

3	**Check harness and connector between O/D OFF indicator light and ECM (See page IN-28).**

NG → **Repair or replace harness or connector.**

OK

Check and replace ECM.

4	**Check O/D main switch.**

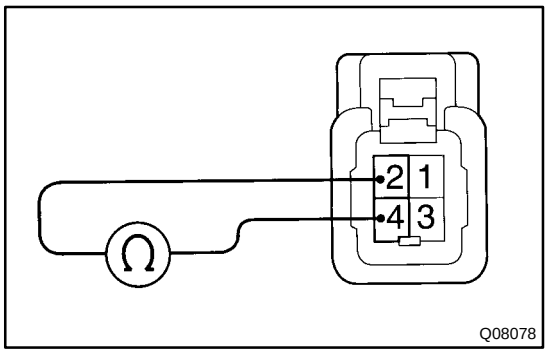

CHECK:

(a) Disconnect the O/D main switch connector.

(b) Measure resistance between terminal 2 and 4 of O/D main switch connector.

OK:

O/D main switch	Resistance
ON	∞ Ω (open)
OFF	0 Ω (Continuity)

NG → **Replace the O/D main switch.**

OK

Check and replace combination meter (See page BE-38).

O/D OFF indicator light remains ON

1	**Check O/D main switch.**

NG → **Replace O/D main switch.**

OK

2	**Check harness and connector between O/D OFF indicator light and O/D main switch, O/D OFF indicator light and ECM (See page IN-28).**

NG → **Repair or replace harness or connector.**

OK

Check and replace ECM.

DI51P-01

CIRCUIT INSPECTION

DTC	P0105	Manifold Absolute Pressure/Barometric Pressure Circuit Malfunction

CIRCUIT DESCRIPTION

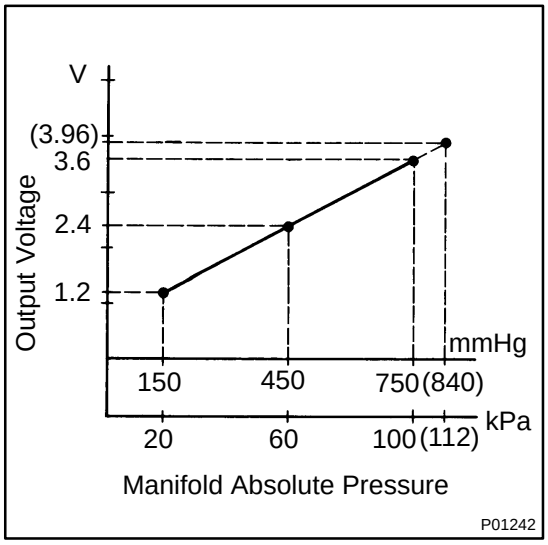

By a built-in sensor unit, the manifold absolute pressure sensor detects the intake manifold pressure as a voltage. The ECM then determines the basic injection duration and basic injection advance angle based on this voltage. Since the manifold absolute pressure sensor does not use the atmospheric pressure as a criterion, but senses the absolute pressure inside the intake manifold (the pressure in proportion to the present absolute vacuum 0), it is not influenced by fluctuations in the atmospheric pressure due to high altitude and other factors. This permits it to control the air-fuel ratio at the proper lever under all conditions.

DTC No.	DTC Detecting Condition	Trouble Area
P0105	Open or short in manifold absolute pressure sensor circuit	• Open or short in manifold absolute pressure sensor circuit • Manifold absolute pressure sensor • ECM

If the ECM detects DTC ” P105 ” it operates the fail safe function, keeping the ignition timing and injection volume constant and making it possible to drive the vehicle.

HINT:

After confirming DTC P0105 use the OBD II scan tool or TOYOTA hand-held tester to confirm the manifold absolute pressure from ”CURRENT DATA”.

Manifold Absolute Pressure (kPa)	Malfunction
0 kPa	• PIM circuit short
130 kPa or more	• VC circuit open or short • PIM circuit open • E2 circuit open

WIRING DIAGRAM

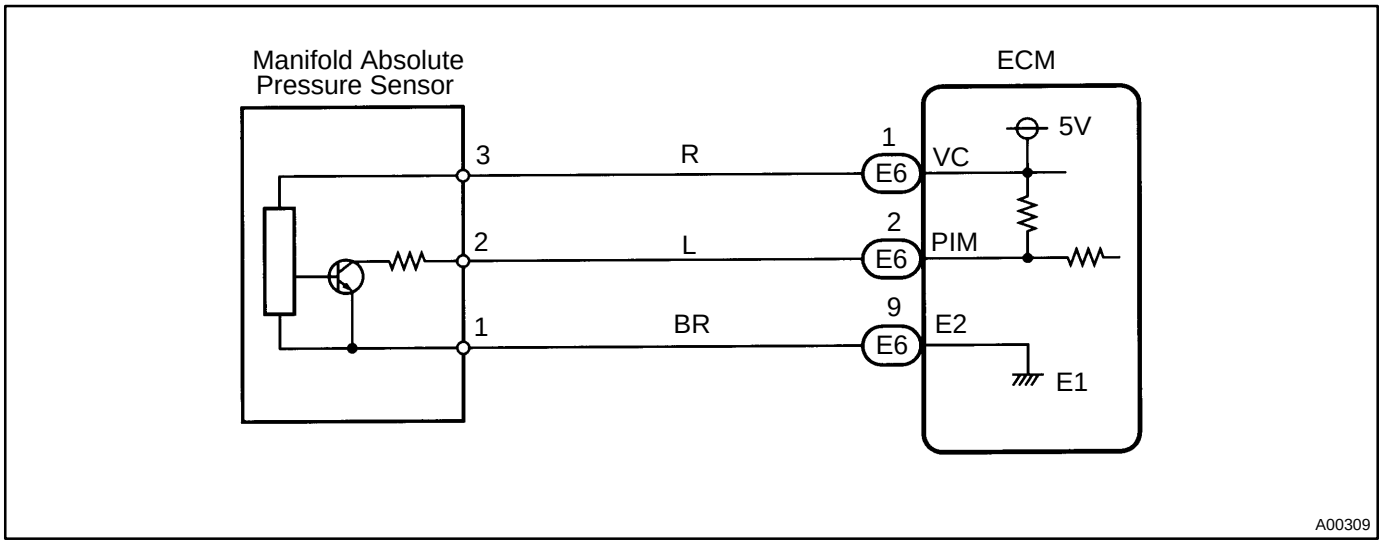

INSPECTION PROCEDURE

1	**Connect the OBD II scan tool or TOYOTA hand-held tester, and read value of manifold absolute pressure.**

PREPARATION:

(a) Connect the OBD II scan tool or TOYOTA hand-held tester to the DLC3.

(b) Turn ignition switch ON and OBD II scan tool or TOYOTA hand-held tester main switch ON.

CHECK:

Read value of manifold absolute pressure on the OBD II scan tool or TOYOTA hand-held tester.

OK:

Same as atmospheric pressure.

OK → **Check for intermittent problems (See page DI-1 10).**

NG

2	Check voltage between terminals VC and E2 of ECM connector.

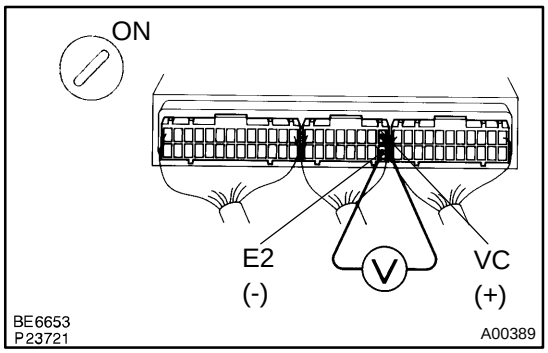

PREPARATION:
(a) Turn up the floor mat on the passenger side.
(b) Turn ignition switch ON.

CHECK:
Measure voltage between terminals VC and E2 of ECM connector.

OK:
Voltage: 4.5 - 5.5 V

NG → **Check and replace ECM (See page IN-28).**

OK

3	Check voltage between terminals PIM and E2 of ECM connector.

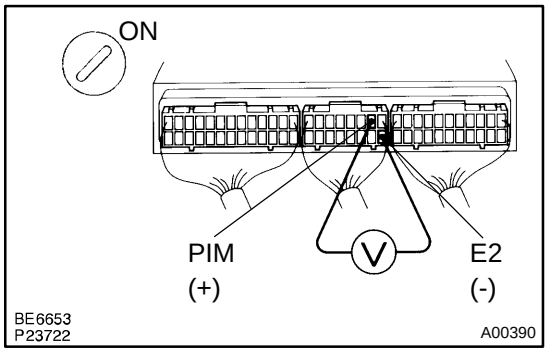

PREPARATION:
(a) Turn up the floor mat on the passenger side.
(b) Turn ignition switch ON.

CHECK:
Measure voltage between terminals PIM and E2 of ECM connector.

OK:
Voltage: 3.3 - 3.9 V

OK → **Check and replace ECM (See page IN-28).**

NG

4	**Check for open and short in harness and connector between manifold absolute pressure sensor and ECM (See page IN-28).**

NG → **Repair and replace harness or connector.**

OK

Replace manifold absolute pressure sensor.

DI50M-01

CIRCUIT INSPECTION

DTC	P0105	Manifold Absolute Pressure/Barometric Pressure Circuit Malfunction

CIRCUIT DESCRIPTION

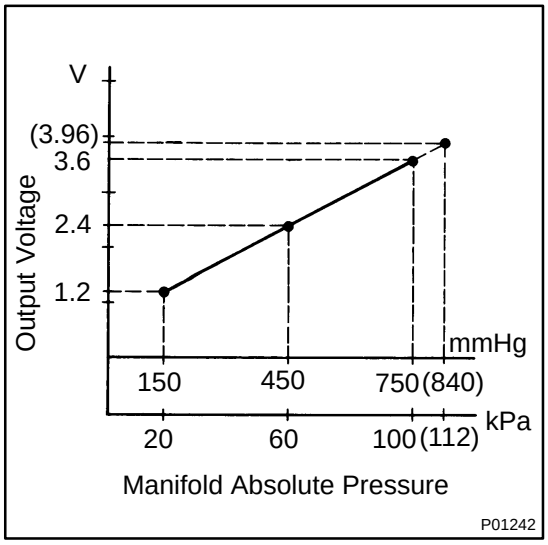

By a built-in sensor unit, the manifold absolute pressure sensor detects the intake manifold pressure as a voltage. The ECM then determines the basic injection duration and basic injection advance angle based on this voltage. Since the manifold absolute pressure sensor does not use the atmospheric pressure as a criterion, but senses the absolute pressure inside the intake manifold (the pressure in proportion to the present absolute vacuum 0), it is not influenced by fluctuations in the atmospheric pressure due to high altitude and other factors. This permits it to control the air-fuel ratio at the proper lever under all conditions.

DTC No.	DTC Detecting Condition	Trouble Area
P0105	Open or short in manifold absolute pressure sensor circuit	• Open or short in manifold absolute pressure sensor circuit • Manifold absolute pressure sensor • ECM

If the ECM detects DTC ”P0105” it operates the fail safe function, keeping the ignition timing and injection volume constant and making it possible to drive the vehicle.

HINT:

After confirming DTC P0105, use the OBD II scan tool or TOYOTA hand-held tester to confirm the manifold absolute pressure from ”CURRENT DATA”.

Manifold Absolute Pressure (kPa)	Malfunction
0 kPa	• PIM circuit short
130 or more	• VC circuit open or short • PIM circuit open • E2 circuit open

WIRING DIAGRAM

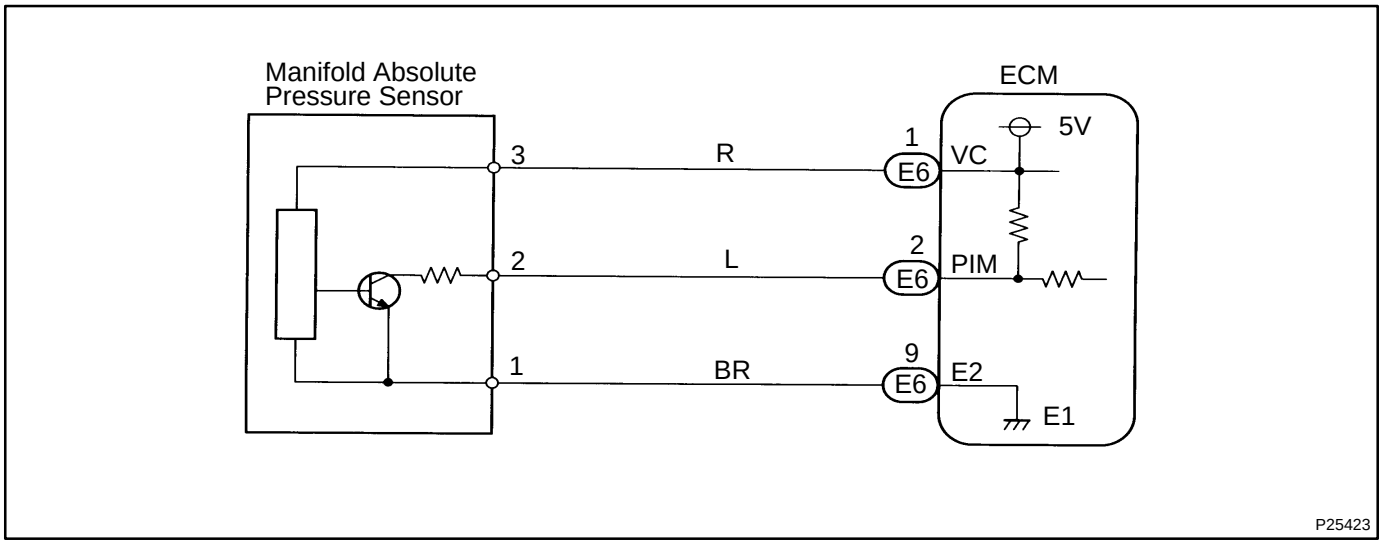

INSPECTION PROCEDURE

HINT:

If DTC ”P0105” (Manifold Absolute Pressure/Barometric Pressure Circuit Malfunction), ”P0106” (Manifold Absolute Pressure /Barometric Pressure Circuit Range/Performance Problem), ”P0110” (Intake Air Temp. Circuit Malfunction), ”P0115” (Engine Coolant Temp. Circuit Malfunction), ”P0120” (Throttle/Pedal Position Sensor/Switch ”A” Circuit Malfunction) are output simultaneously, E2 (sensor ground) may be open.

1	**Connect the OBD II scan tool or TOYOTA hand-held tester, and read value of manifold absolute pressure.**

PREPARATION:

(a) Connect the OBD II scan tool or TOYOTA hand-held tester to the DLC3.

(b) Turn ignition switch ON and OBD II scan tool or TOYOTA hand-held tester main switch ON.

CHECK:

Read value of manifold absolute pressure on the OBD II scan tool or TOYOTA hand-held tester.

OK:

Same as atmospheric pressure.

OK → **Check for intermittent problems (See page DI-3).**

NG

2	Check voltage between terminals VC and E2 of ECM connector.

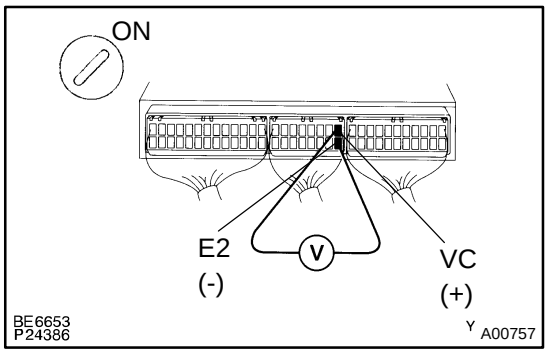

PREPARATION:

(a) Turn up the floor mat on the passenger side.

(b) Turn ignition switch ON.

CHECK:

Measure voltage between terminals VC and E2 of ECM connector.

OK:

Voltage: 4.5 - 5.5 V

NG → **Check and replace ECM (See page IN-28).**

OK

3	Check voltage between terminals PIM and E2 of ECM connector.

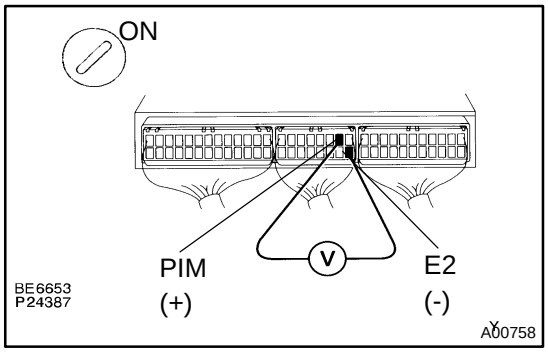

PREPARATION:

(a) Turn up the floor mat on the passenger side.

(b) Turn ignition switch ON.

CHECK:

Measure voltage between terminals PIM and E2 of ECM connector.

OK:

Voltage: 3.3 - 3.9 V

OK → **Check and replace ECM (See page IN-28).**

NG

4	**Check for open and short in harness and connector between manifold absolute pressure sensor and ECM.**

NG → **Repair and replace harness or connector.**

OK

Replace manifold absolute pressure sensor (See page SF-48).

DI51Q-01

DTC	P0106	Manifold Absolute Pressure/Barometric Presser Circuit Range/Performance Problem

CIRCUIT DESCRIPTION

Refer to Manifold Absolute Pressure/Barometric Pressure Circuit Malfunction on page DI-128 .

DTC No.	DTC Detecting Condition	Trouble Area
P0106	After the engine is warmed up, conditions (a) and (b) continue with engine speed 400 - 1,000 rpm (2 trip detection logic) (a) Throttle valve fully closed (b) Manifold absolute pressure sensor output > 3.0 V	• Manifold absolute pressure sensor
	Condition (a) and (b) continue with engine speed 2,500 rpm or less (2 trip detection logic) (c) VTA > 1.82 V (d) Manifold absolute pressure sensor output < 1.0 V	

WIRING DIAGRAM

Refer to Manifold Absolute Pressure/Barometric Pressure Circuit Malfunction on page DI-128 .

INSPECTION PROCEDURE

HINT:

If DTC ”P0105” (Manifold Absolute Pressure/Barometric Pressure Circuit Malfunction) and ”P0106” (Manifold Absolute Pressure /Barometric Pressure Circuit Range/Performance Problem) are output simultaneously, manifold absolute pressure sensor circuit may be open. Perform troubleshooting of DTC P0105 first.

1	Are there any other codes (besides DTC P0106) being output?

YES → Go to relevant DTC chart.

NO →

Replace manifold absolute pressure sensor.

DI50N-01

DTC	P0106	Manifold Absolute Pressure Circuit Range/ Performance Problem

CIRCUIT DESCRIPTION

Refer to Manifold Absolute Pressure/Barometric Pressure Circuit Malfunction on page DI-21 .

DTC No.	DTC Detecting Condition	Trouble Area
P0106	Conditions (a), (b) and (c) continue for over 10 seconds: (a) V PIM > 3.3 V (b) Throttle position is closed (c) 400 rpm ≦ NE < 1,000 rpm (2 trip detection logic)	• Manifold absolute pressure sensor
	Conditions (a), (b) and (c) continue for over 5 seconds: (a) V PIM > 1.0 V (b) NE < 2,500 rpm (c) VTA > 1.82 V	

WIRING DIAGRAM

Refer to page DI-21 for the WIRING DIAGRAM.

INSPECTION PROCEDURE

HINT:

- If DTC ”P0105” (Manifold Absolute Pressure/Barometric Pressure Circuit Malfunction), ”P0106” (Manifold Absolute Pressure/Barometric Pressure Circuit Range/Performance Problem), ”P0110” (Intake Air Temp. Circuit Malfunction), ”P0115” (Engine Coolant Temp. Circuit Malfunction), ”P0120” (Throttle/ Pedal Position Sensor/Switch ”A” Circuit Malfunction) are output simultaneously, E2 (sensor ground) may be open.
- If DTC ”P0105” (Manifold Absolute Pressure/Barometric Pressure Circuit Malfunction)and ”P0106” (Manifold Absolute Pressure/Barometric Pressure Circuit Range/Performance Problem) are output simultaneously, manifold absolute pressure sensor circuit may be open.
  Perform troubleshooting of DTC P0105 first.

1	**Are there any other codes (besides DTC P0106) being output?**

YES → **Go to relevant DTC chart.**

NO

Replace manifold absolute pressure sensor.

DI51R-01

DTC	P0110	Intake Air Temp. Circuit Malfunction

CIRCUIT DESCRIPTION

(fig.1)

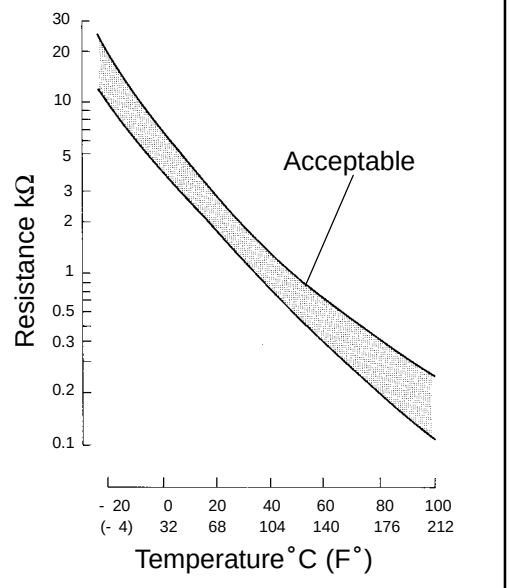

The intake air temp. sensor is built into the air cleaner cap and sensors the intake air temperature.

A thermistor built in the sensor changes the resistance value according to the intake air temperature. The lower the intake air temperature the greater the thermistor resistance value, and the higher the intake air temperature the lower the thermistor resistance value (See fig.1).

The air intake temperature sensor is connected to the ECM (See below). The 5 V power source voltage in the ECM is applied to the intake air temperature sensor from the terminal THA via a resistor R.

That is, the resistor R and the intake air temperature sensor are connected in series. When the resistance value of the intake air temperature sensor changes in accordance with changes in the intake air temperature the potential at terminal THA also changes. Based on this signal, the ECM increases the fuel injection volume to improve driveability during cold engine operation.

If the ECM detects the DTC ”P0110”, it operates the fail safe function in which the intake air temperature is assumed to be 20˚C (68˚F).

Reference

Intake Air Temp. ˚C (˚F)	Resistance (kΩ)	Voltage (V)
- 20 (- 4)	16.2	4.3
0 (32)	5.9	3.4
20 (68)	2.5	2.4
40 (104)	1.1	1.4
60 (140)	0.6	0.9
80 (176)	0.3	0.5
100 (212)	0.2	0.3

DTC No.	DTC Detecting Condition	Trouble Area
P0110	Open or short in intake air temp. sensor circuit	• Open or short in intake air temp. sensor circuit • Intake air temp. sensor • ECM

HINT:

After confirming DTC P110 use the OBD II scan tool or TOYOTA hand-held tester to confirm the intake air temperature from ”CURRENT DATA”.

Temp. Displayed	Malfunction
- 40˚C (- 40˚F)	Open circuit
140˚C (284˚F) or more	Short circuit

WIRING DIAGRAM

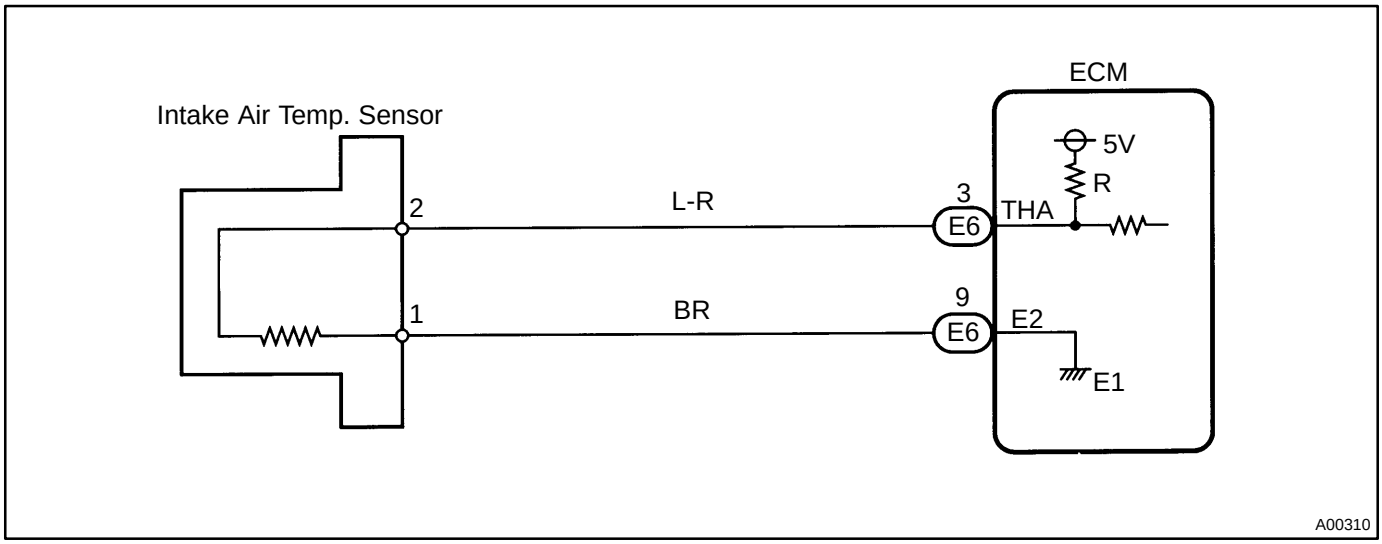

INSPECTION PROCEDURE

HINT:

If DTC "P0105" (Manifold Absolute Pressure/Barometric Pressure Circuit Malfunction), "P0106" (Manifold Absolute Pressure /Barometric Pressure Circuit Range/Performance Problem), "P0110" (Intake Air Temp. Circuit Malfunction), "P0115" (Engine Coolant Temp. Circuit Malfunction), "P0120" (Throttle/Pedal Position Sensor/Switch "A" Circuit Malfunction) are output simultaneously, E2 (sensor ground) may be open.

1	**Connect the OBD II scan tool or TOYOTA hand-held tester, and read value of intake air temperature.**

PREPARATION:

(a) Connect the OBD II scan tool or TOYOTA hand-held tester to DLC3.

(b) Turn ignition switch ON and OBD II scan tool or TOYOTA hand-held tester main switch ON.

CHECK:

Read temperature value on the OBD II scan tool or TOYOTA hand-held tester.

OK:

Same as actual intake air temperature.

HINT:

- If there is open circuit, OBD II scan tool or TOYOTA hand-held tester indicates - 40˚C (- 40˚F).
- If there is short circuit, OBD II scan tool or TOYOTA hand−held tester indicates 140˚C (284˚F) or more.

NG → **- 40˚C (- 40˚F) ....Go to step 2.**
140˚C (284˚F) or more ....Go to step 4.

OK

Check for intermittent problems
(See page DI-110).

2	Check for open in harness or ECM.

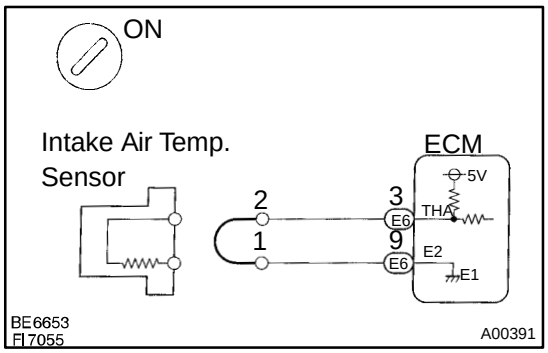

PREPARATION:

(a) Disconnect the intake air temp. sensor connector.
(b) Connect sensor wire harness terminals together.
(c) Turn ignition switch ON.

CHECK:

Read temperature value on the OBD II scan tool or TOYOTA hand-held tester.

OK:

Temperature value: 140˚C (284˚F) or more

OK	Confirm good connection at sensor. If OK, replace intake air temp. sensor.

NG

3	Check for open in harness or ECM.

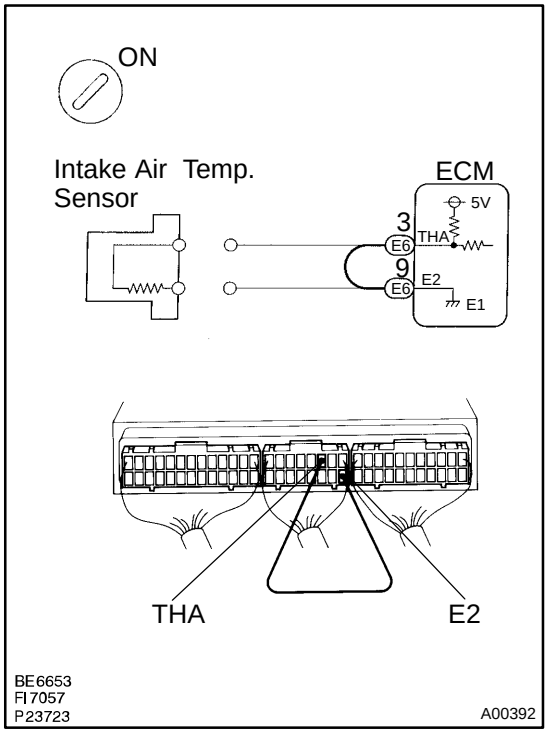

PREPARATION:

(a) Turn up the floor mat on the passenger side.
(b) Connect between terminals THA and E2 of ECM connector.

HINT:

Intake air temp. sensor connector is disconnected.

Before checking, do a visual and contact pressure check for the ECM connector (See page IN-28).

(c) Turn ignition switch ON.

CHECK:

Read temperature value on the OBD II scan tool or TOYOTA hand-held tester.

OK:

Temperature value: 140˚C (284˚F) or more

OK	Open in harness between terminals E2 or THA, repair or replace harness.

NG

Confirm good connection at ECM. If OK, replace ECM.

4	Check for short in harness and ECM.

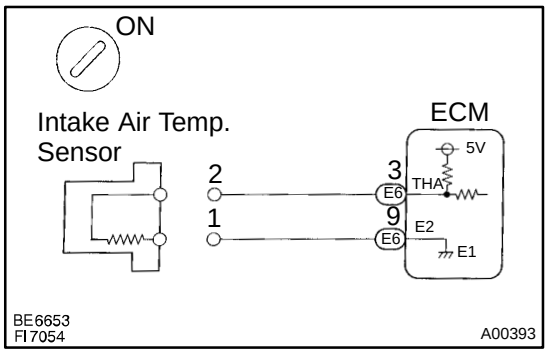

PREPARATION:

(a) Disconnect the intake air temp. sensor connector.

(b) Turn ignition switch ON.

CHECK:

Read temperature value on the OBD II scan tool or TOYOTA hand-held tester.

OK:

Temperature value: - 40˚C (- 40˚F)

OK	Replace intake air temp. sensor.

NG

5	Check for short in harness or ECM.

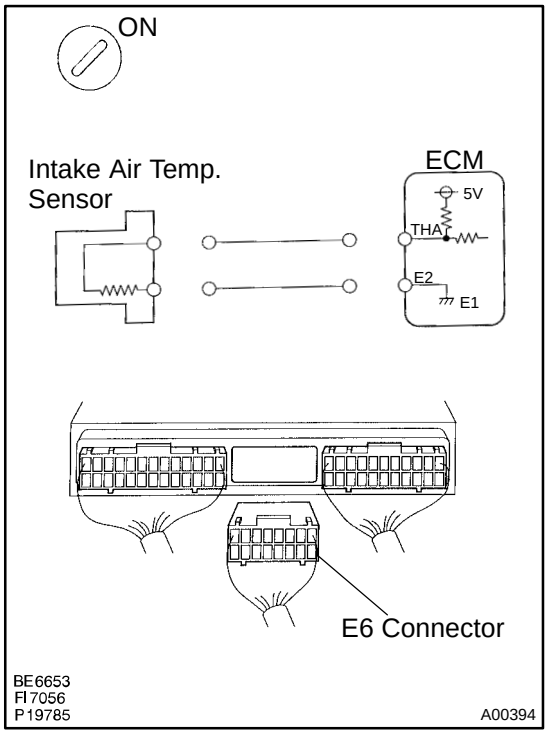

PREPARATION:

(a) Turn up the floor mat on the passenger side.

(b) Disconnect the ”E6” connector of ECM.

HINT:

Intake air temp. sensor connector is disconnected.

(c) Turn ignition switch ON.

CHECK:

Read temperature value on the OBD II scan tool or TOYOTA hand-held tester.

OK:

Temperature value: - 40˚C (- 40˚F)

OK	Repair or replace harness or connector.

NG

Check and replace ECM (See page IN-28).

DI50O-01

DTC	P0110	Intake Air Temp. Circuit Malfunction

CIRCUIT DESCRIPTION

(fig.1)

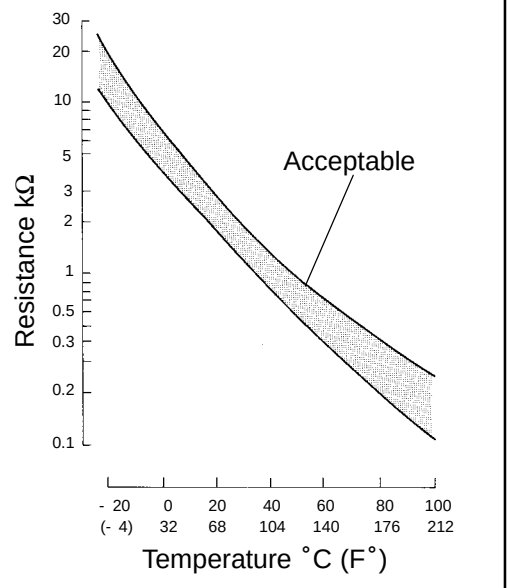

The intake air temp. sensor is built into the air cleaner cap and sensors the intake air temperature.

A thermistor built in the sensor changes the resistance value according to the intake air temperature. The lower the intake air temperature, the greater the thermistor resistance value, and the higher the intake air temperature, the lower the thermistor resistance value (See fig.1).

The air intake temperature sensor is connected to the ECM. The 5V power source voltage in the ECM is applied to the intake temperature sensor from the terminal THA via a resistor R.

That is, the resistor R and the intake air temperature sensor are connected in series. When the resistance value of the intake air temp. sensor changes in accordance with changes in the intake air temperature, the potential at terminal THA also changes. Based on this signal, the ECM increases the fuel injection volume to improve driveability during cold engine operation.

If the ECM detects the DTC ”P0110”, it operates the fail safe function in which the intake air temperature is assumed to be 20˚C (68˚F).

Reference

Intake Air Temp. ˚C (˚F)	Resistance (kΩ)	Voltage (V)
-20 (-4)	16.2	4.3
0 (32)	5.9	3.4
20 (68)	2.5	2.4
40 (104)	1.1	1.4
60 (140)	0.6	0.9
80 (176)	0.3	0.5
100 (212)	0.2	0.3

DTC No.	DTC Detecting Condition	Trouble Area
P0110	Open or short in intake air temp. sensor circuit	• Open or short in intake air temp. sensor circuit • Intake air temp. sensor • ECM

HINT:

After confirming DTC P0110 use the OBD II scan tool or TOYOTA hand-held tester to confirm the intake air temperature from ”CURRENT DATA”.

Temperature Displayed	Malfunction
- 40˚C (- 40˚F)	Open circuit
140˚C (284˚F) or more	Short circuit

WIRING DIAGRAM

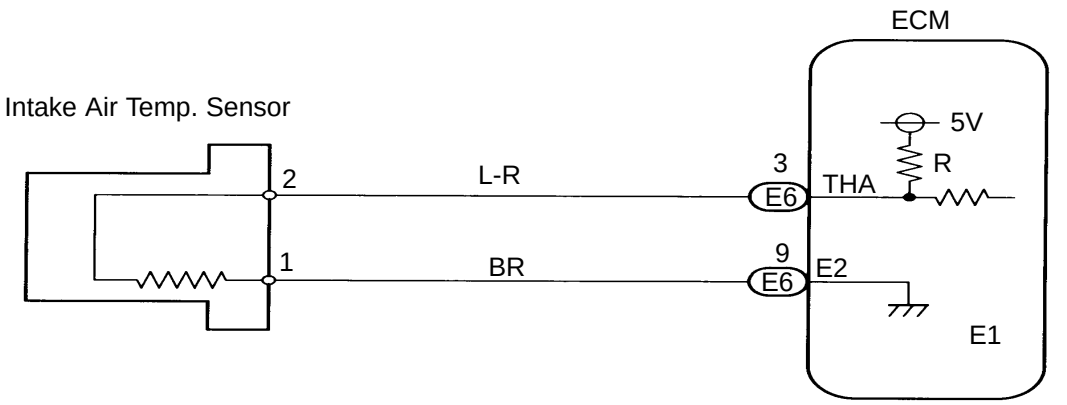

INSPECTION PROCEDURE

HINT:

If DTC "P0105" (Manifold Absolute Pressure/Barometric Pressure Circuit Malfunction), "P0106" (Manifold Absolute Pressure/Barometric Pressure Circuit Range/Performance Problem), "P0110" (Intake Air Temp. Circuit Malfunction), "P0115" (Engine Coolant Temp. Circuit Malfunction), "P0120" (Throttle/Pedal Position Sensor/Switch "A" Circuit Malfunction) are output simultaneously, E2 (sensor ground) may be open.

1	**Connect the OBD II scan tool or TOYOTA hand-held tester, and read value of intake air temp.**

PREPARATION:

(a) Connect the OBD II scan tool or TOYOTA hand-held tester to DLC3.

(b) Turn ignition switch ON and push OBD II scan tool or TOYOTA hand-held tester main switch ON.

CHECK:

Read temperature value on the OBD II scan tool or TOYOTA hand-held tester.

OK:

Same as actual intake air temperature.

HINT:

- If there is open circuit, OBD II scan tool or TOYOTA hand-held tester indicates - 40˚C (- 40˚F).
- If there is short circuit, OBD II scan tool or TOYOTA hand−held tester indicates 140˚C (284˚F) or more.

NG → **- 40˚C (- 40˚F) ... Go to step 2.**
140˚C (284˚F) or more ... Go to step 4.

OK

Check for intermittent problems
(See page DI-3).

2	Check for open in harness or ECM.

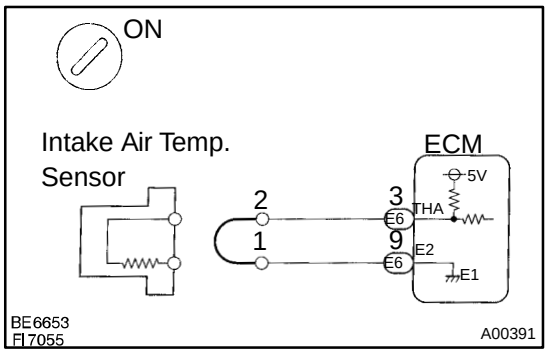

PREPARATION:

(a) Disconnect the intake temp. sensor connector.
(b) Connect sensor wire harness terminals together.
(c) Turn ignition switch ON.

CHECK:

Read temperature value on the OBD II scan tool or TOYOTA hand-held tester.

OK:

Temperature value: 140˚C (284˚F) or more

OK	Confirm good connection at sensor. If OK, replace intake air temp. sensor (See page SF-48).

NG

3	Check for open in harness or ECM.

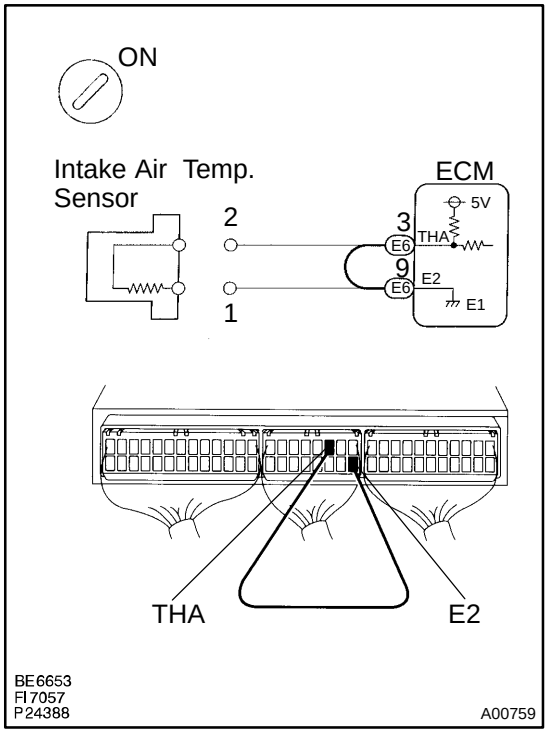

PREPARATION:

(a) Turn up the floor mat on the passenger side.
(b) Connect between terminals THA and E2 of ECM connector.

HINT:

Intake air temp. sensor connector is disconnected.

Before checking, do a visual and contact pressure check for the ECM connector (See page IN-28).

(c) Turn ignition switch ON.

CHECK:

Read temperature value on the OBD II scan tool or TOYOTA hand-held tester.

OK:

Temp. value: 140˚C (284˚F) or more

OK	Open in harness between terminals E2 or THA, repair or replace harness.

NG

Confirm good connection at ECM. If OK, replace ECM.

4	Check for short in harness and ECM.

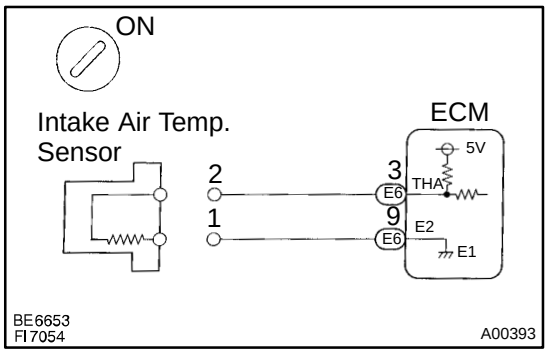

PREPARATION:

(a) Disconnect the intake air temp. sensor connector.

(b) Turn ignition switch ON.

CHECK:

Read temperature. value on the OBD II scan tool or TOYOTA hand-held tester.

OK:

Temperature value: - 40˚C (- 40˚F)

OK	Replace intake air temp. sensor (See page SF-48).

NG

5	Check for short in harness or ECM.

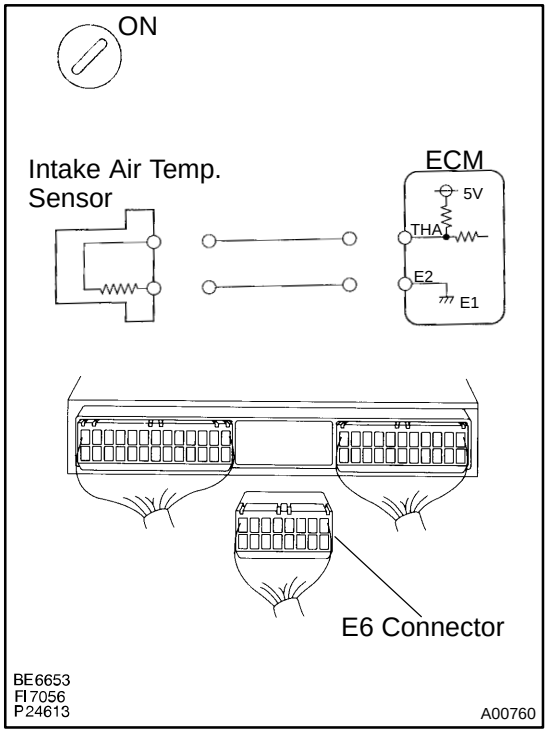

PREPARATION:

(a) Turn up the floor mat on the passenger side

(b) Disconnect the ”E6” connector of ECM.

HINT:

Intake air temp. sensor connector is disconnected.

(c) Turn ignition switch ON.

CHECK:

Read temperature value on the OBD II scan tool or TOYOTA hand-held tester.

OK:

Temperature value: - 40˚C (- 40˚F)

OK	Repair or replace harness or connector.

NG

Check and replace ECM (See page IN-28).

DI51S-01

DTC	P0115	Engine Coolant Temp. Circuit Malfunction

CIRCUIT DESCRIPTION

A thermistor built into the engine coolant temperature sensor changes the resistance value according to the engine coolant temperature.

The structure of the sensor and connection to the ECM is the same as in the intake air temp. circuit malfunction shown on page DI-133 .

If the ECM detects the DTC P0115, it operates the fail safe function in which the engine coolant temp. is assumed to be 80˚C (176 ˚F).

DTC No.	Detection Item	Trouble Area
P0115	Open or short in engine coolant temp. sensor circuit	• Open or short in engine coolant temp. sensor circuit • Engine coolant temp. sensor • ECM

HINT:

After confirming DTC P0115 use the OBD II scan tool or TOYOTA hand-held tester to confirm the engine coolant temperature from ”CURRENT DATA”.

Temp. Displayed	Malfunction
- 40˚C (- 40˚F)	Open circuit
140˚C (284˚F) or more	Short circuit

WIRING DIAGRAM

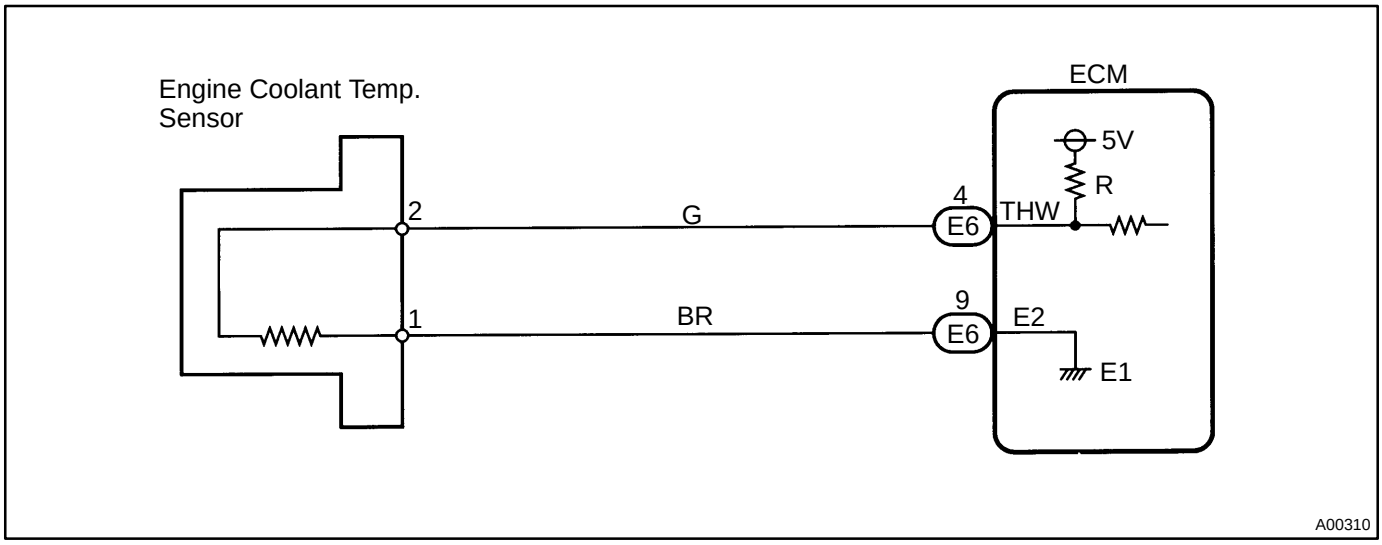

INSPECTION PROCEDURE

HINT:

If DTC ”P0105” (Manifold Absolute Pressure/Barometric Pressure Circuit Malfunction), ”P0106” (Manifold Absolute Pressure /Barometric Pressure Circuit Range/Performance Problem), ”P0110” (Intake Air Temp. Circuit Malfunction), ”P0115” (Engine Coolant Temp. Circuit Malfunction), ”P0120” (Throttle/Pedal Position Sensor/Switch ”A” Circuit Malfunction) are output simultaneously, E2 (sensor ground) may be open.

1	**Connect the OBD II scan tool or TOYOTA hand-held tester, and read value of engine coolant temperature.**

PREPARATION:

(a) Connect the OBD II scan tool or TOYOTA hand-held tester to the DLC3.

(b) Turn ignition switch ON and push the OBD II scan tool or TOYOTA hand-held tester main switch ON.

CHECK:

Read temperature value on the OBD II scan tool or TOYOTA hand-held tester.

OK:

Same as actual engine coolant temperature.

HINT:

- If there is open circuit, OBD II scan tool or TOYOTA hand-held tester indicates - 40˚C (- 40˚F).
- If there is short circuit, OBD II scan tool or TOYOTA hand−held tester indicates 140˚C (284˚F) or more.

NG → **- 40˚C (- 40˚F) ... Go to step 2.**
140˚C (284˚F) or more ... Go to step 4.

OK

Check for intermittent problems (See page DI-110).

2	**Check for open in harness or ECM.**

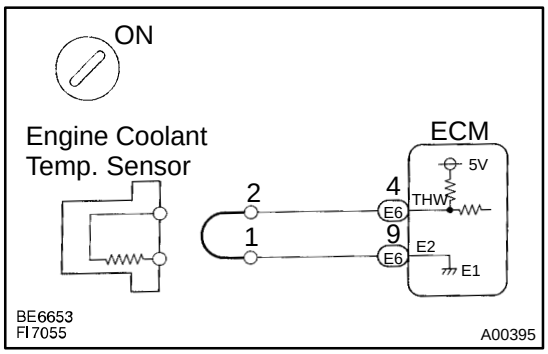

PREPARATION:

(a) Disconnect the engine coolant temp. sensor connector.

(b) Connect sensor wire harness terminals together.

(c) Turn ignition switch ON.

CHECK:

Read temperature value on the OBD II scan tool or TOYOTA hand-held tester.

OK:

Temperature value: 140˚C (284˚F) or more

OK → **Confirm good connection at sensor. If OK, replace engine coolant temp. sensor.**

NG

3	Check for open in harness or ECM.

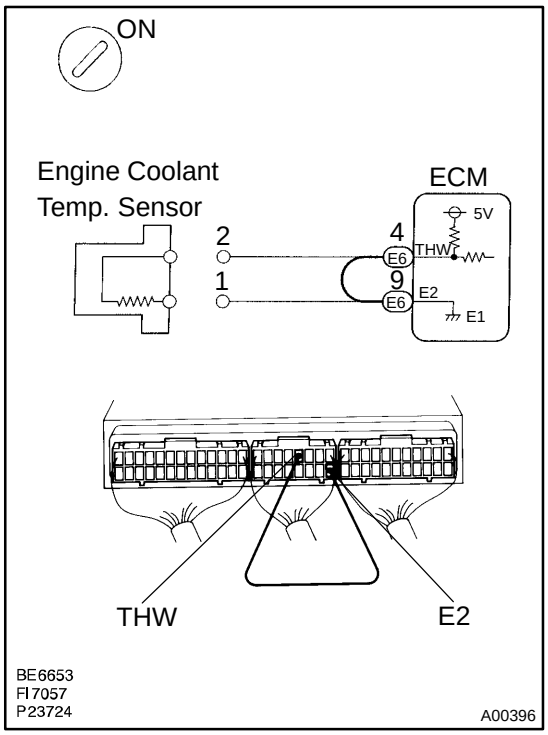

PREPARATION:

(a) Turn up the floor mat on the passenger side.

(b) Connect between terminals THW and E2 of ECM connector.

HINT:

Engine coolant temp. sensor connector is disconnected. Before checking, do a visual and contact pressure check for the ECM connector (See page IN-28).

(c) Turn ignition switch ON.

CHECK:

Read temperature value on the OBD II scan tool or TOYOTA hand-held tester.

OK:

Temperature value: 140˚C (284˚F) or more

OK	Open in harness between terminals E2 or THW, repair or replace harness.

NG

Confirm good connection at ECM. If OK, replace ECM.

4	Check for short in harness and ECM.

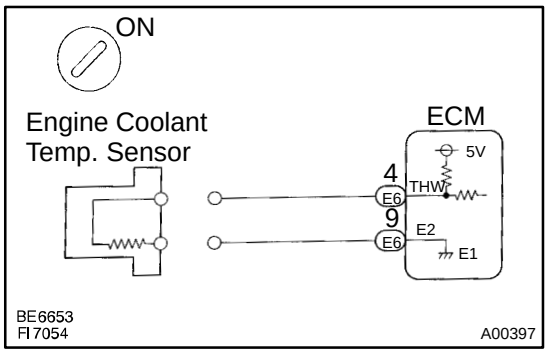

PREPARATION:

(a) Disconnect the engine coolant temp. sensor connector.

(b) Turn ignition switch ON.

CHECK:

Read temperature value on the OBD II scan tool or TOYOTA hand-held tester.

OK:

Temperature value: - 40˚C (- 40˚F)

OK	Replace engine coolant temp. sensor.

NG

5	Check for short in harness or ECM.

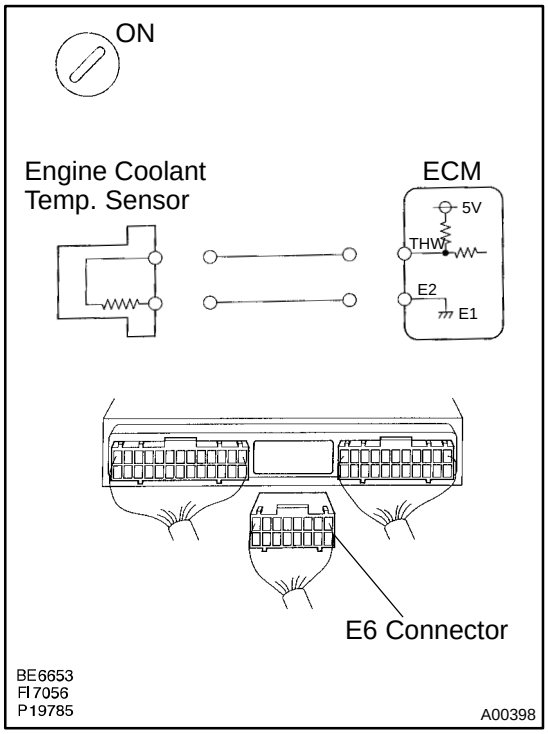

PREPARATION:

(a) Turn up the floor mat on the passenger side.

(b) Disconnect the ”E6” connector of ECM.

HINT:

Engine coolant temp. sensor connector is disconnected.

(c) Turn ignition switch ON.

CHECK:

Read temperature value on the OBD II scan tool or TOYOTA hand-held tester.

OK:

Temperature value: - 40˚C (- 40˚F)

OK	Repair or replace harness or connector.

NG

Check and replace ECM (See page IN-28).

DI50P-01

DTC	P0115	Engine Coolant Temp. Circuit Malfunction

CIRCUIT DESCRIPTION

A thermistor built into the engine coolant temperature sensor changes the resistance value according to the engine coolant temperature.
The structure of the sensor and connection to the ECM is the same as in the intake air temp. circuit malfunction shown on page DI-26 .
If the ECM detects the DTC P0115, it operates the fail safe function in which the engine coolant temp. is assumed to be 80˚C (176 ˚F).

DTC No.	Detection Item	Trouble Area
P0115	Open or short in engine coolant temp. sensor circuit	• Open or short in engine coolant temp. sensor circuit • Engine coolant temp. sensor • ECM

HINT:
After confirming DTC P0115 use the OBD II scan tool or TOYOTA hand-held tester to confirm the engine coolant temperature from ”CURRENT DATA”.

Temp. Displayed	Malfunction
- 40˚C (- 40˚F)	Open circuit
140˚C (284˚F) or more	Short circuit

WIRING DIAGRAM

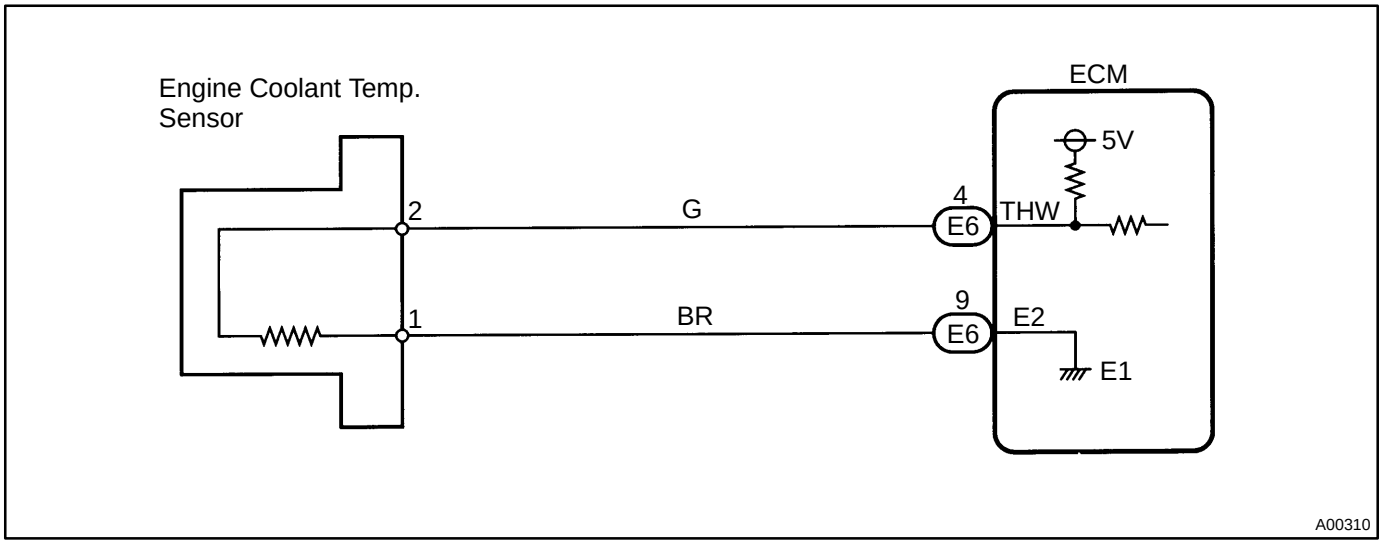

INSPECTION PROCEDURE

HINT:
If DTC ”P0105” (Manifold Absolute Pressure/Barometric Pressure Circuit Malfunction), ”P0106” (Manifold Absolute Pressure/Barometric Pressure Circuit Range/Performance Problem), ”P0110” (Intake Air Temp. Circuit Malfunction), ”P0115” (Engine Coolant Temp. Circuit Malfunction), ”P0120” (Throttle/Pedal Position Sensor/Switch ”A” Circuit Malfunction) are output simultaneously, E2 (sensor ground) may be open.

1	**Connect the OBD II scan tool or TOYOTA hand-held tester, and read value of engine coolant temp.**

PREPARATION:

(a) Connect the OBD II scan tool or TOYOTA hand-held tester to the DLC3.

(b) Turn ignition switch ON and push OBD II scan tool or TOYOTA hand-held tester main switch ON.

CHECK:

Read temperature value on the OBD II scan tool or TOYOTA hand-held tester.

OK:

Same as actual engine coolant temperature.

HINT:

- If there is open circuit, OBD II scan tool or TOYOTA hand-held tester indicates - 40˚C (- 40˚F).
- If there is short circuit, OBD II scan tool or TOYOTA hand−held tester indicates 140˚C (284˚F) or more.

NG → **- 40˚C (- 40˚F) ... Go to step 2.**
140˚C (284˚F) or more ... Go to step 4

OK

Check for intermittent problems (See page DI-3).

2	**Check for open in harness or ECM.**

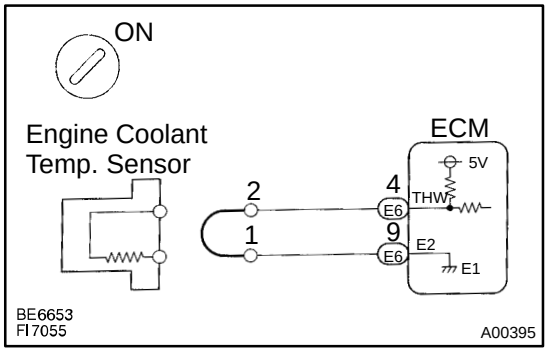

PREPARATION:

(a) Disconnect the engine coolant temp. sensor connector.

(b) Connect sensor wire harness terminals together.

(c) Turn ignition switch ON.

CHECK:

Read temperature value on the OBD II scan tool or TOYOTA hand-held tester.

OK:

Temperature value: 140˚C (284˚F) or more

OK → **Confirm good connection at sensor. If OK, replace engine coolant temp. sensor (See page SF-45).**

NG

3	Check for open in harness or ECM.

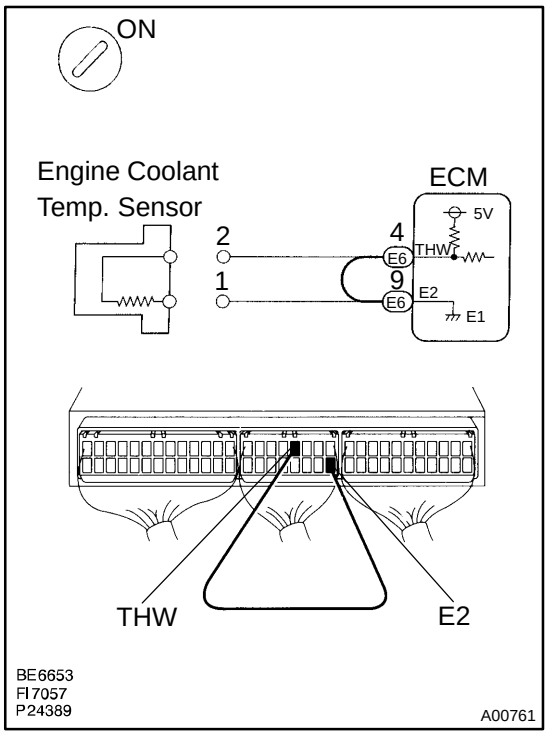

PREPARATION:

(a) Turn up the floor mat on the passenger side.

(b) Connect between terminals THW and E2 of ECM connector.

HINT:

Engine coolant temp. sensor connector is disconnected. Before checking, do a visual and contact pressure check for the ECM connector (See page IN-28).

(c) Turn ignition switch ON.

CHECK:

Read temperature value on the OBD II scan tool or TOYOTA hand-held tester.

OK:

Temperature value: 140˚C (284˚F) or more

OK → **Open in harness between terminals E2 or THW, repair or replace harness.**

NG

Confirm good connection at ECM. If OK, replace ECM.

4	Check for short in harness and ECM.

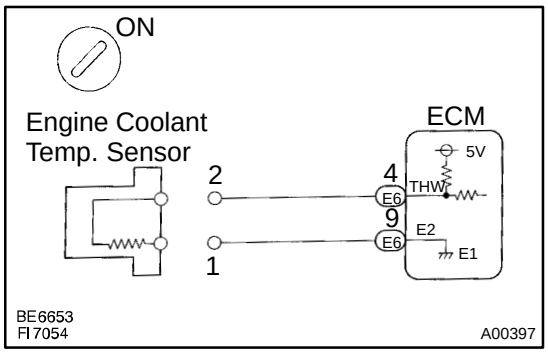

PREPARATION:

(a) Disconnect the engine coolant temp. sensor connector.

(b) Turn ignition switch ON.

CHECK:

Read temperature value on the OBD II scan tool or TOYOTA hand-held tester.

OK:

Temperature value: - 40˚C (- 40˚F)

OK	Replace engine coolant temp. sensor (See page SF-45).

NG

5	Check for short in harness or ECM.

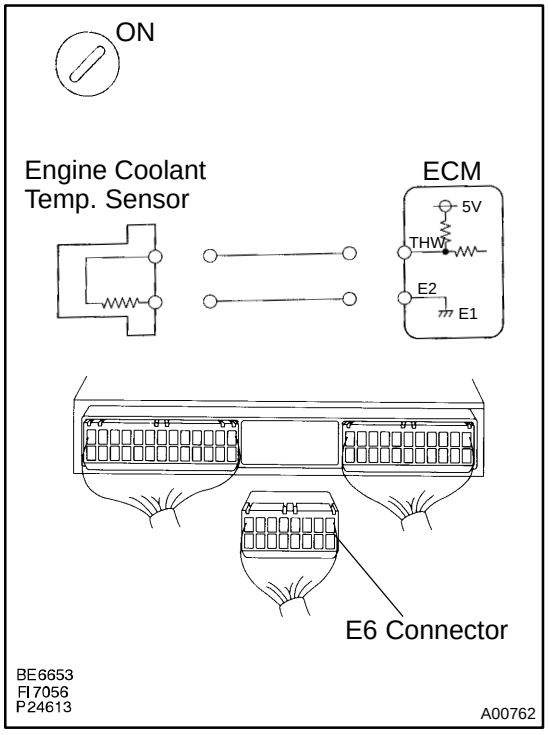

PREPARATION:

(a) Turn up the floor mat on the passenger side.

(b) Disconnect the ”E6” connector of ECM.

HINT:

Engine coolant temp. sensor connector is disconnected.

(c) Turn ignition switch ON.

CHECK:

Read temperature value on the OBD II scan tool or TOYOTA hand-held tester.

OK:

Temperature value: - 40˚C (- 40˚F)

OK	Repair or replace harness or connector.

NG

Check and replace ECM (See page IN-28).

DI51T-01

DTC	P0116	Engine Coolant Temp. Circuit Range/ Performance Problem

CIRCUIT DESCRIPTION

Refer to Engine Coolant Temp. Circuit Malfunction on page DI-137 .

DTC No.	DTC Detecting Condition	Trouble Area
P0116	When the engine starts, the water temp. is - 7˚C (20˚F) or less. And, 20 min. or more after the engine starts, the engine coolant temp. sensor value is 20˚C (68˚F) or less (2 trip detection logic)	• Engine coolant temp. sensor • Cooling system
	When the engine starts, the water temp. is between - 7˚C (20˚F) and 10˚C (50˚F). And, 5 min. or more after the engine starts, the engine coolant temp. sensor value is 20˚C (68˚F) or less (2 trip detection logic)	
	When the engine starts, the water temp. is 10˚C (50˚F) or more. And, 2 min. or more after the engine starts, the engine coolant temp. sensor value is 20˚C (68˚F) or less (2 trip detection logic)	

INSPECTION PROCEDURE

HINT:

If DTC ”P0115” (Engine Coolant Temp. Circuit Malfunction) and ”P0116” (Engine Coolant Temp. Circuit Range/Performance Problem) are output simultaneously, engine coolant temp. sensor circuit may be open. Perform troubleshooting of DTC P0115 first.

1	Are there any other codes (besides DTC P0116) being output?

YES → Go to relevant DTC chart.

NO

2	Check thermostat (See page CO-12).

NG → Replace thermostat.

OK

Replace engine coolant temp. sensor.

DI50Q-01

DTC	P0116	Engine Coolant Temp. Circuit Range/ Performance Problem

CIRCUIT DESCRIPTION

Refer to Engine Coolant Temp. Circuit Malfunction on page DI-30 .

DTC No.	DTC Detecting Condition	Trouble Area
P0116	If THW ⍰ -7˚C (19.4˚F), 20 min. or more after starting engine, engine coolant temp. sensor value is 35˚C (95˚F) or less (2 trip detection logic)	• Engine coolant temp. sensor • Cooling system
	If THW ⍰ -7˚C (19.4˚F), 5 min. or more after starting engine, engine coolant temp. sensor value is 35˚C (95˚F) or less (2 trip detection logic)	

INSPECTION PROCEDURE

HINT:

If DTC ”P0115” (Engine Coolant Temp. Circuit Malfunction) and ”P0116” (Engine Coolant Temp. Circuit Range/Performance Problem) are output simultaneously, engine coolant temp. sensor circuit may be open. Perform troubleshooting of DTC P0115 first.

1	Are there any other codes (besides DTC P0116) being output?

YES → Go to relevant DTC chart.

NO

2	Check thermostat (See page CO-10).

NG → Replace thermostat.

OK

Replace engine coolant temp. sensor (See page SF-45).

DI51U-01

DTC	P0120	Throttle/Pedal Position Sensor/Switch "A" Circuit Malfunction

CIRCUIT DESCRIPTION

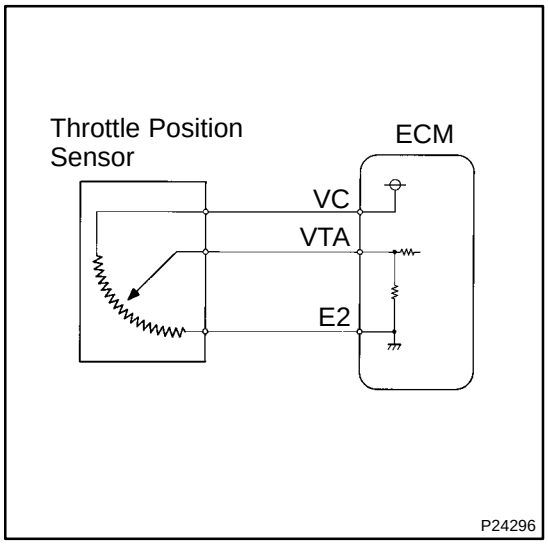

The throttle position sensor is mounted in the throttle body and detects the throttle valve opening angle. When the throttle valve is fully closed, a voltage of approximately 0.3 - 0.8 V is applied to terminal VTA of the ECM. The voltage applied to the terminal VTA of the ECM increases in proportion to the opening angle of the throttle valve and becomes approximately 3.2 - 4.9 V when the throttle valve is fully opened. The ECM judges the vehicle driving conditions from this signal input from terminal VTA, and uses them as one of the conditions for deciding the air-fuel ratio correction, power increase correction and fuel-cut control etc.

DTC No.	DTC Detecting Condition	Trouble Area
P0120	Condition (a) or (b) continues; (a) VTA < 0.1 V (b) VTA > 4.9 V	• Open or short in throttle position sensor circuit • Throttle position sensor • ECM

HINT:

After confirming DTC P0120 use the OBD II scan tool or TOYOTA hand-held tester to confirm the throttle valve opening percentage.

Throttle valve opening position expressed as percentage		Trouble Area
Throttle valve fully closed	Throttle valve fully open	
0 %	0 %	VC line open VTA line open or short
Approx. 100 %	Approx. 100 %	E2 line open

WIRING DIAGRAM

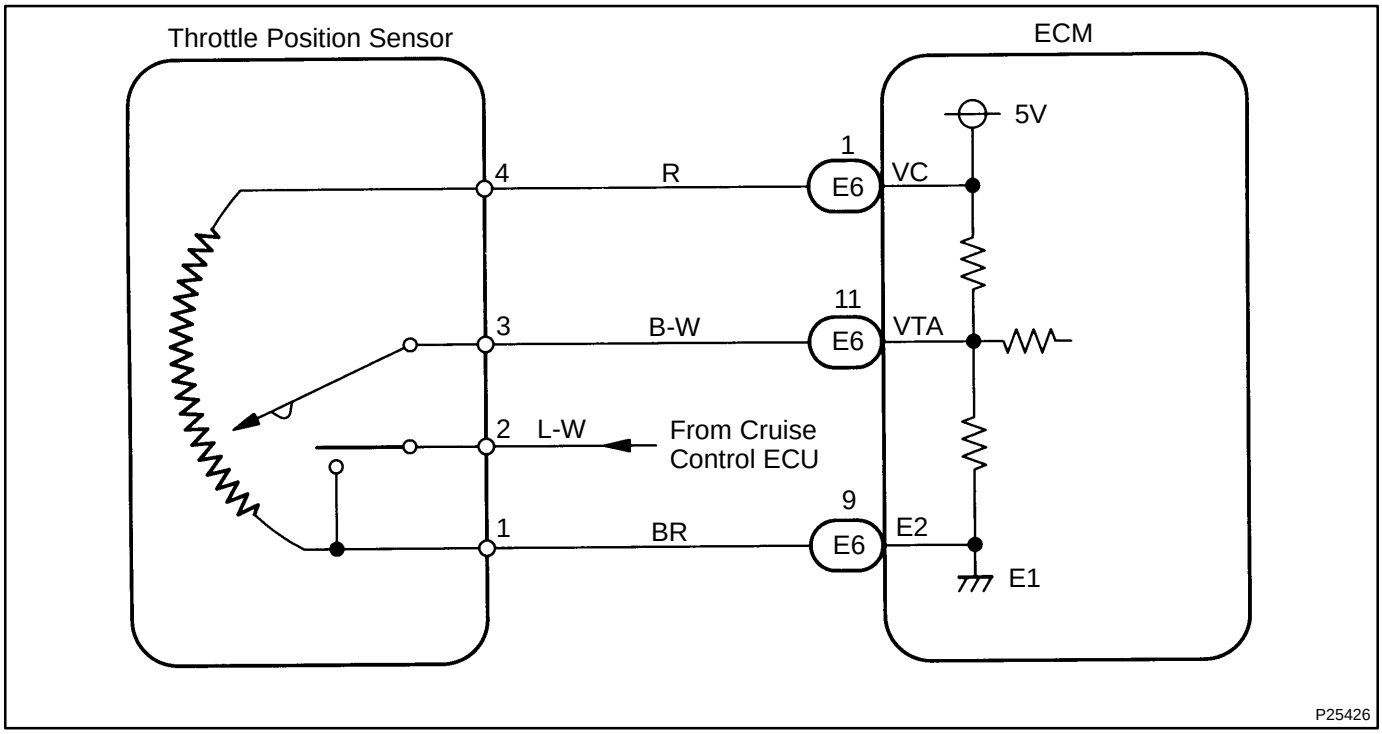

INSPECTION PROCEDURE

HINT:

If DTC P0105, P0106, P0110, P0115 and P0120 are output simultaneously, E2 (sensor ground) may be open.

1	**Connect the OBD II scan tool or TOYOTA hand-held tester and read the throttle valve opening percentage.**

PREPARATION:

(a) Connect the OBD II scan tool or TOYOTA hand-held tester to DLC3.

(b) Turn ignition switch ON and OBD II scan tool or TOYOTA hand-held tester main switch ON.

CHECK:

Read the throttle valve opening percentage.

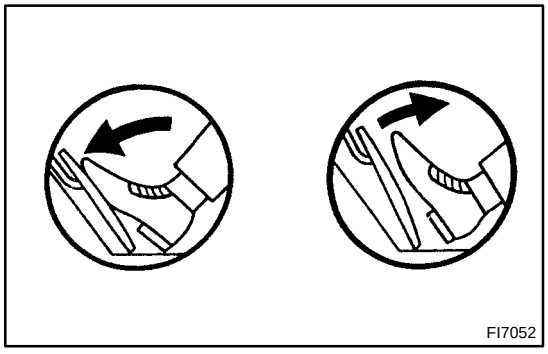

OK:

Throttle valve	Throttle valve opening position expressed as percentage
Fully open	Approx. 70 %
Fully closed	Approx. 10 %

OK → **Check for intermittent problems (See page DI-1 10).**

NG

2	**Check voltage between terminal VC of wire harness side connector and body ground.**

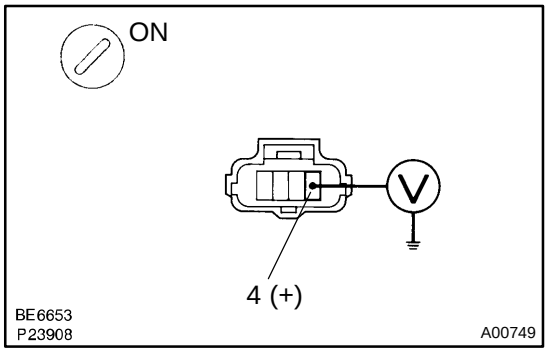

PREPARATION:

(a) Disconnect the throttle position sensor connector.

(b) Turn ignition switch ON.

CHECK:

Measure voltage between terminal VC of wire harness side connector and body ground.

OK:

Voltage: 4.5 - 5.5 V

NG → **Go to step 5.**

OK

3	**Check throttle position sensor (See page SF-35).**

NG → **Replace throttle position sensor.**

OK

4	Check voltage between terminals VTA and E2 of ECM connector.

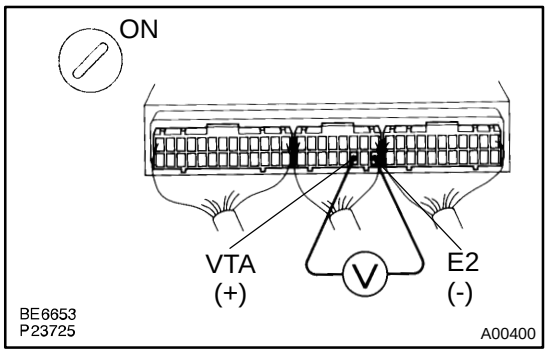

PREPARATION:

(a) Turn up the floor mat on the passenger side.

(b) Turn ignition switch ON.

CHECK:

Measure voltage between terminals VTA and E2 of ECM connector.

OK:

Throttle valve	Voltage
Fully closed	0.3 - 1.0 V
Fully open	3.2 - 4.9 V

NG → **Check for open and short in harness and connector between ECM and throttle position sensor (VTA or E2 line) (See page IN-28).**

OK

Check and replace ECM (See page IN-28).

5	Check voltage between terminals VC and E2 of ECM connector.

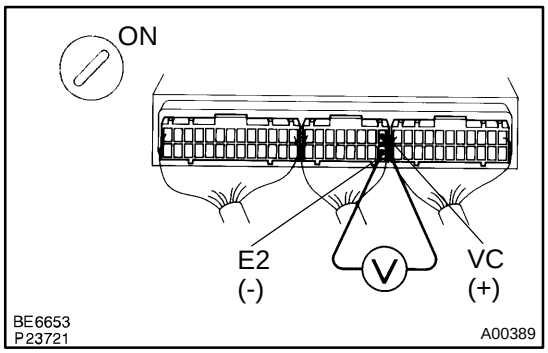

PREPARATION:

(a) Turn up the floor mat on the passenger side.

(b) Turn ignition switch ON.

CHECK:

Measure voltage between terminals VC and E2 of ECM connector.

OK:

Voltage: 4.5 - 5.5 V

NG → **Check and replace ECM (See page IN-28).**

OK

Check for open in harness and connector between ECM and sensor (VC line) (See page IN-28).

DI50R-02

DTC	P0120	Throttle/Pedal Position Sensor/Switch ”A” Circuit Malfunction

CIRCUIT DESCRIPTION

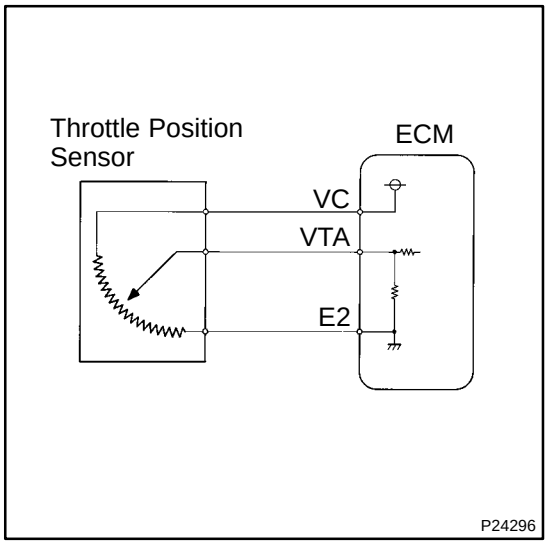

The throttle position sensor is mounted in the throttle body and detects the throttle valve opening angle. When the throttle valve is fully closed, a voltage of approximately 0.3 - 0.8 V is applied to terminal VTA of the ECM. The voltage applied to the terminals VTA of the ECM increases in proportion to the opening angle of the throttle valve and becomes approximately 3.2 - 4.9 V when the throttle valve is fully opened. The ECM judges the vehicle driving conditions from this signal input from terminals VTA, and uses it as one of the conditions for deciding the air-fuel ratio correction, power increase correction and fuel-cut control etc.

DTC No..	DTC Detecting Condition	Trouble Area
P0120	Condition (a) or (b) continues: (a) VTA < 0.1 V (b) VTA > 4.9 V	• Open or short in throttle position sensor circuit • Throttle position sensor • ECM

HINT:

After confirming DTC P0120 use the OBD II scan tool or TOYOTA hand-held tester to confirm the throttle valve opening percentage.

Throttle valve opening position expressed as percentage		Trouble Area
Throttle valve fully closed	Throttle valve fully open	
0 %	0 %	VC line open VTA line open or short
Approx. 100 %	Approx. 100 %	E2 line open

WIRING DIAGRAM

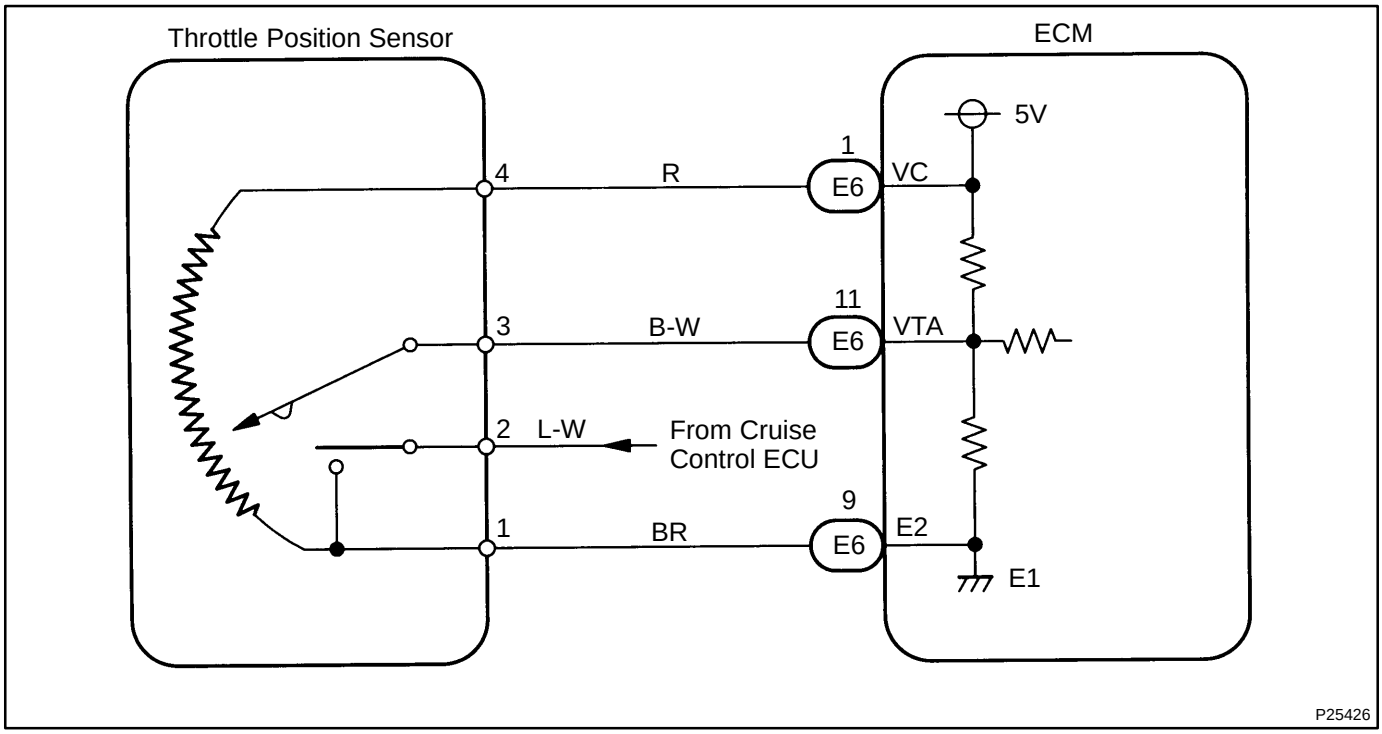

INSPECTION PROCEDURE

HINT:

If DTC ”P0105” (Manifold Absolute Pressure/Barometric Pressure Circuit Malfunction), ”P0106” (Manifold Absolute Pressure/Barometric Pressure Circuit Range/Performance Problem), ”P0110” (Intake Air Temp. Circuit Malfunction), ”P0115” (Engine Coolant Temp. Circuit Malfunction), ”P0120” (Throttle/Pedal Position Sensor/Switch ”A” Circuit Malfunction) are output simultaneously, E2 (sensor ground) may be open.

1	**Connect the OBD II scan tool or TOYOTA hand-held tester, read the throttle valve opening percentage.**

PREPARATION:

(a) Connect the OBD II scan tool or TOYOTA hand-held tester to DLC3.

(b) Turn ignition switch ON and push the OBD II scan tool or TOYOTA hand-held tester main switch ON.

CHECK:

Read the throttle valve opening percentage.

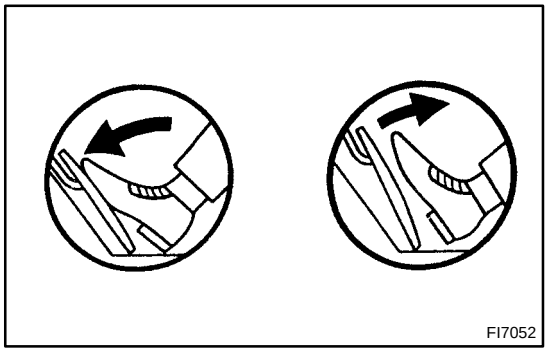

OK:

Throttle valve	Throttle valve opening position expressed as percentage
Fully open	Approx. 70 %
Fully closed	Approx. 10 %

OK → **Check for intermittent problems (See page DI-3).**

NG

2	**Check voltage between terminal 4 of wire harness side connector and body ground.**

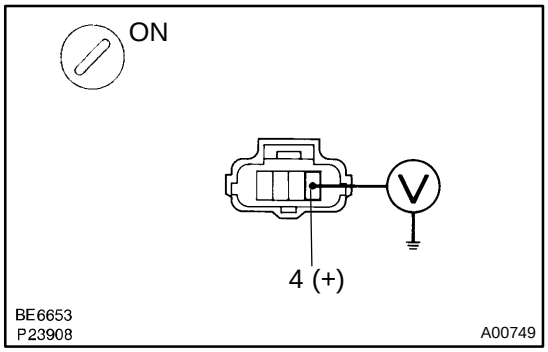

PREPARATION:

(a) Disconnect the throttle position sensor connector.

(b) Turn ignition switch ON.

CHECK:

Measure voltage between terminal VCC of wire harness side connector and body ground.

OK:

Voltage: 4.5 - 5.5 V

NG → **Go to step 5.**

OK

3	**Check throttle position sensor (See page SF-28).**

NG → **Replace throttle position sensor (See page SF-30).**

OK

4	Check voltage between terminals VTA and E2 of ECM connector.

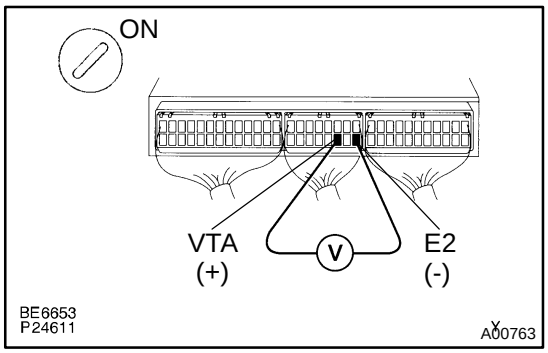

PREPARATION:

(a) Turn up the floor mat on the passenger side.

(b) Turn ignition switch ON.

CHECK:

Measure voltage between terminals VTA and E2 of ECM connector.

OK:

Throttle valve	Voltage
Fully closed	0.3 - 0.8 V
Fully open	3.2 - 4.9 V

NG → **Check for open and short in harness and connector between ECM and throttle position sensor (VTA or E2 line) (See page IN-28).**

OK →

Check and replace ECM (See page IN-28).

5	Check voltage between terminals VC and E2 of ECM connector.

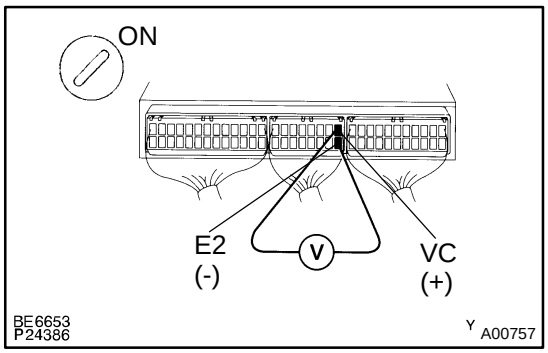

PREPARATION:

(a) Turn up the floor mat on the passenger side.

(b) Turn ignition switch ON.

CHECK:

Measure voltage between terminals VC and E2 of ECM connector.

OK:

Voltage 4.5 - 5.5 V

NG → **Check and replace ECM (See page IN-28).**

OK →

Check for open in harness and connector between ECM and sensor (VC line) (See page IN-28).

DI51V-01

DTC	P0121	Throttle/Pedal Position Sensor/Switch ”A” Circuit Range/Performance Problem

CIRCUIT DESCRIPTION

Refer to Throttle/Pedal Position Sensor/Switch ”A” Circuit Malfunction on page DI-143 .

DTC No.	Detection Item	Trouble Area
P0121	After the vehicle speed has been exceeded 30 km/h (19 mph) even once, the output value of the throttle position sensor is out of the applicable range while the vehicle speed between 30 km/h (19 mph) and 0 km/h (0 mph). (2 trip detection logic)	• Throttle position sensor

INSPECTION PROCEDURE

1	Are there any other codes (besides DTC P0121) being output?

YES → Go to relevant DTC chart.

NO →

Replace throttle position sensor.

DI50S-01

DTC	P0121	Throttle/Pedal Position Sensor/Switch ”A” Circuit Range/Performance Problem

CIRCUIT DESCRIPTION

Refer to Throttle/Pedal Position Sensor/Switch ”A” Circuit Malfunction on page DI-35 .

DTC No.	Detection Item	Trouble Area
P0121	After the vehicle speed has been exceeded 30 km/h (19 mph) even once, the output value of the throttle position sensor is out of the applicable range while the vehicle speed between 30 km/h (19 mph) and 0 km/h (0 mph). (2 trip detection logic)	• Throttle position sensor

INSPECTION PROCEDURE

1	Are there any other codes (besides DTC P0121) being output?

YES → Go to relevant DTC chart.

NO →

Replace throttle position sensor (See page SF-30).

DI51W-02

DTC	P0125	Insufficient Coolant Temp. for Closed Loop Fuel Control

CIRCUIT DESCRIPTION

To obtain a high purification rate for the CO, HC and NOx components of the exhaust gas, a three-way catalytic converter is used, but for the most efficient use of the three-way catalytic converter, the air-fuel ratio must be precisely controlled so that it is always close to the stoichiometric air-fuel ratio.

The oxygen sensor has the characteristic where by its output voltage changes suddenly in the vicinity of the stoichiometric air-fuel ratio. This characteristic is used to detect the oxygen concentration in the exhaust gas and provide feedback to the computer for control of the air-fuel ratio.

When the air-fuel ratio becomes LEAN, the oxygen concentration in the exhaust increases and the oxygen sensor informs the ECM of the LEAN condition (small electromotive force: 0 V).

When the air-fuel ratio is RICHER than the stoichiometric air-fuel ratio the oxygen concentration in the exhaust gas in reduced and the oxygen sensor informs the ECM of the RICH condition (large electromotive force: 1 V).

The ECM judges by the electromotive force from the oxygen sensor whether the air-fuel ratio is RICH or LEAN and controls the injection time accordingly. However, if malfunction of the oxygen sensor causes output of abnormal electromotive force, the ECM is unable to perform accurate air-fuel ratio control.

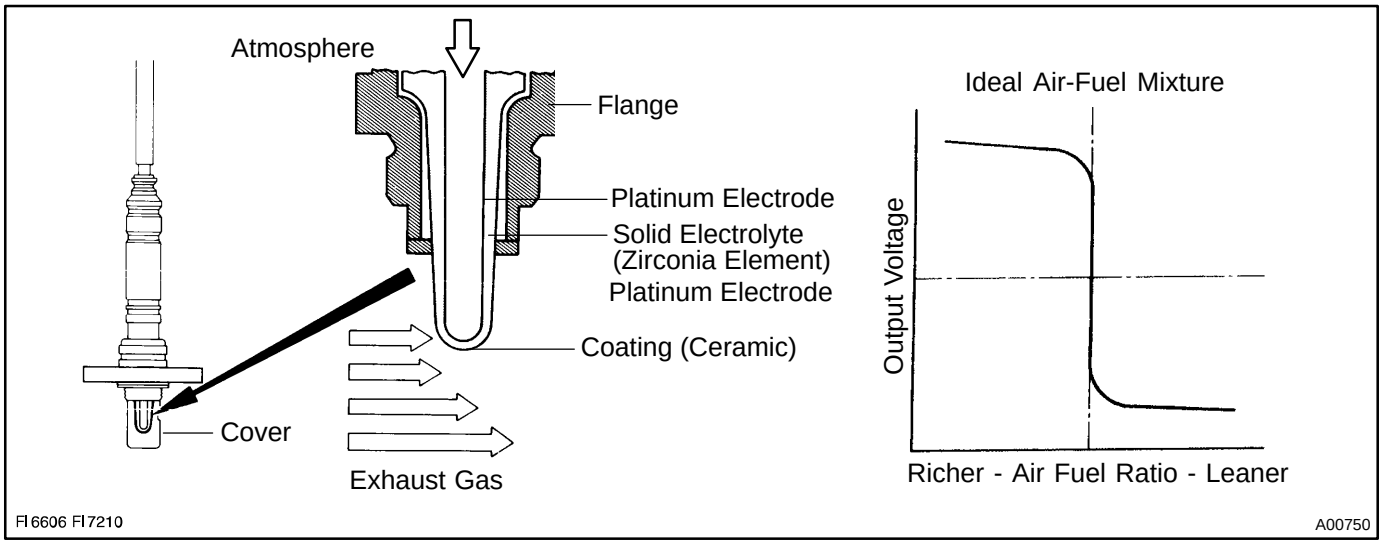

DTC No.	DTC Detecting Condition	Trouble Area
P0125	After the engine is warmed up, oxygen sensor output does not indicate RICH even once when conditions (a), (b), and (c) continue for at least 1.5 min. (a) Engine speed: 1,500 rpm or more (b) Vehicle speed: 40 - 100 km/h (25 - 62 mph) (c) Throttle valve does not fully closed	• Open or short in oxygen sensor circuit • Oxygen sensor

HINT:

After confirming DTC P0125 use the OBD II scan tool or TOYOTA hand−held tester to confirm voltage output of oxygen sensor from ”CURRENT DATA”.

If voltage output of oxygen sensor is 0 V, oxygen sensor circuit may be open or short.

WIRING DIAGRAM

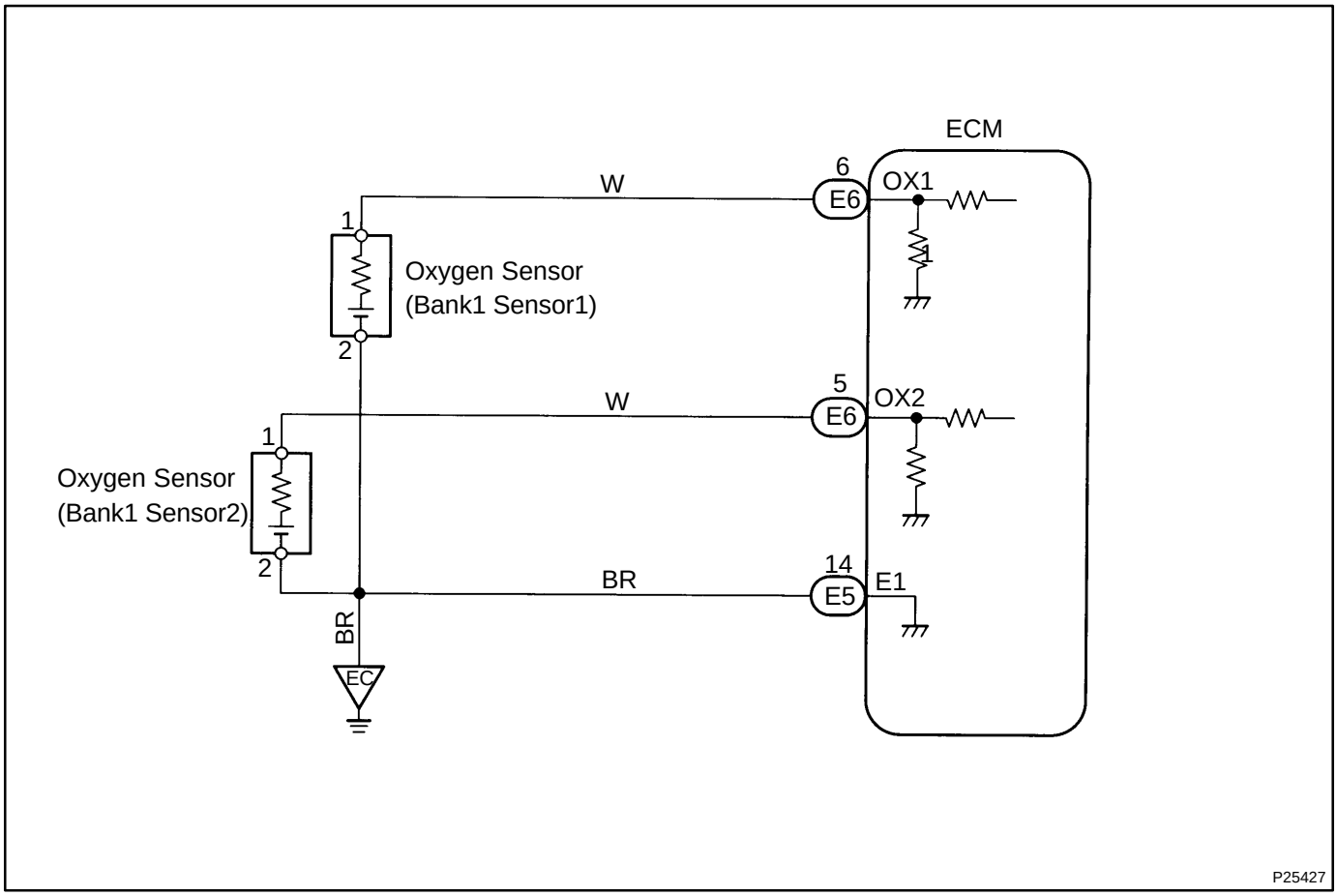

INSPECTION PROCEDURE

1	**Connect the OBD II scan tool or TOYOTA hand-held tester and read value for voltage output of oxygen sensor.**

PREPARATION:

(a) Connect the OBD II scan tool or TOYOTA hand-held tester to the DLC3.

(b) Warm up engine to normal operating temperature.

CHECK:

Read voltage output of oxygen sensor (brank 1 sensor 1) when engine is suddenly raced.

HINT:

Perform quick racing to 4,000 rpm 3 times using accelerator pedal.

OK:

Oxygen sensor output a RICH signal (0.45 V or more) at least once.

OK → **Check and replace ECM (See page IN-28).**

NG

2	**Check for open and short in harness and connector between ECM and oxygen sensor (See page IN-28).**

NG → **Repair or replace harness or connector.**

OK

Replace oxygen sensor.

DI50T-01

DTC	P0125	Insufficient Coolant Temp. for Closed Loop Fuel Control

CIRCUIT DESCRIPTION

To obtain a high purification rate for the CO, HC and NOx components of the exhaust gas, a three-way catalytic converter is used, but for the most efficient use three-way catalytic converter, the air-fuel ratio must be precisely controlled so that it is always close to the stoichiometric air-fuel ratio.

The oxygen sensor has the characteristic where by its output voltage changes suddenly in the vicinity of the stoichiometric air-fuel ratio. This characteristic is used to detect the oxygen concentration in the exhaust gas and provide feedback to the computer for control of the air-fuel ratio.

When the air-fuel ratio becomes LEAN, the oxygen concentration in the exhaust increases and the oxygen sensor informs the ECM of the LEAN condition (small electromotive force: 0 V).

When the air-fuel ratio is RICHER than the stoichiometric air-fuel ratio the oxygen concentration in the exhaust gas in reduced and the oxygen sensor informs the ECM of the RICH condition (large electromotive force: 1V).

The ECM judges by the electromotive force from the oxygen sensor whether the air-fuel ratio is RICH or LEAN and controls the injection time accordingly. However, if malfunction of the oxygen sensor causes output of abnormal electromotive force, the ECM is unable to perform accurate air-fuel ratio control.

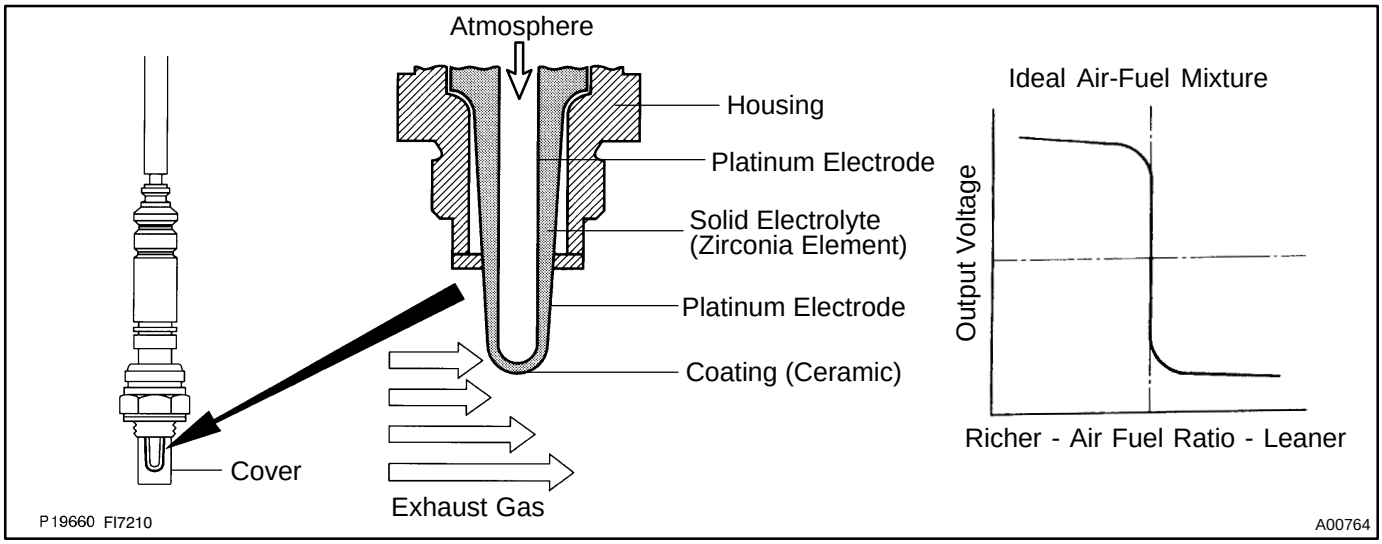

DTC No.	DTC Detecting Condition	Trouble Area
P0125	After the engine is warmed up, oxygen sensor output does not indicate RICH even once when conditions (a), (b), (c) and (d) continue for at least 1.5 min. (a) Engine speed: 1,500 rpm or more (b) Vehicle speed: 40 - 100 km/h (25 - 62 mph) (c) Throttle valve is opened (d) Engine has been started for at least 140 sec.	• Open or short in oxygen sensor circuit • Oxygen sensor (bank 1 sensor 1)

HINT:

After confirming DTC P0125 use the OBD II scan tool or TOYOTA hand−held tester to confirm voltage output of oxygen sensor from ”CURRENT DATA”.

If voltage output of oxygen sensor is 0 V, oxygen sensor circuit may be open or short.

WIRING DIAGRAM

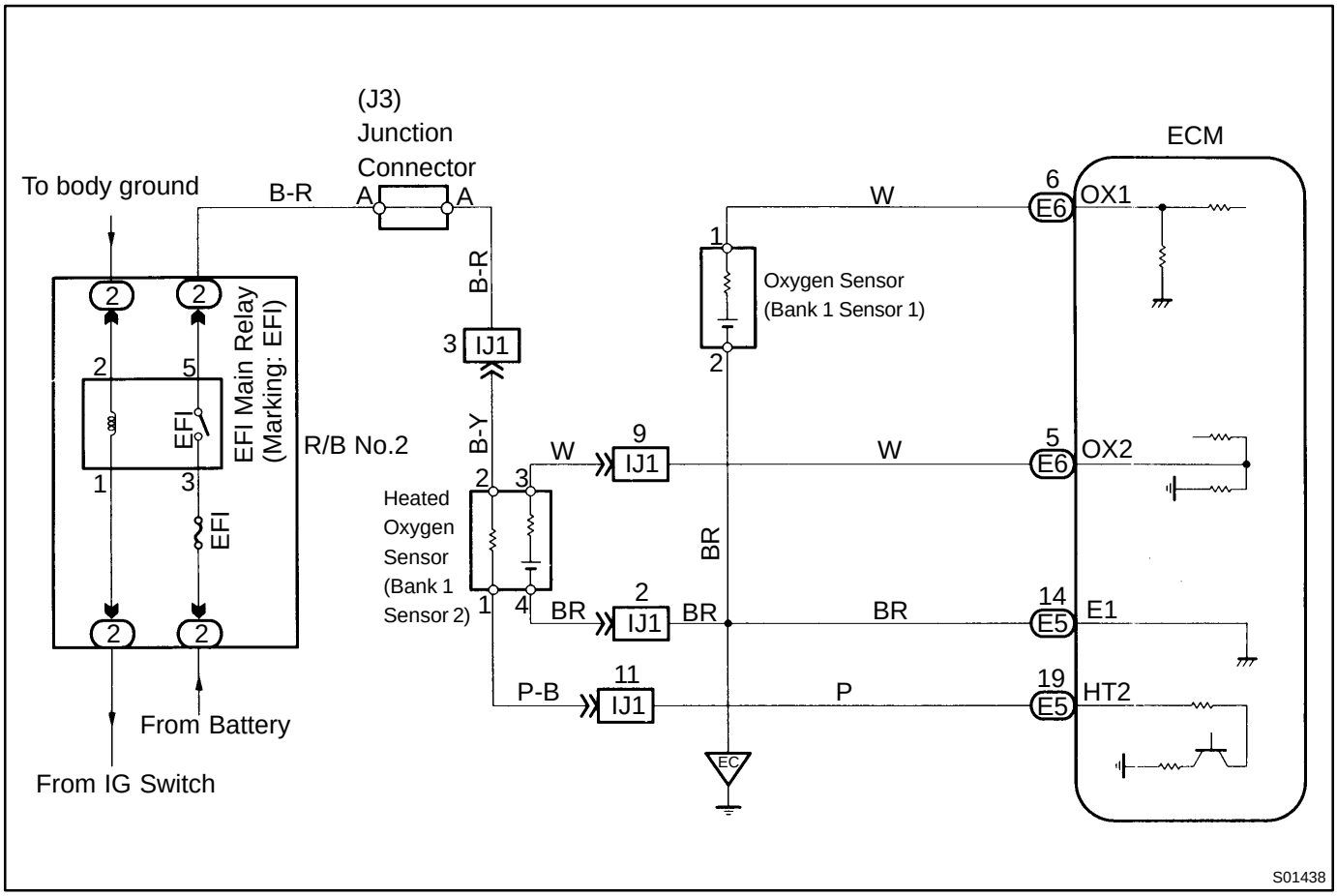

INSPECTION PROCEDURE

1	**Connect the OBD II scan tool or TOYOTA hand-held tester and read value for voltage output of oxygen sensor (bank 1 sensor 1).**

PREPARATION:

(a) Connect the OBD II scan tool or TOYOTA hand-held tester to the DLC3.

(b) Warm up engine to normal operating temperature.

CHECK:

Read voltage output of oxygen sensor (bank 1 sensor 1) when engine is suddenly raced.

HINT:

Perform quick racing to 4,000 rpm 3 times using accelerator pedal.

OK:

Oxygen sensor output a RICH signal (0.45 V or more) at least once.

OK → **Check and replace ECM (See page IN-28).**

NG

2	**Check for open and short in harness and connector between ECM and oxygen sensor (bank 1 sensor 1) (See page IN-28).**

NG → **Repair or replace harness or connector.**

OK

Replace oxygen sensor (bank 1 sensor 1).

DI51X-01

DTC	P0130	Oxygen Sensor Circuit Malfunction (Bank 1 Sensor 1)

CIRCUIT DESCRIPTION

Refer to Insufficient Coolant Temp. for Closed Loop Fuel Control on page DI-148 .

DTC No.	DTC Detecting Condition	Trouble Area
P0130	Voltage output of oxygen sensor remains at 0.4 V*1 0.35 V*2 or more, or 0.55 V or less, during idling after the engine is warmed up (2 trip detection logic)	• Oxygen sensor • Fuel trim malfunction

*1: Except California specification vehicles
*2: Only for California specification vehicles
HINT:
Sensor 1 refers to the sensor closer to the engine body.
The oxygen sensor's output voltage and the short−term fuel trim value can be read using the OBD II scan tool or TOYOTA hand−held tester.

WIRING DIAGRAM

Refer to page DI-148 for the WIRING DIAGRAM.

CONFIRMATION DRIVING PATTERN

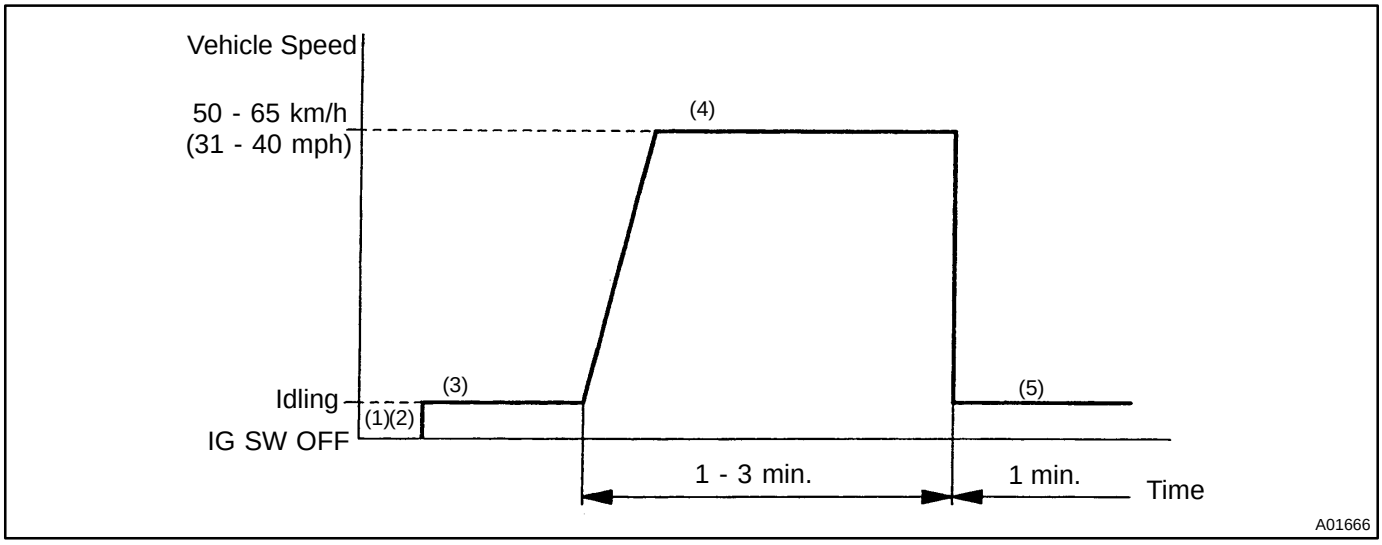

(1) Connect the TOYOTA hand-held tester to the DLC3.
(2) Switch the TOYOTA hand-held tester from normal mode to check mode (See page DI-1 10).
(3) Start the engine and warm it up with all accessory switches OFF.
(4) Drive the vehicle at 50 - 65 km/h (31 - 40 mph) for 1 - 3 min. to warm up the oxygen sensor.
(5) Idle the engine for 1 min.
HINT:
If a malfunction exists, the MIL will light up during step (5).
NOTICE:
If the conditions in this test are not strictly followed, detection of the malfunction will not be possible. If you do not have a TOYOTA hand-held tester, turn the ignition switch OFF after performing steps (3) to (5), then perform steps (3) to (5) again.

INSPECTION PROCEDURE

1	**Check for open and short in harness and connector between ECM and oxygen sensor (See page IN-28).**

NG → **Repair or replace harness or connector.**

OK

2	**Check for oxygen sensor data.**

PREPARATION:

(a) Connect the OBD II scan tool or TOYOTA hand-held tester to the DLC3.

(b) Warm up engine to normal operating temperature.

CHECK:

Read the oxygen sensor output voltage and short-term fuel trim.

RESULT:

Pattern	Oxygen sensor output voltage	Short-term fuel trim
1	Lean condition (Changes at 0.55 V or less)	Changes at about + 20 %
2	RIch condition (Changes at 0.4 V or more)	Changes at about - 20 %
3	Except 1 and 2	

1, 2 → **Check fuel trim system (See page DI-157).**

3

3	**Check the output voltage of oxygen sensor during idling.**

PREPARATION:

Warm up the oxygen sensor with the engine at 2,500 rpm for approx. 90 sec.

CHECK:

Use the OBD II scan tool or TOYOTA hand-held tester read the output voltage of the oxygen sensor during idling.

OK:

Oxygen sensor output voltage:

Alternates repeatedly between approx 0.4 V and approx 0.55 V (See the following table).

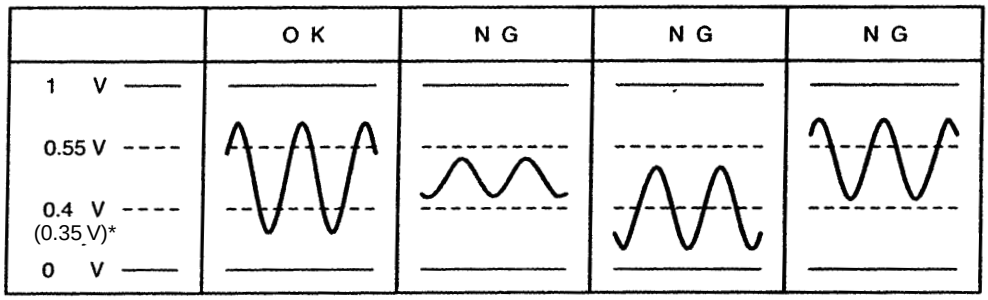

P18349

*: Only for California specification vehicle

OK → **Perform confirmation driving pattern (See page DI-151).**

NG

Replace oxygen sensor.

DI50U-01

DTC	P0130	Oxygen Sensor Circuit Malfunction (Bank 1 Sensor 1)

CIRCUIT DESCRIPTION

Refer to Insufficient Coolant Temp. for Closed Loop Fuel Control on page DI-40 .

DTC No.	DTC Detecting Condition	Trouble Area
P0130	Voltage output of oxygen sensor remains at 0.4 V or more, or 0.55 V or less, during idling after the engine is warmed up (2 trip detection logic)	• Oxygen sensor • Fuel trim malfunction

HINT:

Sensor 1 refers to the sensor closer to the engine body.

The oxygen sensor's output voltage and the short−term fuel trim value can be read using the OBD II scan tool or TOYOTA hand−held tester.

WIRING DIAGRAM

Refer to page DI-40 for the WIRING DIAGRAM.

CONFIRMATION DRIVING PATTERN

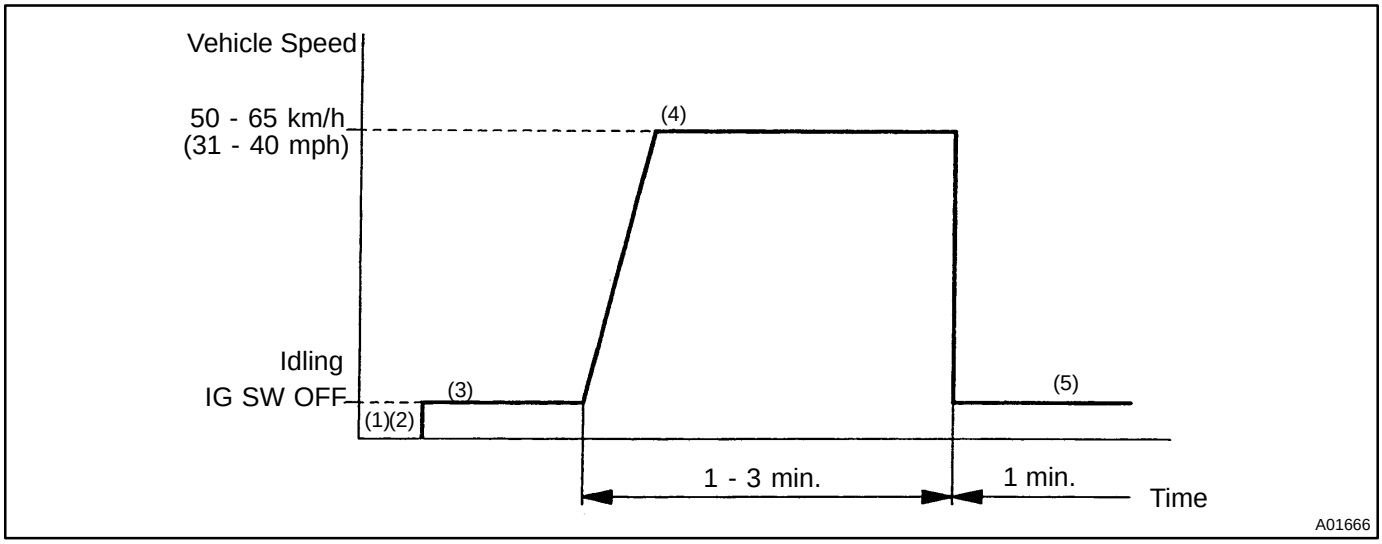

(1) Connect the TOYOTA hand-held tester to the DLC3.

(2) Switch the TOYOTA hand-held tester from normal mode to check mode (See page DI-3).

(3) Start the engine and warm it up with all accessory switches OFF.

(4) Drive the vehicle at 50 - 65 km/h (31 – 40 mph) for 1 – 3 min. to warm up the oxygen sensor.

(5) Idle the engine for 1 min.

HINT:

If a malfunction exists, the MIL will light up during step (5).

NOTICE:

If the conditions in this test are not strictly followed, detection of the malfunction will not be possible. If you do not have a TOYOTA hand-held tester, turn the ignition switch OFF after performing steps (3) to (5), then perform steps (3) to (5) again.

INSPECTION PROCEDURE

1	**Check for open and short in harness and connector between ECM and oxygen sensor (See page IN-28).**

NG → **Repair or replace harness or connector.**

OK

2	**Check for oxygen sensor data.**

PREPARATION:

(a) Connect the OBD II scan tool or TOYOTA hand-held tester to the DLC3.

(b) Warm up engine to normal operating temp.

CHECK:

Read the oxygen sensor output voltage and short-term fuel trim.

RESULT:

Pattern	Oxygen sensor output voltage	Short-term fuel trim
1	Lean condition (Changes at 0.55 V or less)	Changes at about + 20 %
2	RIch condition (Changes at 0.4 V or more)	Changes at about - 20 %
3	Except 1 and 2	

1, 2 → **Check fuel trim system (See page DI-50).**

3

3	**Check the output voltage of oxygen sensor during idling.**

PREPARATION:

Warm up the oxygen sensor with the engine at 2,500 rpm for approx. 90 sec.

CHECK:

Use the OBD II scan tool or TOYOTA hand-held tester read the output voltage of the oxygen sensor during idling.

OK:

Oxygen sensor output voltage:

Alternates repeatedly between approx. 0.4 V and approx. 0.55 V (See the following table).

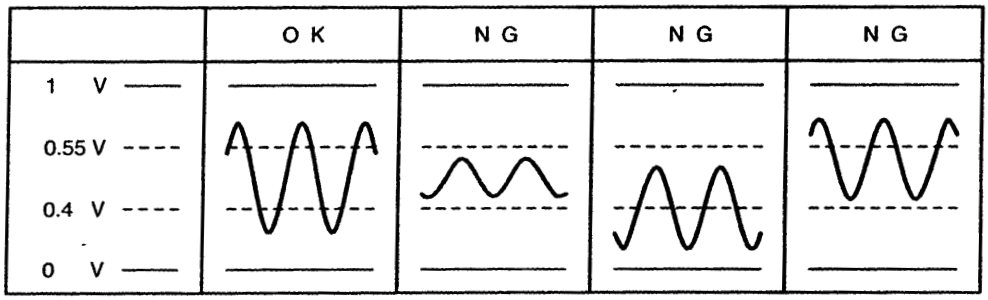

P18349

OK → **Perform confirmation driving pattern (See page DI-43).**

NG

Replace oxygen sensor.

DI51Y-01

DTC	P0133	Oxygen Sensor Circuit Slow Response (Bank 1 Sensor 1)

CIRCUIT DESCRIPTION

Refer to Insufficient Coolant Temp. for Closed Loop Fuel Control on page DI-148

DTC No.	DTC Detecting Condition	Trouble Area
P0133	Response time for the oxygen sensor's voltage output to change from rich to lean, or from lean to rich, is 1 sec. or more during idling after the engine is warmed up (2 trip detection logic)	• Oxygen sensor

HINT:

Sensor 1 refers to the sensor closer to the engine body.

INSPECTION PROCEDURE

1	**Are there any other codes (besides DTC P0133) being output?**

YES → **Go to relevant DTC chart.**

NO

Replace oxygen sensor.

DI50V-01

DTC	P0133	Oxygen Sensor Circuit Slow Response (Bank 1 Sensor 1)

CIRCUIT DESCRIPTION

Refer to Insufficient Coolant Temp. for Closed Loop Fuel Control on page DI-40

DTC No.	DTC Detecting Condition	Trouble Area
P0133	Response time for the oxygen sensor's voltage output to change from rich to lean, or from lean to rich, is 1 sec. or more during idling after the engine is warmed up (2 trip detection logic)	• Oxygen sensor

HINT:
Sensor 1 refers to the sensor closer to the engine body.

INSPECTION PROCEDURE

1	**Are there any other codes (besides DTC P0133) being output?**

YES → **Go to relevant DTC chart.**

NO

Replace oxygen sensor.

DI51Z-01

DTC	P0136	Oxygen Sensor Circuit Malfunction (Bank 1 Sensor 2)

CIRCUIT DESCRIPTION

Refer to Insufficient Coolant Temp. for Closed Loop Fuel Control on page DI-148 .

DTC No.	DTC Detecting Condition	Trouble Area
P0136	Voltage output of the oxygen sensor (bank 1 sensor 2) remains at 0.4 V or more, or 0.5 V or less when the vehicle is driven at 40 km/h (25 mph) or more after the engine is warmed up. (2 trip detection logic).	• Oxygen sensor

HINT:
Sensor 2 refers to the sensor farther away from the engine body.

WIRING DIAGRAM

Refer to DI-148 for the WIRING DIAGRAM.

INSPECTION PROCEDURE

1	**Are there any other codes (besides DTC P0136) being output?**

YES → **Go to relevant DTC chart.**

NO

2	**Check for open and short in harness and connector between ECM and oxygen sensor (See page IN-28).**

NG → **Repair or replace harness or connector.**

OK

3	**Check the output voltage of oxygen sensor (bank 1 sensor 2).**

PREPARATION:

(a) Connect the OBD II scan tool or TOYOTA hand-held tester to the DLC3.

(b) Warm up engine to normal operating temperature.

CHECK:

Read the output voltage of oxygen sensor (bank 1 sensor 2) when engine is suddenly raced.

HINT:

Perform quick racing to 4,000 rpm 3 mins using accelerator pedal.

OK:

Oxygen sensor output voltage: Alternates from 0.4 V or less to 0.5 V or more.

OK → **Check that each connector is properly connected.**

NG

Replace oxygen sensor.

DI50W-01

DTC	P0136	Heated Oxygen Sensor Circuit Malfunction (Bank 1 Sensor 2)

CIRCUIT DESCRIPTION

Refer to Insufficient Coolant Temp. for Closed Loop Fuel Control on page DI-40 .

DTC No.	DTC Detecting Condition	Trouble Area
P0136	Voltage output of the heated oxygen sensor (bank 1 sensor 2) remains at 0.4 V or more, or 0.5 V or less when the vehicle is driven at 40 km/h (25 mph) or more after the engine is warmed up. (2 trip detection logic).	• Heated oxygen sensor

HINT:
Sensor 2 refers to the sensor farther away from the engine body.

WIRING DIAGRAM

Refer to page DI-40 for the WIRING DIAGRAM.

INSPECTION PROCEDURE

1	**Are there any other codes (besides DTC P0136) being output?**

YES → **Go to relevant DTC chart.**

NO

2	**Check for open and short in harness and connector between ECM and heated oxygen sensor (See page IN-28).**

NG → **Repair or replace harness or connector.**

OK

3	**Check the output voltage of heated oxygen sensor (bank 1 sensor 2).**

PREPARATION:

(a) Connect the OBD II scan tool or TOYOTA hand-held tester to the DLC3.

(b) Warm up engine to normal operating temperature.

CHECK:

Read the output voltage of heated oxygen sensor (bank 1 sensor 2) when engine suddenly raced.

HINT:

Perform quick racing to 4,000 rpm 3 min. using accelerator pedal.

OK:

Heated oxygen sensor output voltage: Alternates from 0.4 V or less to 0.5 V or more.

OK → **Check that each connector is properly connected.**

NG

Replace heated oxygen sensor.

DI50X-01

DTC	P0141	Heated Oxygen Sensor Heater Circuit Malfunction (Bank 1 Sensor 2)

CIRCUIT DESCRIPTION

Refer to Insufficient Coolant Temp. for Closed Loop Fuel Control on page DI-40 .

DTC No.	DTC Detecting Condition	Trouble Area
P0141	When the heater operates, heater current exceeds 2.75 A (2 trip detection logic)	• Open or short in heater circuit of heated oxygen sensor • Heated oxygen sensor heater • ECM
	Heater current of 0.2 A or less when the heater operates (2 trip detection logic)	

HINT:

Sensor 2 refers to the sensor farther away from the engine body.

INSPECTION PROCEDURE

1	Check voltage between terminals HT2 of ECM connector and body ground.

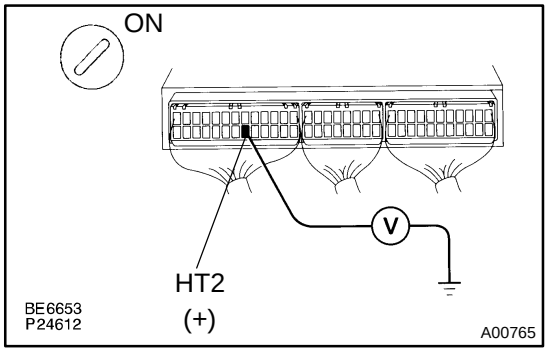

PREPARATION:

(a) Turn up the floor mat on the passenger side.

(b) Turn ignition switch ON.

CHECK:

Measure voltage between terminals HT2 of ECM connector and body ground.

OK:

Voltage: 9 - 14 V

OK → **Check and replace ECM (See page IN-28).**

NG

2	Check resistance of heated oxygen sensor heater (See page SF-52).

NG → **Replace heated oxygen sensor.**

OK

Check and repair harness or connector between EFI main relay (Marking: EFI) and heated oxygen sensor and ECM.

DI520-01

DTC	P0171	System too Lean (Fuel Trim)

DTC	P0172	System too Rich (Fuel Trim)

CIRCUIT DESCRIPTION

”Fuel trim” refers to the feedback compensation value compared against the basic injection time. Fuel trim includes short-term fuel trim and long-term fuel trim.

”Short-term fuel trim” is the short-term fuel compensation used to maintain the air-fuel ratio at its ideal theoretical value. The signal from the oxygen sensor indicates whether the air-fuel ratio is RICH or LEAN compared to the ideal theoretical value, triggering a reduction in fuel volume if the air-fuel ratio is rich, and an increase in fuel volume if it is lean.

”Long-term fuel trim” is overall fuel compensation carried out long-term to compensate for continual deviation of the short-term fuel trim form the central value due to individual engine differences, wear over time and changes in the usage environment.

If both the short-term fuel trim and long-term fuel trim are LEAN or RICH beyond a certain value, it is detected as a malfunction and the MIL lights up.

DTC No.	DTC Detecting Condition	Trouble Area
P0171	When the air-fuel ratio feedback is stable after engine warming up, the fuel trim is considerably in error on the RICH side (2 trip detection logic)	• Air intake (hose loose) • Fuel line pressure • Injector blockage • Oxygen sensor malfunction • Manifold absolute pressure sensor • Engine coolant temp. sensor
P0172	When the air-fuel ratio feedback is stable after engine warming up, the fuel trim is considerably in error on the LEAN side. (2 trip detection logic)	• Fuel line pressure • Injector blockage, leak • Oxygen sensor malfunction • Manifold absolute pressure sensor • Engine coolant temp. sensor

HINT:

- When DTC P0171 is recorded, the actual air-fuel ratio is on the LEAN side. When DTC P0172 is recorded, the actual air-fuel ratio is on the RICH side.
- If the vehicle runs out of fuel, the air-fuel ratio is LEAN and DTC P0171 is recorded. The MIL then comes on.
- If the total of the short-term fuel trim value and long-term fuel trim value is within ± 25 %, the system is functioning normally.

INSPECTION PROCEDURE

1	**Check air induction system (See page SF-1).**

NG → **Repair or replace.**

OK ↓

2	**Check for oxygen sensor data.**

PREPARATION:

(a) Connect the OBD II scan tool or TOYOTA hand-held tester to the DLC3.

(b) Warm up engine to normal operating temperature.

CHECK:

Read the oxygen sensor output voltage and short-term fuel trim.

HINT:

Read the values for the same bank.

RESULT:

Pattern	Oxygen sensor output voltage	Short-term fuel trim
1	Lean condition (Changes at 0.55 V or less)	Changes at about + 20 %
2	Rich condition (Changes at 0.4 V or more)	Changes at about - 20 %
3	Except 1 and 2	

3	**Check for oxygen sensor (See page DI-151).**

1, 2

3	**Check fuel pressure (See page SF-6).**

NG	**Check and repair fuel pump, pressure regulator, fuel pipe line and filter (See page SF-6).**

OK

4	**Check injector injection (See page SF-22).**

NG	**Replace injector.**

OK

5	**Check manifold absolute pressure sensor and engine coolant temp. sensor (See page SF-50, SF-54).**

NG → **Repair or replace.**

OK

6	**Check for spark and ignition (See page IG-1).**

NG → **Repair or replace.**

OK

Check and replace ECM (See page IN-28).

DI50Y-01

DTC	P0171	System too Lean (Fuel Trim)

DTC	P0172	System too Rich (Fuel Trim)

CIRCUIT DESCRIPTION

”Fuel trim” refers to the feedback compensation value compared against the basic injection time. Fuel trim includes short-term fuel trim and long-term fuel trim.

”Short-term fuel trim” is the short-term fuel compensation used to maintain the air-fuel ratio at its ideal theoretical value. The signal from the oxygen sensor indicates whether the air-fuel ratio is RICH or LEAN compared to the ideal theoretical value, triggering a reduction in fuel volume if the air-fuel ratio is rich, and an increase in fuel volume if it is lean.

”Long-term fuel trim” is overall fuel compensation carried out long-term to compensate for continual deviation of the short-term fuel trim form the central value due to individual engine differences, wear over time and changes in the usage environment.

If both the short-term fuel trim and long-term fuel trim are LEAN or RICH beyond a certain value, it is detected as a malfunction and the MIL lights up.

DTC No.	DTC Detecting Condition	Trouble Area
P0171	When the air-fuel ratio feedback is stable after engine warming up, the fuel trim is considerably in error on the RICH side (2 trip detection logic)	• Air intake (hose loose) • Fuel line pressure • Injector blockage • Oxygen sensor malfunction • Manifold absolute pressure sensor • Engine coolant temp. sensor
P0172	When the air-fuel ratio feedback is stable after engine warming up, the fuel trim is considerably in error on the LEAN side. (2 trip detection logic)	• Fuel line pressure • Injector blockage, leak • Oxygen sensor malfunction • Manifold absolute pressure sensor • Engine coolant temp. sensor

HINT:

- When the DTC P0171 is recorded, the actual air-fuel ratio is on the LEAN side. When DTC P0172 is recorded, the actual air-fuel ratio is on the RICH side.
- If the vehicle runs out of fuel, the air-fuel ratio is LEAN and DTC P0171 is recorded. The MIL then comes on.
- If the total of the short-term fuel trim value and long-term fuel trim value is within ± 25 %, the system is functioning normally.

INSPECTION PROCEDURE

1	**Check air induction system (See page SF-1).**

NG → **Repair or replace.**

OK ↓

2	**Check for oxygen sensor data.**

PREPARATION:

(a) Connect the OBD II scan tool or TOYOTA hand-held tester to the DLC3.

(b) Warm up engine to normal operating temperature.

CHECK:

Read the oxygen sensor output voltage and short-term fuel trim.

HINT:

Read the values for the same bank.

RESULT:

Pattern	Oxygen sensor output voltage	Short-term fuel trim
1	Lean condition (Changes at 0.55 V or less)	Changes at about + 20 %
2	Rich condition (Changes at 0.4 V or more)	Changes at about - 20 %
3	Except 1 and 2	

3 → **Check for oxygen sensor (See page DI-43).**

1, 2 ↓

3	**Check fuel pressure (See page SF-5).**

NG → **Check and repair fuel pump, pressure regulator, fuel pipe line and filter. (See page SF-5).**

OK ↓

4	**Check injector injection (See page SF-21).**

NG → **Replace injector.**

OK ↓

5	**Check manifold absolute pressure sensor (SF-49) and engine coolant temp. sensor (See page SF-45).**

NG → **Repair or replace.**

OK

6	Check for spark and ignition (See page IG-1).

NG → Repair or replace.

OK

Check and replace ECM (See page IN-28).

DI521-02

DTC	P0300	Random/Multiple Cylinder Misfire Detected

DTC	P0301	Cylinder 1 Misfire Detected

DTC	P0302	Cylinder 2 Misfire Detected

DTC	P0303	Cylinder 3 Misfire Detected

DTC	P0304	Cylinder 4 Misfire Detected

CIRCUIT DESCRIPTION

Misfire: The ECM uses the crankshaft position sensor and camshaft position sensor to monitor changes in the crankshaft rotation for each cylinder.

The ECM counts the number of times the engine speed change rate indicates that misfire has occurred. And when the misfire rate equals or exceeds the count indicating that the engine condition has deteriorated, the MIL lights up.

If the misfire rate is high enough and the driving conditions will cause catalyst overheating, the MIL blinks when misfiring occurs.

DTC No.	DTC Detecting Condition	Trouble Area
P0300	Misfiring of random cylinders is detected during any particular 200 or 1,000 revolutions	• Ignition system • Injector • Fuel line pressure • EGR • Compression pressure • Valve clearance not to specification • Valve timing • Manifold absolute pressure sensor • Engine coolant temp. sensor
P0301 P0302 P0303 P0304	For any particular 200 revolutions for the engine, misfiring is detected which can cause catalyst overheating (This causes MIL to blink)	
	For any particular 1,000 revolutions of the engine, misfiring is detected which causes a deterioration in emissions (2 trip detection logic)	

HINT:

When the 2 or more codes for a misfiring cylinder are recorded repeatedly but no Random Misfire code is recorded, it indicates that the misfires were detected and recorded at different times.

WIRING DIAGRAM

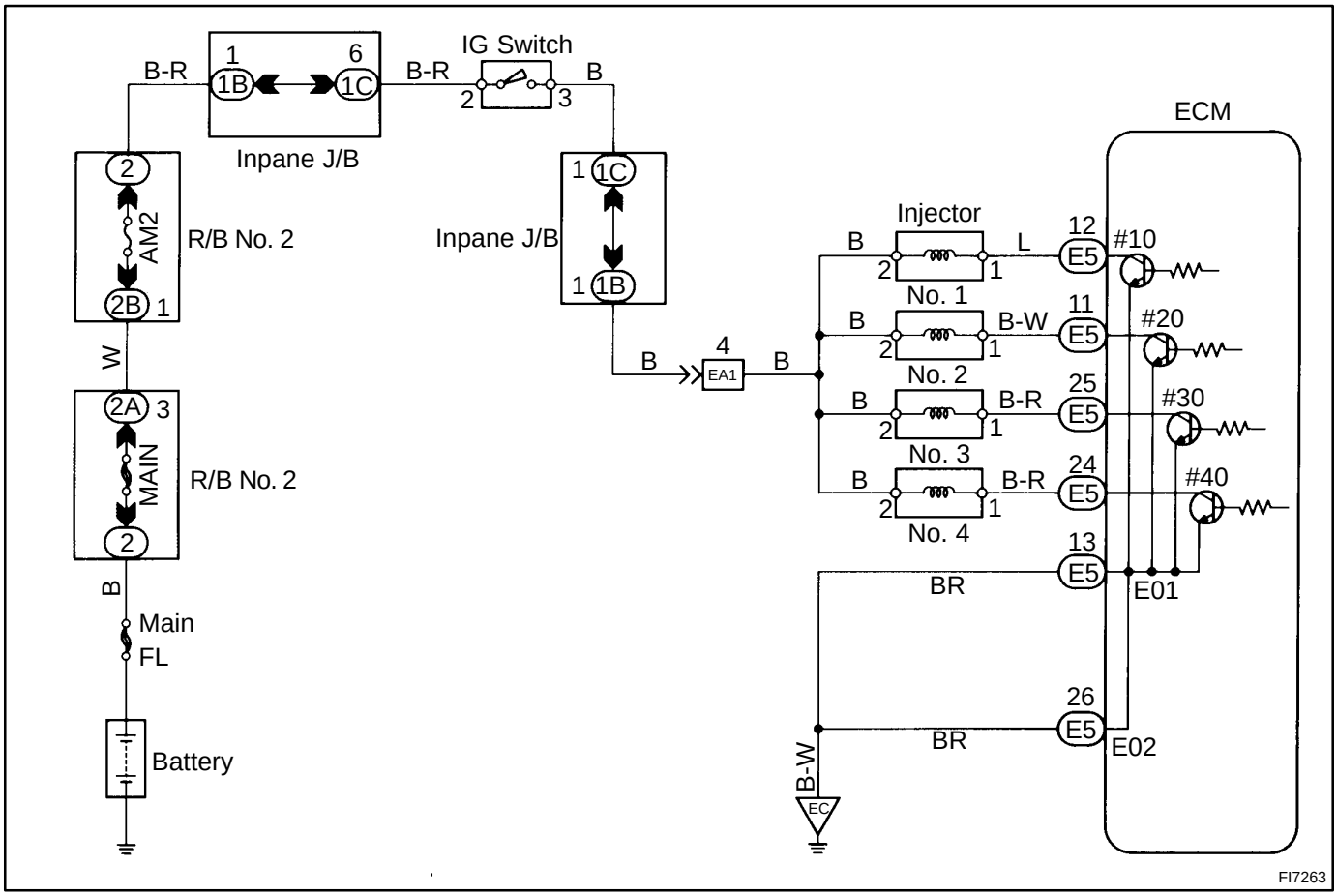

Reference: INSPECTION USING OSCILLOSCOPE

INJECTOR SIGNAL WAVEFORM

With the engine idling, measure between terminals #10, #20, #30, #40 and E01 of ECM.

HINT:

The correct waveform is as shown.

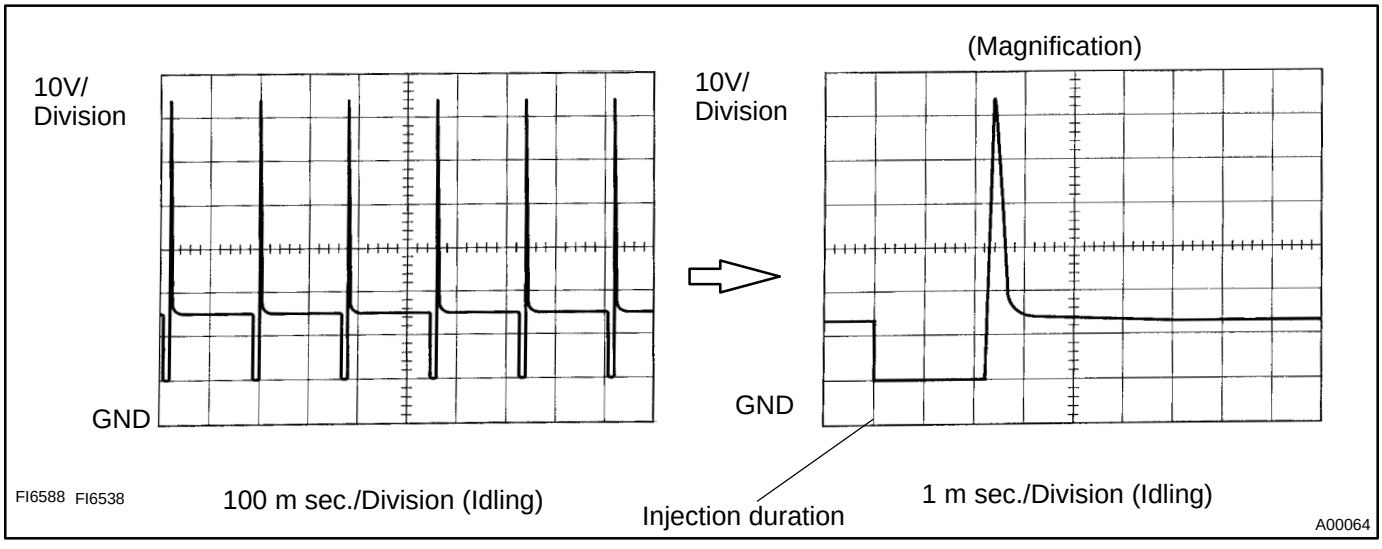

INSPECTION PROCEDURE

1	**Check spark plug and spark of misfiring cylinder.**

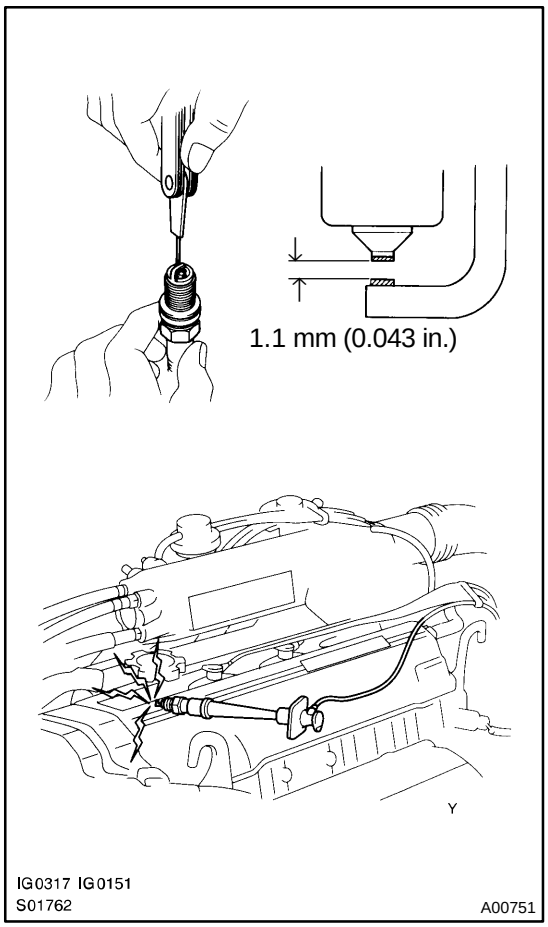

PREPARATION:

(a) Disconnect the high-tension cord from spark plug.
(b) Remove spark plug.

CHECK:

(a) Check the carbon deposits on electrode.
(b) Check electrode gap.

OK:

(a) No large carbon deposit present.
Not wet with gasoline or oil.
(b) Electrode gap: 1.1 - 1.3 mm (0.043 - 0.051 in.).

PREPARATION:

(a) Install the spark plug to the high-tension cord.
(b) Disconnect injector connector.
(c) Ground spark plug.

CHECK:

Check if spark occurs while engine is being cracked.

NOTICE:

To prevent excess fuel being injected from the injectors during this test, don't crank the engine for more than 5 - 10 seconds at a time.

OK:

Spark jumps across electrode gap.

NG → **Replace or check ignition system (See page IG-1).**

OK

2	Check voltage of ECM terminal for injector of failed cylinder.

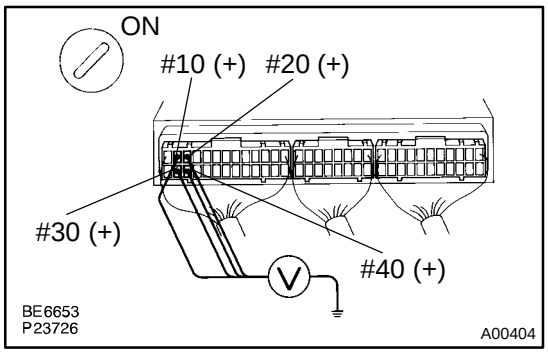

PREPARATION:

(a) Turn up the floor mat on the passenger side.

(b) Turn ignition switch ON.

CHECK:

Measure voltage between applicable terminal of ECM connector and body ground.

OK:

Voltage: 9 - 14 V

OK	Go to step 4.

NG

3	Check resistance of injector of misfiring cylinder (See page SF-22).

NG	Replace injector.

OK

Check for open and short in harness and connector between injector and ECM (See page IN-28).

4	Check fuel pressure (See page SF-6).

NG	Check and repair fuel pump, pressure regulator, fuel pipe line and filter (See page SF-6).

OK

5	Check injector injection (See page SF-22).

NG → Replace injector.

OK

6	Check EGR system (See page EC-11).

NG → Repair EGR system.

OK

7	Check manifold absolute pressure sensor and engine coolant temp. sensor (See page SF-50, SF-54).

NG → Repair or replace.

OK

Check the compression pressure (See page EM-3), valve clearance (See page EM-4) and valve timing (See page EM-13).

DI50Z-02

DTC	P0300	Random/Multiple Cylinder Misfire Detected

DTC	P0301	Cylinder 1 Misfire Detected

DTC	P0302	Cylinder 2 Misfire Detected

DTC	P0303	Cylinder 3 Misfire Detected

DTC	P0304	Cylinder 4 Misfire Detected

CIRCUIT DESCRIPTION

Misfire: The ECM uses the crankshaft position sensor and camshaft position sensor to monitor changes in the crankshaft rotation for each cylinder.

The ECM counts the number of times the engine speed change rate indicates that misfire has occurred. And when the misfire rate equals or exceeds the count indicating that the engine condition has deteriorated, the MIL lights up.

If the misfire rate is high enough and the driving conditions will cause catalyst overheating, the MIL blinks when misfiring occurs.

DTC No.	DTC Detecting Condition	Trouble Area
P0300	Misfiring of random cylinders is detected during any particular 200 or 1,000 revolutions	• Ignition system • Injector • Fuel line pressure • EGR • Compression pressure • Valve clearance not to specification • Valve timing • Manifold absolute pressure sensor • Engine coolant temp. sensor
P0301 P0302 P0303 P0304	For any particular 200 revolutions for the engine, misfiring is detected which can cause catalyst overheating (This causes MIL to blink)	
	For any particular 1,000 revolutions of the engine, misfiring is detected which causes a deterioration in emissions (2 trip detection logic)	

HINT:

When the 2 or more codes for a misfiring cylinder are recorded repeatedly but no Random Misfire code is recorded, it indicates that the misfires were detected and recorded at different times.

WIRING DIAGRAM

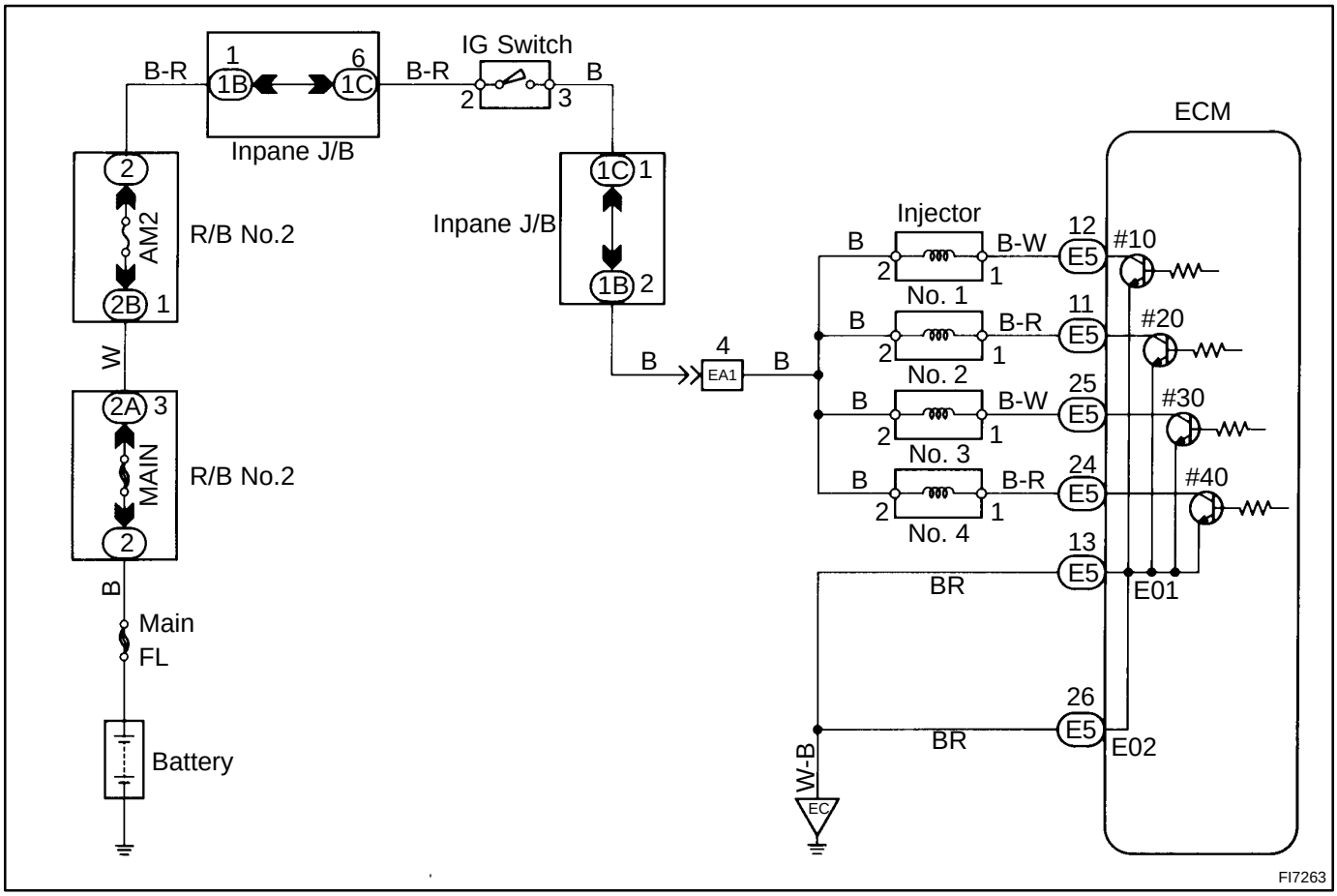

Reference: INSPECTION USING OSCILLOSCOPE

INJECTOR SIGNAL WAVEFORM

With the engine idling, measure between terminals #10, #20, #30, #40 and E01 of ECM.

HINT:

The correct waveform is as shown.

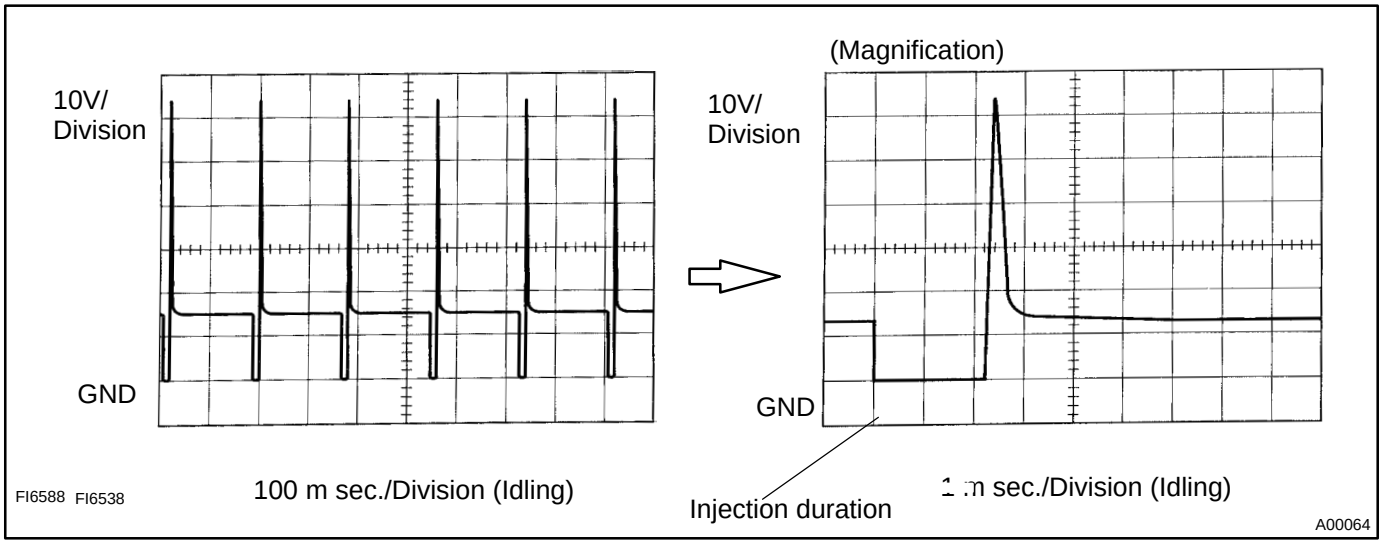

INSPECTION PROCEDURE

1	**Check spark plug and spark of misfiring cylinder.**

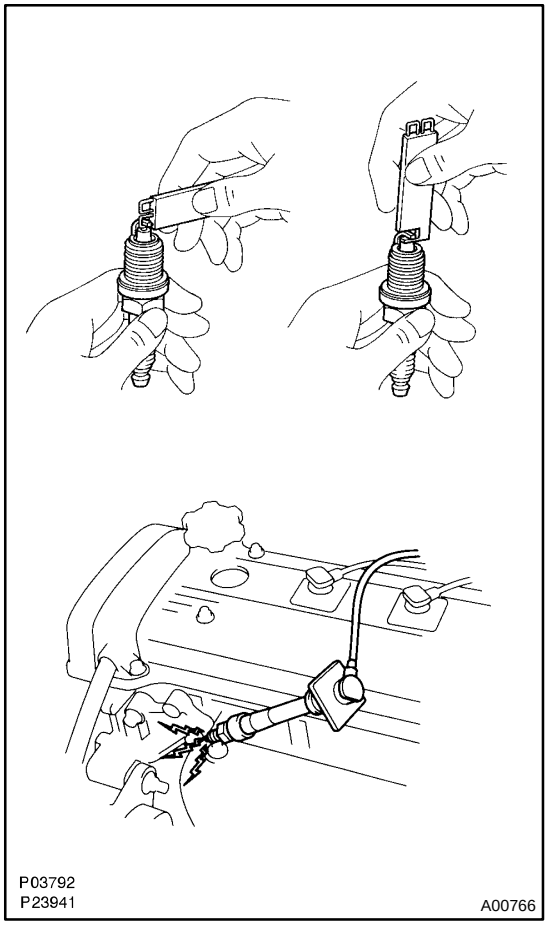

PREPARATION:

(a) Disconnect the high-tension cord.

(b) Remove spark plug.

CHECK:

(a) Check the carbon deposits on electrode.

(b) Check electrode gap.

OK:

(a) No large carbon deposit present.
Not wet with gasoline or oil.
(b) Electrode gap: 0.7 - 0.8 mm (0.028 - 0.031 in.).

PREPARATION:

(a) Install the spark plug to the high-tension code.

(b) Disconnect injector connector.

(c) Ground the spark plug.

CHECK:

Check if spark occurs while engine is being cracked.

NOTICE:

To prevent excess fuel being injected from the injectors during this test, don't crank the engine for more than 5 - 10 seconds at a time.

OK:

Spark jumps across electrode gap.

NG → **Replace or check ignition system (See page IG-1).**

OK

2	Check voltage of ECM terminal for injector of failed cylinder.

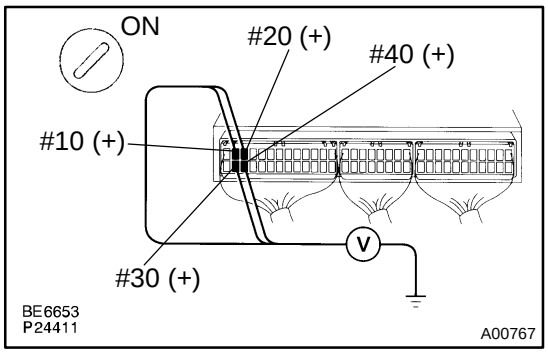

PREPARATION:

(a) Turn up the floor mat on the passenger side.

(b) Turn ignition switch ON.

CHECK:

Measure voltage between applicable terminal of ECM connector and body ground.

OK:

Voltage: 9 - 14 V

OK	Go to step 4.

NG

3	Check resistance of injector of misfiring cylinder (See page SF-17).

NG	Replace injector.

OK

Check for open and short in harness and connector between injector and ECM (See page IN-28).

4	Check fuel pressure (See page SF-5).

NG	Check and repair fuel pump, pressure regulator, fuel pipe line and filter (See page SF-5).

OK

5	**Check injector injection (See page SF-21).**

NG → **Replace injector.**

OK

6	**Check EGR system (See page EC-9).**

NG → **Repair EGR system.**

OK

7	**Check manifold absolute pressure sensor (SF-49) and engine coolant temp. sensor (See page SF-45).**

NG → **Repair or replace.**

OK

Check the compression pressure (See page EM-3), valve clearance (See page EM-4) and valve timing (See page EM-17).

DI522-01

DTC	P0325	Knock Sensor 1 Circuit Malfunction

CIRCUIT DESCRIPTION

A knock sensor is fitted to the cylinder block to detect engine knocking. This sensor contains a piezoelectric element which generates a voltage when it becomes deformed, which occurs when the cylinder block vibrates due to knocking. If engine knocking occurs, ignition timing is retarded to suppress it.

DTC No.	DTC Detecting Condition	Trouble Area
P0325	No knock sensor 1 signal to ECM with engine speed 1,200 rpm or more (2 trip detection logic)	• Open or short in knock sensor 1 circuit • Knock sensor 1 (looseness) • ECM

HINT:

If the ECM detects the above diagnosis conditions, it operates the fail safe function in which the corrective retard angle value is set to the maximum value.

WIRING DIAGRAM

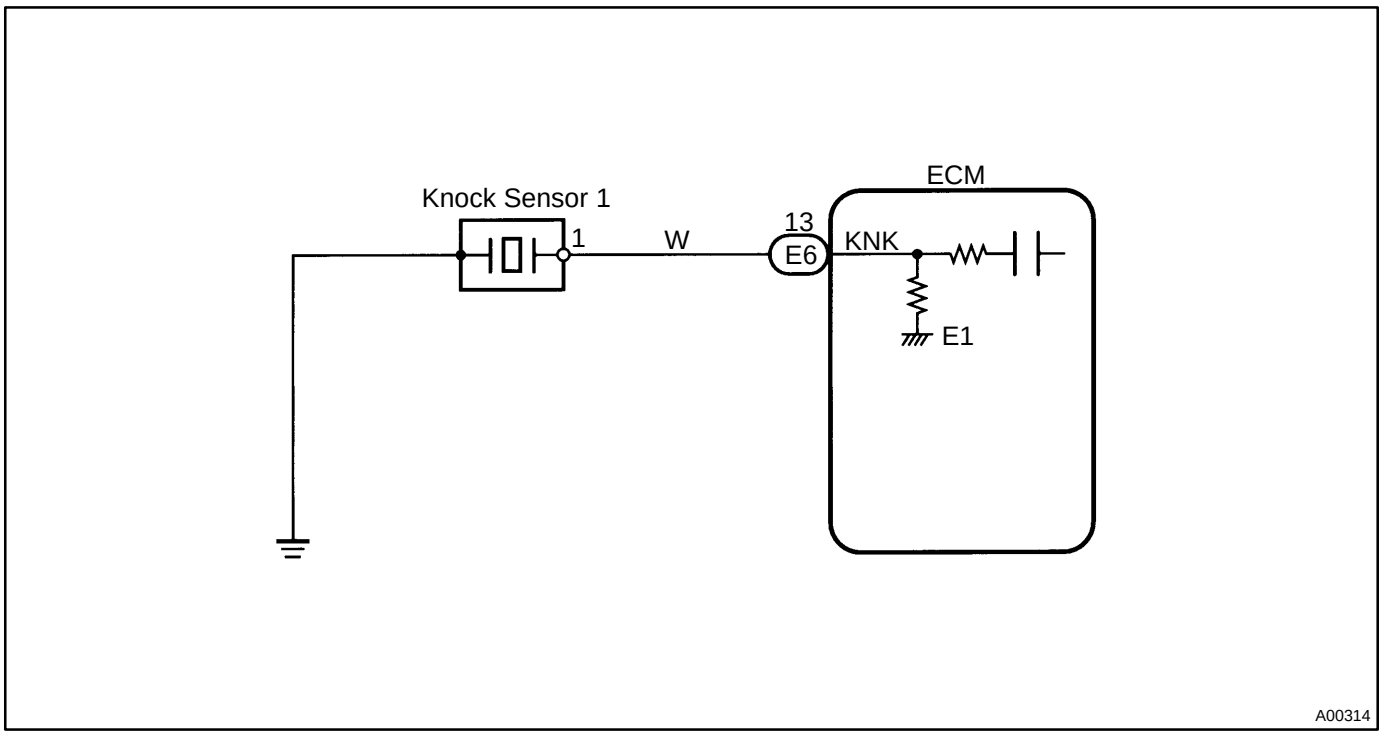

INSPECTION PROCEDURE

1	**Check continuity between terminal KNK of ECM connector and body ground.**

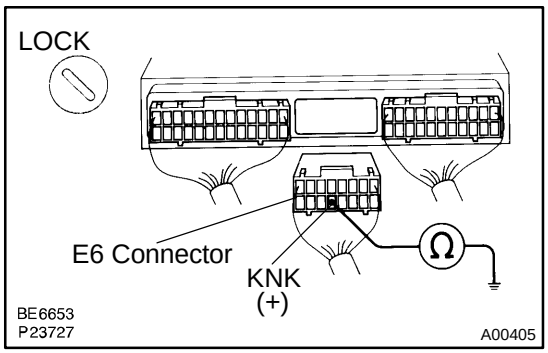

PREPARATION:

(a) Turn up the floor mat on the passenger side.

(b) Disconnect the "E6" connector of ECM.

CHECK:

Measure resistance between terminal KNK of ECM connector and body ground.

OK:

Resistance: 1 MΩ or higher

OK → **Go to step 3.**

NG

2	**Check knock sensor (See page SF-56).**

NG → **Replace knock sensor.**

OK

3	**Check for open and short in harness and connector between ECM and knock sensor (See page IN-28).**

NG → **Repair or replace harness or connector.**

OK

4	**Does malfunction disappear when a good knock sensor is installed?**

YES → **Replace knock sensor.**

NO

Check and replace ECM (See page IN-28).

Reference: INSPECTION USING OSCILLOSCOPE

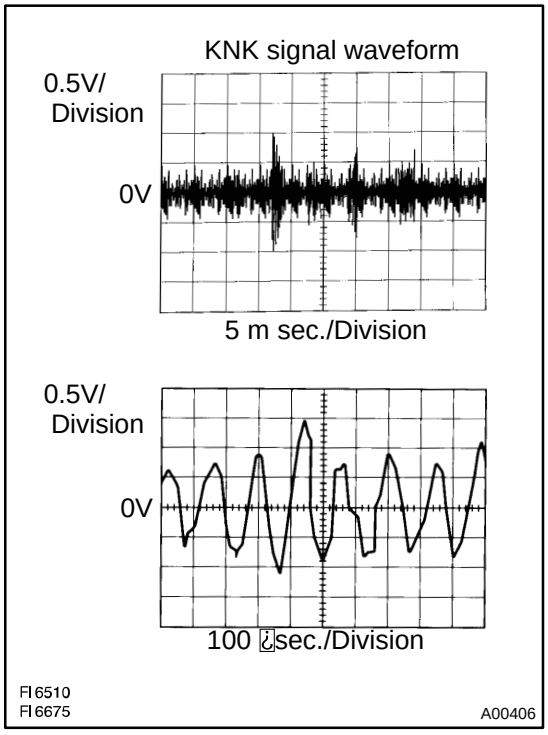

- With the engine racing (4,000 rpm) measure between terminal KNK of ECM and body ground.

HINT:
The correct waveform is as shown.

- Spread the time on the horizontal axis, and confirm that period of the wave is 132 µ sec.
  (Normal mode vibration frequency of knock sensor: 7.6 kHz)

HINT:
If normal mode vibration frequency is not 7.6 kHz, the sensor is malfunctioning.

DI510-01

DTC	P0325	Knock Sensor 1 Circuit Malfunction

CIRCUIT DESCRIPTION

The knock sensor is fitted to the cylinder block to detect engine knocking. This sensor contains a piezoelectric element which generates a voltage when it becomes deformed, which occurs when the cylinder block vibrates due to knocking. If engine knocking occurs, ignition timing is retarded to suppress it.

DTC No.	DTC Detecting Condition	Trouble Area
P0325	No knock sensor 1 signal to ECM with engine speed, 1,200 rpm or more (2 trip detection logic)	• Open or short in knock sensor 1 circuit • Knock sensor 1 (looseness) • ECM

If the ECM detects the above diagnosis conditions, it operates the fail safe function in which the corrective retard angle value is set to the maximum value.

WIRING DIAGRAM

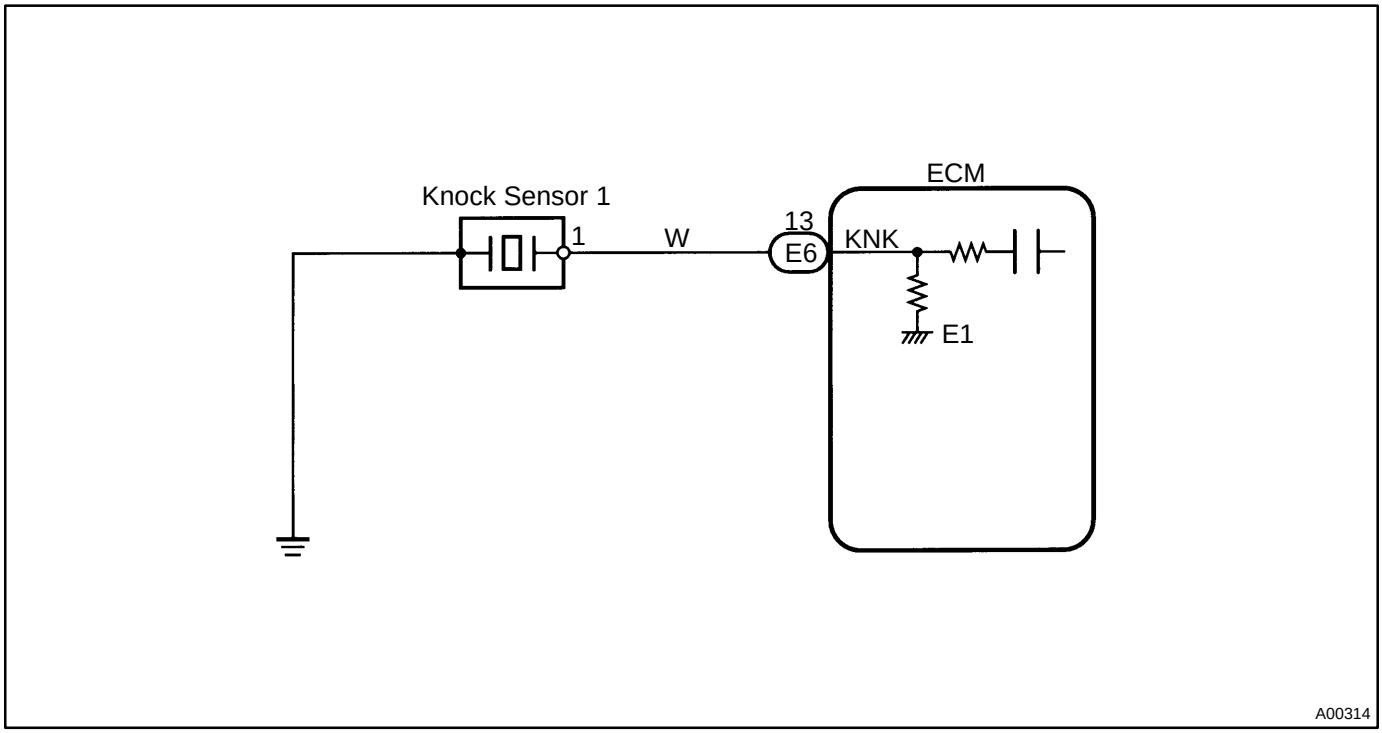

INSPECTION PROCEDURE

1	**Check continuity between terminal KNK of ECM connector and body ground.**

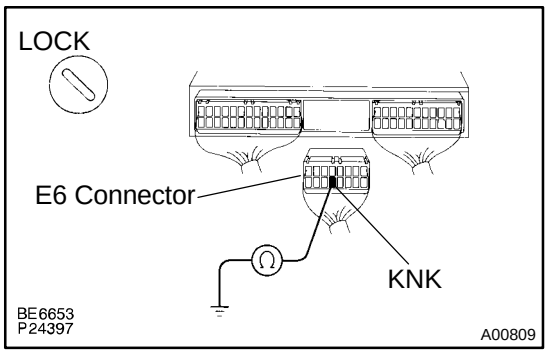

PREPARATION:

(a) Turn up the floor mat on the passenger side.

(b) Disconnect the "E6" connector of ECM.

CHECK:

Measure resistance between terminal KNK of ECM connector and body ground.

OK:

Resistance: 1 MΩ or higher

OK	**Go to step 3.**

NG

2	**Check knock sensor 1 (See page SF-50).**

NG	**Replace knock sensor.**

OK

3	**Check for open and short in harness and connector between ECM and knock sensor (See page IN-28).**

NG	**Repair or replace harness or connector.**

OK

4	**Does malfunction disappear when a good knock sensor is installed?¿**

YES → **Replace knock sensor,**

NO

Check and replace ECM (See page IN-28).

Reference: INSPECTION USING OSCILLOSCOPE

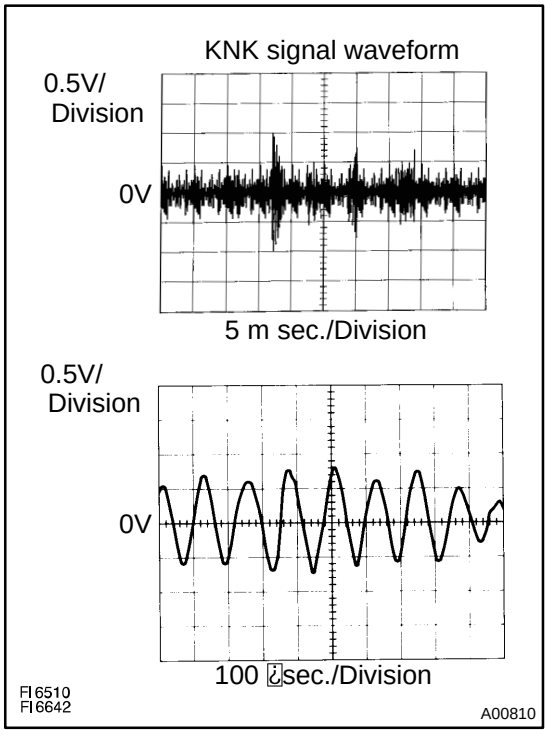

- With the engine racing (4,000 rpm) measure between terminal KNK of ECM and body ground.

HINT:
The correct waveform is as shown.

- Spread the time on the horizontal axis, and confirm that period of the wave is 123 μ sec.
  (Normal mode vibration frequency of knock sensor: 8.1 kHz)

HINT:
If normal mode vibration frequency is not 8.1 kHz, the sensor is malfunctioning.

DI523-02

DTC	P0335	Crankshaft Position Sensor ”A” Circuit Malfunction

CIRCUIT DESCRIPTION

Crankshaft position sensor (NE signal) consists of a signal plate and pickup coil.
The NE signal plate has 34 teeth and is mounted on the crankshaft. The NE signal sensor generates 34 signals for every engine revolution. The ECM detects the standard crankshaft angle based on the G signals, and the actual crankshaft angle and the engine speed by the NE signals.

DTC No.	DTC Detecting Condition	Trouble Area
P0335	No crankshaft position sensor signal to ECM during cranking (2 trip detection logic)	• Open or short in crankshaft position sensor circuit. • Crankshaft position sensor • Starter • ECM
	No crankshaft position sensor signal to ECM with engine speed 600 rpm or more (2 trip detection logic)	

WIRING DIAGRAM

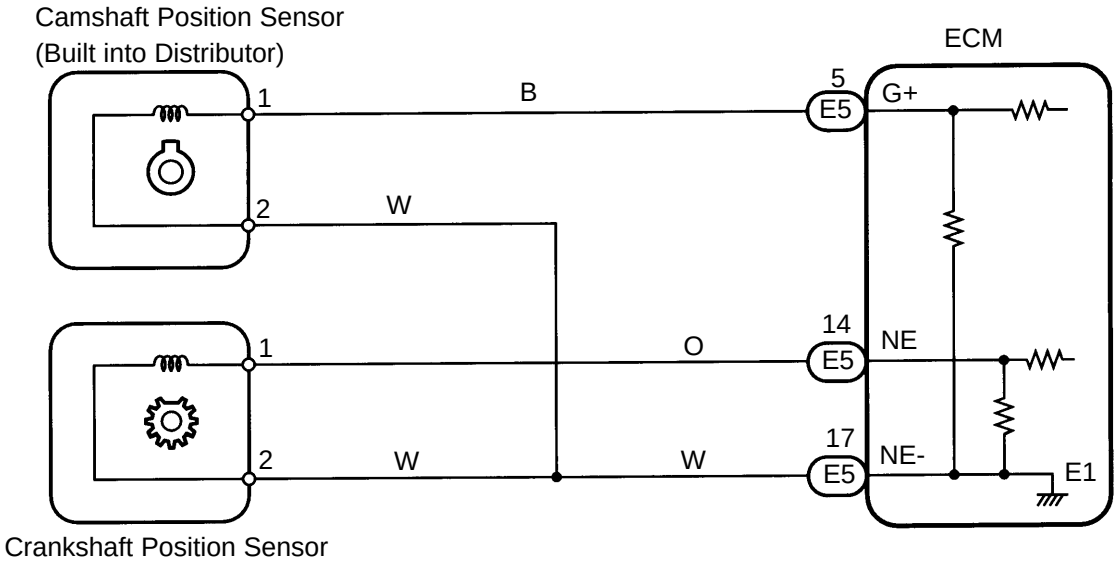

A00315

INSPECTION PROCEDURE

1	**Check resistance of crankshaft position sensor (See page IG-14).**

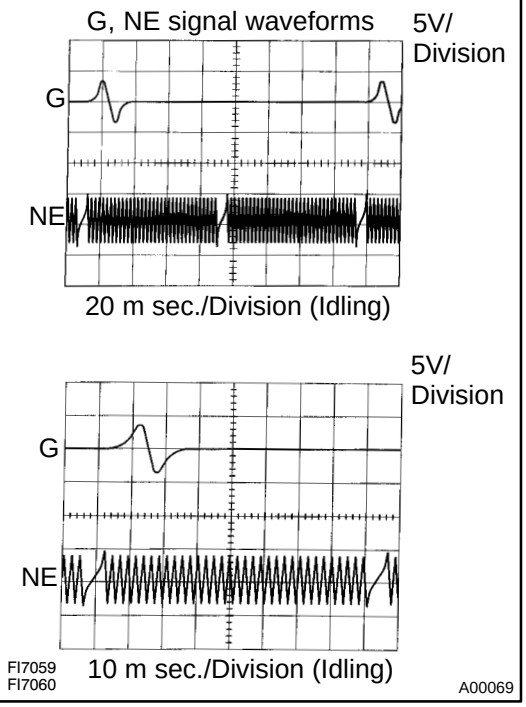

Reference: INSPECTION USING OSCILLOSCOPE

During cranking or idling, check between terminals G⊕ and NE⊖, NE and NE⊖ of ECM

HINT:

The correct waveforms are as shown.

NG → **Replace crankshaft position sensor.**

OK

2	**Check for open and short in harness and connector between ECM and crankshaft position sensor (See page IN-28).**

NG → **Repair or replace harness or connector.**

OK

3	**Inspect sensor installation and teeth of signal plate.**

NG → **Tighten the sensor.**
Replace signal plate.

OK

Check and replace ECM (See page IN-28).

DI511-02

DTC	P0335	Crankshaft Position Sensor ”A” Circuit Malfunction

CIRCUIT DESCRIPTION

Crankshaft position sensor (NE signal) consist of a signal plate and pick up coil.
The NE signal plate has 34 teeth and is mounted on the crankshaft. The NE signal sensor generates 34 signals of every engine revolution. The ECM detects the standard crankshaft angle based on the G signals, and the actual crankshaft angle the engine speed by the NE signals.

DTC No.	DTC Detecting Condition	Trouble Area
P0335	No crankshaft position sensor signal to ECM during cranking. (2 trip detection logic)	• Open or short in crankshaft position sensor circuit. • Crankshaft position sensor • Starter • ECM
	No crankshaft position sensor signal to ECM with engine speed 600 rpm or more (2 trip detection logic)	

WIRING DIAGRAM

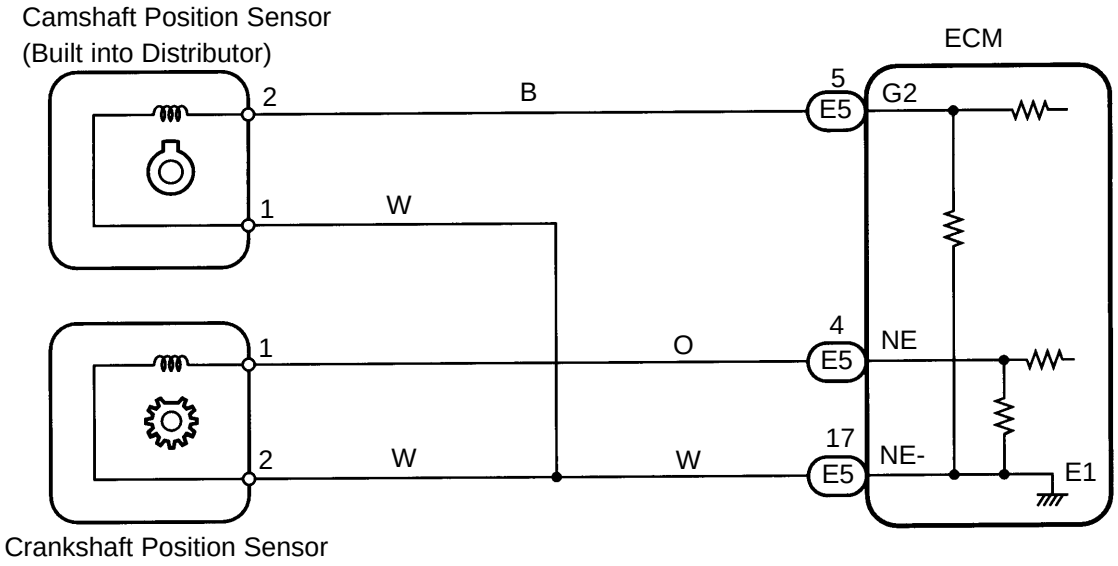

A00315

INSPECTION PROCEDURE

1	**Check resistance of crankshaft position sensor (See page IG-1).**

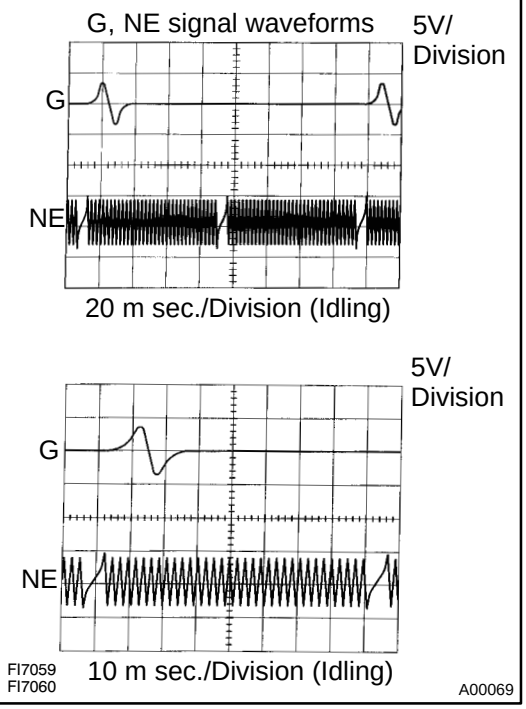

Reference: INSPECTION USING OSCILLOSCOPE

During cranking or idling, check between terminals G2 and NE⊖, NE⊕ and NE⊖ of ECM

HINT:

The correct waveforms are as shown.

NG → **Replace crankshaft position sensor (See page IG-13).**

OK

2	**Check for open and short in harness and connector between ECM and crankshaft position sensor (See page IN-28).**

NG → **Repair or replace harness or connector.**

OK

3	**Inspect sensor installation and teeth of signal plate.**

NG → **Tighten the sensor.**
Replace signal plate (See page IG-13).

OK

Check and replace ECM (See page IN-28).

DI524-01

DTC	P0340	Camshaft Position Sensor Circuit Malfunction

CIRCUIT DESCRIPTION

Camshaft position sensor (G signal) consist of a signal plate and pickup coil.
The G signal plate has one tooth on its outer circumference and is built into the distributor.
When the camshafts rotate, the protrusion on the signal plate and the air gap on the pickup coil change, causing fluctuations in the magnetic field and generating an electromotive force in the pickup coil.
The NE signal plate has 34 teeth and is mounted on the crankshaft. The NE signal sensor generates 34 signals for every engine revolution. The ECM detects the standard crankshaft angle based on the G signals and the actual crankshaft angle and the engine speed by the NE signals.

DTC No.	DTC Detecting Condition	Trouble Area
P0340	No camshaft position sensor signal to ECM during cranking. (2 trip detection logic)	• Open or short in camshaft position sensor circuit • Camshaft position sensor • Starter • ECM
	No camshaft position sensor signal to ECM with engine speed 600 rpm or more	

WIRING DIAGRAM

Refer to page DI-168 for the WIRING DIAGRAM.

INSPECTION PROCEDURE

1	**Check resistance of camshaft position sensor (signal generator) (See page IG-14).**

Reference: INSPECTION USING OSCILLOSCOPE
Refer to DI-168 for the OSCILLOSCOPE.

NG → **Replace camshaft position sensor.**

OK

2	**Check for open and short in harness and connector between ECM and camshaft position sensor (See page IN-28).**

NG → **Repair or replace harness or connector.**

OK

3	**Inspect sensor installation.**

NG → **Tighten the sensor.**

OK

Check and replace ECM (See page IN-28).

DI513-01

DTC	P0340	Camshaft Position Sensor Circuit Malfunction

CIRCUIT DESCRIPTION

Camshaft position sensor (G signal) consist of a signal plate and pickup coil.
The G signal plate has one tooth on its outer circumference and is built into the distributor.
When the camshafts rotate, the protrusion on the signal plate and the air gap on the pickup coil change, causing fluctuations in the magnetic field and generating an electromotive force in the pickup coil.
The NE signal plate has 34 teeth and is mounted on the crankshaft. The NE signal sensor generates 34 signals for every engine revolution. The ECM detects the standard crankshaft angle based on the G signals and the actual crankshaft angle and the engine speed by the NE signals.

DTC No.	DTC Detecting Condition	Trouble Area
P0340	No camshaft position sensor signal to ECM during cranking. (2 trip detection logic)	• Open or short in camshaft position sensor circuit • Camshaft position sensor • Starter • ECM
	No camshaft position sensor signal to ECM with engine speed 600 rpm or more	

WIRING DIAGRAM

Refer to page DI-61 for the WIRING DIAGRAM.

INSPECTION PROCEDURE

1	Check resistance of camshaft position sensor (Signal generator) (See page IG-1).

Reference: INSPECTION USING OSCILLOSCOPE
Refer to page DI-61 for the OSCILLOSCOPE.

NG → Replace distributor housing assembly.

OK

2	Check for open and short in harness and connector between ECM and camshaft position sensor (See page IN-28).

NG → Repair or replace harness or connector.

OK

3	**Check air gap (See page IG-13).**

NG → **Adjust air gap or replace distributor housing assembly (See page IG-13).**

OK →

Check and replace ECM (See page IN-28).

DI525-01

DTC	P0401	Exhaust Gas Recirculation Flow Insufficient Detected

CIRCUIT DESCRIPTION

The EGR system recirculates exhaust gas, which is controlled to the proper quantity to suit the driving conditions, into the intake air mixture to slow down combustion, reduce the combustion temperature and reduce NOx emissions. The amount of EGR is regulated by the EGR vacuum modulator according to the engine load.

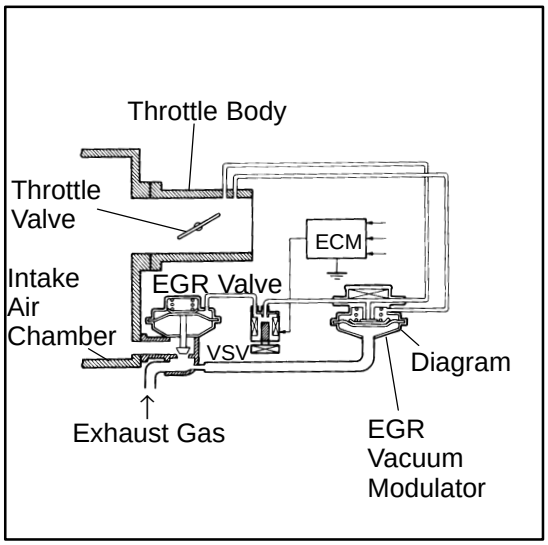

If even one of the following conditions is fulfilled, the VSV is turned ON by a signal from the ECM.
This results in atmospheric air acting on the EGR valve, closing the EGR valve and shutting off the exhaust gas (EGR cut-off).

- Under the following conditions, EGR is cut to maintain driveability.
- Before the engine is warmed up.
- During deceleration (throttle valve closed).
- Light engine load (amount of intake air very small).
- Engine idling.
- Engine speed over 4,400 rpm.
- High engine load (amount of intake air very large).

DTC No.	DTC Detecting Condition	Trouble Area
P0401	After the engine is warmed up, the intake manifold absolute pressure is larger than the value calculated by the ECM while the EGR system is ON. (2 trip detection logic)	• EGR valve stuck closed • Open or short in VSV circuit for EGR • Vacuum or EGR hose disconnected • Manifold absolute pressure sensor • EGR VSV open or close malfunction • ECM

WIRING DIAGRAM

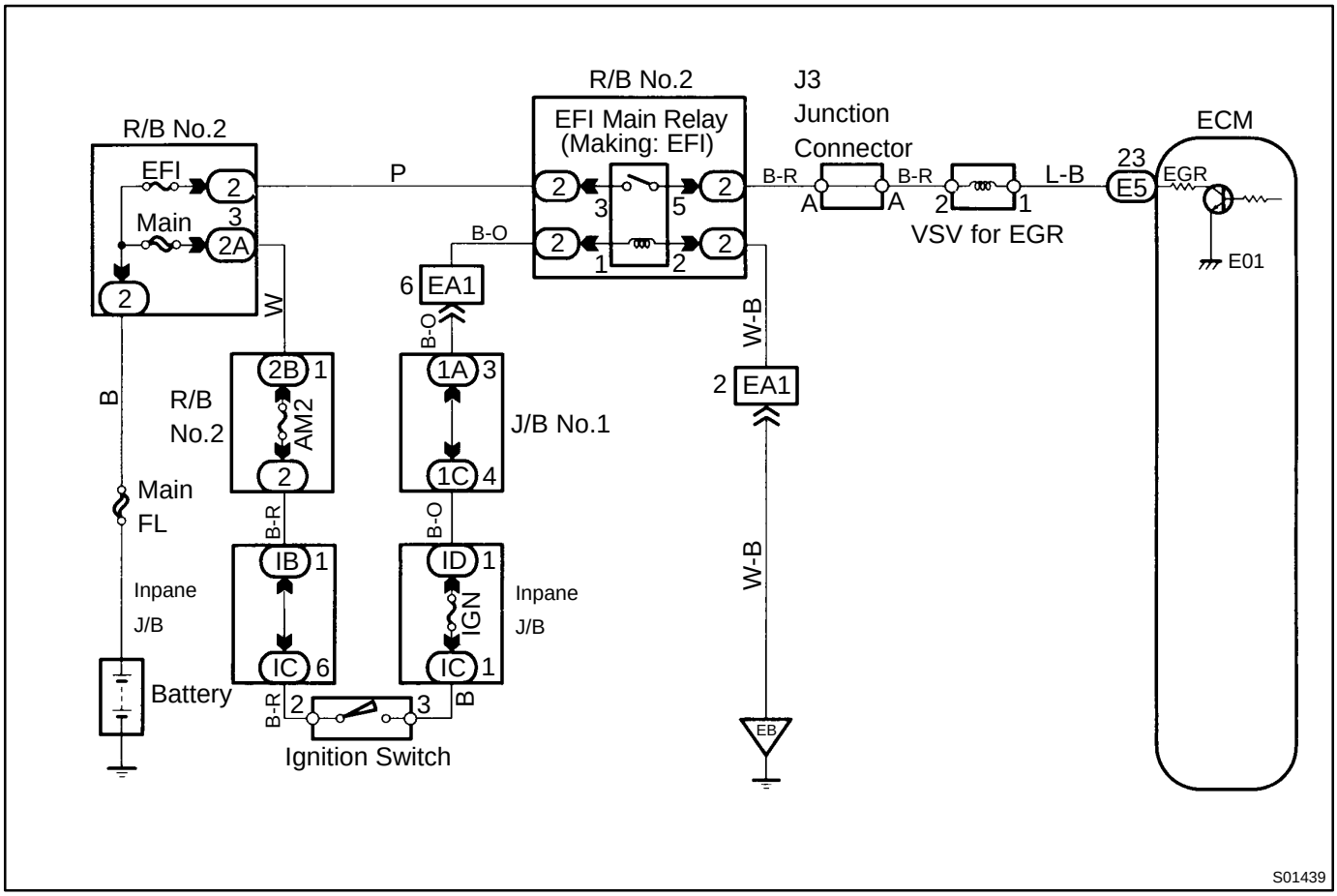

SYSTEM CHECK DRIVING PATTERN

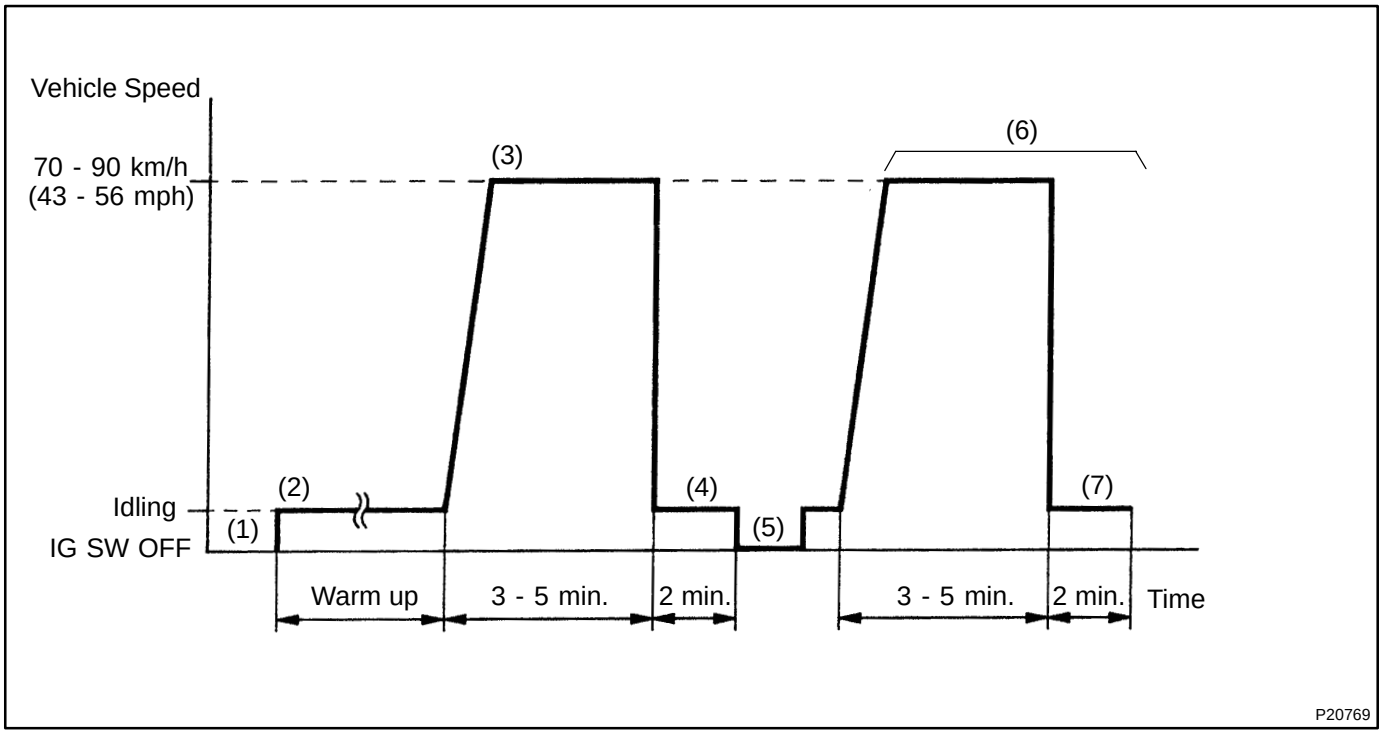

(1) Connect the OBD II scan tool or TOYOTA hand-held tester to the DLC3.
(2) Start and warm it up the engine with all accessories switched OFF.
(3) Run the vehicle at 70 - 90 km/h (43 - 56 mph) for 3 min. or more.
(4) Idle the engine for about 2 min.
(5) Stop at safe place and turn the ignition switch OFF.
(6) Start the engine and do steps (3) and (4) again.
(7) Check the "READINESS TESTS" mode on the OBD II scan tool or TOYOTA hand-held tester. If "COMPL" is displayed and the MIL does not light up, the system is normal. If "INCMPL" is displayed and the MIL does not light up, run the vehicle again and check it.

HINT:
"INCMPL" is displayed when either condition (a) or (b) exists.
(a) The system check is incomplete.
(b) There is a malfunction in the system.

If there is a malfunction in the system, the MIL will light up after steps (2) to (6) above are done.

INSPECTION PROCEDURE

HINT:

- If DTC "P0105" and/or "P0106" and "P0401" are output simultaneously, perform troubleshooting of DTC "P0105" first.
- If DTC "P0401" and "P0402" are output simultaneously, perform troubleshooting of DTC "P0402" first.

TOYOTA hand-held tester:

1	Check the connection of the vacuum hose, EGR hose (See page EC-11).

NG → Repair or replace.

OK

2	Check the VSV for EGR.

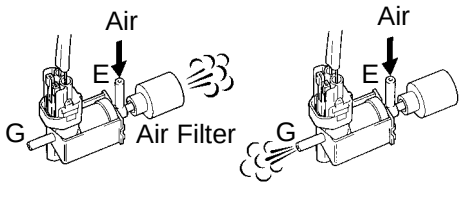

PREPARATION:
Select the ACTIVE TEST mode on the TOYOTA hand-held tester.

CHECK:
Check operation of VSV, When it is operated by the TOYOTA hand-held tester.

OK:

EGR system is OFF:
Air from pipe E is flowing out through the air filter.
EGR system is ON:
Air from pipe E is flowing out pipe G.

OK → Go to step 4.

NG

3	Check operation of the VSV for EGR (See page SF-48).

NG → Replace VSV for EGR.

OK

Check for open and short in harness and connector between engine room R/B and ECM (See page IN-28).

4	Check EGR vacuum modulator (See page EC-11).

NG → Repair or replace.

OK

5	Check EGR valve (See page EC-11).

NG → Repair or replace.

OK

6	Check manifold absolute pressure sensor (See page SF-54).

NG → Repair or replace.

OK

Check and replace ECM (See page IN-28).

OBD II scan tool (excluding TOYOTA hand-held tester):

1	**Check the connection of vacuum hose, EGR hose (See page EC-11).**

NG → **Repair or replace.**

OK

2	**Check the VSV for EGR.**

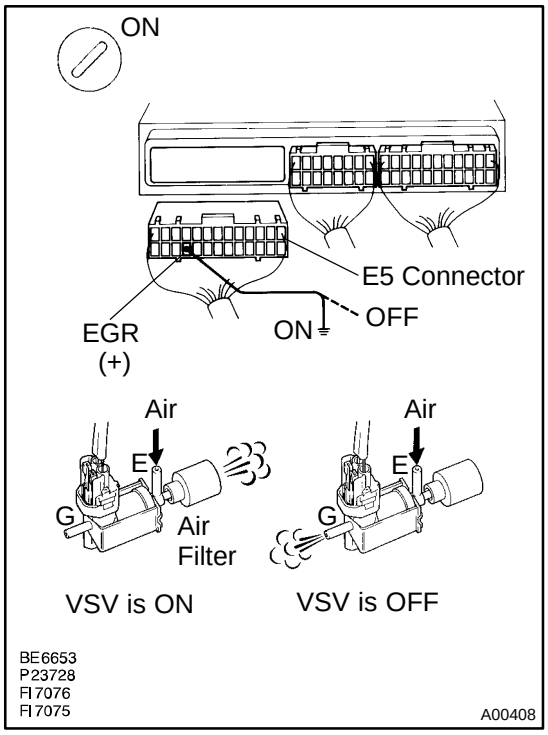

PREPARATION:

(a) Turn up the floor mat on the passenger side.
(b) Disconnect the "E5" connector of ECM.
(c) Turn ignition switch ON.

CHECK:

Check VSV function

(1) Connect between terminal EGR of ECM connector and body ground (ON).
(2) Disconnect between terminal EGR of ECM connector and body ground (OFF).

OK:

(1) VSV is ON:
Air from pipe E is flowing out through the air filter.
(2) VSV is OFF:
Air from pipe E is flowing out pipe G.

OK → **Go to step 4.**

NG

3	Check operation of the VSV for EGR (See page SF-48).

NG → Replace VSV for EGR.

OK

Check for open and short in harness and connector between engine room R/B and ECM (See page IN-28).

4	Check EGR vacuum modulator (See page EC-11).

NG → Repair or replace.

OK

5	Check EGR valve (See page EC-11).

NG → Repair or replace.

OK

6	Check manifold absolute pressure sensor (See page SF-54).

NG → Repair and replace.

OK

Check and replace ECM (See page IN-28).

DI514-02

DTC	P0401	Exhaust Gas Recirculation Flow Insufficient Detected

CIRCUIT DESCRIPTION

The EGR system recirculates exhaust gas, which is controlled to the proper quantity to suit the driving conditions, into the intake air mixture to slow down combustion, reduce the combustion temperature and reduce NOx emissions. The amount of EGR is regulated by the EGR vacuum modulator according to the engine load.

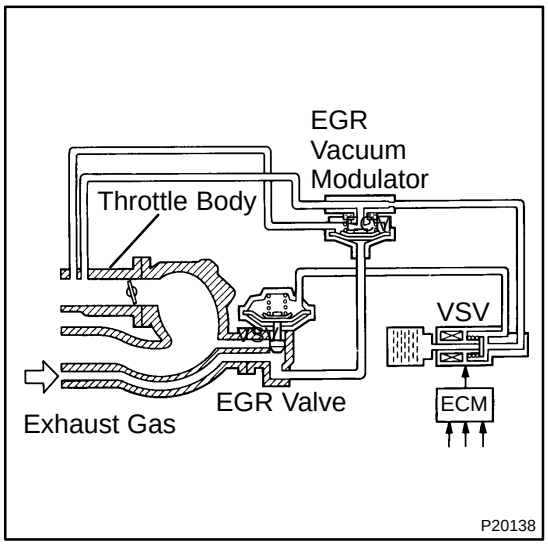

If even one of the following conditions is fulfilled, the VSV is turned OFF by a signal from the ECM.
This results in atmospheric air acting on the EGR valve, closing the EGR valve and shutting off the exhaust gas (EGR cut-off). Under the following conditions, EGR is cut to maintain driveability.

- Before the engine is warmed up.
- During deceleration (throttle valve closed).
- Light engine load (amount of intake air very small).
- Engine speed over 4,400 rpm.
- Engine racing.

DTC No.	DTC Detecting Condition	Trouble Area
P0401	After the engine is warmed up, the intake manifold absolute pressure is larger than the value calculated by the ECM while the EGR system is ON. (2 trip detection logic)	• EGR valve stuck closed • Open or short in VSV circuit for EGR • Vacuum or EGR hose disconnected • Manifold absolute pressure sensor • EGR VSV open or close malfunction • ECM

WIRING DIAGRAM

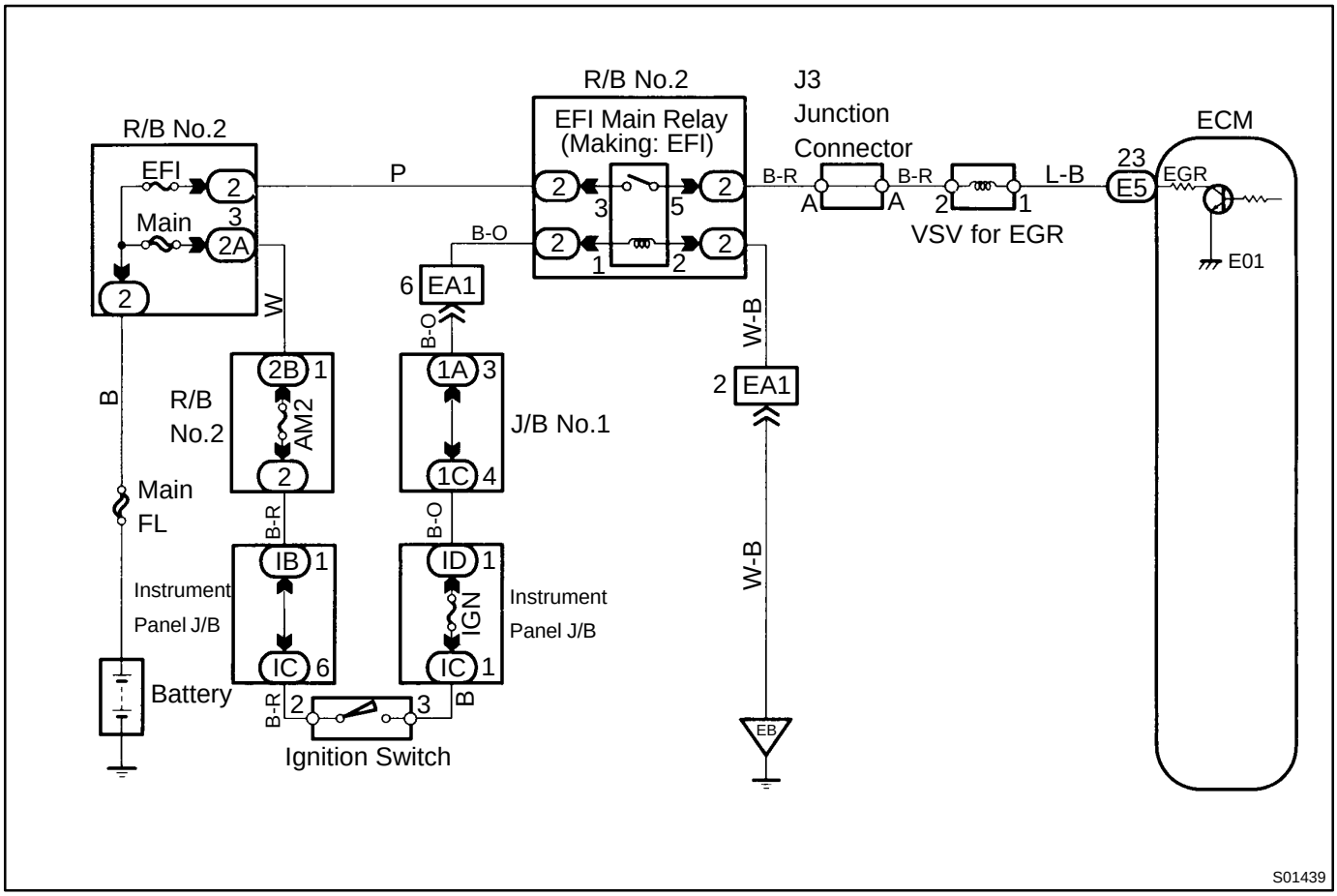

SYSTEM CHECK DRIVING PATTERN

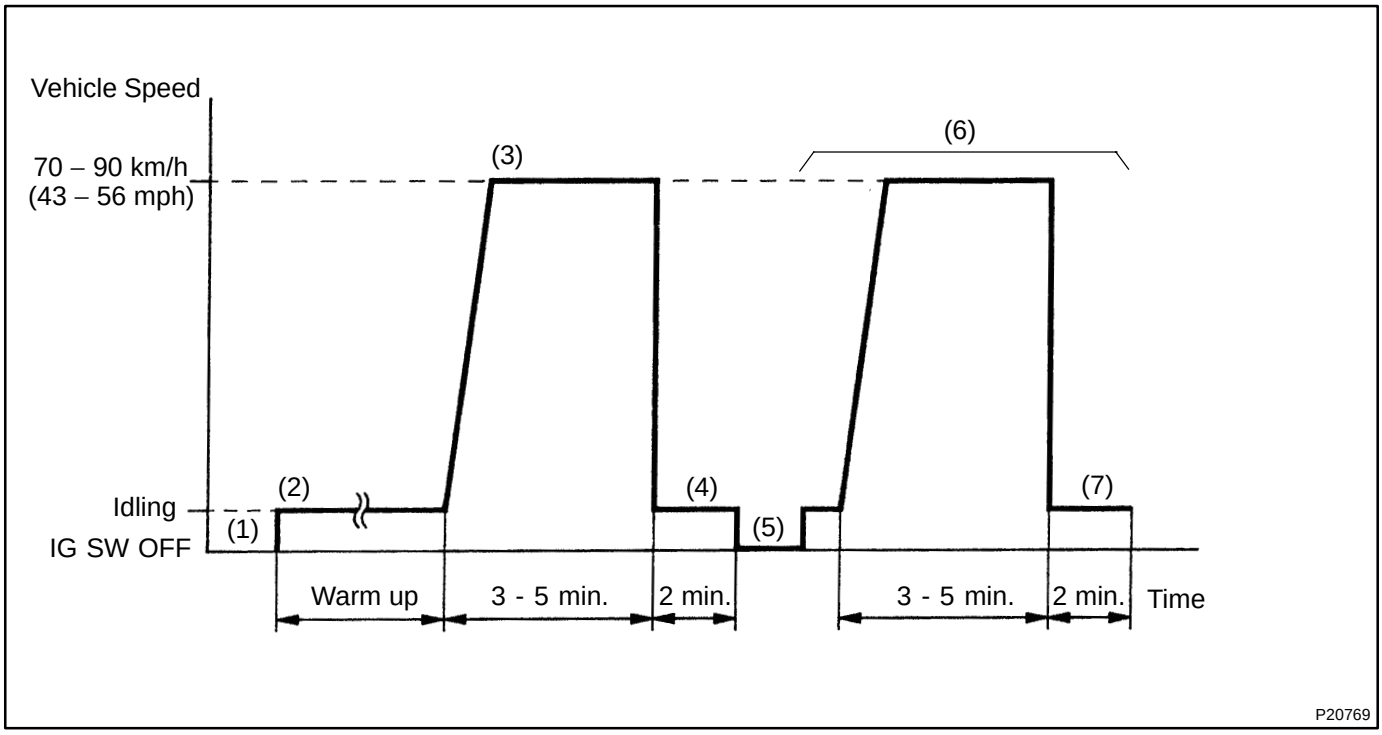

(1) Connect the OBD II scan tool or TOYOTA hand-held tester to the DLC3.
(2) Start and warm if up the engine with all accessories switched OFF.
(3) Run the vehicle at 70 - 90 km/h (43 - 56 mph) for 3 min. or more.
(4) Idle the engine for about 2 min.
(5) Stop at safe place and turn the ignition switch OFF.
(6) Start the engine and do steps (3) and (4) again.
(7) Check the ”READINESS TESTS” mode on the OBD II scan tool or TOYOTA hand-held tester. If ”COMPL” is displayed and the MIL does not light up, the system is normal. If ”INCMPL” is displayed and the MIL does not light up, run the vehicle again and check it.

HINT:

”INCMPL” is displayed when either condition (a) or (b) exists.

(a) The system check is incomplete.
(b) There is a malfunction in the system.

If there is a malfunction in the system, the MIL will light up after steps (2) to (6) above are done.

INSPECTION PROCEDURE

HINT:

- If DTC ”P0105” and/or ”P106” and P0401 are output simultaneously, perform troubleshooting of DTC P0105 first.
- If DTC ”P0401” and ”P0402” are output simultaneously, perform troubleshooting of DTC P0402 first.

INSPECTION PROCEDURE
TOYOTA hand-held tester:

1	**Check the connection of the vacuum hose, EGR hose (See page EC-9).**

NG → **Repair or replace.**

OK

2	**Check the VSV for EGR.**

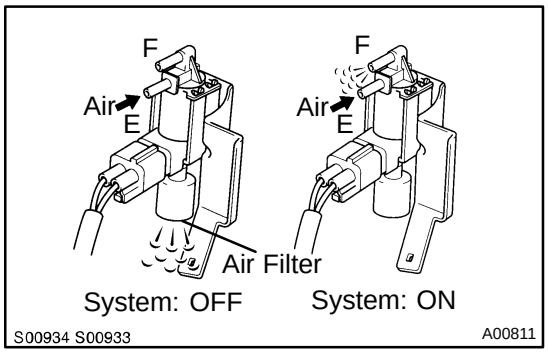

PREPARATION:

Select the ACTIVE TEST mode on the TOYOTA hand-held tester.

CHECK:

Check operation of VSV, When it is operated by the TOYOTA hand-held tester.

OK:

EGR system is OFF:
Air from pipe E is flowing out through the air filter.
EGR system is ON:
Air from pipe E is flowing out through pipe F.

OK → **Go to step 4.**

NG

3	**Check operation of the VSV for EGR (See page EC-9).**

NG → **Replace VSV for EGR.**

OK

Check for open and short in harness and connector between engine room R/B and ECM (See page IN-28).

4	Check EGR vacuum modulator (See page EC-9).

NG → Repair or replace.

OK

5	Check EGR valve (See page EC-9).

NG → Repair or replace.

OK

6	Check manifold absolute pressure sensor (See page SF-49).

NG → Repair or replace.

OK

Check and replace ECM (See page IN-28).

OBD II scan tool (excluding TOYOTA hand-held tester):

1	**Check the connection of vacuum hose, EGR hose (See page EC-9).**

NG → **Repair or replace.**

OK

2	**Check the VSV for EGR.**

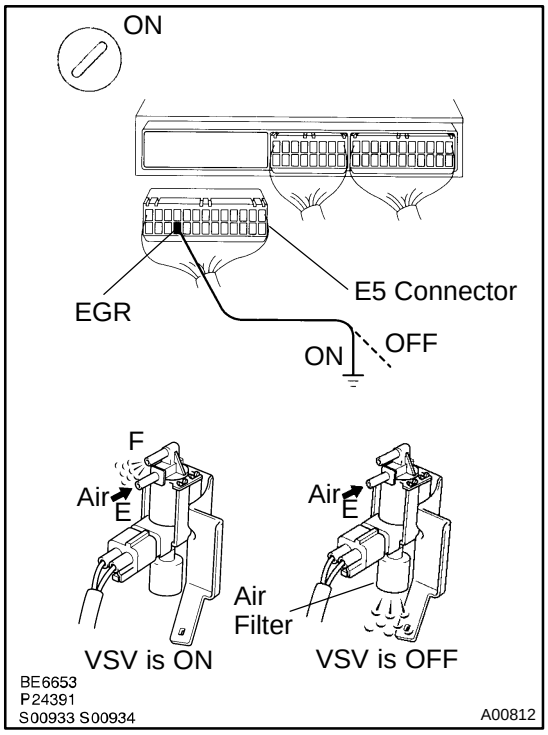

PREPARATION:

(a) Turn up the floor mat on the passenger side.
(b) Disconnect the "E5" connector of ECM.
(c) Turn ignition switch ON.

CHECK:

Check VSV function

(1) Connect between terminal EGR of ECM connector and body ground (ON).
(2) Disconnect between terminal EGR of ECM connector and body ground (ON).

OK:

(1) VSV is ON:
Air from pipe E is flowing out through pipe F.
(2) VSV is OFF:
Air from pipe E is flowing out through the air filter.

OK → **Go to step 4.**

NG

3	Check operation of the VSV for EGR (See page SF-44).

NG → Replace VSV for EGR.

OK

Check for open and short in harness and connector between engine room R/B and ECM (See page IN-28).

4	Check EGR vacuum modulator (See page EC-9).

NG → Repair or replace.

OK

5	Check EGR valve (See page EC-9).

NG → Repair or replace.

OK

6	Check manifold absolute pressure sensor (See page SF-49).

NG → Repair and replace.

OK

Check and replace ECM (See page IN-28).

DI526-01

DTC	P0402	Exhaust Gas Recirculation Flow Excessive Detected

CIRCUIT DESCRIPTION

Refer to Exhaust Gas Recirculation Flow Insufficient Detected on page DI-173 .

DTC No.	DTC Detecting Condition	Trouble Area
P0402	After the engine is warmed up, conditions (a) and (b) continue (a) The intake manifold absolute pressure is larger than the value calculated by the ECM while the EGR system is ON (b) Misfiring is detected during idling (2 trip detection logic)	• EGR valve stuck open • Vacuum or EGR hose is connected to wrong past • Manifold absolute pressure sensor • ECM

Refer to DTC P0401 for System Check Driving Pattern and Wiring Diagram.

INSPECTION PROCEDURE

HINT:

- If DTC ”P0105” and/or ”P0106” and ”P0402” are output simultaneously, perform troubleshooting of DTC ”P0105” first.
- If DTC ”P0401” and ”P0402” are output simultaneously, perform troubleshooting of DTC ”P0402” first.

1	**Check the Connection of the vacuum hose, EGR hose (See page EC-11).**

NG → **Repair or replace.**

OK

2	**Check EGR valve (See page EC-11).**

NG → **Repair or replace.**

OK

3	**Check the VSV for EGR*.**

*: If you have TOYOTA hand-held tester, see page DI-173 , step 2.
If you have no TOYOTA hand-held tester, see page DI-173 , step 2.

OK → **Go to step 5.**

NG

4	**Check operation of the VSV for EGR (See page SF-48).**

NG → **Replace VSV for EGR.**

OK

Check for open and short in harness and connector between engine room R/B and ECM (See page IN-28).

5	**Check EGR vacuum modulator (See page EC-11).**

NG → **Repair or replace.**

OK

6	**Check manifold absolute pressure sensor (See page SF-54).**

NG → **Repair or replace.**

OK

Check and replace ECM (See page IN-28).

DI515-01

DTC	P0402	Exhaust Gas Recirculation Flow Excessive Detected

CIRCUIT DESCRIPTION

Refer to Exhaust Gas Recirculation Flow Insufficient Detected on page DI-66 .

DTC No.	DTC Detecting Condition	Trouble Area
P0402	After the engine is warmed up, conditions (a) and (b) continue (a) The intake manifold absolute pressure is larger than the value calculated by the ECM while the EGR system is ON (b) Misfiring is detected during idling (2 trip detection logic)	• EGR valve stuck open • Vacuum or EGR hose is connected to wrong post • Manifold absolute pressure sensor • ECM

See DTC P0401 for System Check Driving Pattern and Wiring Diagram.

INSPECTION PROCEDURE

HINT:

- If DTC ”P0105” and/or ”P0106” and ”P0402” are output simultaneously, perform troubleshooting of DTC P0105 first.
- If DTC ”P0401” and ”P0402” are output simultaneously, perform troubleshooting of DTC ”P0402” first.

1	**Check the connection of the vacuum hose, EGR hose (See page EC-9).**

NG → **Repair or replace.**

OK

2	**Check EGR valve (See page EC-9).**

NG → **Repair or replace.**

OK

3	**Check the VSV for EGR*.**

*: If you have TOYOTA hand-held tester, see page DI-66 .
If you have no TOYOTA hand-held tester, see page DI-66 .

OK → **Go to step 5.**

NG

4	Check operation of the VSV for EGR (See page DI-66).

NG → Replace VSV for EGR.

OK

Check for open and short in harness and connector between engine room R/B and ECM (See page IN-28).

5	Check EGR vacuum modulator (See page EC-9).

NG → Repair or replace.

OK

6	Check manifold absolute pressure sensor (See page SF-49).

NG → Repair or replace.

OK

Check and replace ECM (See page IN-28).

DI527-01

DTC	P0420	Catalyst System Efficiency Below Threshold

CIRCUIT DESCRIPTION

The ECM compares the waveform of the oxygen sensor located before the catalyst with the waveform of the oxygen sensor located behind the catalyst to determine whether or not catalyst performance has deteriorated.

Air-fuel ratio feedback compensation keeps the waveform of the oxygen sensor before the catalyst repeatedly changing back and forth from rich to lean.

If the catalyst is functioning normally, the waveform of the oxygen sensor after the catalyst switches back and forth between rich and lean much more slowly than the waveform of the oxygen sensor before the catalyst.

But when both waveforms change at a similar rate, it indicates that catalyst performance has deteriorated.

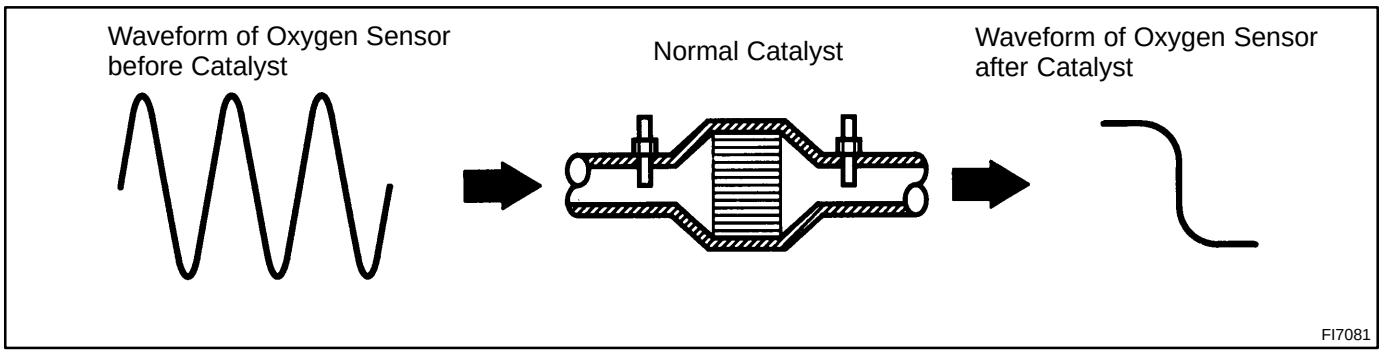

DTC No.	DTC Detecting Condition	Trouble Area
P0420	After the engine and the catalyst are warmed up, and while the vehicle is driven within the set vehicle and engine speed range, the waveforms of the oxygen sensors (bank 1 sensor 1 and bank 1 sensor 2) have the same amplitude (2 trip detection logic)	• Three-way catalytic converter • Open or short in oxygen sensor circuit • Oxygen sensor

CONFIRMATION ENGINE RACING PATTERN

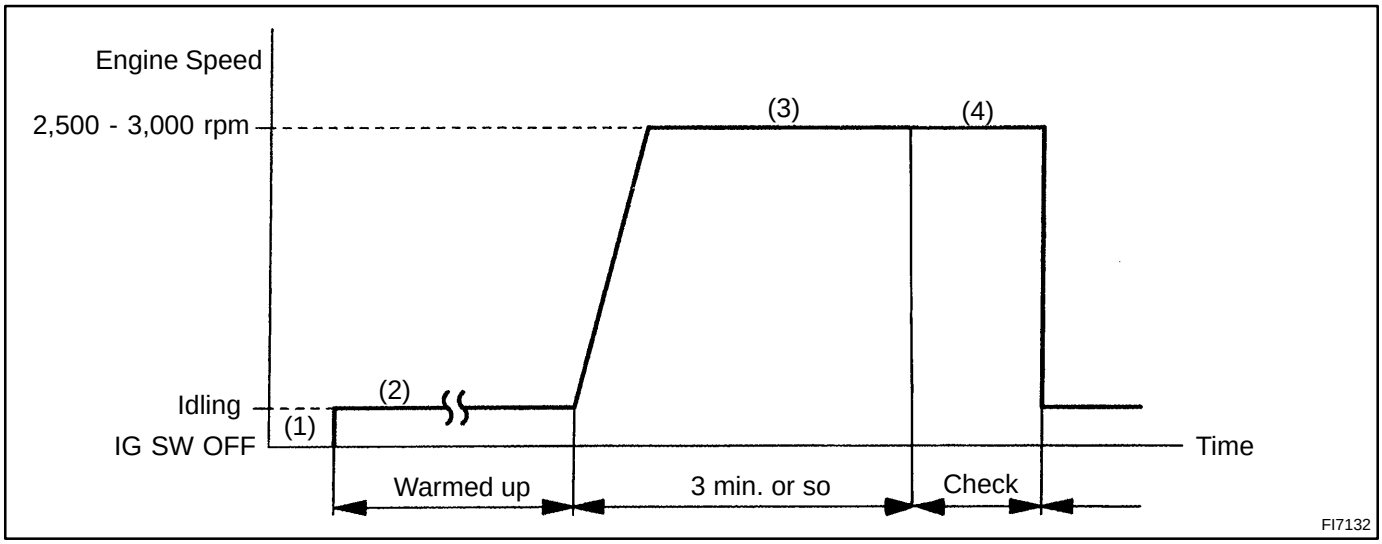

(1) Connect the TOYOTA hand-held tester to the DLC3, or connect the probe of the oscilloscope between terminals OX1, OX2 and E1 of ECM.
(2) Start engine and warm it up with all accessories switched OFF until water temparature is stable.
(3) Race the engine at 2,500 - 3,000 rpm for about 3 min.
(4) After confirming that the waveforms of the oxygen sensor, bank 1 sensor 1 (OX1), oscillate around 0.5 V during feedback to the ECM, check the waveform of the oxygen sensor, bank 1 sensor 2 (OX2).

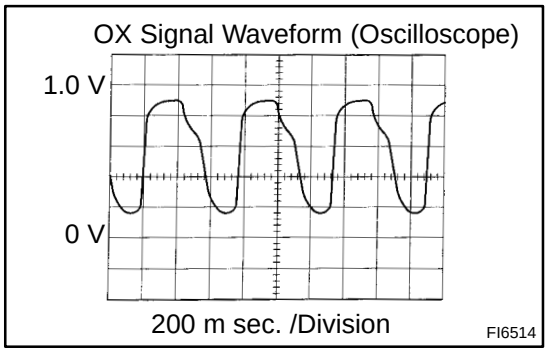

If there is a malfunction in the system, the waveform of the oxygen sensor, bank 1 sensor 2 (OX2), is almost the same as that of the oxygen sensors, bank 1 sensor 1 (OX1), on the left.
There are some cases where, even though a malfunction exists, the MIL may either light up or not light up.

INSPECTION PROCEDURE

1	Are there any other codes (besides DTC P0420) being output?

YES → Go to relevant DTC chart.

NO

2	Check oxygen sensor (bank 1 sensor 1) (See page DI-151).

NG → Repair or replace.

OK

3	Check oxygen sensor (bank 1 sensor 2) (See page DI-154).

NG → Repair or replace.

OK

Replace three-way catalytic converter.

DI516-01

DTC	P0420	Catalyst System Efficiency Below Threshold

CIRCUIT DESCRIPTION

The ECM compares the waveform of the oxygen sensor located before the catalyst with the waveform of the oxygen sensor located after the catalyst to determine whether or not catalyst performance has deteriorated.

Air-fuel ratio feedback compensation keeps the waveform of the oxygen sensor before the catalyst repeatedly changing back and forth from rich to lean.

If the catalyst is functioning normally, the waveform of the oxygen sensor behind the catalyst switches back and forth between rich and lean much more slowly than the waveform of the oxygen sensor before the catalyst.

But when both waveforms change at a similar rate, it indicates that catalyst performance has deteriorated.

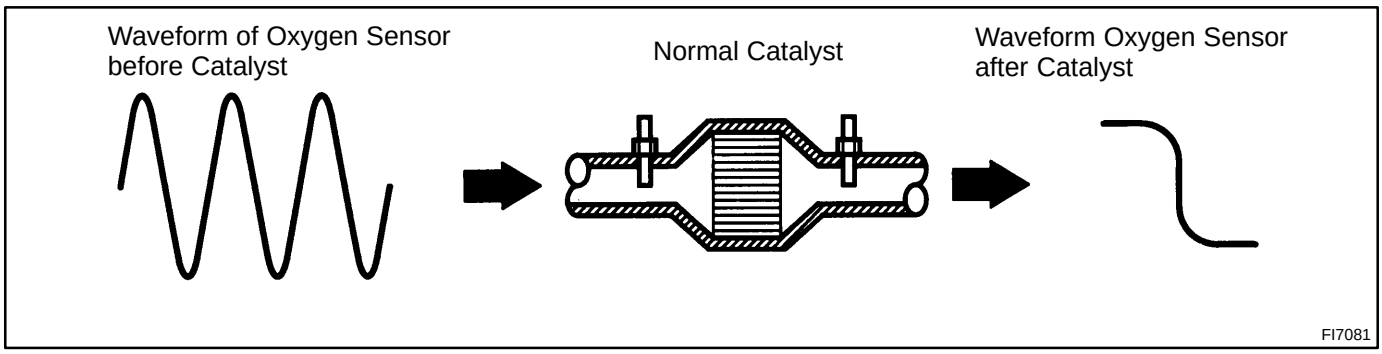

DTC No.	DTC Detecting Condition	Trouble Area
P0420	After the engine and the catalyst are warmed up, and while the vehicle is driven within the set vehicle and engine speed range, the waveforms of the oxygen sensors have the same amplitude (2 trip detection logic)	• Three-way catalytic converter • Open or short in oxygen sensor circuit • Oxygen sensor

CONFIRMATION ENGINE RACING PATTERN

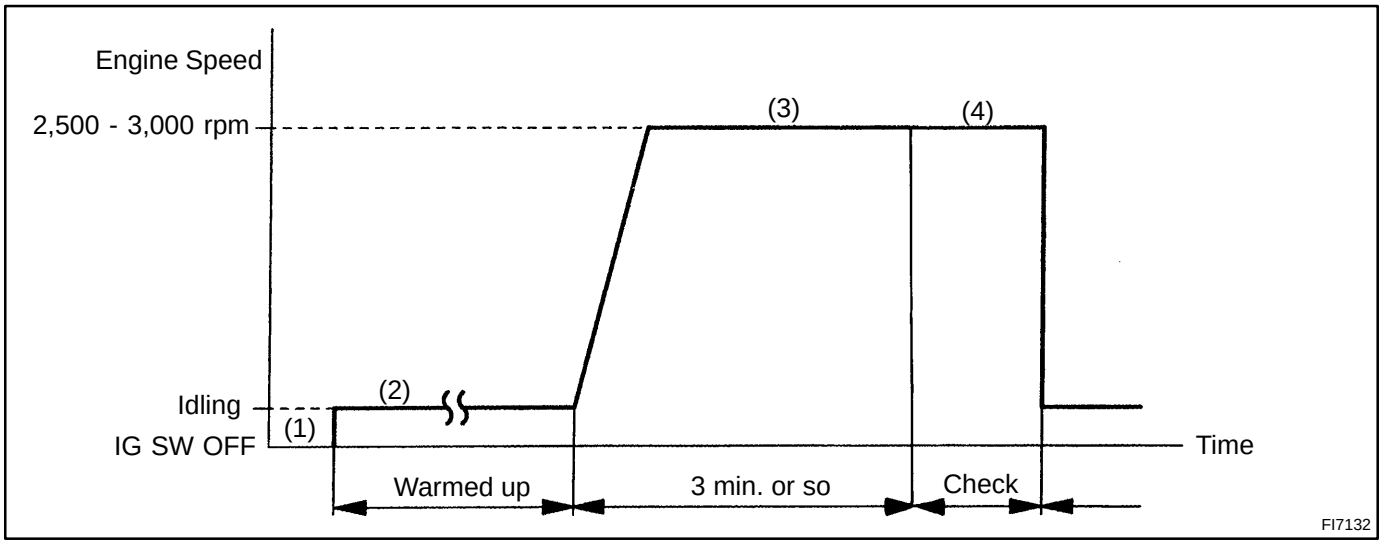

(1) Connect the TOYOTA hand-held tester to the DLC3, or connect the probe of the oscilloscope between terminals OX1, OX2 and E1 of ECM.
(2) Start engine and warm it up with all accessories switched OFF until water temperature is stable.
(3) Race the engine at 2,500 - 3,000 rpm for about 3 min.
(4) After confirming that the waveforms of the oxygen sensor, bank 1 sensor 1 (OX1), oscillate around 0.5 V during feedback to the ECM, check the waveform of the heated oxygen sensor, bank 1 sensor 2 (OX2).

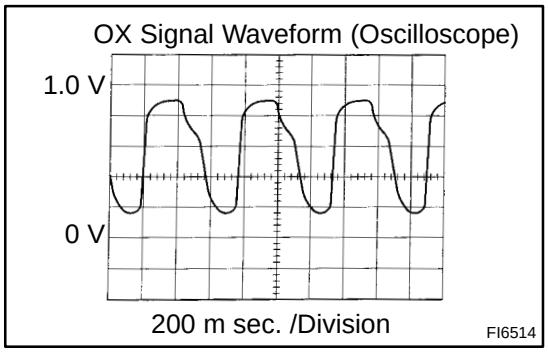

HINT:
If there is a malfunction in the system, the waveform of the heated oxygen sensor, bank 1 sensor 2 (OX2), is almost the same as that of the oxygen sensor, bank 1 sensor 1 (OX1), on the left.
There are some cases where, even though a malfunction exists, the MIL may either light up or not light up.

INSPECTION PROCEDURE

1	**Are there any other codes (besides DTC P0420) being output?**

YES → **Go to relevant DTC chart.**

NO

2	Check oxygen sensor (bank 1 sensor 1) (See page DI-40).

NG → Repair or replace.

OK

3	Check heated oxygen sensor (bank 1 sensor 2) (See page DI-40).

NG → Repair or replace.

OK

Replace three-way catalytic converter.

DI528-01

DTC	P0500	Vehicle Speed Sensor Malfunction

CIRCUIT DESCRIPTION

The No.1 vehicle speed sensor outputs a 4-pulse signal for every revolution of the rotor shaft, which is rotated by the transmission output shaft via the driven gear. After this signal is converted into a more precise rectangular waveform by the waveform shaping circuit inside the combination meter, it is then transmitted to the ECM. The ECM determines the vehicle speed based on the frequency of theses pulse signals.

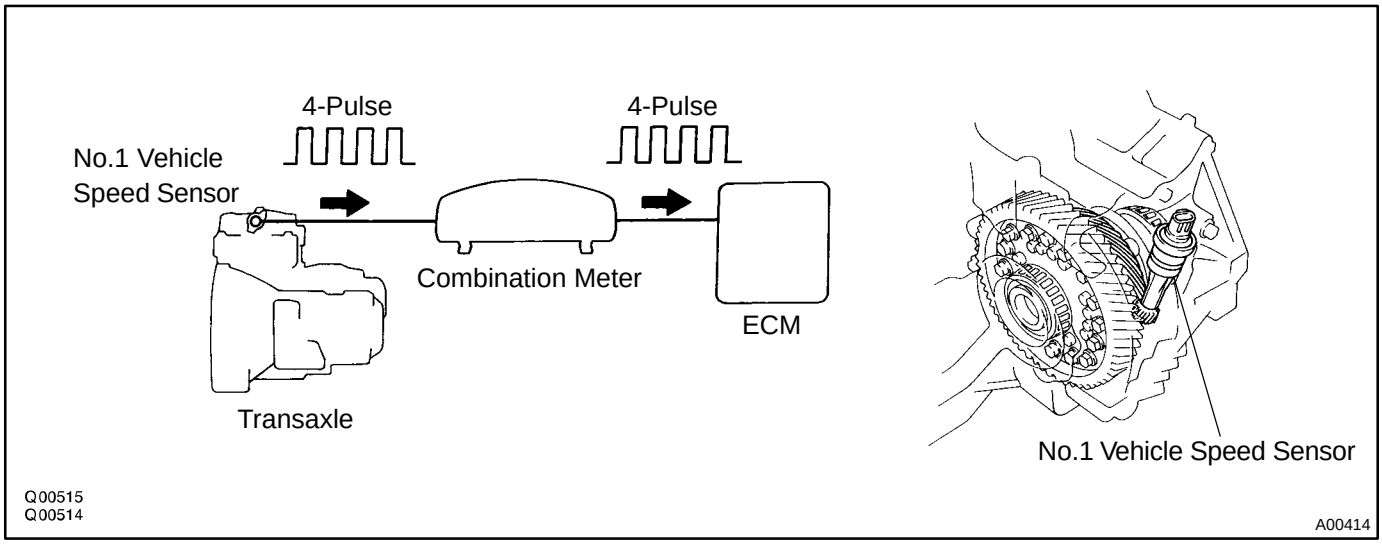

DTC No.	DTC Detecting Condition	Trouble Area
P0500	No vehicle speed sensor signal to ECM under condition (a) (2 trip detection logic) (a) Vehicle is being driven	• Combination meter • Open or short in speed sensor circuit • ECM • No.1 vehicle speed sensor

WIRING DIAGRAM

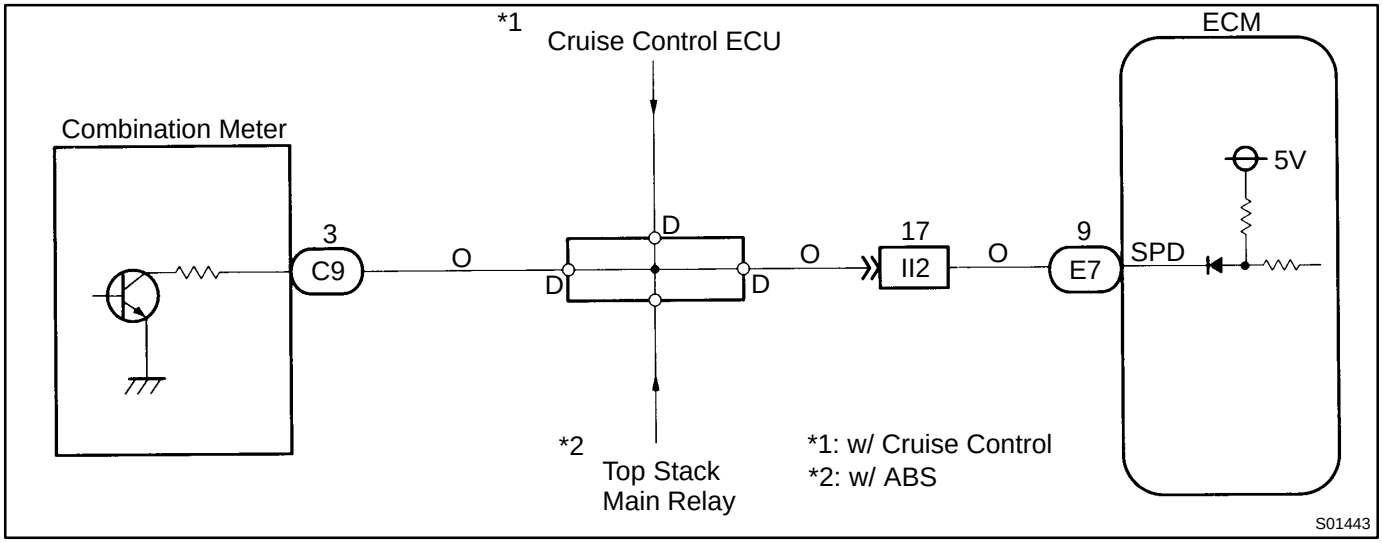

INSPECTION PROCEDURE

1	**Check operation of speedometer.**

CHECK:

Drive the vehicle and check if the operation of the speedmeter in the combination meter is normal.

HINT:

The vehicle speed sensor is operating normally if the speedometer display is normal.

NG → **Check speedometer circuit. See combination meter troubleshooting.**

OK

2	**Check voltage between terminal SPD of ECM connector and body ground.**

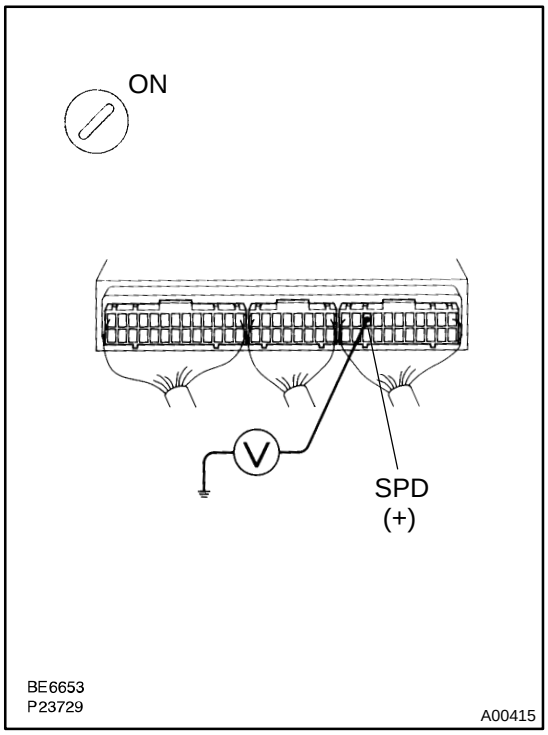

PREPARATION:

(a) Turn up the floor mat on the passenger side.
(b) Shift the shift lever to neutral.
(c) Jack up one of the front wheels.
(d) Turn ignition switch ON.

CHECK:

Measure voltage between terminal SPD of ECM connector and body ground when the wheel is turned slowly.

OK:

Voltage is generated intermittently.

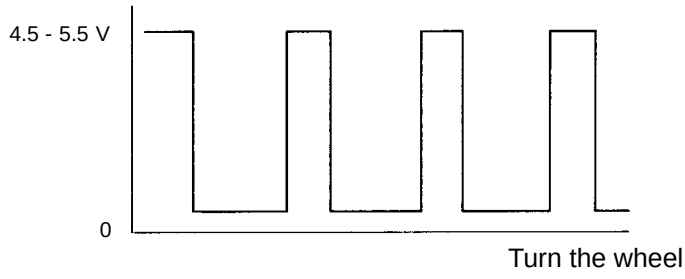

NG → **Check and repair harness and connector between combination meter and ECM.**

OK

Check and replace ECM (See page IN-28).

DI536-02

CIRCUIT INSPECTION

DTC	P0500	Vehicle Speed Sensor Malfunction

See page DI-78 .

DI517-01

DTC	P0500	Vehicle Speed Sensor Malfunction

CIRCUIT DESCRIPTION

The vehicle speed sensor outputs a 4-pulse signal for every revolution of the rotor shaft, which is rotated by the transmission output shaft via the driven gear. After this signal is converted into a more precise rectangular waveform by the waveform shaping circuit inside the combination meter, it is then transmitted to the ECM. The ECM determines the vehicle speed based on the frequency of these pluse signals.

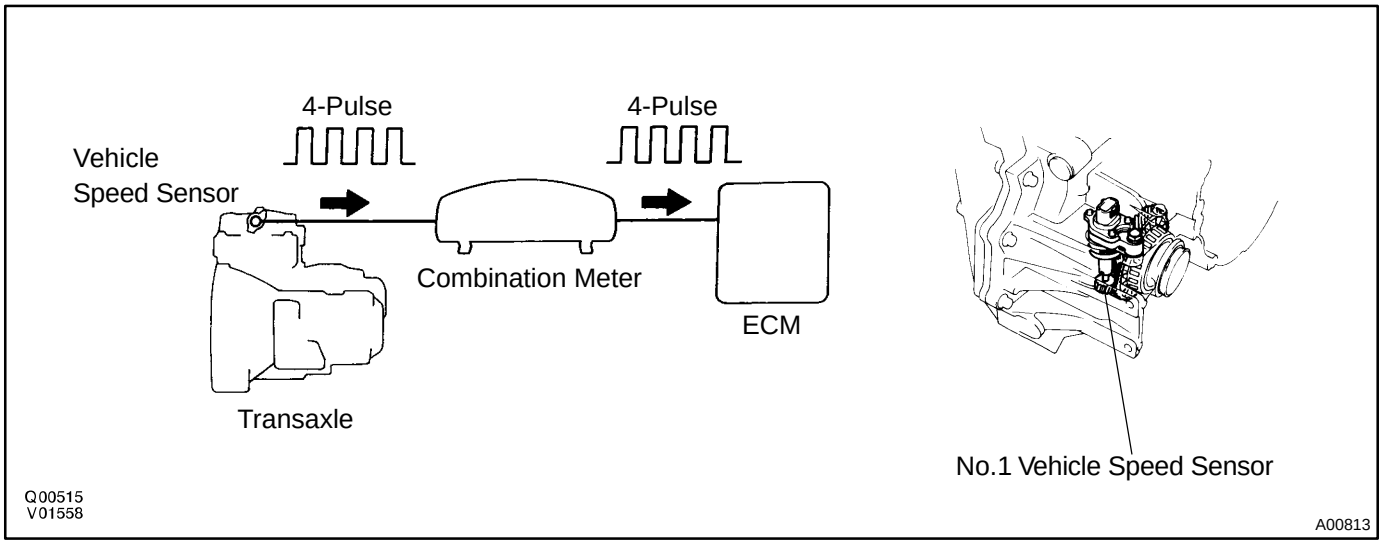

DTC No.	DTC Detecting Condition	Trouble Area
P0500	For M/T vehicle no vehicle speed sensor signal to ECM, when the vehicle is begine driven (2 trip detection logic) For A/T vehicles, no vehicle speed sensor signal to ECM under conditions (a) and (b): (a) Park/neutral position switch is OFF (b) Vehicle is being driven	• Combination meter • Open or short in vehicle speed sensor circuit • Vehicle speed sensor • ECM

WIRING DIAGRAM

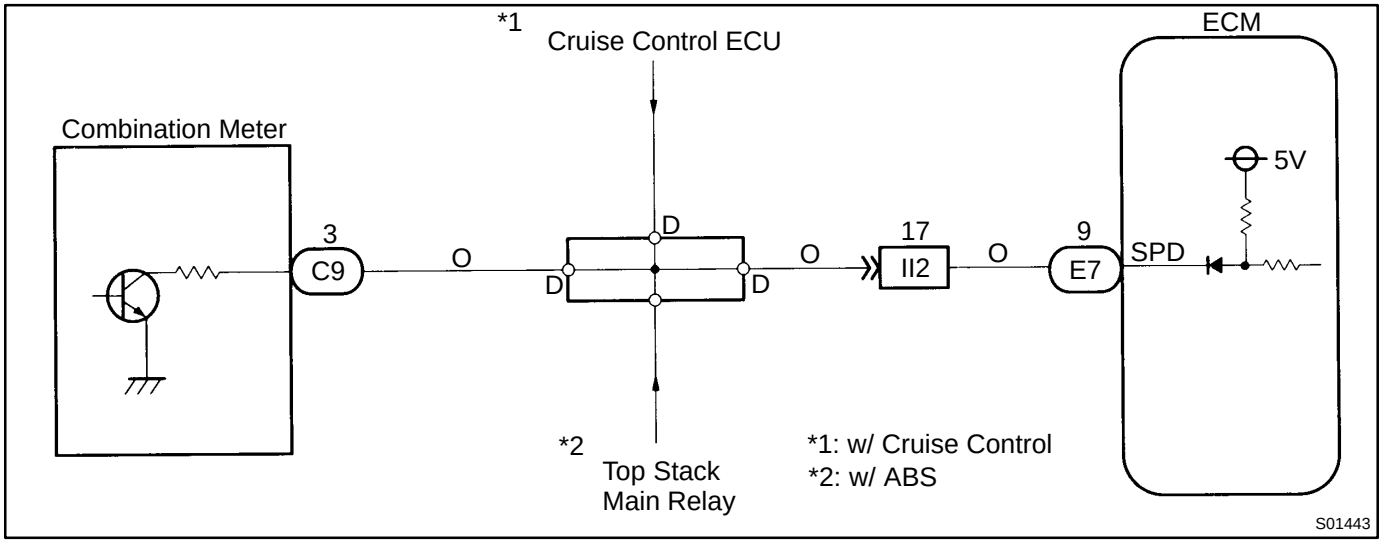

INSPECTION PROCEDURE

1	**Check operation of speedometer.**

CHECK:

Drive the vehicle and check if the operation of the speedmeter in the combination meter is normal.

HINT:

The vehicle speed sensor is operating normally if the speedometer display is normal.

NG → **Check speedometer circuit. See combination meter troubleshooting. (See page BE-2).**

OK

2	**Check voltage between terminal SPD of ECM connector and body ground.**

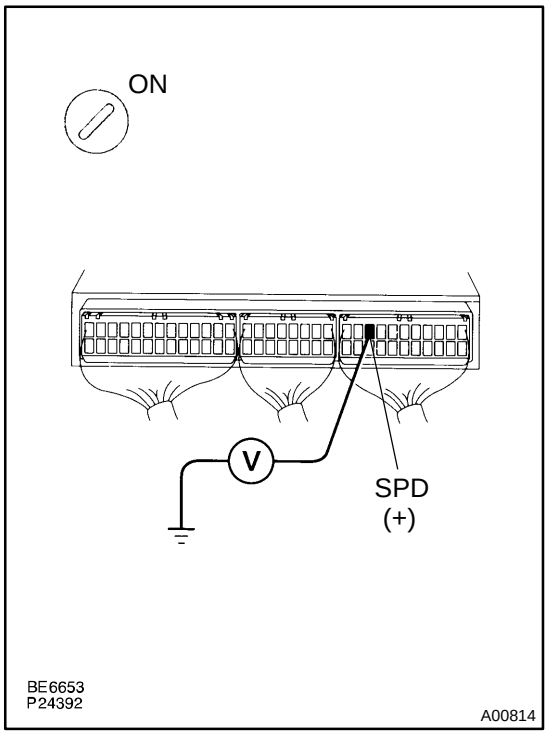

PREPARATION:

(a) Turn up the floor mat on the passenger side.
(b) Disconnect cruise control ECU connector.
(c) Shift the shift lever to N position or neutral.
(d) Jack up one of the front wheels.
(e) Turn ignition switch ON.

CHECK:

Measure voltage between terminal SPD of ECM connector and body ground when the wheel is turned slowly.

OK:

Voltage is generated intermittently.

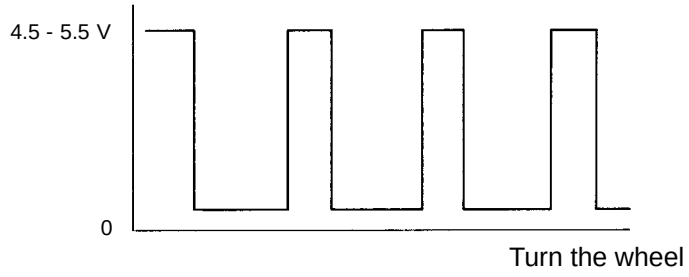

NG → **Check and repair harness and connector between combination meter and ECM.**

OK

Check and replace ECM (See page IN-28).

DI52Q-01

CIRCUIT INSPECTION

DTC	P0500	Vehicle Speed Sensor Malfunction (No.1 Vehicle Speed Sensor)

See page DI-185 .

DI529-02

DTC	P0505	Idle Control System Malfunction

CIRCUIT DESCRIPTION

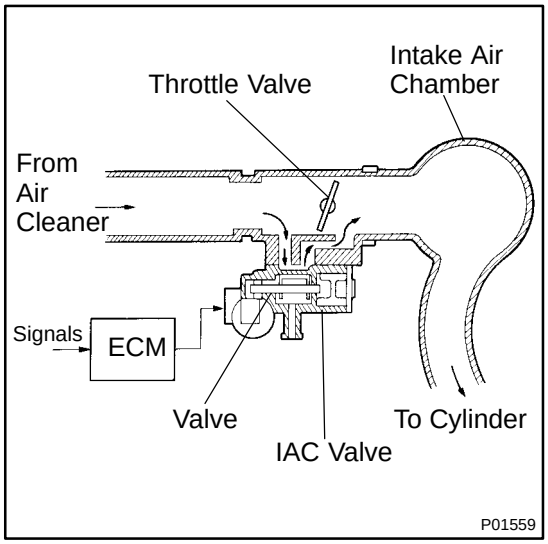

The rotary solenoid type IAC valve is located on the throttle body and intake air bypassing the throttle valve is directed to the IAC valve through a passage.
In this way the intake air volume bypassing the throttle valve is regulated, controlling the engine speed.
The ECM operates only the IAC valve to perform idle-up and provide feedback for the target idling speed.

DTC No.	DTC Detecting Condition	Trouble Area
P0505	Idle speed continues to vary greatly from the target speed	• IAC valve is stuck or closed • Open or short in IAC valve circuit • Open or short in A/C signal circuit • Air intake (hose loose)

WIRING DIAGRAM

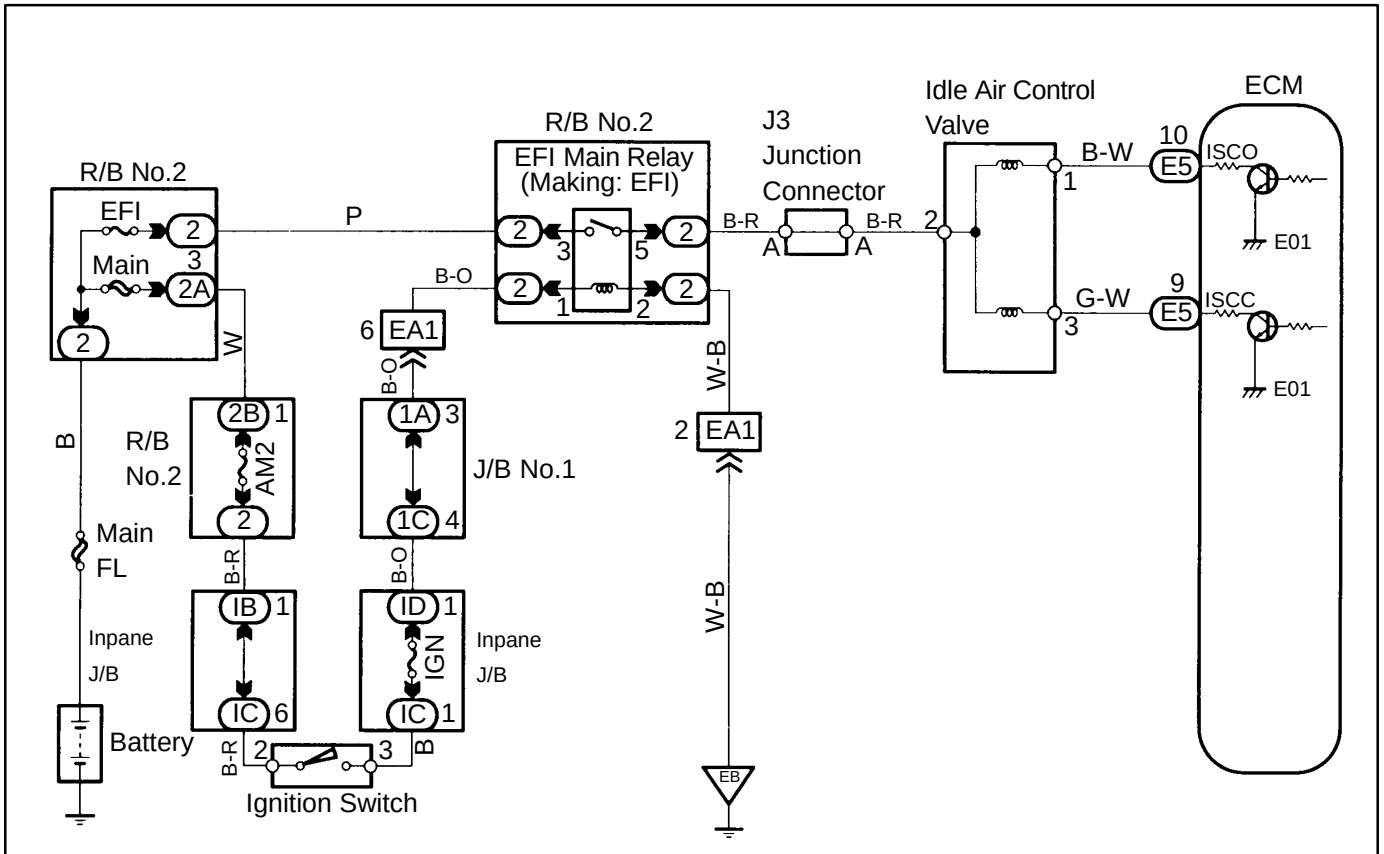

INSPECTION PROCEDURE

1	**Check air induction system (See page SF-1).**

NG → **Repair or replace.**

OK

2	**Check A/C signal circuit (See page AC-85).**

NG → **Repair or replace.**

OK

3	**Check voltage terminals RSC, RSO.**

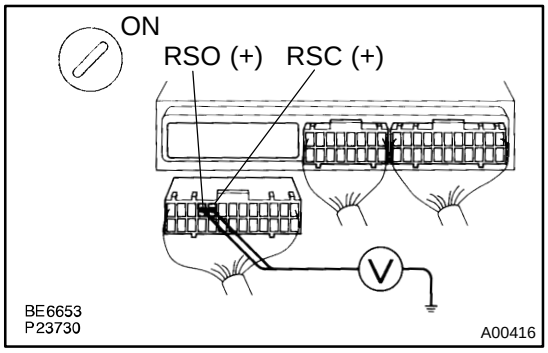

PREPARATION:

(a) Turn up the floor mat on the passenger side.
(b) Disconnect the "E5" connector of ECM.
(c) Turn ignition switch ON.

CHECK:

Measure voltage between terminals RSC, RSO of ECM connector and body ground,

OK:

Voltage: 9 - 14 V

OK → **Go to step 5.**

NG

4	Check IAC valve (See page SF-39).

NG → Replace IAC valve.

OK →

Check for open and short in harness and connector between injection connector and IAC valve and ECM (See page IN-28).

5	Check operation of the IAC valve (See page SF-39).

NG → Repair or replace IAC valve.

OK →

Check and replace ECM (See page IN-28).

DI518-01

DTC	P0505	Idle Control System Malfunction

CIRCUIT DESCRIPTION

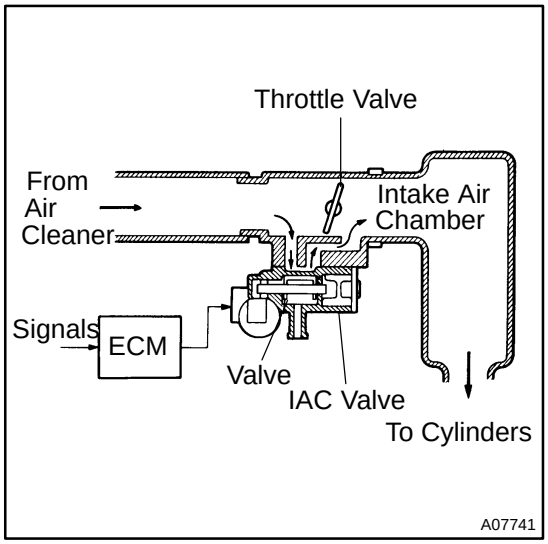

The rotary solenoid type IAC valve is located on the throttle body and intake air bypassing the throttle valve is directed to the IAC valve through a passage.
In this way the intake air volume bypassing the throttle valve is regulated, controlling the engine speed.
The ECM operates only the IAC valve to perform idle-up and provide feedback for the target idling speed.

DTC No.	DTC Detecting Condition	Trouble Area
P0505	Idle speed continues to vary greatly from the target speed (2 trip detection logic)	• IAC valve is stuck or closed • Open or short in IAC valve circuit • Open or short in A/C switch circuit • Air intake (hose loose)

WIRING DIAGRAM

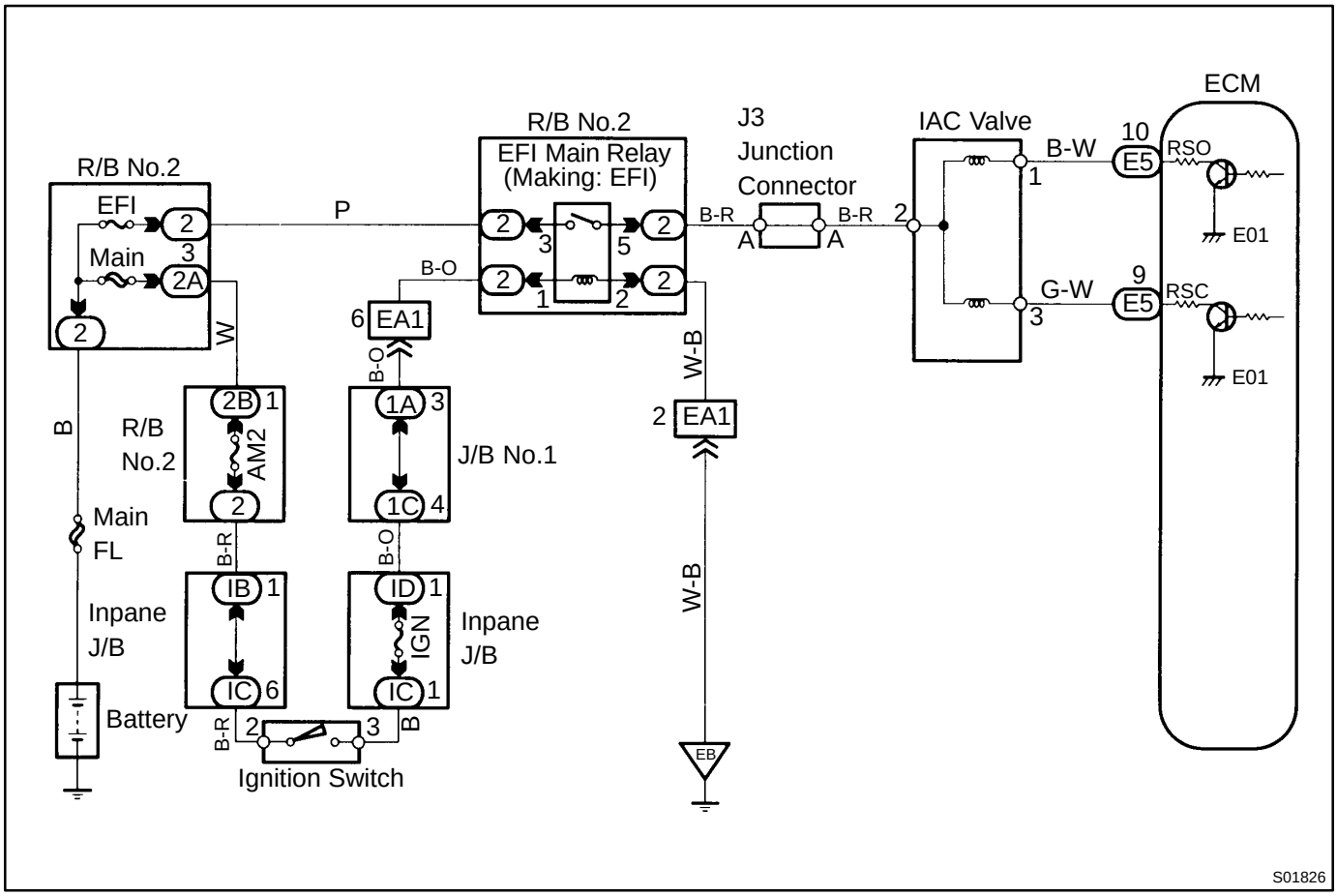

INSPECTION PROCEDURE

1	**Check air induction system (See page SF-1).**

NG → **Repair or replace.**

OK

2	**Check A/C signal circuit (See page AC-80).**

NG → **Repair or replace.**

OK

3	Check voltage terminals RSO, RSC.

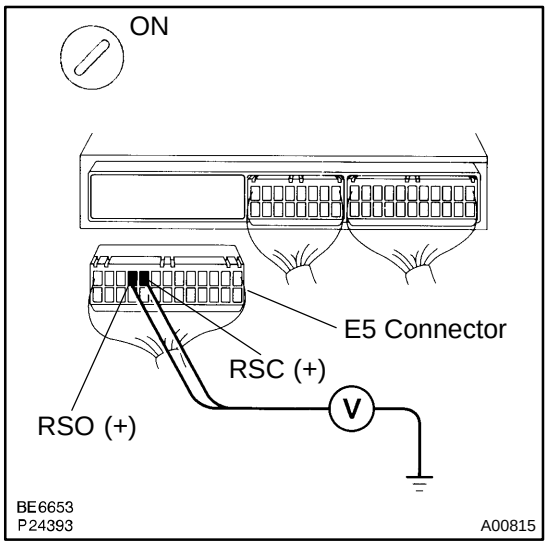

PREPARATION:

(a) Turn up the floor mat on the passenger side.
(b) Disconnect the "E5" connector of ECM.
(c) Turn ignition switch ON.

CHECK:

Measure voltage between terminals RSO, RSC of ECM connector and body ground,

OK:

Voltage: 9 - 14 V

OK → **Go to step 5.**

NG

4	Check IAC valve (See page SF-36).

NG → **Replace IAC valve.**

OK

Check for open and short in harness and connector between junction connector and IAC valve IAC valve and ECM (See page IN-28).

5	Check operation of the IAC valve (See page SF-36).

NG → **Repair or replace IAC valve.**

OK

Check and replace ECM (See page IN-28).

DI519-01

DTC	P1300	Igniter Circuit Malfunction

CIRCUIT DESCRIPTION

The ECM determines the ignition timing, turns on Tr1 at a predetermined angle (˚CA) before the desired ignition timing and outputs and ignition signal (IGT) ”1” to the igniter.
Since the width of the IGT signal is constant, the dwell angle control circuit in the igniter determines the time the control circuit starts primary current flow to the ignition coil based on the engine rpm and ignition timing one revolution ago, that is, the time the Tr2 turns on.
When it reaches the ignition timing, the ECM turns Tr1 off and outputs the IGT signal ”0”.
This turns Tr2 off, interrupting the primary current flow and generating a high voltage in the secondary coil which causes the spark plug to spark. Also, by the counter electromotive force generated when the primary current is interrupted, the igniter sends an ignition confirmation signal (IGF) to the ECM. The ECM stops fuel injection as a fail safe function when the IGF signal is not input to the ECM.

DTC No.	DTC Detecting Condition	Trouble Area
P1300	No IGF signal to ECM for 4 consecutive IGT signals during engine running	• Open or short in IGF or IGT circuit from igniter to ECM • Igniter • ECM

WIRING DIAGRAM

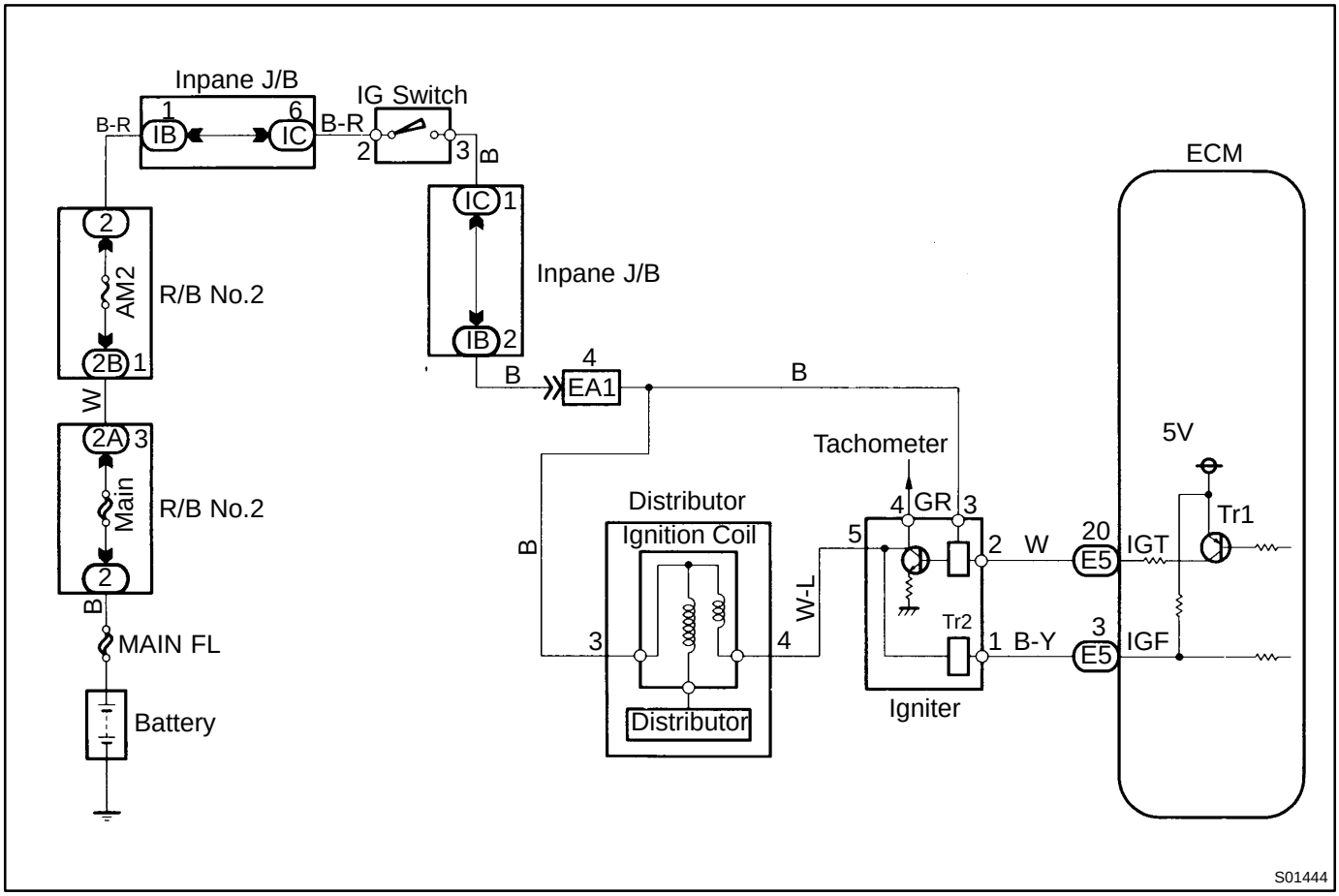

INSPECTION PROCEDURE

1	**Check spark plug and spark of misfiring cylinder (See page DI-53).**

NG → **Go to step 4.**

OK

2	**Check for open and short in harness and connector in IGF signal circuit between ECM and igniter (See page IN-28).**

NG → **Repair or replace harness or connector.**

OK

3	**Disconnect igniter connector and check voltage between terminal IGF of ECM connector and body ground.**

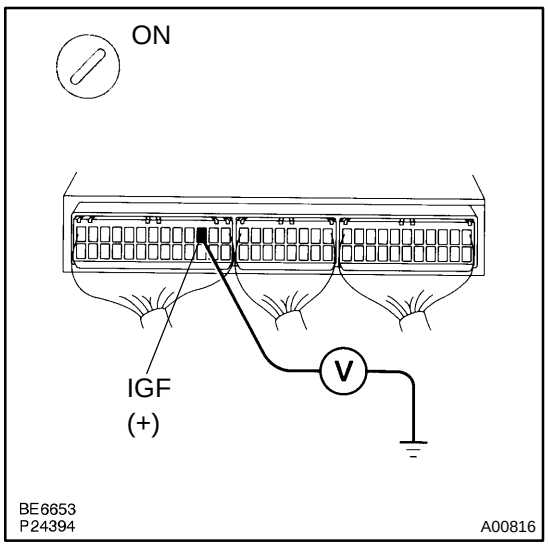

PREPARATION:
(a) Disconnect igniter connector.
(b) Turn up the floor mat on the passenger side.
(c) Turn ignition switch ON.

CHECK:
Measure voltage between terminal IGF of ECM connector and body ground.

OK:
Voltage: 4.5 - 5.5 V

OK → **Replace igniter (See page IG-1).**

NG

Check and replace ECM (See page IN-28).

4	**Check for open and short in harness and connector in IGT signal circuit between ECM and igniter (See page IN-28).**

NG → **Repair or replace harness or connector.**

OK

5	**Check voltage between terminals IGT of ECM connector and body ground.**

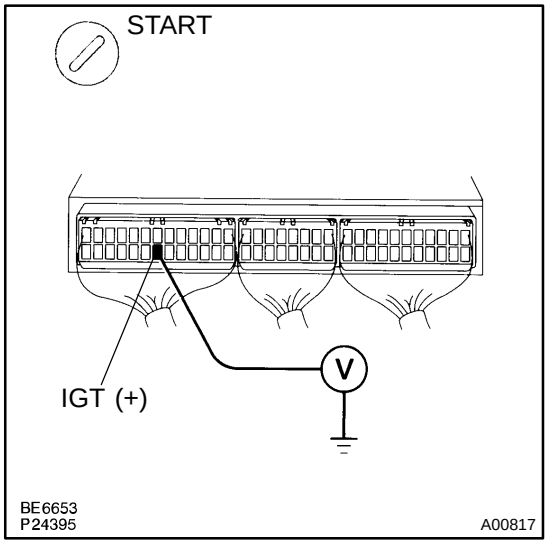

PREPARATION:
Turn up the floor mat on the passenger side.
CHECK:
Measure voltage between terminal IGT of ECM connector and body ground when engine is cranked.
OK:

Voltage: More than 0.1 V and less than 4.5 V

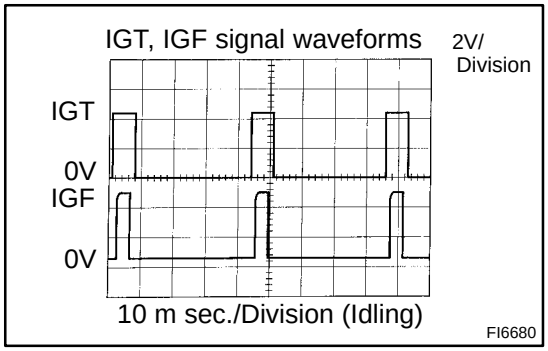

Reference: INSPECTION USING OSCILLOSCOPE
During idling, check waveform between terminals IGT and E1 of ECM.
HINT:
The correct waveform are as shown.

NG → **Check and replace ECM (See page IN-28).**

NG

6	**Disconnect igniter connector and check voltage between terminal IGT of ECM connector and body ground.**

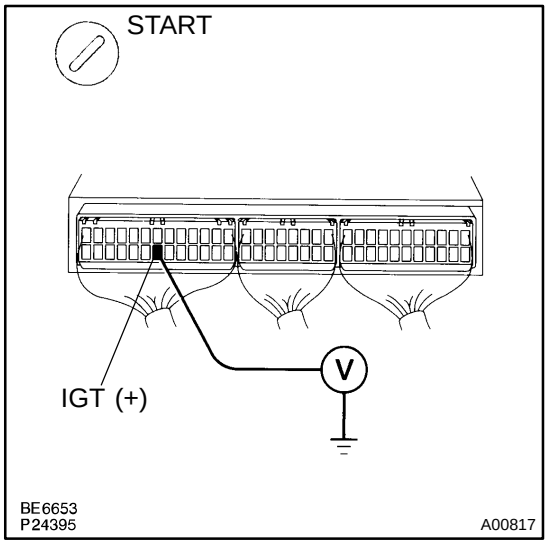

PREPARATION:

(a) Disconnect igniter connector.

(b) Turn up the floor mat on the passenger side.

CHECK:

Measure voltage between terminal IGT of ECM connector and body ground when engine is cranked.

OK:

Voltage: More than 0.1 V and less than 4.5 V

OK → **Check and replace ECM (See page IN-28).**

NG

7	**Check voltage between terminal 3 of igniter connector and body ground.**

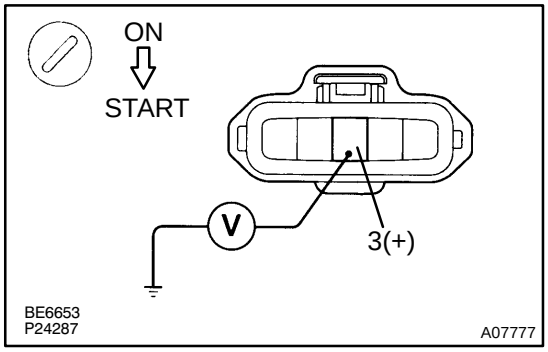

PREPARATION:

Disconnect igniter connector.

CHECK:

Measure voltage between terminal 3 of igniter connector and body ground, when ignition switch is turned to ”ON” and ”STA” position.

OK:

Voltage: 9 - 14 V

NG → **Check and repair igniter power source circuit.**

OK

8	**Check for open and short in harness and connector between ignition switch and ignition coil, ignition coil and igniter (See page IN-28).**

NG → **Repair or replace harness or connector.**

OK

Check and replace ECM (See page IN-28).

9	**Check ignition coil (See page IG-1).**

NG → **Replace ignition coil (See page IG-1).**

OK

Replace igniter (See page IG-1).

DI52R-01

DTC	P0750, P0755	Shift Solenoid A/B Malfunction (Shift Solenoid Valve No.1/No.2)

SYSTEM DESCRIPTION

The ECM uses signals from the vehicle speed sensor to detect the actual gear position (1st, 2nd, 3rd or O/D gear).
The ECM then compares the actual gear with the shift schedule in the ECM memory to detect mechanical trouble of the shift solenoid valves and valve body.

DTC No.	DTC Detecting Condition	Trouble Area
P0750 P0755	During normal driving, gear required by the ECM does not match the actual gear. (2 trip detection logic)	• Shift solenoid valve No.1/No.2 is stuck open or closed • Valve body is blocked up or stuck

HINT:
Check the shift solenoid valve No.1 when DTC P0750 is output and check the shift solenoid valve No.2 when DTC P0755 is output.

INSPECTION PROCEDURE

1	Check solenoid valve No.1 or No.2 operation.

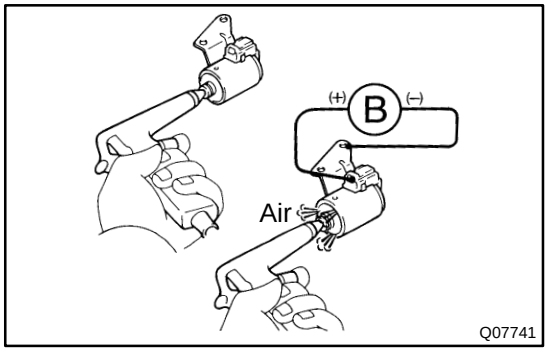

PREPARATION:
(a) Remove the oil pan.
(b) Remove the shift solenoid valve No.1 or No.2.

CHECK:
(a) Applying 490 kPa (5 kgf/cm^2, 71 psi) of compressed air, check that solenoid valves do not leak air.
(b) When battery positive voltage is supplied to the solenoid valves, check that solenoid valve open.

NG → **Replace the shift solenoid valve No.1 or No.2.**

OK

2	Check valve body (See page DI-233).

NG → **Repair or replace valve body.**

OK

Repair or replace transaxle (See page AX-14).

DI537-02

DTC	P0750, P0755	Shift Solenoid A/B Malfunction (Shift Solenoid Valve No.1/No.2)

SYSTEM DESCRIPTION

The ECM uses signals from the vehicle speed sensor to detect the actual gear position (1st, 2nd, 3rd or O/D gear). The ECM then compares the actual gear with the shift schedule in the ECM memory to detect mechanical trouble of the shift solenoid valves and valve body.

DTC No.	DTC Detecting Condition	Trouble Area
P0750 P0755	During normal driving, the gear required by the ECM does not match the actual gear (2 trip detection logic)	• Shift solenoid valve No.1/No.2 is stuck open or closed • Valve body is blocked up or stuck

HINT:
Check the shift solenoid valve No.1 when DTC P0750 is output and check the shift solenoid valve No.2 when DTC P0755 is output.

INSPECTION PROCEDURE

1	**Check shift solenoid valve No.1 or No.2 operation.**

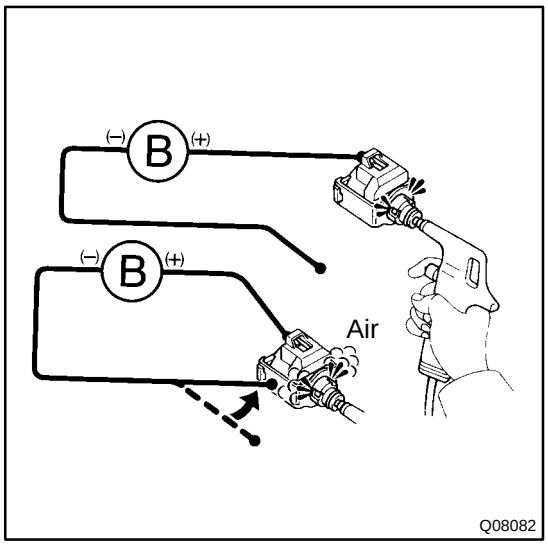

PREPARATION:
(a) Remove the oil pan.
(b) Remove the shift solenoid valve No.1 or No.2.

CHECK:
(a) Applying 490 kPa (5 kgf/cm^2, 71 psi) of compressed air, check that the solenoid valves does not leak air.
(b) When battery positive voltage is supplied to the shift solenoid valves, check they open.

NG → **Replace shift solenoid valve No.1 or No.2.**

OK

2	Check valve body (See page DI-276).

NG → Repair or replace valve body.

OK →

Repair the transaxle (See page AX-13).

DI52S-01

DTC	P0753, P0758	Shift Solenoid A/B Electrical Malfunction (Shift Solenoid Valve No.1/No.2)

CIRCUIT DESCRIPTION

Shifting from 1st to O/D is done in combination with ON and OFF of the shift solenoid valves No.1 and No.2 controlled by ECM. If an open or short circuit occurs in either of the shift solenoid valves, the ECM controls the remaining normal shift solenoid valve to allow the vehicle to be operated smoothly (Fail safe function).
Fail safe function:
If either of the shift solenoid valve circuits develops an open or short, the ECM turns the other shift solenoid ON and OFF to shift to the gear positions shown in the table below. The ECM also turns the shift solenoid valve SL OFF at the same time. If both solenoids are malfunction, hydraulic control cannot be done electronically so it must be done manually.
Manual shifting as shown in the following table must be done (In the case of a short circuit, the ECM stops sending current to the short circuited solenoid).

Position	NORMAL			SHIFT SOLENOID NO.1 MALFUNCTIONING			SHIFT SOLENOID NO.2 MALFUNCTIONING			BOTH SOLENOIDS MALFUNCTIONING
	Solenoid valve		Gear	Solenoid valve		Gear	Solenoid valve		Gear	Gear when shift selector is manually operated
	No.1	No.2		No.1	No.2		No.1	No.2		
D	ON	OFF	1st	X	ON	3rd	ON	X	1st	O/D
	ON	ON	2nd	X	ON	3rd	OFF	X	O/D	O/D
	OFF	ON	3rd	X	ON	3rd	OFF	X	O/D	O/D
	OFF	OFF	O/D	X	OFF	O/D	OFF	X	O/D	O/D
2	ON	OFF	1st	X	ON	3rd	ON	X	1st	3rd
	ON	ON	2nd	X	ON	3rd	OFF	X	3rd	3rd
	OFF	ON	3rd	X	ON	3rd	OFF	X	3rd	3rd
L	ON	OFF	1st	X	OFF	1st	ON	X	1st	1st
	ON	ON	2nd	X	ON	2nd	ON	X	1st	1st

X: Malfunctions

HINT:
Check the shift solenoid valve No.1 when DTC P0753 is output and check the shift solenoid valve No.2 when DTC P0758 is output.

DTC No.	DTC Detecting Condition	Trouble Area
P0753 P0758	The ECM checks for an open or short circuit in the shift solenoid valves No.1 and No.2 circuit when it changes. The ECM records DTC P0753 or P0758 if condition (a) or (b) is detected once, but it does not light up the MIL. After ECM detects condition (a) or (b) continuously 2 times or more in one-trip, it causes the MIL light up until condition (a) or (b) disappears. After that, if the ECM detects condition (a) or (b) once, it starts lighting up the MIL. (a) Solenoid resistance is 8 Ω or less (short circuit) when solenoid is energized. (b) Solenoid resistance is 100 kΩ or more (open circuit) when solenoid is not energized.	• Open or short in shift solenoid valve No.1/No.2 circuit • Shift solenoid valve No.1/No.2 • ECM

WIRING DIAGRAM

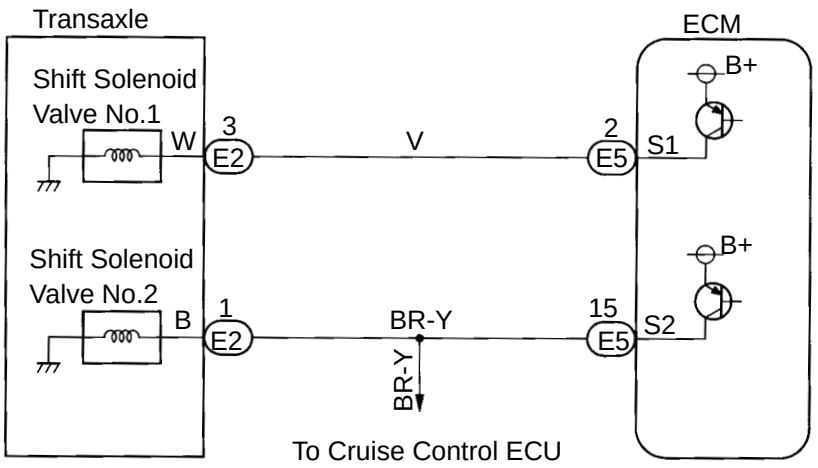

INSPECTION PROCEDURE

1	**Measure resistance between terminal S1 or S2 of ECM and body ground.**

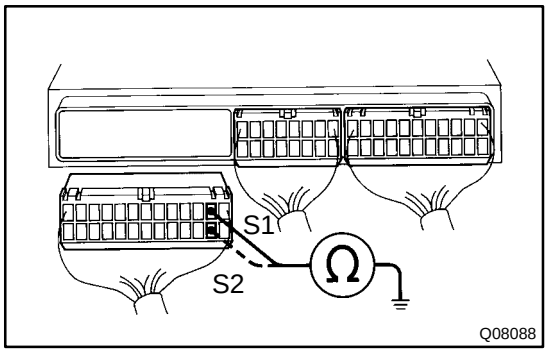

PREPARATION:
Disconnect the connector from ECM.
CHECK:
Measure resistance between terminal S1 or S2 of ECM and body ground.
OK:
Resistance: 11 - 15 Ω

OK	**Check and replace the ECM.**

NG

2	**Check harness and connector between ECM and automatic transaxle solenoid connector.**

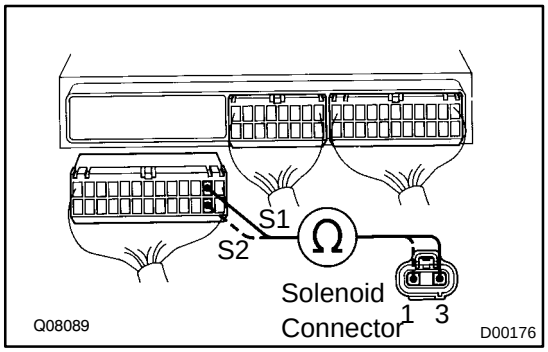

PREPARATION:
(a) Disconnect the connector from ECM.
(b) Disconnect the solenoid connector from the automatic transaxle.

CHECK:
Check the harness and connector between terminal S1 or S2 of ECM and terminal 3 or 1 of solenoid connector.

OK:

There is no open and no short circuit.

NG	**Repair or replace the harness or connector.**

OK

3	**Check shift solenoid valve No.1 or No.2.**

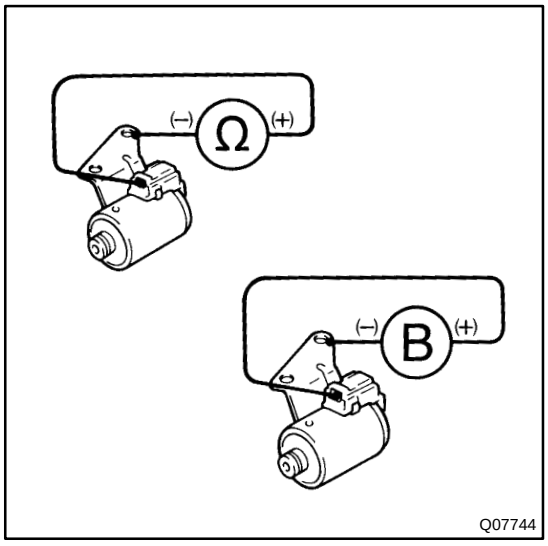

PREPARATION:
(a) Jack up the vehicle.
(b) Remove the oil pan.
(c) Disconnect the solenoid connector.
(d) Remove the shift solenoid valve No.1 or No.2.

CHECK:
Measure resistance between solenoid connector and solenoid body.

OK:

Resistance: 11 - 15 Ω

CHECK:
Connect the positive ⊕ lead to terminal of solenoid connector, negative ⊖ lead to solenoid body.

OK:

The solenoid makes an operating noise.

NG	**Replace solenoid valve.**

OK

Repair or replace solenoid wire.

DI538-02

DTC	P0753, P0758	Shift Solenoid A/B Electrical Malfunction (Shift Solenoid Valve No.1/No.2)

CIRCUIT DESCRIPTION

Shifting from 1st to O/D is done in combination with ON and OFF of the shift solenoid valves No.1 and No.2 controlled by ECM. If an open or short circuit occurs in either of the shift solenoid valves, the ECM controls the remaining normal shift solenoid valve to allow the vehicle to be operated safely (Fail safe function).

Fail Safe Function

If either of the shift solenoid valve circuits develops an open or a short, the ECM turns the other shift solenoid ON and OFF to shift to the gear positions shown in the table below. The ECM also turns the shift solenoid valve SL OFF at the same time. If both solenoids are malfunction, hydraulic control cannot be done electronically so it must be done manually.

Manual shifting as shown in the following table must be done. (In the case of a short circuit, the ECM stops sending current to the short circuited solenoid).

Position	NORMAL			SHIFT SOLENOID NO.1 MALFUNCTIONING			SHIFT SOLENOID NO.2 MALFUNCTIONING			BOTH SOLENOIDS MALFUNCTIONING
	Solenoid valve		Gear	Solenoid valve		Gear	Solenoid valve		Gear	Gear when shift selector is manually operated
	No.1	No.2		No.1	No.2		No.1	No.2		
D	ON	OFF	1st	X	ON	3rd	ON	X	1st	O/D
	ON	ON	2nd	X	ON	3rd	OFF	X	O/D	O/D
	OFF	ON	3rd	X	ON	3rd	OFF	X	O/D	O/D
	OFF	OFF	O/D	X	OFF	O/D	OFF	X	O/D	O/D
2	ON	OFF	1st	X	ON	3rd	ON	X	1st	3rd
	ON	ON	2nd	X	ON	3rd	OFF	X	3rd	3rd
	OFF	ON	3rd	X	ON	3rd	OFF	X	3rd	3rd
L	ON	OFF	1st	X	OFF	1st	ON	X	1st	1st
	ON	ON	2nd	X	ON	2nd	ON	X	1st	1st

X: Malfunctions

HINT:

Check the shift solenoid valve No.1 when DTC P0753 is output and check the shift solenoid valve No.2 when DTC P0758 is output.

DTC No.	DTC Detecting Condition	Trouble Area
P0753 P0758	The ECM checks for an open or short circuit in the shift solenoid valves No.1 and No.2 circuit when it changes. The ECM records DTC P0753 or P0758 if condition (a) or (b) is detected once, but it does not light up the MIL. After ECM detects condition (a) or (b) continuously 2 times or more in one-trip, it causes the MIL light up until condition (a) or (b) disappears. After that, if the ECM detects condition (a) or (b) once, it starts lighting up the MIL again. (a) Solenoid resistance is 8 Ω or less short circuit when solenoid is energized. (b) Solenoid resistance is 100 kΩ or more open circuit when solenoid is not energized.	• Open or short in shift solenoid valve No.1/No.2 circuit • Shift solenoid valve No.1/No.2 • ECM

WIRING DIAGRAM

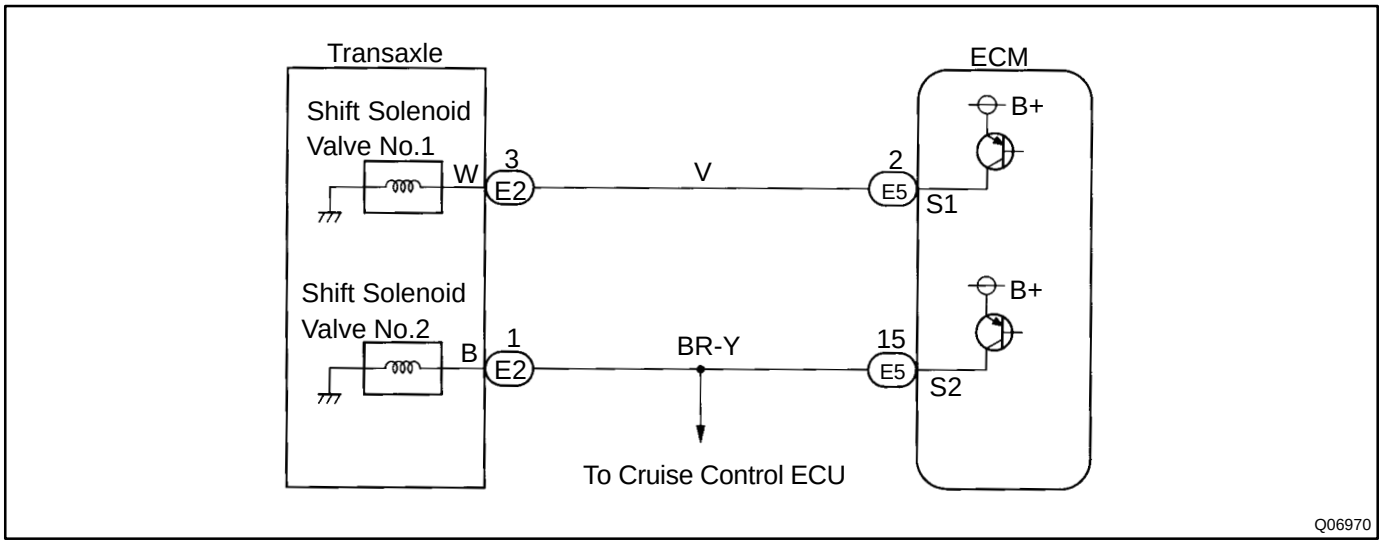

INSPECTION PROCEDURE

1	**Measure resistance between terminal S1 or S2 of ECM and body ground.**

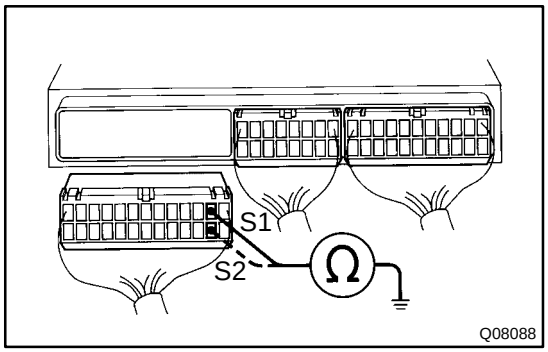

PREPARATION:
Disconnect the connector from ECM.
CHECK:
Measure resistance between terminal S1 or S2 of ECM and body ground.
OK:
Resistance: 11 - 15 Ω

OK	**Check and replace ECM.**

NG

2	**Check harness and connector between ECM and automatic transaxle solenoid connector.**

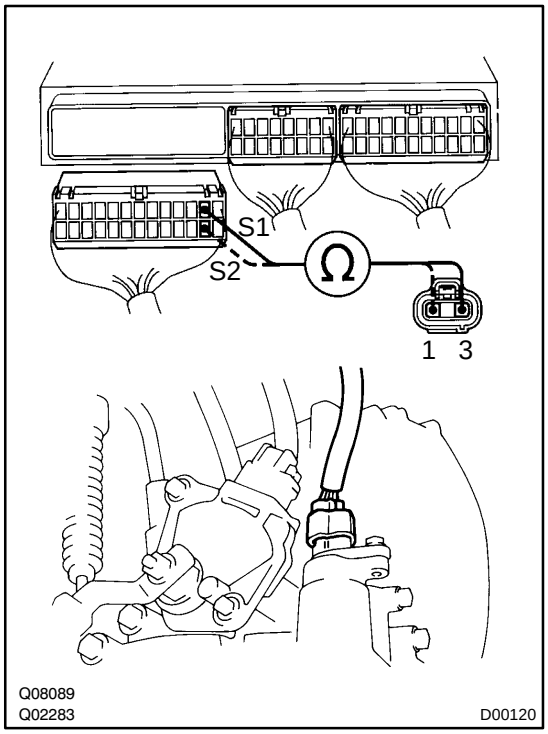

PREPARATION:

(a) Disconnect the connector from ECM.

(b) Disconnect the solenoid connector from the automatic transaxle.

CHECK:

Check the harness and connector between terminal S1 or S2 of ECM and terminal 3 or 1 of solenoid connector.

OK:

There is no open and no short circuit.

NG → **Repair or replace harness or connector.**

OK

3	**Check shift solenoid valve No.1 or No.2.**

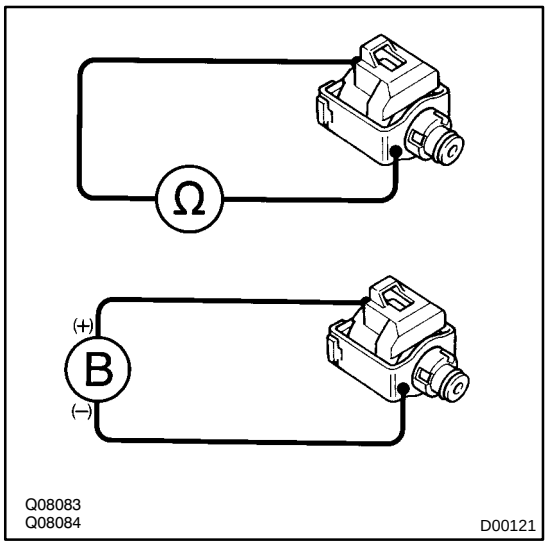

PREPARATION:

(a) Jack up the vehicle.
(b) Remove the oil pan.
(c) Disconnect the solenoid connector.
(d) Remove shift solenoid valve No.1 or No.2.

CHECK:

Measure resistance between solenoid connector and solenoid body.

OK:

Resistance: 11 - 15 Ω

CHECK:

Connect positive ⊕ lead to terminal of solenoid connector, negative ⊖ lead to solenoid body.

OK:

The solenoid makes an operating noise.

NG → **Replace shift solenoid valve.**

OK

Repair or replace solenoid wire.

DI52T-01

DTC	P0770	Shift Solenoid E Malfunction (Shift Solenoid Valve SL)

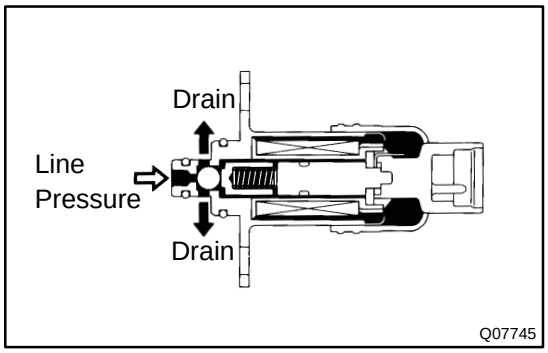

SYSTEM DESCRIPTION

The ECM uses the signals from the throttle position sensor and air-flow meter to monitor the engagement condition of the lock-up clutch.

Then the ECM compares the engagement condition of the lock-up clutch with the lock-up schedule in the ECM memory to detect mechanical trouble of the shift solenoid valve SL, valve body and torque converter clutch.

DTC No.	DTC Detecting Condition	Trouble Area
P0770	Lock-up does not occur when driving in the lock-up range (normal driving at 80 km/h [50 mph]), or lock-up remains ON in the lock-up OFF range. (2 trip detection logic)	• Shift solenoid valve SL is stuck open or closed • Valve body blocked up or stuck • Lock-up clutch

INSPECTION PROCEDURE

1	Check shift solenoid valve SL operation.

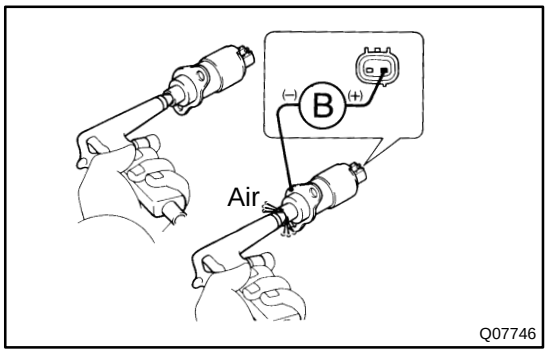

PREPARATION:

Remove the shift solenoid valve SL from valve body.

CHECK:

(a) Applying 490 kPa (5 kgf/cm^2, 71 psi) of compressed air, check that the solenoid valve does not leak air.

(b) When battery positive voltage is supplied to the shift solenoid valve, check that the solenoid valve opens.

NG → **Replace the solenoid valve SL.**

OK

2	Check valve body (See page DI-233).

NG → Repair or replace valve body.

OK →

Replace the torque converter clutch (See page AX-20).

DI539-02

DTC	P0770	Shift Solenoid E Malfunction (Shift Solenoid Valve SL)

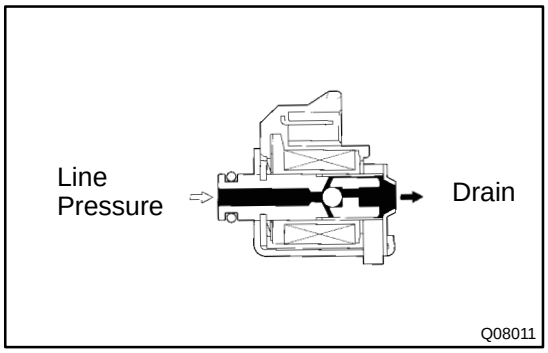

SYSTEM DESCRIPTION

The ECM uses the signals from the throttle position sensor and air-flow meter to monitor the engagement condition of the lock-up clutch.

Then the ECM compares the engagement condition of the lock-up clutch with the lock-up schedule in the ECM memory to detect mechanical trouble of the shift solenoid valve SL, valve body and torque converter clutch.

DTC No..	DTC Detecting Condition	Trouble Area
P0770	Lock-up does not occur when driving in the lock-up range (normal driving at 80 km/h [50 mph]), or lock-up remains ON in the lock-up OFF range. (2 trip detection logic)	• Shift solenoid valve SL is stuck open or closed • Valve body blocked up or stuck • Lock-up clutch

INSPECTION PROCEDURE

1	Check solenoid valve SL operation.

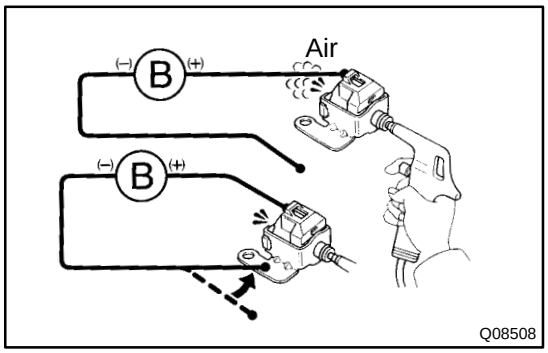

PREPARATION:

(a) Remove the oil pan.

(b) Remove the shift solenoid valve SL from valve body.

CHECK:

(a) Applying 490 kPa (5 kgf/cm^2, 71 psi) of compressed air, check that the solenoid valve opens.

(b) When battery positive voltage is supplied to the shift solenoid valve, it does not leak air.

NG → **Replace shift solenoid valve SL.**

OK

2	Check valve body (See page DI-276).

NG → Repair or replace valve body.

OK →

Replace torque converter clutch (See page AX-21).

DI52U-01

DTC	P0773	Shift Solenoid E Electrical Malfunction (Shift Solenoid Valve SL)

CIRCUIT DESCRIPTION

The shift solenoid valve SL is turned ON and OFF by signals from the ECM to control the hydraulic pressure acting on the lock-up relay valve, which then controls operation of the lock-up clutch.

Fail Safe Function

If the ECM detects a malfunction, it turns the shift solenoid valve SL OFF.

DTC No.	DTC Detecting Condition	Trouble Area
P0773	Either (a) or (b) are detected for 1 time. (2 trip detection logic) (a) Solenoid resistance is 8 Ω or less short circuit when solenoid is energized. (b) Solenoid resistance is 100 kΩ or more open circuit when solenoid is not energized.	• Open or short in shift solenoid valve SL circuit • Shift solenoid valve SL • ECM

WIRING DIAGRAM

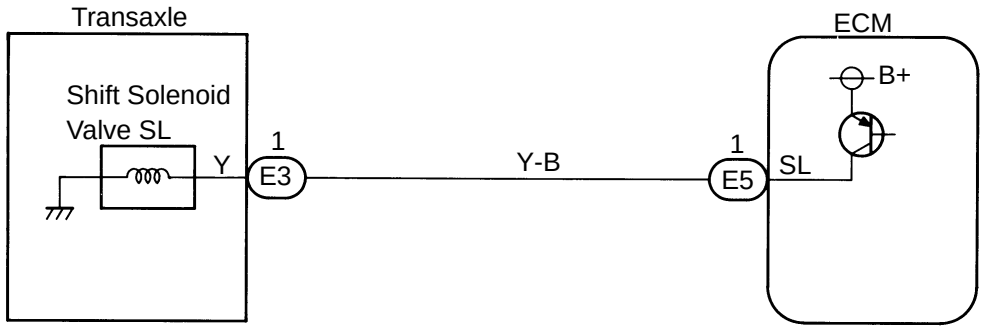

Q06971

INSPECTION PROCEDURE

1	**Measure resistance between terminal SL of ECM and body ground.**

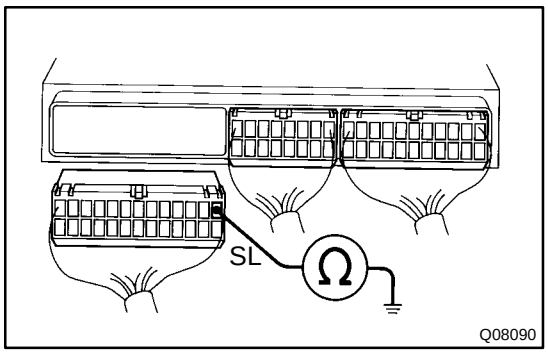

PREPARATION:
Disconnect the connector from ECM.
CHECK:
Measure resistance between terminal SL of ECM and body ground.
OK:
Resistance: 11 - 15 Ω

OK	**Check and replace ECM.**

NG

2	**Check harness and connector between ECM and automatic transaxle solenoid connector.**

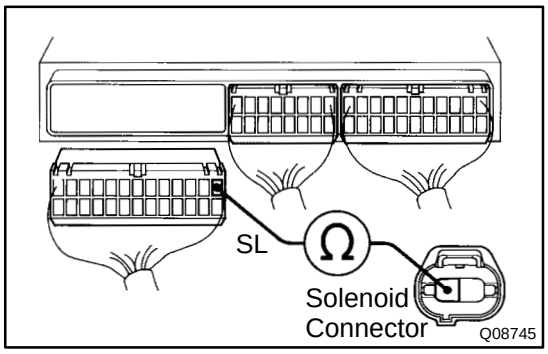

PREPARATION:
(a) Disconnect the connector from ECM.
(b) Disconnect the solenoid connector from the automatic transaxle.
CHECK:
Check harness between terminal SL of ECM and terminal of solenoid connector.
OK:
There is no open or short circuit.

NG	**Repair or replace harness or connector.**

OK

3	**Check shift solenoid valve SL.**

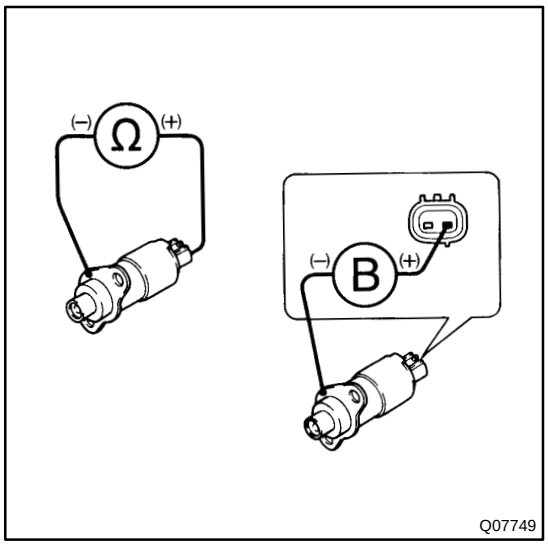

PREPARATION:

(a) Jack up the vehicle.
(b) Disconnect the shift solenoid valve SL connector.
(c) Remove the oil pan.
(d) Remove the shift solenoid valve SL.

CHECK:

Measure resistance between solenoid connector and solenoid body.

OK:

Resistance: 11 - 15 Ω

CHECK:

Connect positive ⊕ lead to terminal of solenoid connector, negative ⊖ lead to solenoid body.

OK:

The shift solenoid valve SL makes operation noise.

NG → **Replace shift solenoid valve SL.**

OK

Check and replace or repair the solenoid wire.

DI53A-02

DTC	P0773	Shift Solenoid E Electrical Malfunction (Shift Solenoid Valve SL)

CIRCUIT DESCRIPTION

The shift solenoid valve SL is turned ON and OFF by signals from the ECM to control the hydraulic pressure acting on the lock-up relay valve, which then controls operation of the lock-up clutch.

Fail Safe Function

If the ECM detects a malfunction, it turns the shift solenoid valve SL OFF.

DTC No.	DTC Detecting Condition	Trouble Area
P0773	Either (a) or (b) are detected for 1 time. (2 trip detection logic) (a) Solenoid resistance is 8 Ω or less short circuit when solenoid is energized. (b) Solenoid resistance is 100 kΩ or more open circuit when solenoid is not energized.	• Open or short in shift solenoid valve SL circuit • Shift solenoid valve SL • ECM

WIRING DIAGRAM

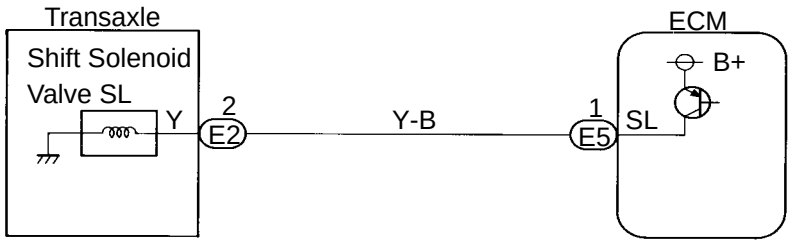

Q06971

INSPECTION PROCEDURE

1	**Measure resistance between terminal SL of ECM and body ground.**

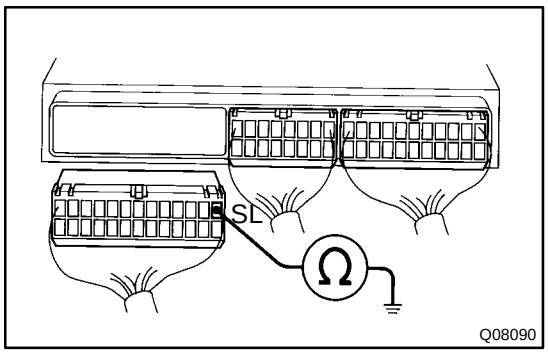

PREPARATION:
Disconnect the connector from ECM.
CHECK:
Measure resistance between terminal SL of ECM and body ground.
OK:
Resistance: 11 - 15 Ω

OK	**Check and replace ECM.**

NG

2	**Check harness and connector between ECM and automatic transaxle solenoid connector.**

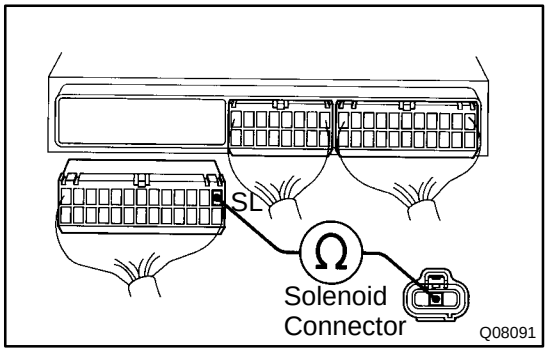

PREPARATION:
(a) Disconnect the connector from ECM.
(b) Disconnect the solenoid connector from the automatic transaxle.
CHECK:
Check harness between terminal SL of ECM and terminal 2 of automatic transaxle solenoid connector.
OK:
There is no open or short circuit.

NG	**Repair or replace the harness or connector.**

OK

3	Check shift solenoid valve SL.

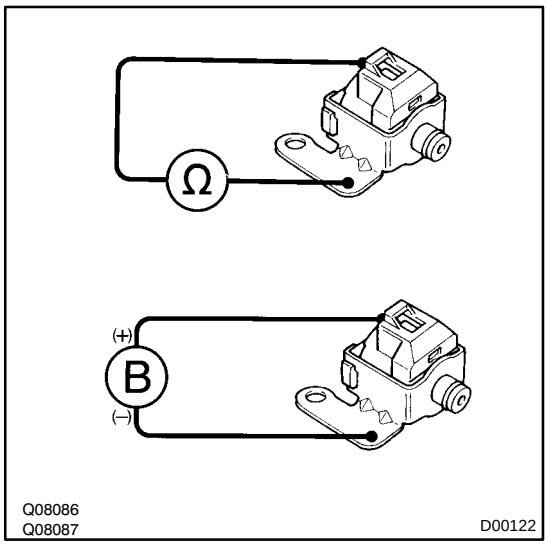

PREPARATION:

(a) Jack up the vehicle.
(b) Remove the oil pan.
(c) Disconnect the shift solenoid valve SL connector.
(d) Remove the shift solenoid valve SL.

CHECK:

Measure resistance between solenoid connector and solenoid body.

OK:

Resistance: 11 - 15 Ω

CHECK:

Connect positive ⊕ lead to terminal of solenoid connector, negative ⊖ lead to solenoid body.

OK:

The shift solenoid valve SL makes operation noise.

NG → **Replace shift solenoid valve SL.**

OK

Check and replace or repair the solenoid wire.

DI52A-02

DTC	P1300	Igniter Circuit Malfunction

CIRCUIT DESCRIPTION

The ECM determines the ignition timing, turns on Tr_1 at a predetermined angle (˚CA) before the desired ignition timing and outputs an ignition signal (IGT) ”1” to the igniter.
Since the width of the IGT signal is constant, the dwell angle control circuit in the igniter determines the time the control circuit starts primary current flow to the ignition coil based on the engine rpm and ignition timing one revolution ago, that is, the time the Tr2 turns on.
When it reaches the ignition timing, the ECM turns Tr1 off and outputs the IGT signal ”0”.
This turns Tr2 off, interrupting the primary current flow and generating a high voltage in the secondary coil which causes the spark plug to spark. Also, by the counter electromotive force generated when the primary current is interrupted, the igniter sends an ignition confirmation signal (IGF) to the ECM.
The ECM stops fuel injection as a fail safe function when the IGF signal is not input to the ECM.

DTC No.	DTC Detecting Condition	Trouble Area
P1300	No IGF signal to ECM for 4 consecutive IGT signals during engine running	• Open or short in IGF or IGT circuit from igniter to ECM • Igniter • ECM

WIRING DIAGRAM

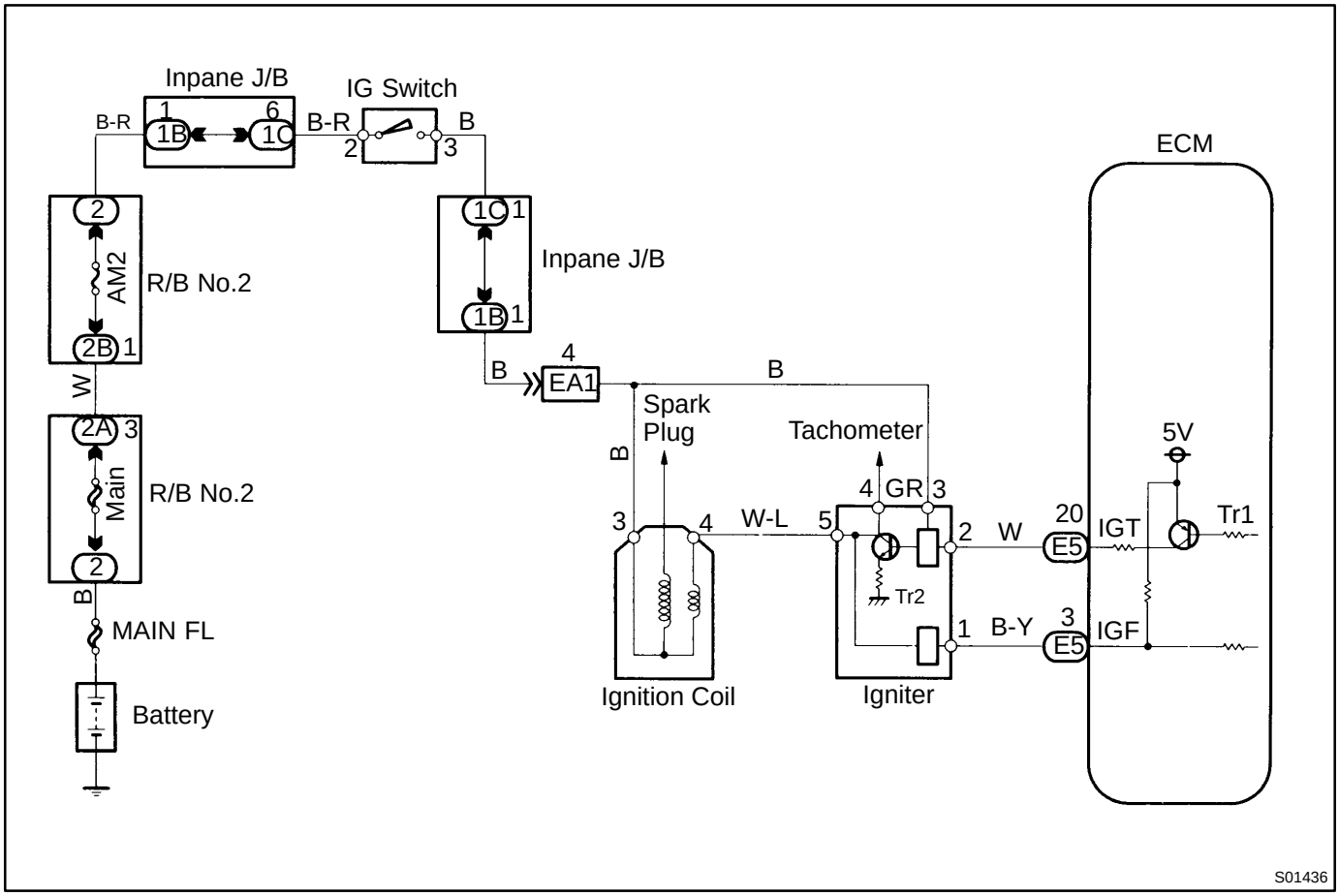

INSPECTION PROCEDURE

1	**Check for spark plug and spark (See page IG-1, IG-7).**

NG → **Go to step 4.**

OK

2	**Check for open and short in harness and connector in IGF signal circuit between ECM and igniter (See page IN-28).**

NG → **Repair or replace harness or connector.**

OK

3	**Disconnect igniter connector and check voltage between terminal IGF of ECM connector and body ground.**

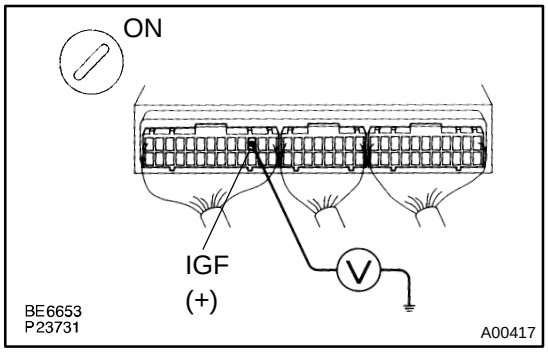

PREPARATION:

(a) Disconnect igniter connector.
(b) Turn up the floor mat on the passenger side.
(c) Turn ignition switch ON.

CHECK:

Measure voltage between terminal IGF of ECM connector and body ground.

OK:

Voltage: 4.5 - 5.5 V

OK → **Replace igniter.**

NG

Check and replace ECM (See page IN-28).

4	**Check for open and short in harness and connector in IGT signal circuit between ECM and igniter (See page IN-28).**

NG → **Repair or replace harness or connector.**

OK

5	**Check voltage between terminals IGT of ECM connector and body ground.**

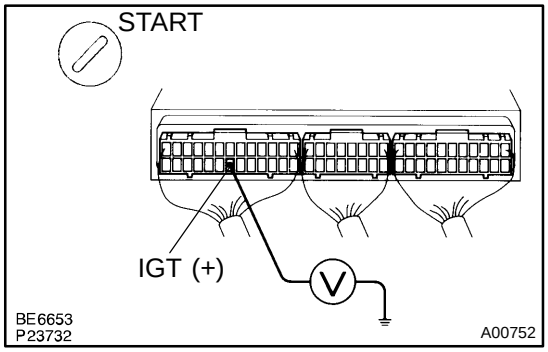

PREPARATION:
Turn up the floor mat on the passenger side.
CHECK:
Measure voltage between terminal IGT of ECM connector and body ground when engine is cranked.
OK:
Voltage: More than 0.1 V and less than 4.5 V

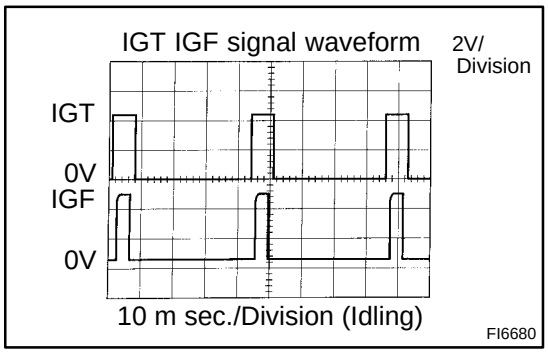

Reference: INSPECTION USING OSCILLOSCOPE
During idling, check waveform between terminal IGT and E1 of ECM.
HINT:
The correct waveforms are as shown.

NG → **Check and replace ECM (See page IN-28).**

NG

6	**Disconnect igniter connector and check voltage between terminal IGT of ECM connector and body ground.**

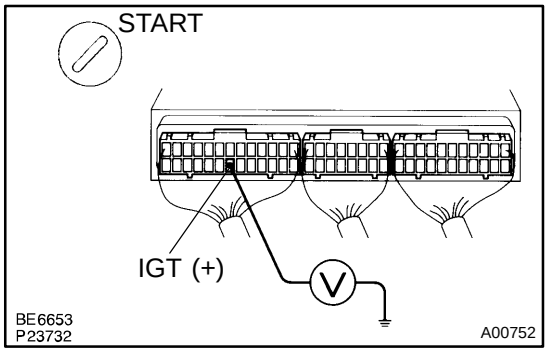

PREPARATION:
(a) Disconnect igniter connector.
(b) Turn up the floor mat on the passenger side.

CHECK:
Measure voltage between terminal IGT of ECM connector and body ground when engine is cranked.

OK:

Voltage: More than 0.1 V and less than 4.5 V

OK	**Replace igniter.**

NG

7	**Check voltage between terminal 3 of igniter connector and body ground.**

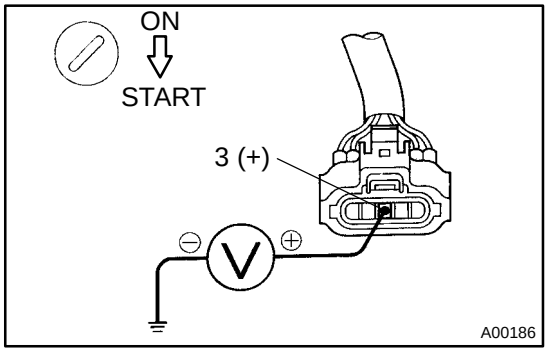

PREPARATION:
Disconnect igniter connector.

CHECK:
Measure voltage between terminal 3 of igniter connector and body ground, when ignition switch is turned to ”ON” and ”START” position.

OK:

Voltage: 9 - 14 V

NG	**Check and repair igniter power source circuit.**

OK

8	**Check for open and short in harness and connector between ignition switch and ignition coil, ignition coil and igniter (See page IN-28).**

NG	**Repair or replace harness or connector.**

OK

9	**Check ignition coil (See page IG-1).**

NG → **Replace ignition coil.**

OK

Replace igniter.

DI52B-01

DTC	P1335	Crankshaft Position Sensor Circuit Malfunction (during engine running)

CIRCUIT DESCRIPTION

Refer to Crankshaft Position Sensor " A " Circuit Malfunction on page DI-168 .

DTC No.	DTC Detection Condition	Trouble Area
P1335	No crankshaft position sensor signal to ECM with engine speed 1,000 rpm or more	• Open or short in crankshaft position sensor circuit • Crankshaft position sensor • ECM

See DTC P0335 for Wiring Diagram and Inspection Procedure.

DI51A-01

DTC	P1335	Crankshaft Position Sensor Circuit Malfunction (during engine running)

CIRCUIT DESCRIPTION

Refer to Crankshaft Position Sensor ”A” Circuit Malfunction on page DI-88

DTC No.	DTC Detecting Condition	Trouble Area
P1335	If conditions (a) through (c) are met: (a) NE ≧ 1,000 rpm (b) NE signal is not detected for over 50 m sec. (c) Not during cranking	• Open or short in crankshaft position sensor circuit • Crankshaft position sensor • ECM

See DTC P0335 for Wiring Diagram and Inspection Procedure.

DI52C-02

DTC	P1500	Starter Signal Circuit Malfunction

CIRCUIT DESCRIPTION

When the engine is cranked, the intake air flow is slow, so fuel vaporization is poor. A rich mixture is therefore necessary in order to achieve good startability. While the engine is being cranked, the battery positive voltage is applied to terminal STA of the ECM. The starter signal is mainly used to increase the fuel injection volume for the starting injection control and after-start injection control.

DTC No.	DTC Detection Condition	Trouble Area
P1500	No starter signal to ECM	• Open or short in starter signal circuit • Open or short in ignition switch or starter relay circuit • ECM

HINT:
In this circuit, diagnosis can only be made in the check mode.

WIRING DIAGRAM

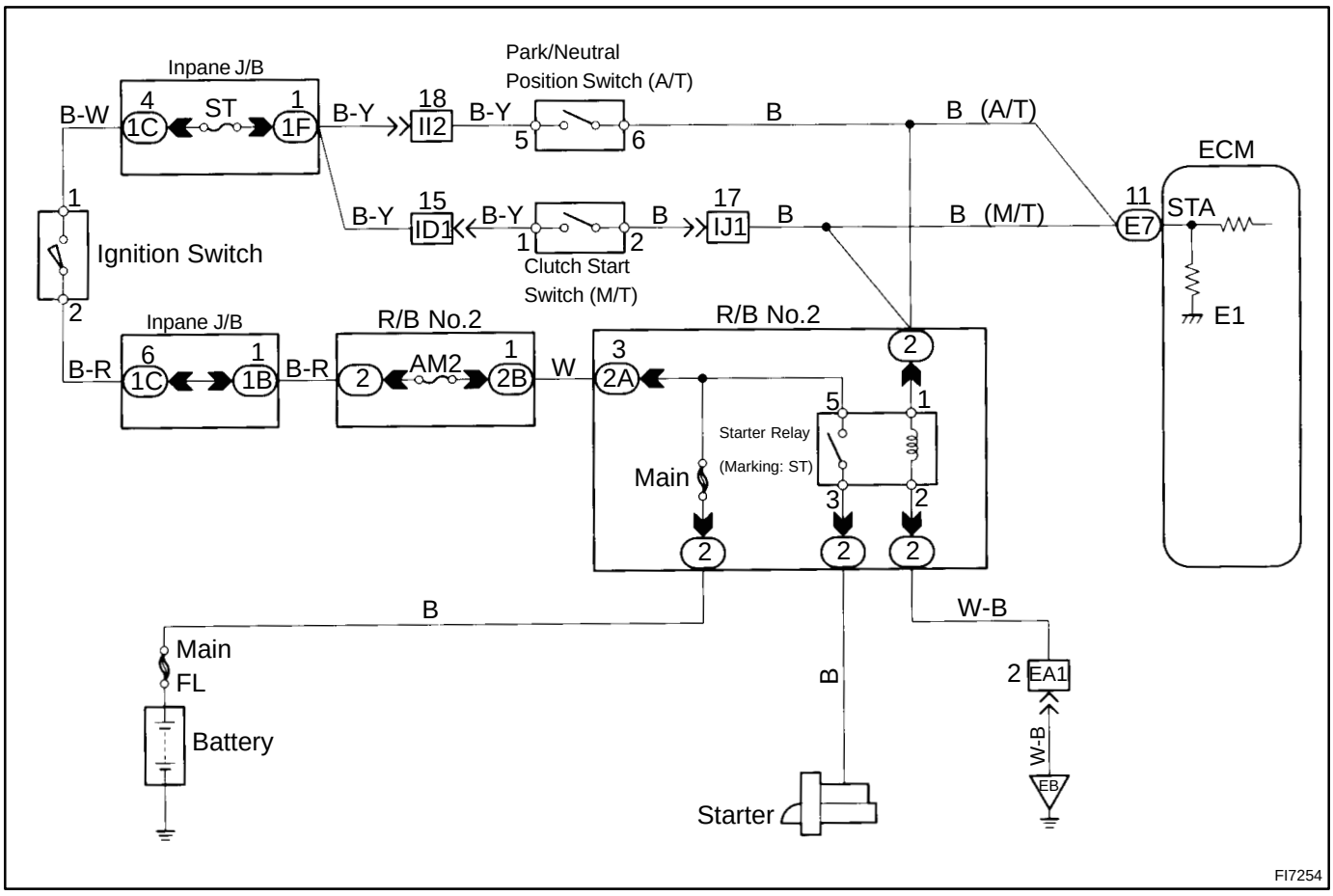

INSPECTION PROCEDURE

HINT:

This diagnostic chart is based on the premise that the engine is cranked normally. If the engine is not cranked, proceed to the matrix chart of problem symptoms on page DI-127 .

1	**Connect the TOYOTA hand-held tester and check STA signal.**

PREPARATION:

(a) Connect the TOYOTA hand-held tester to the DLC3.

(b) Turn ignition switch ON and push TOYOTA hand-held tester main switch ON.

CHECK:

Read STA signal on the TOYOTA hand-held tester while starter operates.

OK:

Ignition Switch Position	ON	START
STA Signal	OFF	ON

OK → **Proceed to next circuit inspection shown on matrix chart (See page DI-127).**

NG

2	**Check for open in harness and connector between ECM and starter relay (Marking: ST) (See page IN-28).**

NG → **Repair or replace harness or connecter.**

OK

Check and replace ECM (See page IN-28).

DI98R-01

DTC	P1500	Starter Signal Circuit Malfunction

CIRCUIT DESCRIPTION

When the engine is cranked, the intake air flow is slow, so fuel vaporization is poor. A rich mixture is therefor necessary in order to achieve good start ability. While the engine is being cranked, the battery positive voltage is applied to terminal STA of the ECM. The starter signal is mainly used to increase the fuel injection volume for the starting injection control and after-start injection control.

DTC No.	DTC Detecting Condition	Trouble Area
P1500	No starter signal to ECM	• Open or short in starter signal circuit • Open or short in ignition switch or starter relay circuit • ECM

HINT:
In this circuit, diagnosis can only be made in the check mode.

WIRING DIAGRAM

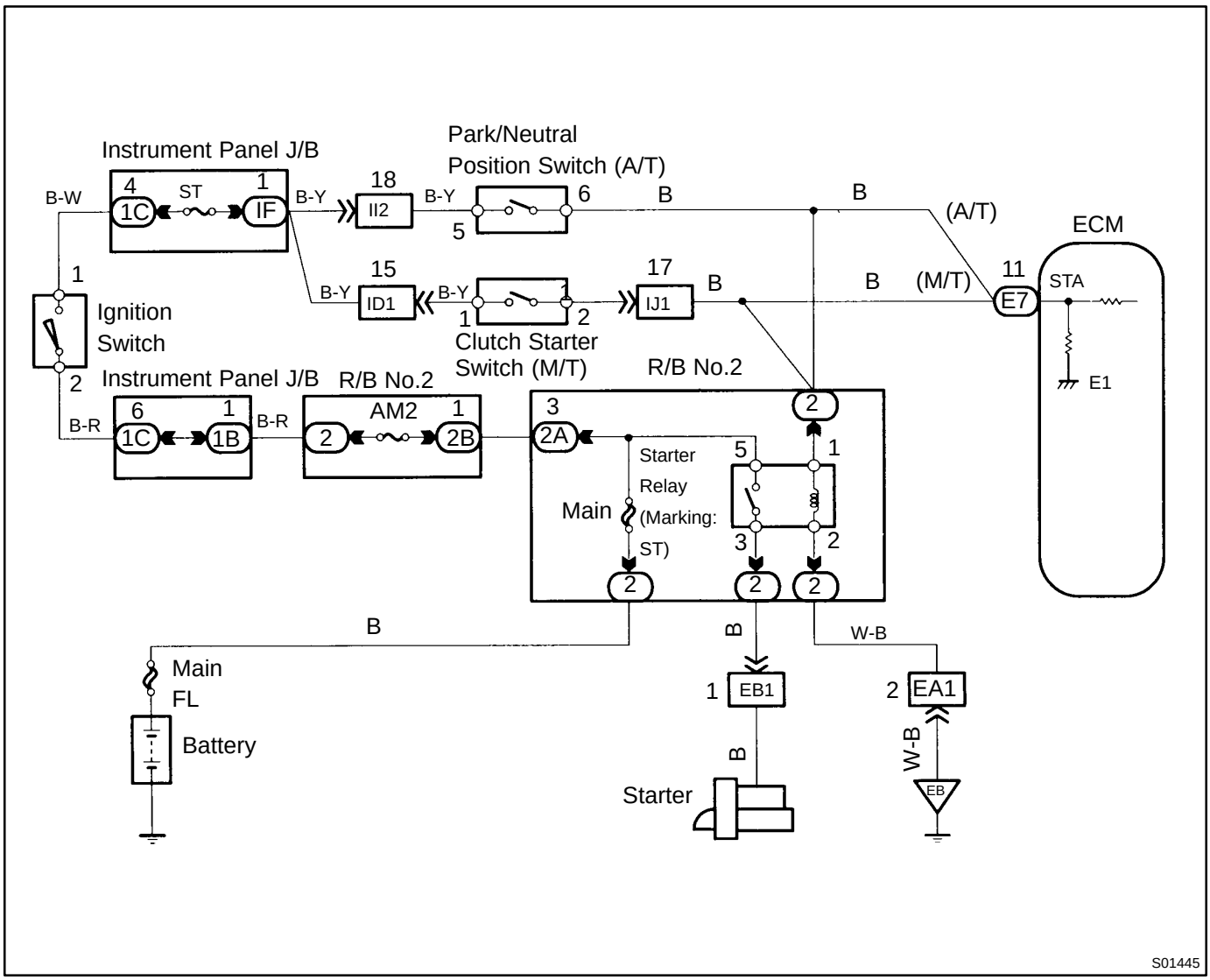

INSPECTION PROCEDURE

HINT:

This diagnostic chart is based on the premise that the engine is cranked normally. If the engine is not cranked, proceed to the matrix chart of problem symptoms page DI-20 .

1	**Connect the TOYOTA hand-held tester and check STA signal.**

PREPARATION:

(a) Connect the TOYOTA hand-held tester to the DLC3.

(b) Turn ignition switch ON and push TOYOTA hand-held tester main switch ON.

CHECK:

Read STA signal on the TOYOTA hand-held tester while starter operates.

OK:

Ignition Switch Position	ON	START
STA Signal	OFF	ON

OK → **Proceed to next circuit inspection shown on matrix chart (See page DI-20).**

NG

2	**Check for open in harness and connector between ECM and starter relay (Marking: ST) (See page IN-28).**

NG → **Repair or replace harness or connector.**

OK

Check and replace ECM (See page IN-28).

DI52E-01

DTC	P1600	ECM BATT Malfunction

CIRCUIT DESCRIPTION

Battery positive voltage is supplied to terminal BATT of the ECM even when the ignition switch is OFF for use by the DTC memory and air-fuel ratio adaptive control value memory, etc.

DTC No.	DTC Detecting Condition	Trouble Area
P1600	Open in back up power source circuit	• Open in back up power source circuit • ECM

WIRING DIAGRAM

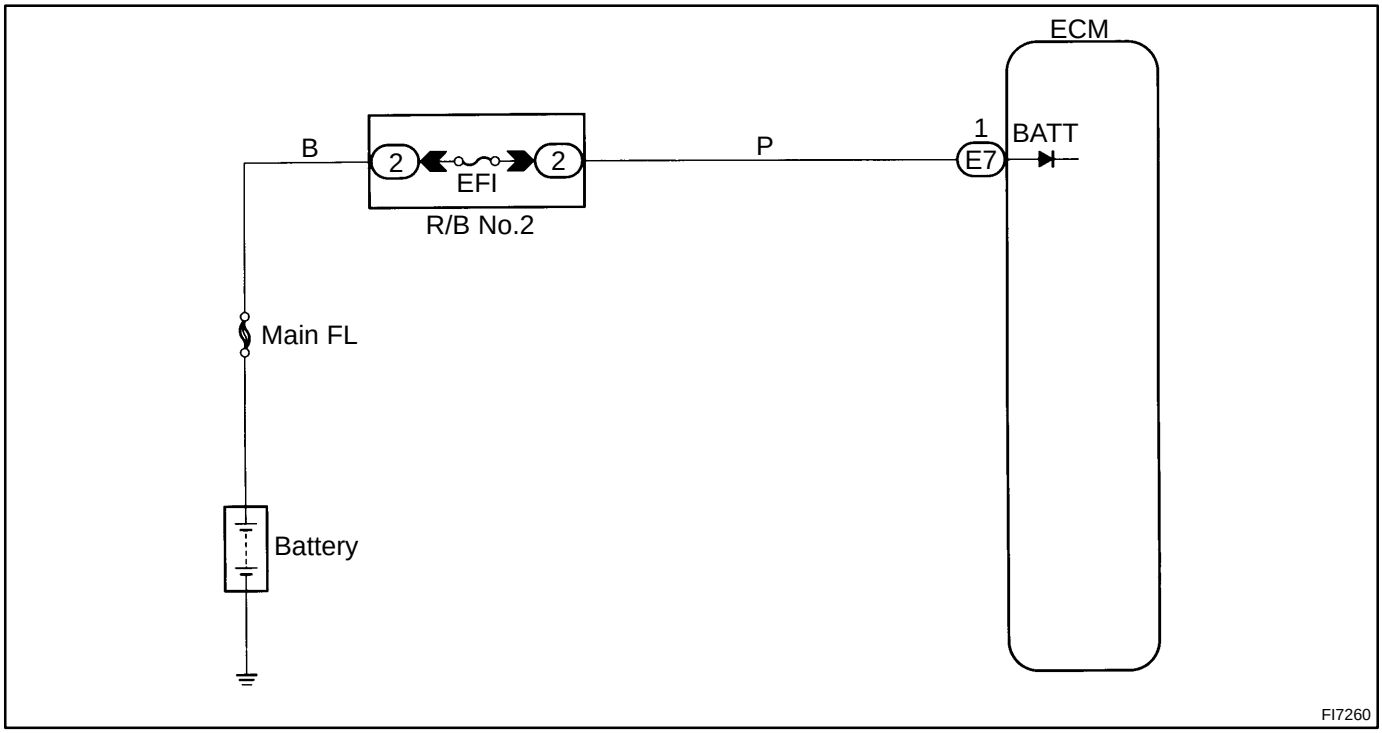

INSPECTION PROCEDURE

1	**Check voltage between terminal BATT of ECM connector and body ground.**

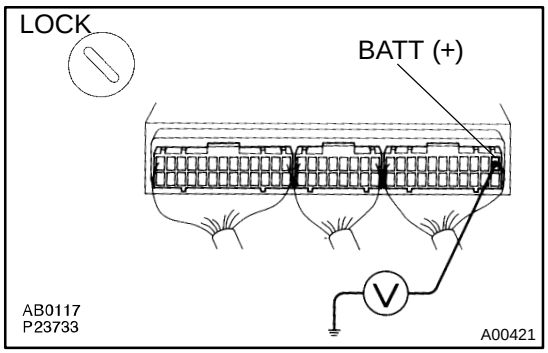

PREPARATION:
Turn up the floor mat on the passenger side.
CHECK:
Measure voltage between terminal BATT of ECM connector and body ground.
OK:
Voltage: 9 - 14 V

OK → **Check and replace ECM (See page IN-28).**

NG

2	**Check EFI fuse.**

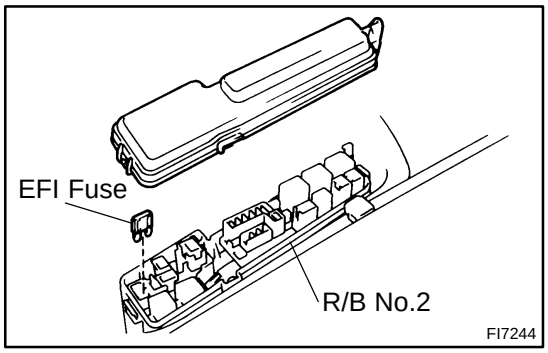

PREPARATION:
Remove EFI fuse from R/B No.2.
CHECK:
Check continuity of EFI fuse.
OK:
Continuity

NG → **Check for short in all the harness and components connected to EFI fuse.**

OK

Check and repair harness or connector between battery, EFI fuse and ECM.

DI51C-01

DTC	P1600	ECM BATT Malfunction

CIRCUIT DESCRIPTION

Battery positive voltage is supplied to terminal BATT of the ECM even when the ignition switch is OFF for use by the DTC memory and air-fuel ratio adaptive control value memory, etc.

DTC No.	DTC Detecting Condition	Trouble Area
P1600	Open in back up power source circuit	• Open in back up power source circuit • ECM

HINT:

If DTC P1600 appear, the ECM does not store another DTC.

WIRING DIAGRAM

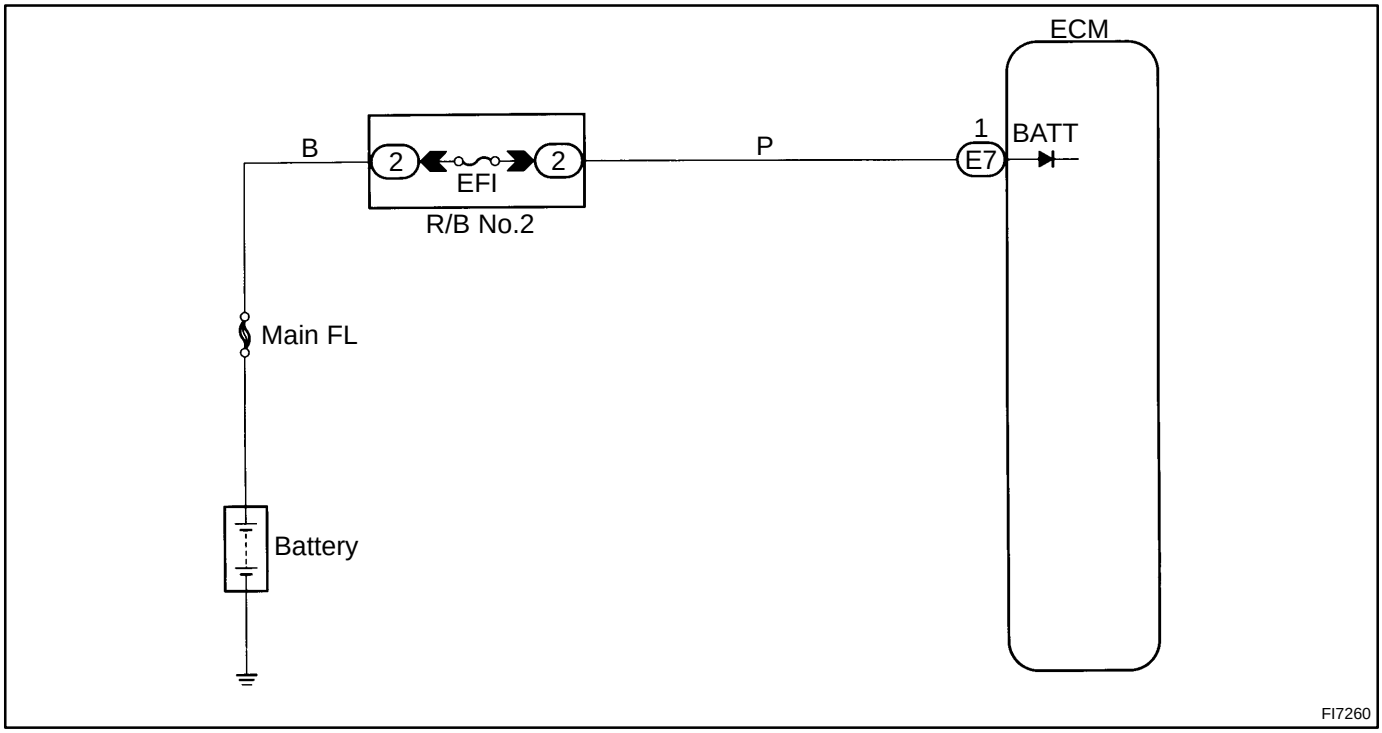

INSPECTION PROCEDURE

1	Check voltage between terminal BATT of ECM connector and body ground.

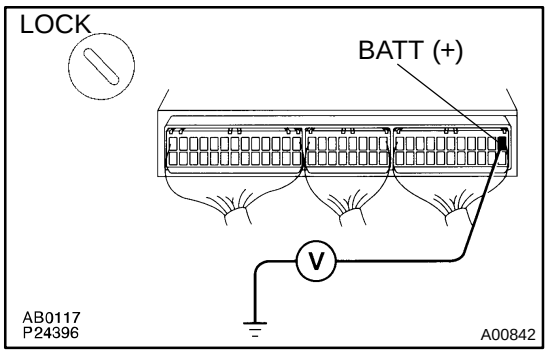

PREPARATION:
Turn up the floor mat on the passenger side.
CHECK:
Measure voltage between terminal BATT of ECM connector and body ground.
OK:
Voltage: 9 - 14 V

OK	Check and replace ECM (See page IN-28).

NG

2	Check EFI fuse.

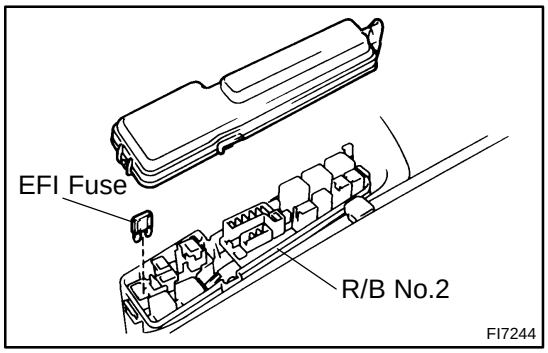

PREPARATION:
Remove EFI fuse from R/B No.2.
CHECK:
Check continuity of EFI fuse.
OK:
Continuity

NG	Check for short in all the harness and components connected to EFI fuse.

OK

Check and repair harness or connector between battery, EFI fuse and ECM (See page IN-28).

DI52F-02

DTC	P1780	Park/Neutral Position Switch Malfunction

CIRCUIT DESCRIPTION

The park/neutral position switch goes on when the shift lever is in the N or P shift position. When it goes on terminal NSW of the ECM is grounded to body ground via the starter relay thus the terminal NSW voltage becomes 0 V. When the shift lever is in the D, 2, L or R position, the park/neutral position switch goes off, so the voltage of ECM terminal NSW becomes battery positive voltage, the voltage of the ECM internal power source.

If the shift lever is moved from the N position to the D position, this signal is used for air-fuel ratio correction and for idle speed control (estimated control), etc.

DTC No..	DTC Detecting Condition	Trouble Area
P1780	Two or more switches are ON simultaneously for "N", "2", "L"and "R" position (2 trip detection logic)	• Short in park/neutral position switch circuit • Park/neutral position switch • ECM
	When driving under conditions (a) and (b) for 30 sec. or more the park/neutral position switch is ON (N position): (2 trip detection logic) (a) Vehicle speed: 80 km/h (50 mph) or more (b) Engine speed: 2,000 - 5,000 rpm	

HINT:

After confirming DTC P1780, use the TOYOTA hand-held tester to confirm the PNP switch signal from "CURRENT DATA".

WIRING DIAGRAM

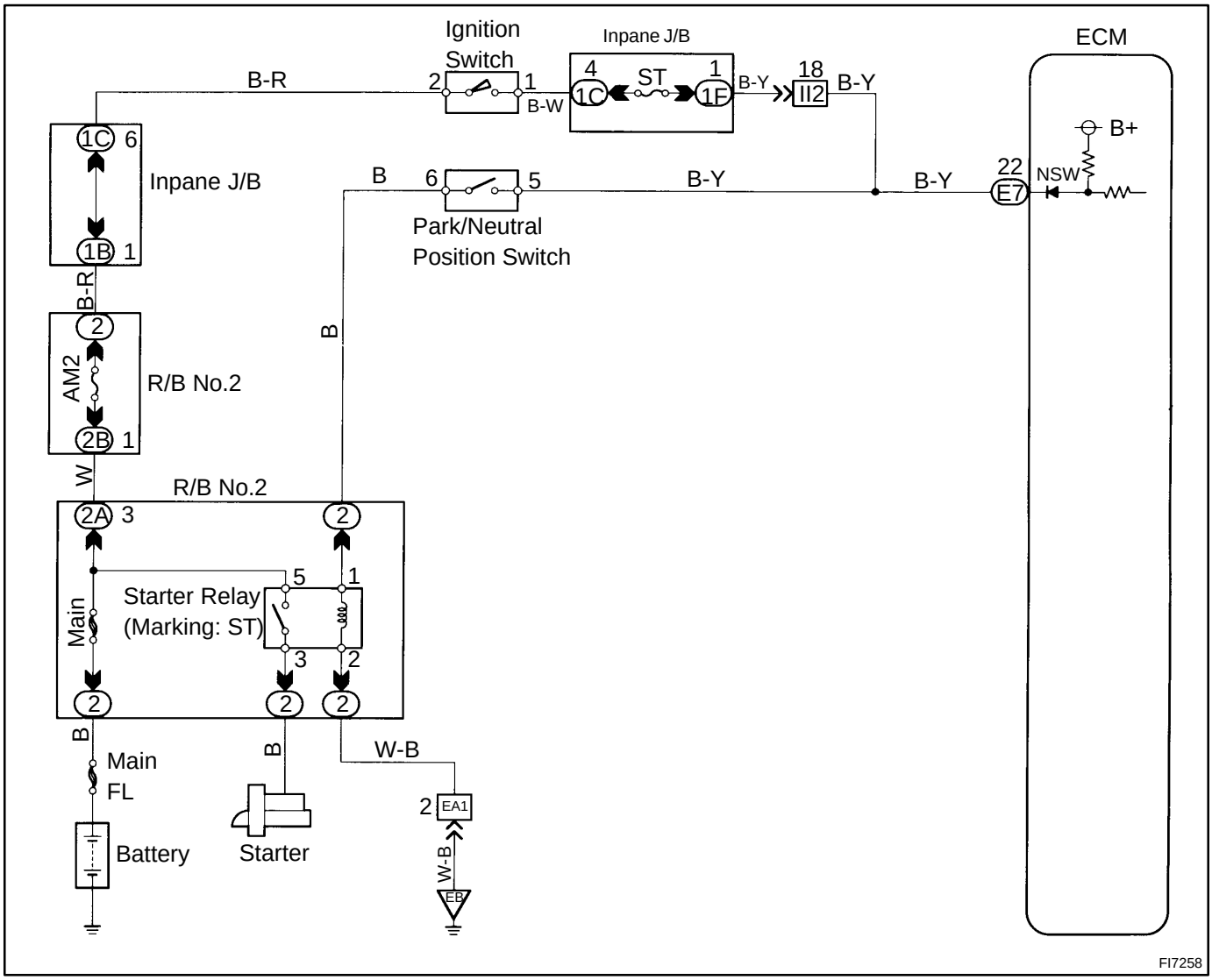

INSPECTION PROCEDURE

1	Check park/neutral position switch.

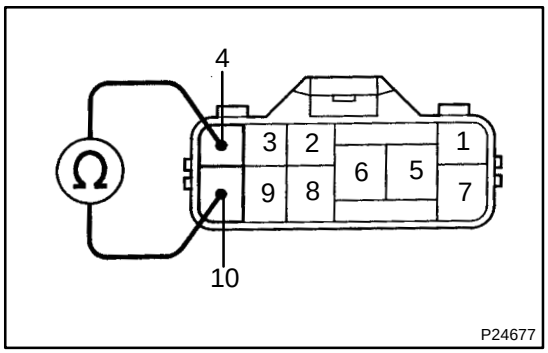

PREPARATION:
Disconnect park/neutral position switch connecter.
CHECK:
Check continuity between each terminal shown below when the shift lever is positioned to each range.
OK:

Shift Position	Terminal No. to continuity	
P	4 - 7	5 - 6
R	4 - 8	-
N	4 - 10	5 - 6
D	4 - 9	-
2	2 - 4	-
L	3 - 4	-

NG → **Replace park/neutral position switch.**

OK ↓

2	Check voltage between terminal NSW of ECM connector and body ground.

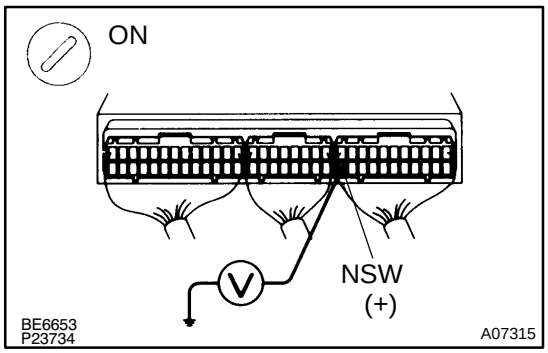

PREPARATION:
(a) Turn up the floor mat on the passenger side.
(b) Turn ignition switch ON.
CHECK:
Measure voltage between terminal NSW of ECM connector and body ground after the shift lever is moved to the following positions.
OK:

Shift lever position	P or N	L, 2, D or R
Voltage	0 - 3 V	9 - 14 V

OK → **Check and replace ECM (See page IN-28).**

NG ↓

Check for open and short in harness and connector between ECM and park/neutral position switch (See page IN-28).

DI51D-01

DTC	P1780	Park/Neutral Position Switch Malfunction

CIRCUIT DESCRIPTION

The park/neutral position switch goes on when the shift lever is in the N or P shift position. When it goes on terminal NSW of the ECM is grounded to body ground via the starter relay thus the terminal NSW voltage becomes 0 V. When the shift lever is in the D, 2, L, or R position, the park/neutral position switch goes off, so the voltage of ECM. Terminal NSW becomes battery positive voltage, the voltage of the ECM internal power source.

If the shift lever is moved from the N position to the D position, this signal is used for air-fuel ratio correction and for idle speed control (estimated control), etc.

DTC No.	DTC Detecting Condition	Trouble Area
P1780	When driving under conditions (a) and (b) for 30 sec. or more the park/neutral position switch is ON (N position): (2 trip detection logic) (a) Vehicle speed: 80 km/h (50 mph) or more (b) Engine speed: 1,500 - 5,000 rpm	• Short in park/neutral position switch circuit • Park/neutral position switch • ECM

HINT:

After confirming DTC P1780 use the TOYOTA hand-held tester to confirm the PNP switch signal from ”CURRENT DATA”.

WIRING DIAGRAM

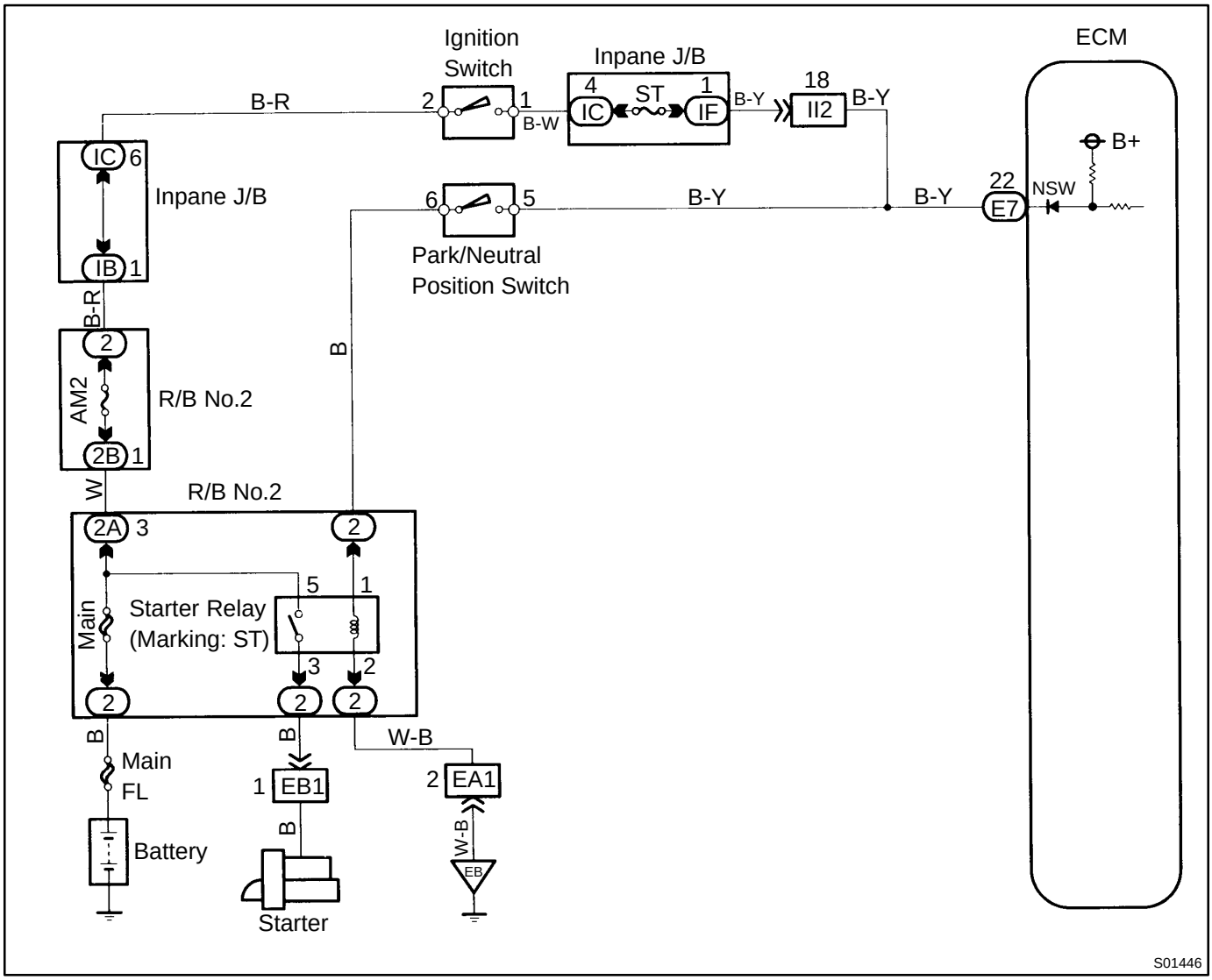

INSPECTION PROCEDURE

1	Check park/neutral position switch.

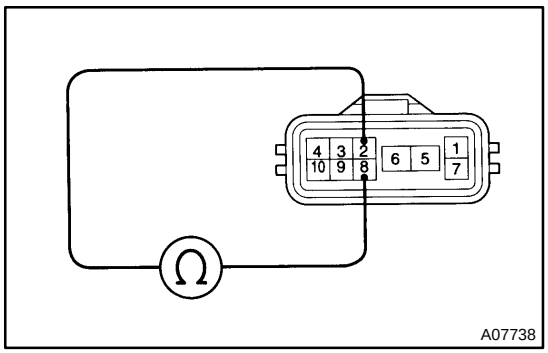

PREPARATION:
Disconnect park/neutral position switch connector.
CHECK:
Check continuity between each terminal shown below when the shift lever is positioned to each range.

Shift Position	Terminal No. to continuity	Terminal No. to continuity
P	2 - 7	5 - 6
R	2 - 8	-
N	2 - 9	5 - 6
D	2 - 10	-
2	2 - 3	-
L	2 - 4	-

NG → **Replace the park/neutral position switch.**

OK ↓

2	Check voltage between terminal NSW of ECM connector and body ground.

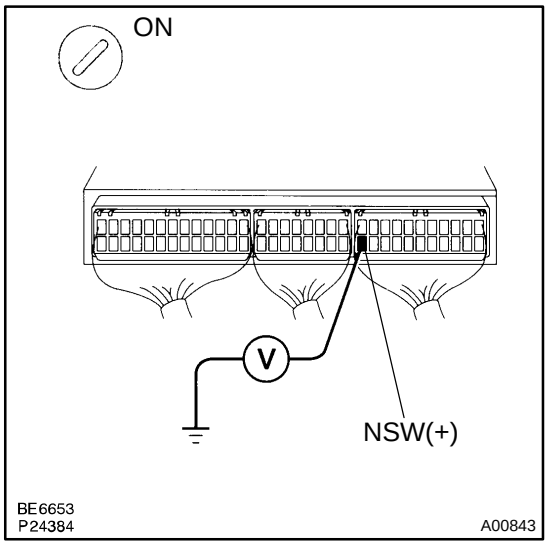

PREPARATION:
(a) Turn up the floor mat on the passenger side.
(b) Turn ignition switch ON.
CHECK:
Measure voltage between terminal NSW of ECM connector and body ground after the shift lever is moved to the following positions.
OK:

Shift lever position	P or N	L, 2, D or R
Voltage	0 - 3 V	9 - 14 V

OK → **Check and replace ECM (See page IN-28).**

NG ↓

Check for open and short in harness and connector between ECM and park/neutral position switch (See page IN-28).

DI52W-02

DTC	P1780	Park/Neutral Position Switch Malfunction

CIRCUIT DESCRIPTION

The park/neutral position switch detects the shift lever position and sends signals to the ECM.
The ECM receives signals (NSW, R, 2 and L) from the park/neutral position switch. When the signal is not sent to the ECM from the park/neutral position switch, the ECM judges that the shift lever is in D position.

DTC No.	DTC Detection Condition	Trouble Area
P1780	2 or more switches are ON simultaneously for N, R, 2 and L position. (2 trip detection logic)	• Short in park/neutral position switch circuit • Park/neutral position switch • ECM
	When driving under conditions (a), (b) and (c) for 30 seconds or more, the park/neutral position switch is ON (N position). (2 trip detection logic) (a) Vehicle speed: 80 km/h (50 mph) or more (b) Engine speed: 2,000 - 5,000 rpm (c) Manifold absolute pressure: 410 mmHg or more	

WIRING DIAGRAM

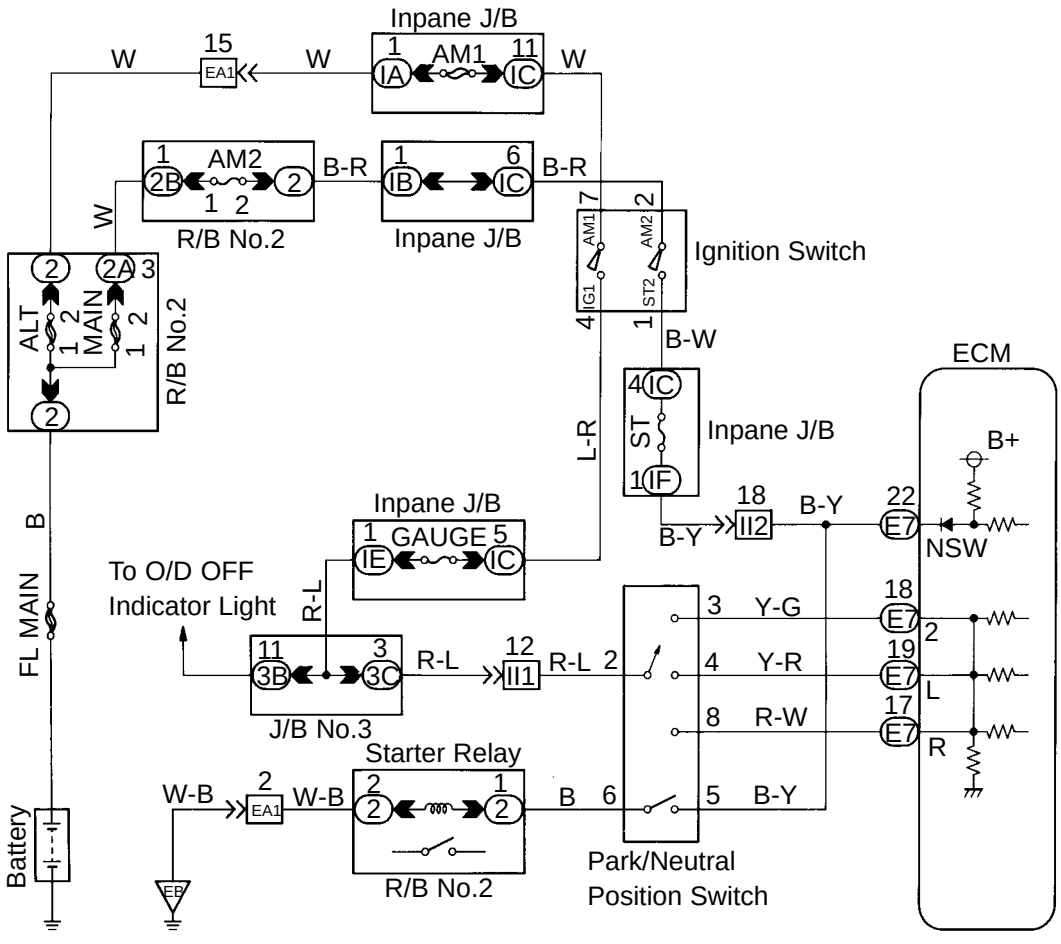

Q08742

INSPECTION PROCEDURE

1	**Read PNP SW, REVERSE, 2ND and LOW signals.**

When using TOYOTA hand-held tester:

PREPARATION:

(a) Connect the TOYOTA hand-held tester to the DLC3.

(b) Turn the ignition switch ON and TOYOTA hand-held tester main switch ON.

CHECK:

Shift the shift lever to the P, R, N, 2 and L positions, and read the PNP SW, REVERSE, 2ND and LOW signals on the TOYOTA hand-held tester.

OK:

Shift position	Signal
2	2ND OFF → ON
L	LOW OFF → ON
R	REVERSE OFF → ON
P,N	PNP SW OFF → ON

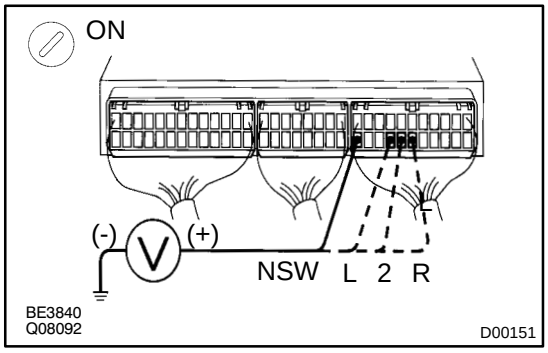

When not using TOYOTA hand-held tester:

PREPARATION:

Turn the ignition switch ON.

CHECK:

Measure voltage between terminals NSW, R, 2, L of ECM and body ground when the shift lever is shifted to the following positions.

OK:

Position	NSW-Body ground	R-Body ground	2-Body ground	L-Body ground
P, N	0 V	0 V	0 V	0 V
R	7.5 - 14 V*	7.4 - 14 V*	0 V	0 V
D	7.5 - 14 V	0 V	0 V	0 V
2	7.5 - 14 V	0 V	7.5 - 14 V	0 V
L	7.5 - 14 V	0 V	0 V	7.5 - 14 V

*: The voltage will drop slightly due to lighting up of the back up light.

OK → **Check and replace ECM.**

NG

2	Check park/neutral position switch.

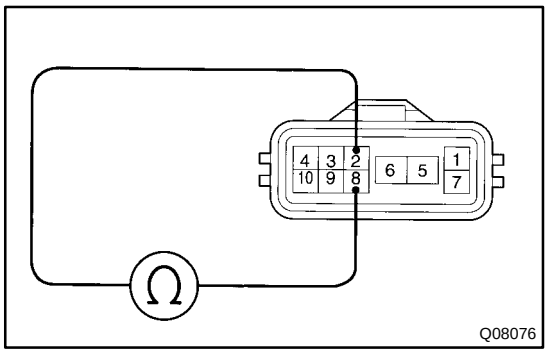

PREPARATION:

(a) Jack up the vehicle.

(b) Disconnect the park/neutral position switch connector.

CHECK:

Check continuity between each terminal shown below when the shift lever is moved to each position.

Shift Position	Terminal No. to continuity	
P	2 - 7	5 - 6
R	2 - 8	-
N	2 - 7.5	5 - 6
D	2 - 10	-
2	2 - 3	-
L	2 - 4	-

NG → **Replace park/neutral position switch.**

OK

Repair or replace harness and connector.

DI53C-02

DTC	P1780	Park/Neutral Position Switch Malfunction

CIRCUIT DESCRIPTION

The park/neutral position switch detects the shift lever position and sends signals to the ECM.
The ECM receives signals (NSW, R, 2 and L) from the park/neutral position switch. When the signal is not sent to the ECM from the park/neutral position switch, the ECM judges that the shift lever is in the D position.

DTC No.	DTC Detection Condition	Trouble Area
P1780	2 or more switches are ON simultaneously for N, R, 2 or L position. (2 trip detection logic)	• Short in park/neutral position switch circuit • Park/neutral position switch • ECM
	When driving under conditions (a), (b) and (c) for 30 seconds or more, the park/neutral position switch is ON (N position). (2 trip detection logic) (a) Vehicle speed: 80 km/h (50 mph) or more (b) Engine speed: 2,000 - 5,000 rpm (c) Manifold absolute pressure: 300 mmHg or more	

WIRING DIAGRAM

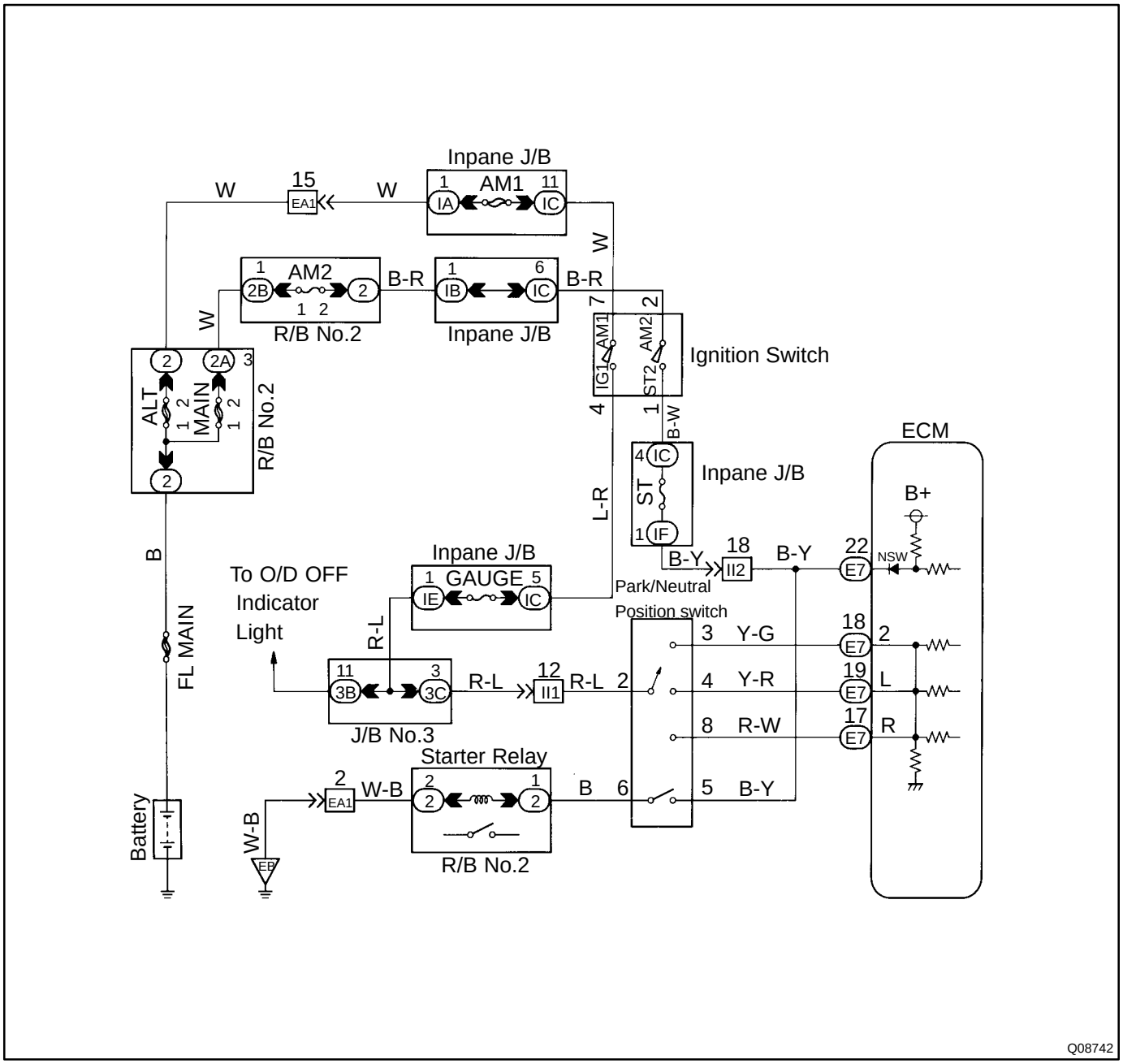

INSPECTION PROCEDURE

1	**Check PNP SW, REVERSE, 2ND and LOW signal.**

When using TOYOTA hand-held tester:

PREPARATION:

(a) Connect the TOYOTA hand-held tester to the DLC3.

(b) Turn the ignition switch ON and TOYOTA hand-held tester main switch ON.

CHECK:

Shift the shift lever to the P, R, N, 2 and L positions, and read the PNP SW, REVERSE, 2ND and LOW signal on the TOYOTA hand-held tester.

OK:

Shift position	Signal
P, N	PNP SW OFF → ON
R	REVERSE OFF → ON
2	2ND OFF → ON
L	LOW OFF → ON

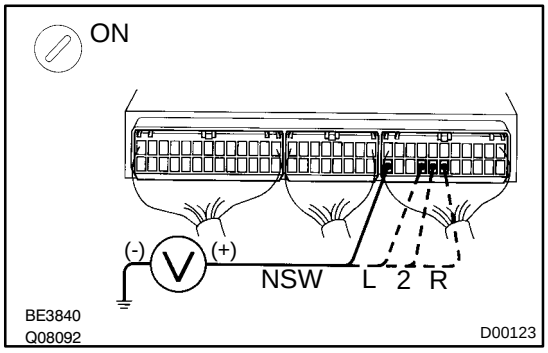

When not using TOYOTA hand-held tester:

PREPARATION:

Turn the ignition switch ON.

CHECK:

Measure voltage between terminals NSW, R, 2, L of ECM and body ground when the shift lever is shifted to the following positions.

OK:

Position	NSW-Body ground	R-Body ground	2-Body ground	L-Body ground
P, N	0 V	0 V	0 V	0 V
R	7.5 - 14 V*	7.5 - 14 V*	0 V	0 V
D	7.5 - 14 V	0 V	0 V	0 V
2	7.5 - 14 V	0 V	7.5 - 14 V	0 V
L	7.5 - 14 V	0 V	0 V	7.5 - 14 V

*: The voltage will drop slightly due to lighting up of the back up light.

OK → **Check and replace ECM.**

NG

2	Check park/neutral position switch.

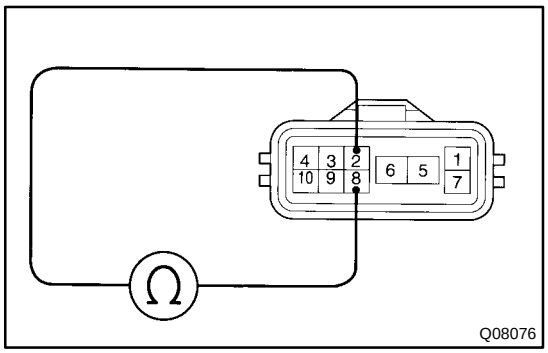

PREPARATION:

(a) Jack up the vehicle.

(b) Disconnect the park/neutral position switch connector.

CHECK:

Check continuity between each terminal shown below when the shift lever is moved to each position.

Shift Position	Terminal No. to continuity	
P	2 - 7	5 - 6
R	2 - 8	-
N	2 - 9	5 - 6
D	2 - 10	-
2	2 - 3	-
L	2 - 4	-

NG → **Replace park/neutral position switch.**

OK

Repair or replace harness and connector.

DI54X-01

Park/Neutral Position Switch Circuit

CIRCUIT DESCRIPTION

When the shift position is put in except D position, a signal is sent from the park/neutral position switch to the ECU. When this signal is input during cruise control driving, the ECU cancels the cruise control.

WIRING DIAGRAM

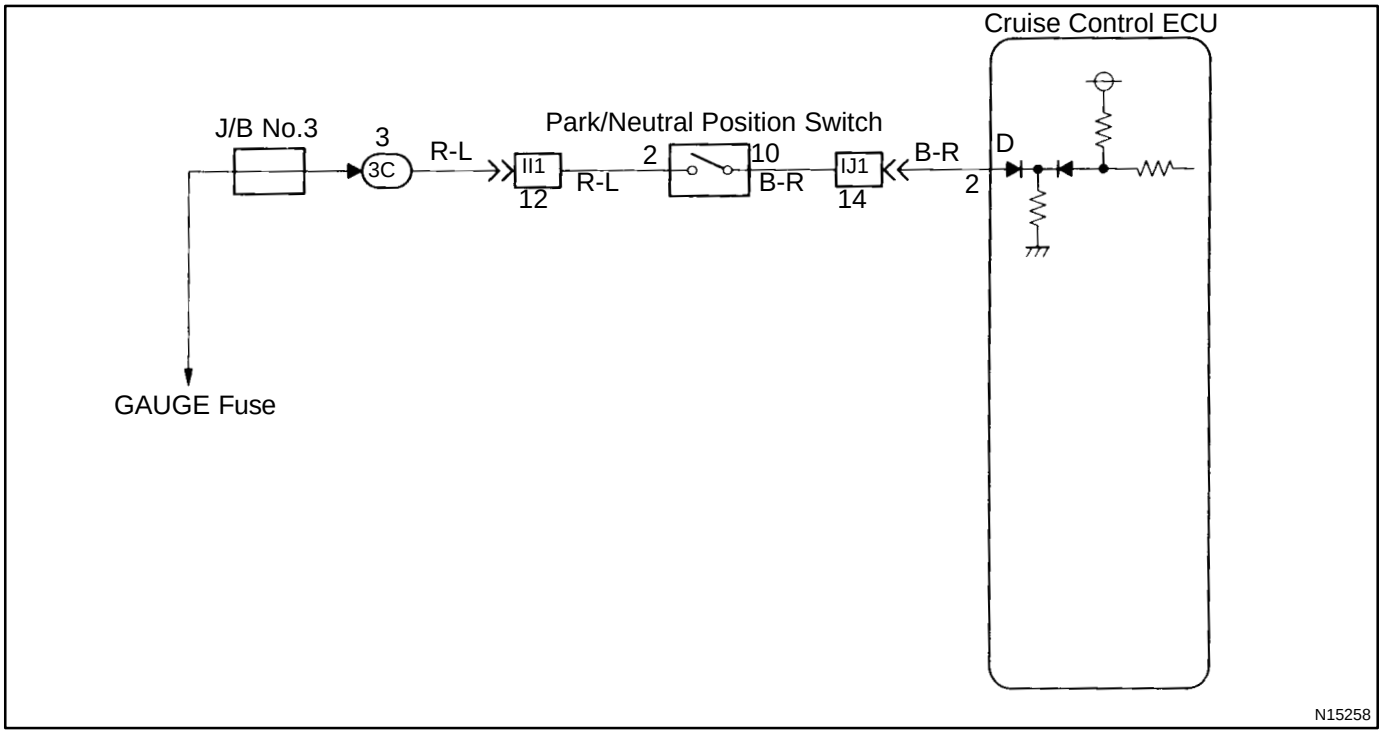

INSPECTION PROCEDURE

1	**Check operation of starter.**

CHECK:

Check that the starter operates normally and that the engine starts.

NG → **Proceed to engine troubleshooting.**

OK

2	Input signal check.

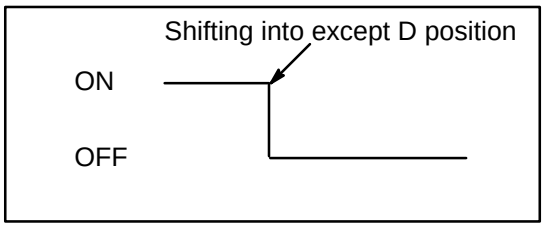

PREPARATION:

(a) See input signal check on page DI-413 .

(b) Check the indicator light when shifting into except D position.

OK:

The indicator light goes off when shifting into except D position.

OK → **Proceed to next circuit inspection shown on matrix chart (See page DI-421).**

NG

3	Check voltage between terminal D of ECU connector and body ground.

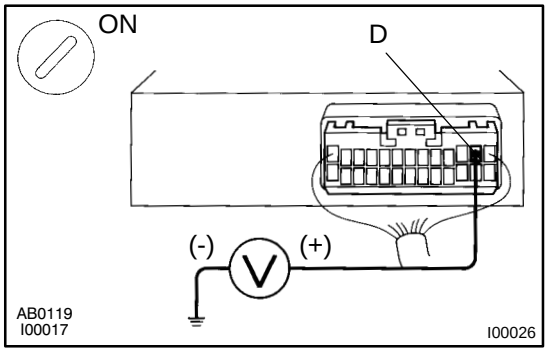

PREPARATION:

Remove ECU with connectors still connected.

CHECK:

(a) Turn ignition switch ON.

(b) Measure voltage between terminal D of ECU connector and body ground, when shifting into D position and other positions.

OK:

Shift Position	Voltage
D position	10 - 16 V
Other positions	Below 1 V

OK → **Proceed to next circuit inspection shown on matrix chart (See page DI-421).**

NG

4	**Check for open in harness and connector between ECU and GAUGE fuse (See page IN-28).**

NG → **Repair or replace harness or connector.**

OK

Check and replace ECU.

DI54F-02

SRS Warning Light Circuit Malfunction (Always lit up, when ignition switch is in LOCK position.)

CIRCUIT DESCRIPTION

The SRS warning light is located on the combination meter.
When the SRS is normal, the SRS warning light lights up for approx. 6 seconds after the ignition switch is turned from LOCK position to ACC or ON position, and then turns off automatically.
If there is malfunction in the SRS, the SRS warning light lights up to inform the driver of the abnormality.
When terminals Tc and E1 of the DLC 1 are connected, the DTC is displayed by the blinking of the SRS warning light.

WIRING DIAGRAM

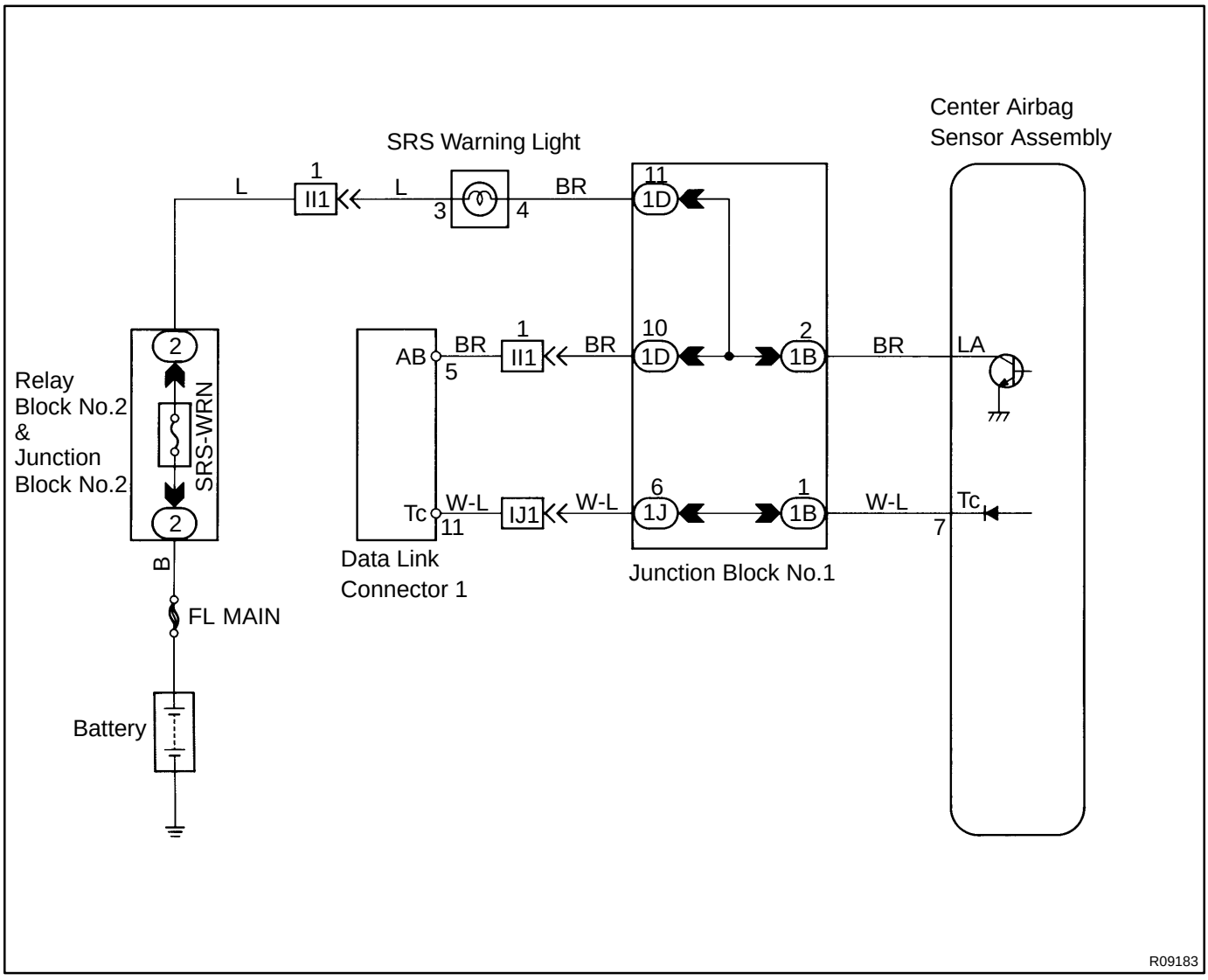

INSPECTION PROCEDURE

1	Preparation

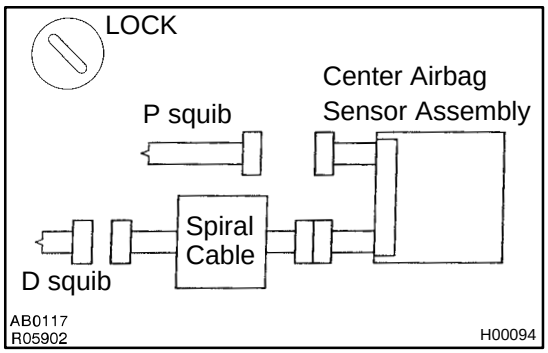

PREPARATION:

(a) Disconnect negative (-) terminal cable from the battery, and wait at least 90 seconds.

(b) Remove the steering wheel pad (See page SR-12 or SR-21).

(c) Disconnect the connector of front passenger airbag assembly (See page RS-21).

CAUTION:

Store the steering wheel pad with the front surface facing upward.

2	Does SRS warning light turn off?

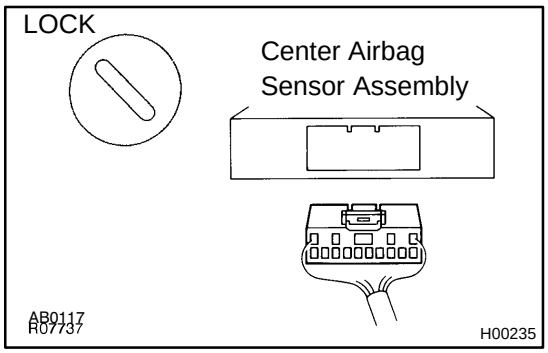

PREPARATION:

(a) Disconnect the center airbag sensor assembly connector.

(b) Connect negative (-) terminal cable to battery.

CHECK:

Check operation of SRS warning light.

NO → **Check SRS warning light circuit or terminal AB circuit of DLC1.**

YES

Replace center airbag sensor assembly.

DI54G-01

SRS Warning Light System Malfunction (Does not light up, when ignition switch is turned to ACC or ON.)

CIRCUIT DESCRIPTION

The SRS waring light is located on the combination meter.
When the SRS is normal, the SRS warning light lights up for approx. 6 seconds after the ignition switch is turned from LOCK position to ACC or ON position, and then turns off automatically.
If there is a malfunction in the SRS, the SRS warning light lights up to infrom the driver of the abnormality.
When terminals Tc and E1 of the DLC1 are connected, the DTC is displayed by the blinking of the SRS waring light.

WIRING DIAGRAM

Refer to page DI-401 for the WIRING DIAGRAM.

INSPECTION PROCEDURE

1	**Check SRS-WRN Fuse.**

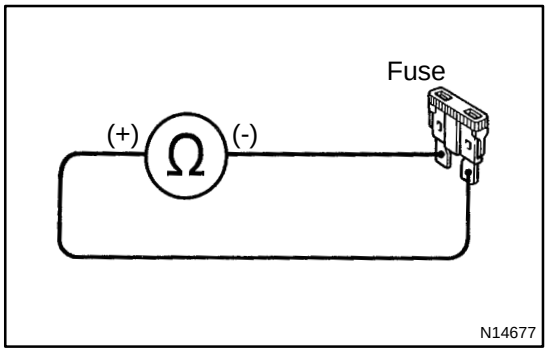

PREPARATION:
Remove the SRS-WRN fuse.
CHECK:
Check the continuity of SRS-WRN fuse.
OK:

Continuity

HINT:

- Fuse may be burnt out even if it appears to be OK during visual inspection.
- If fuse is OK, install it.

NG	**Go to step 5.**

OK

2	**Preparation (See step 1 on page DI-398)**

3	Check SRS warning light circuit.

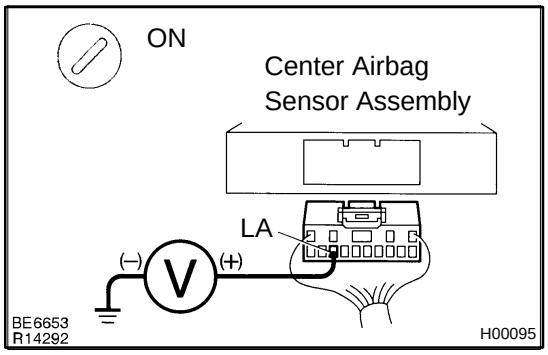

PREPARATION:

(a) Connect negative (-) terminal cable to battery.
(b) Turn the ignition switch to ACC or ON.

CHECK:

Measure the voltage LA terminal of harness side connector of center airbag sensor assembly.

OK:

Voltage: 10 - 14 V

NG → **Check SRS warning light bulb/repair SRS warning light circuit.**

OK

4	Does SRS warning light come on?

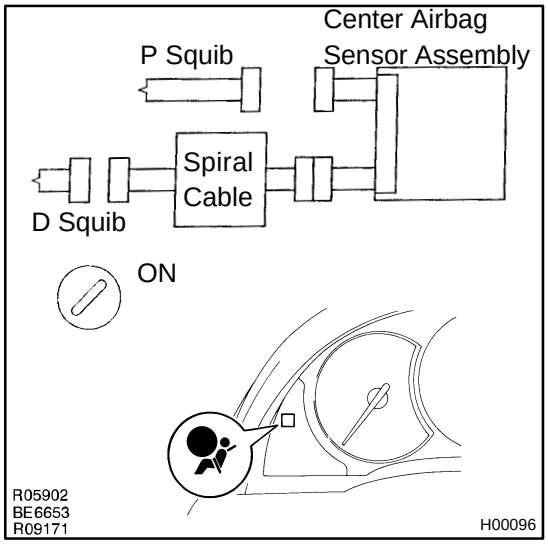

PREPARATION:

(a) Disconnect negative (-) terminal cable from the battery.
(b) Connect the center airbag sensor assembly connector.
(c) Connect negative (-) terminal cable to battery, and wait at least 2 seconds.
(d) Turn the ignition switch to ACC or ON.

CHECK:

Check operation of SRS warning light.

NO → **Check terminal LA of center airbag sensor assembly. If normal, replace center airbag sensor assembly.**

YES

From the results of the above inspection, the malfunctioning part can now be considered normal. To make sure of this, use simulation method to check.

5	**Is new SRS-WRN fuse burnt out again?**

NO → **Using simulation method, reproduce malfunction symptoms (See page IN-18).**

YES

Check harness between SRS-WRN fuse and SRS warning light.

DI985-01

Stop Light Switch Circuit

CIRCUIT DESCRIPTION

The purpose of this circuit is to prevent the engine from stalling, while driving in lock-up condition, when brakes are suddenly applied.

When the brake pedal is operated, this switch sends a signals to the ECM. Then the ECM cancels operation of the lock-up clutch while braking is in progress.

WIRING DIAGRAM

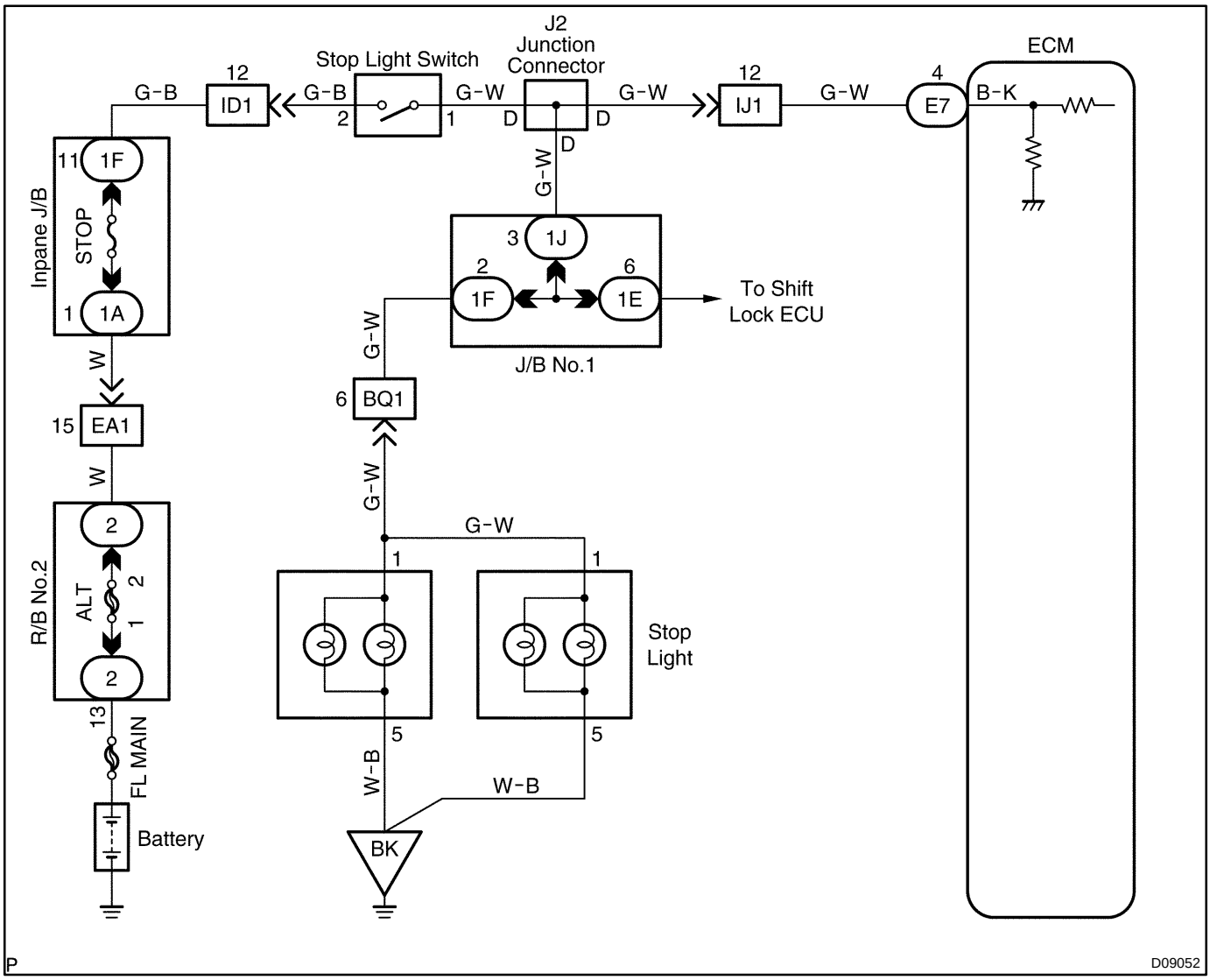

INSPECTION PROCEDURE

1	**Check operation of stop light.**

CHECK:

Check if the stop lights go on and off normally when the brake pedal is operated and released.

NG → **Check and repair stop light circuit.**

OK

2	**Check STP signal.**

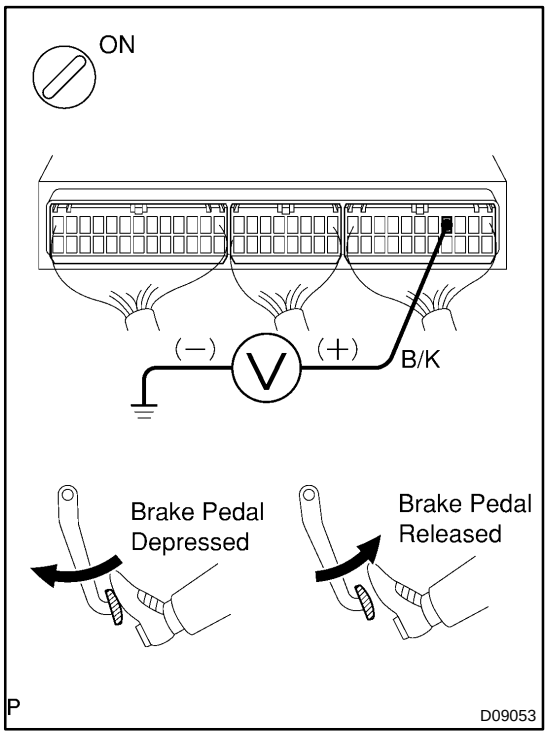

When using OBD II scan tool or TOYOTA hand-held tester:

PREPARATION:

(a) Connect an OBD II scan tool or TOYOTA hand-held tester to the DLC3.

(b) Turn the ignition switch ON and OBD II scan tool or TOYOTA hand-held tester main switch ON.

CHECK:

Read the STP signal on the TOYOTA hand-held tester.

OK:

Brake Pedal	STP Signal
Depressed	ON
Release	OFF

When not using OBD II scan tool or TOYOTA hand-held tester:

PREPARATION:

Turn the ignition switch ON.

CHECK:

Check the voltage between terminal B/K of the ECM connector and body ground.

OK:

Brake Pedal	Voltage
Depressed	7.5 - 14 V
Release	Below 1.5 V

OK	Proceed to next circuit inspection shown on matrix chart (See page DI-276).

NG

3	Check harness and connector between stop light switch and ECM (See page IN-28).

NG	Repair or replace harness or connector.

OK

Check and replace ECM.

DI995-01

Stop Light Switch Circuit

CIRCUIT DESCRIPTION

The purpose of this circuit is to prevent the engine from stalling, while driving in lock-up condition, when brakes are suddenly applied.

When the brake pedal is operated, this switch sends a signals to the ECM. Then the ECM cancels operation of the lock-up clutch while braking is in progress.

WIRING DIAGRAM

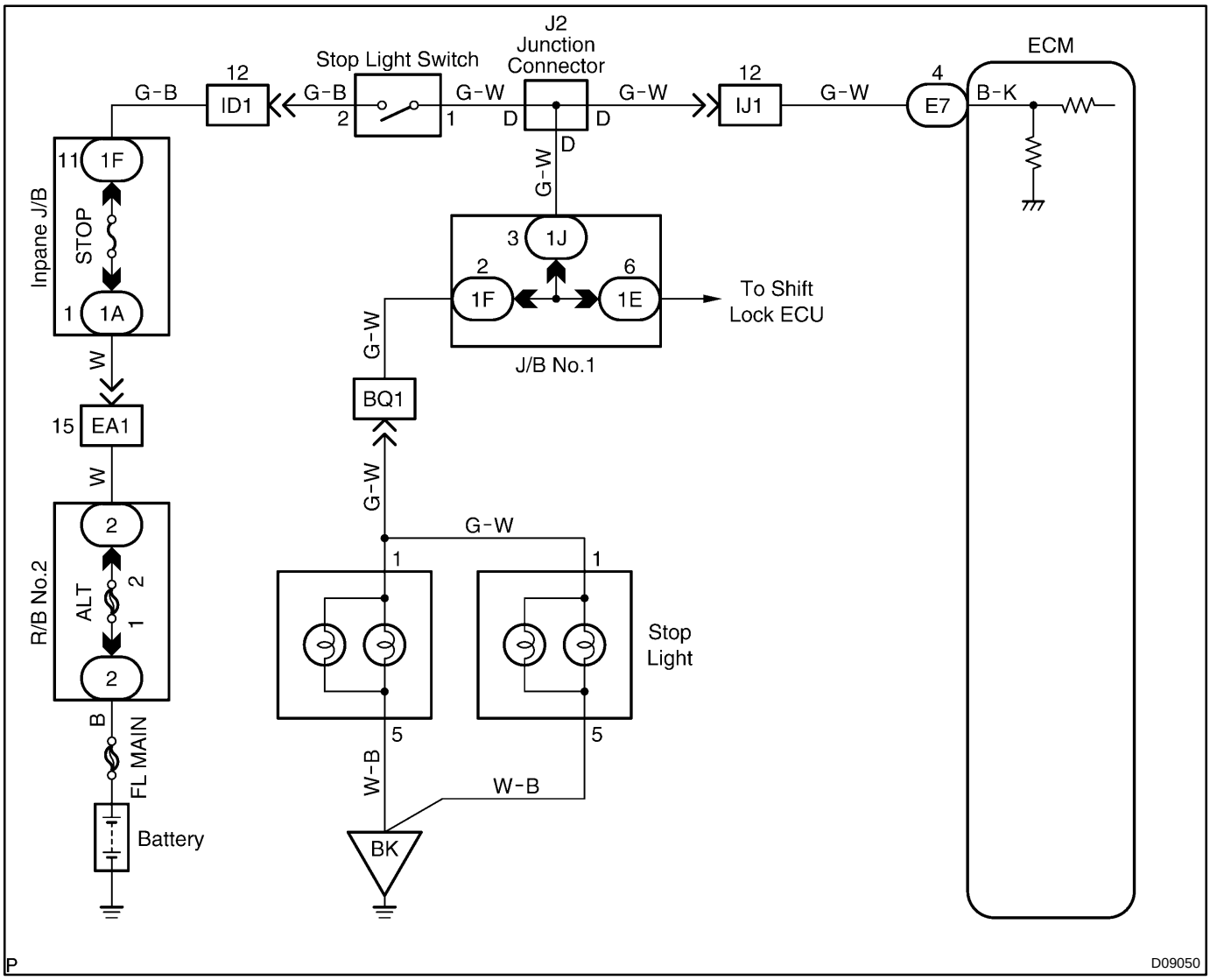

INSPECTION PROCEDURE

1	**Check operation of stop light.**

CHECK:

Check if the stop lights go on and off normally when the brake pedal is operated and released.

NG → **Check and repair stop light circuit.**

OK ↓

2	**Check STP signal.**

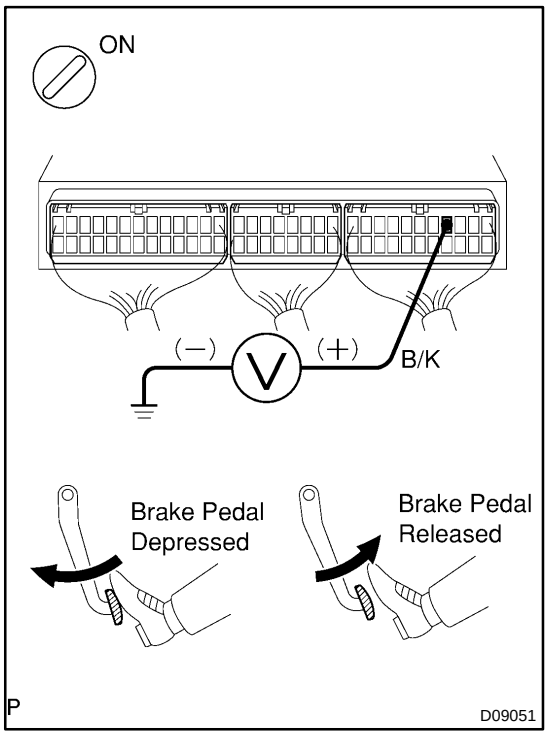

When using OBD II scan tool or TOYOTA hand-held tester:

PREPARATION:

(a) Connect an OBD II scan tool or TOYOTA hand-held tester to the DLC3.

(b) Turn the ignition switch ON and OBD II scan tool or TOYOTA hand-held tester main switch ON.

CHECK:

Read the STP signal on the TOYOTA hand-held tester.

OK:

Brake Pedal	STP Signal
Depressed	ON
Release	OFF

When not using OBD II scan tool or TOYOTA hand-held tester:

PREPARATION:

Turn the ignition switch ON.

CHECK:

Check the voltage between terminal B/K of the ECM connector and body ground.

OK:

Brake Pedal	Voltage
Depressed	7.5 - 14 V
Release	Below 1.5 V

OK	Proceed to next circuit inspection shown on matrix chart (See page DI-233).

NG

3	Check harness and connector between stop light switch and ECM (See page IN-28).

NG	Repair or replace harness or connector.

OK

Check and replace ECM.

DI54U-02

Stop Light Switch Circuit

CIRCUIT DESCRIPTION

When the brake is on, battery positive voltage normally applies through the stop fuse and stop light switch to terminal STP-of the ECU, and the ECU turns the cruise control off.
A fail-safe function is provided so that cancel functions normally, even if there is a malfunction in the stop light signal circuit.
If the harness connected to terminal STP-has an open, terminal STP-will have battery positive voltage and the cruise control will be turned off, also SET not occurring.
Also, when the brake is on, the magnetic clutch is cut electrically by the stop light switch, turning the cruse control off. (See page DI-425 for operation of the magnetic clutch).

WIRING DIAGRAM

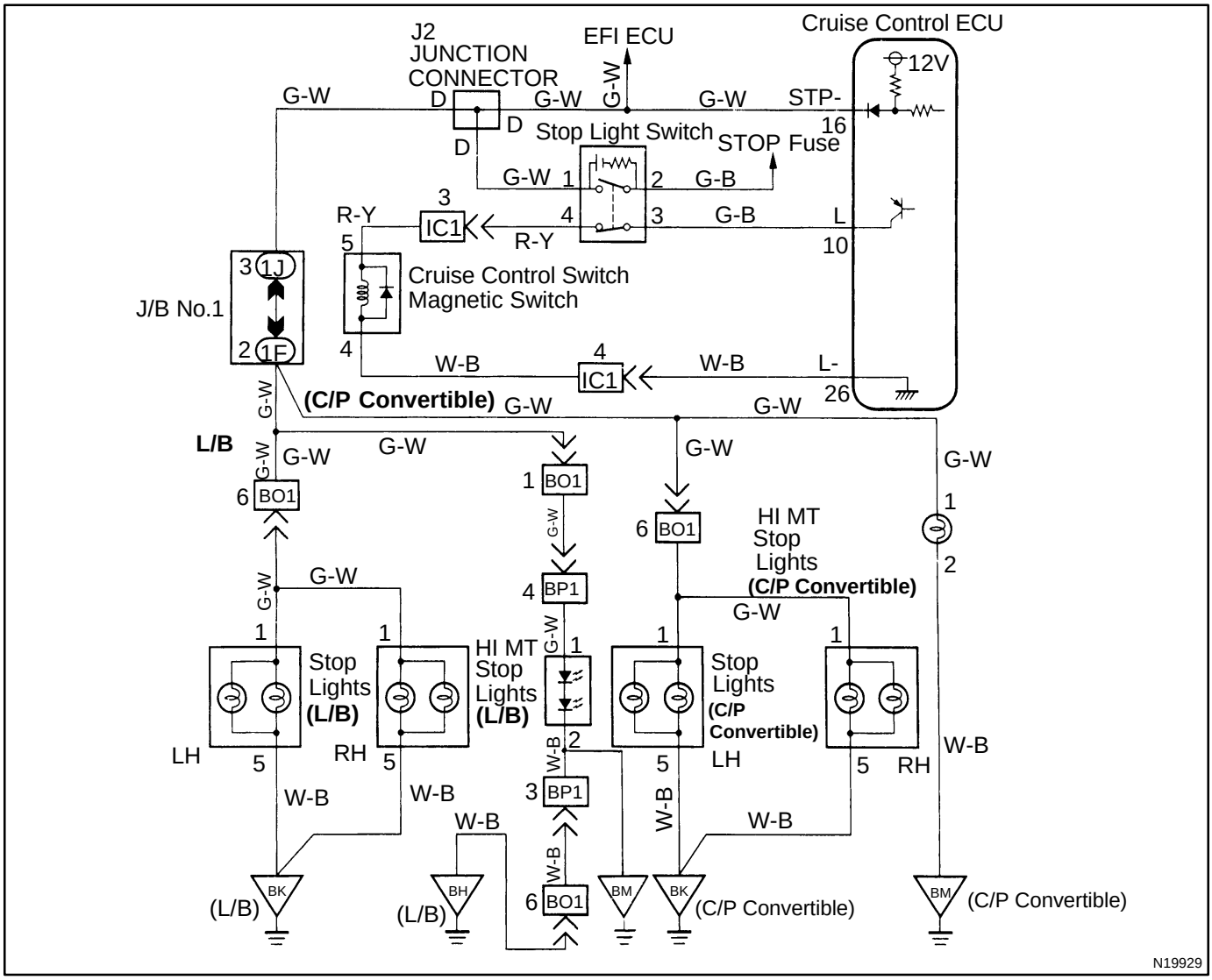

INSPECTION PROCEDURE

1	**Check operation of stop light.**

CHECK:

Check that stop light comes on when brake pedal is depressed, and turns off when brake pedal is released.

NG → **Check stop light circuit.**

OK

2	**Input signal check.**

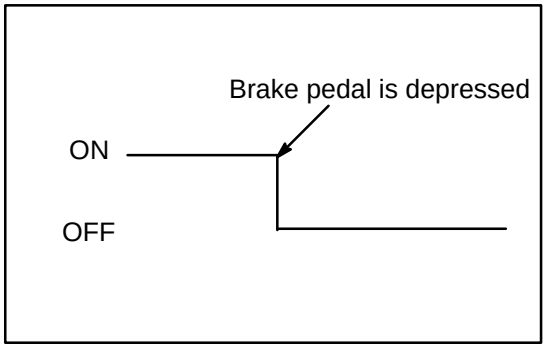

CHECK:

(a) See input signal check on DI-413 .

(b) Check the indicator light when the brake pedal is depressed.

OK:

The indicator light goes off when the brake pedal is depressed.

OK → **Proceed to next circuit inspection shown on matrix chart (See page DI-421).**

NG

3	**Check voltage between terminal, STP- of ECU connector and body ground.**

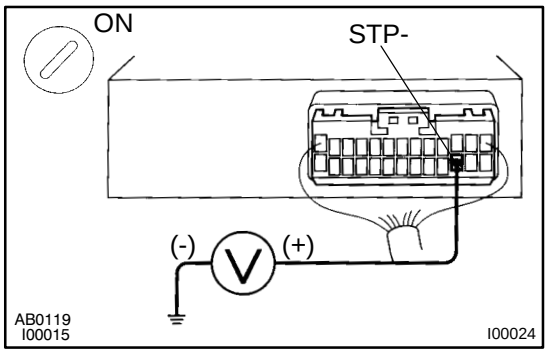

PREPARATION:

Remove ECU with connectors still connected.

CHECK:

(a) Turn ignition switch ON.

(b) Measure voltage between terminal STP- of ECU connector and body ground, when the brake pedal is depressed and released.

OK:

Depressed	10 - 16 V
Released	Below 1 V

OK → **Proceed to next circuit inspection shown on matrix chart (See page DI-421).**

NG

4	**Check for open in harness and connectors between terminal STP- of ECU and stop light switch (See page IN-28).**

NG → **Repair or replace harness or connector.**

OK

Check and replace ECU.

DI53T-02

Stop Light Switch Circuit

CIRCUIT DESCRIPTION

This stop light switch senses whether the brake pedal is depressed or released, and sends the signal to the ECU.

WIRING DIAGRAM

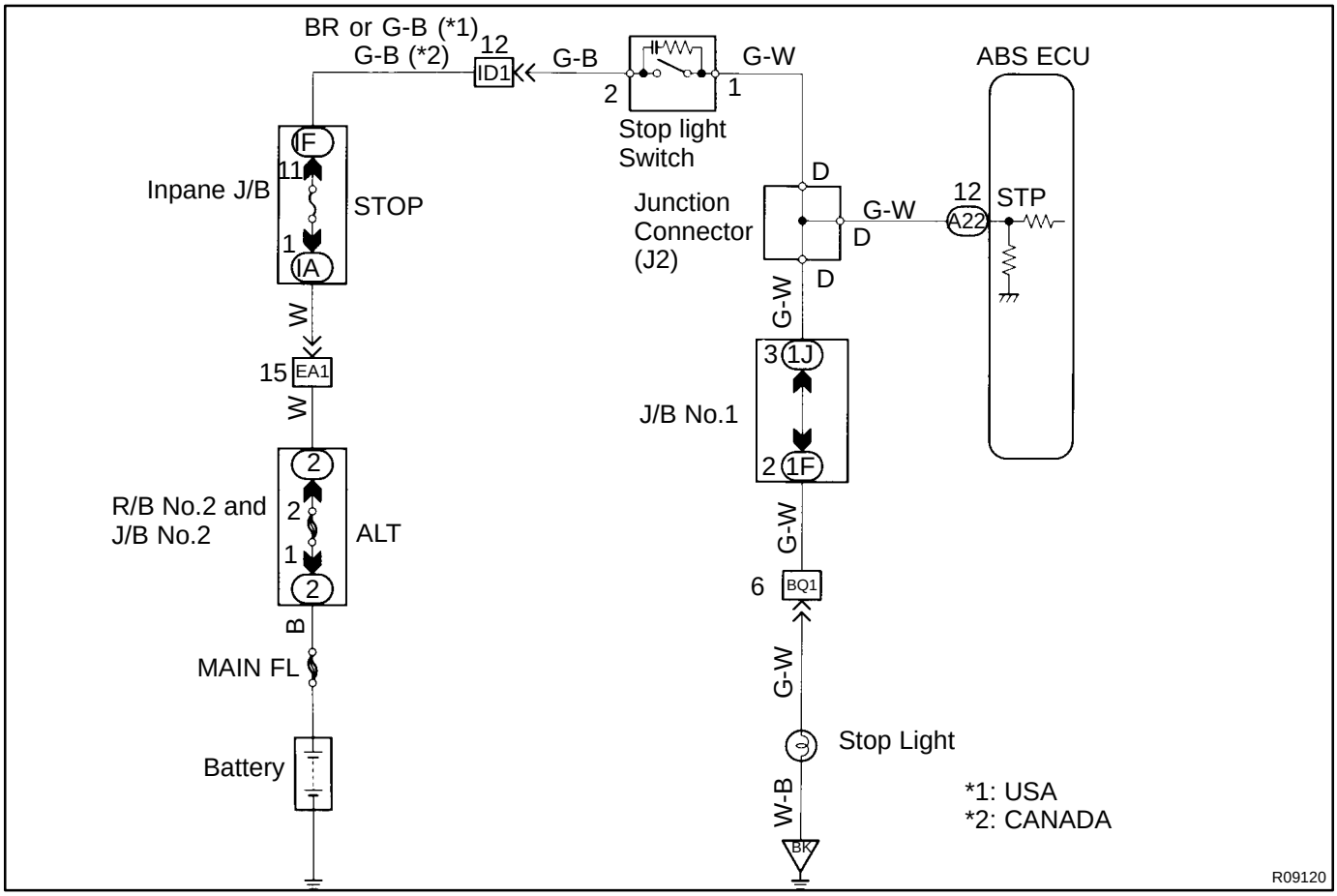

INSPECTION PROCEDURE

1	**Check operation of stop light.**

CHECK:

Check that stop light lights up when brake pedal is depressed and turns off when brake pedal is released.

NG → **Repair stop light circuit (See page BE-30).**

OK

2	Check voltage between terminal STP of ABS ECU and body ground.

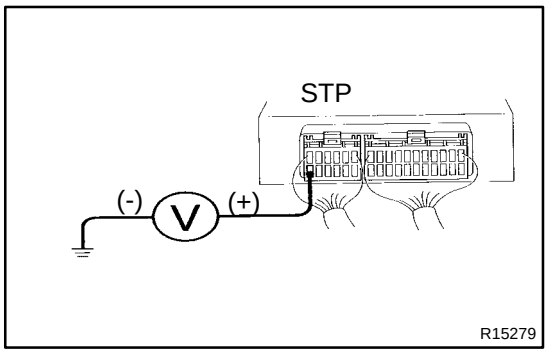

PREPARATION:
Remove ABS ECU with connectors still connected.
CHECK:
Measure voltage between terminal STP of ABS ECU and body ground when brake pedal is depressed.
OK:
Voltage: 8 - 14 V

OK	Proceed to next circuit inspection shown on problem symptoms chart (See page DI-315).

NG

3	Check for open in harness and connector between ABS ECU and stop light switch (See page IN-28).

NG	Repair or replace harness or connector.

OK

Check and replace ABS ECU.

DI54H-02

Tc Terminal Circuit

CIRCUIT DESCRIPTION

By connecting terminals Tc and E1 of the DLC1, the center airbag sensor assembly is set in the DTC output mode. The DTCs are displayed by the blinking of the SRS warning light.

WIRING DIAGRAM

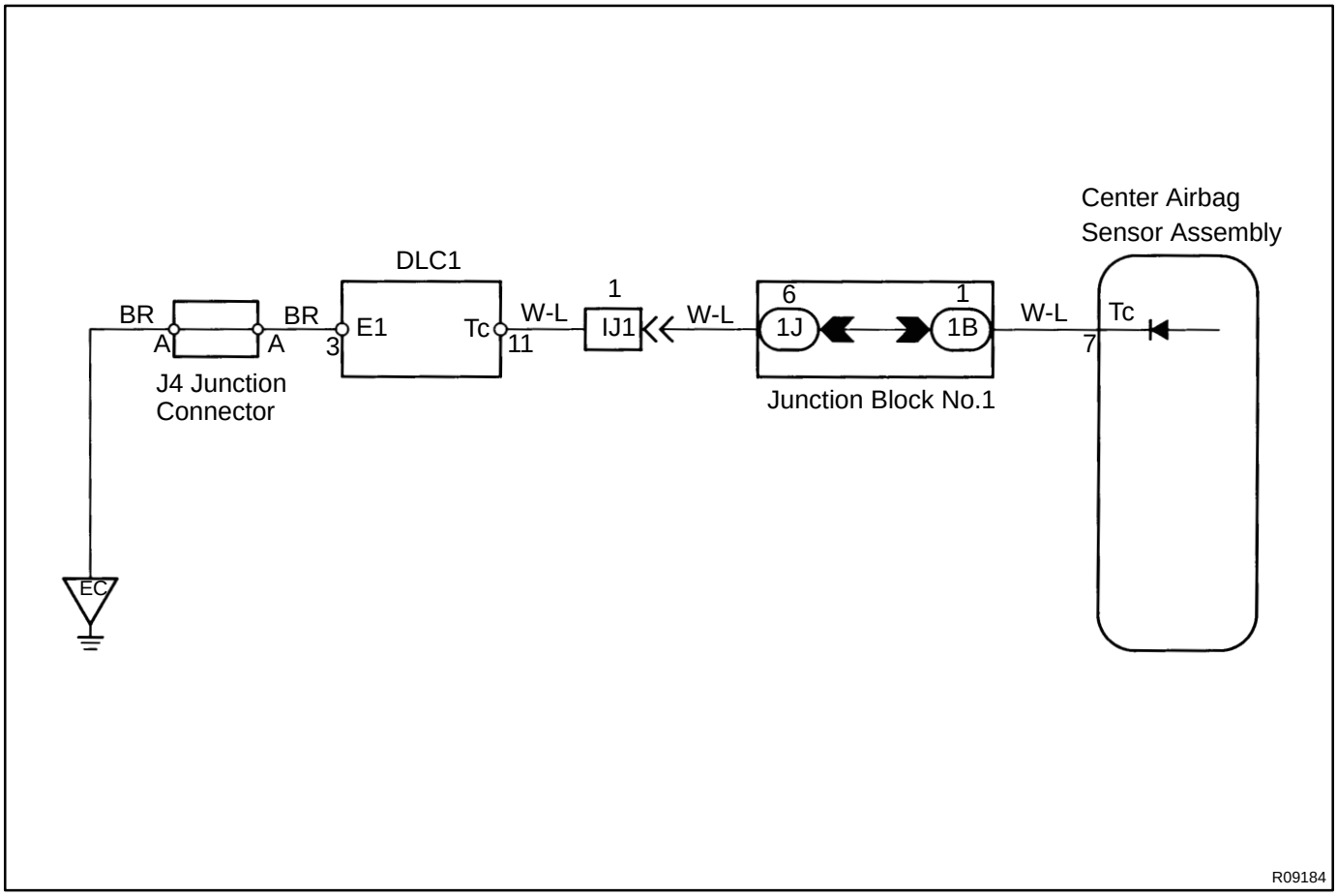

INSPECTION PROCEDURE

HINT:

If the DTC is not displayed, do the following troubleshooting.

1	**Does SRS warning light light up for approx. 6 seconds?**

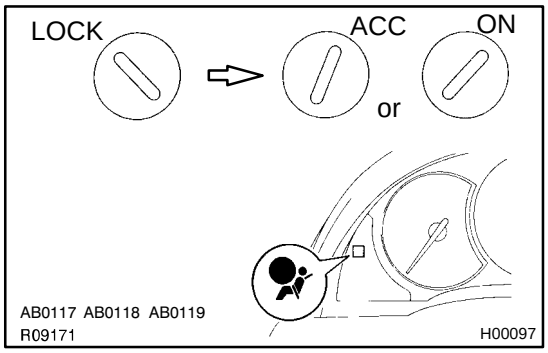

PREPARATION:

Check operation of SRS warning light after ignition switch is turned from LOCK position to ACC or ON position.

NO → **Check SRS warning light system (See page DI-346).**

YES

2	**Check voltage between terminals Tc and E1 of DLC1.**

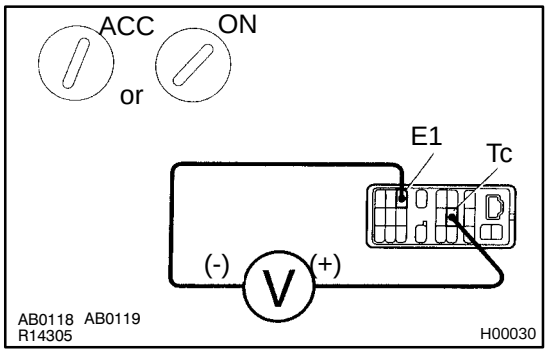

PREPARATION:

Turn the ignition switch to ACC or ON.

CHECK:

Measure the voltage between terminals Tc and E1 of DLC1.

OK:

Voltage: 10 - 14 V

OK → **Go to step 4.**

NG

3	Check voltage between terminals Tc of DLC1 and body ground.

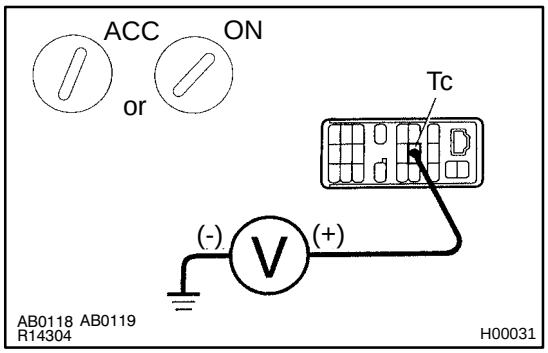

CHECK:

Measure the voltage between terminal Tc of DLC1 and body ground.

OK:

Voltage: 10 - 14 V

OK → **Check harness between terminal E1 of DLC1 and body ground.**

NG

4	Check center airbag sensor assembly.

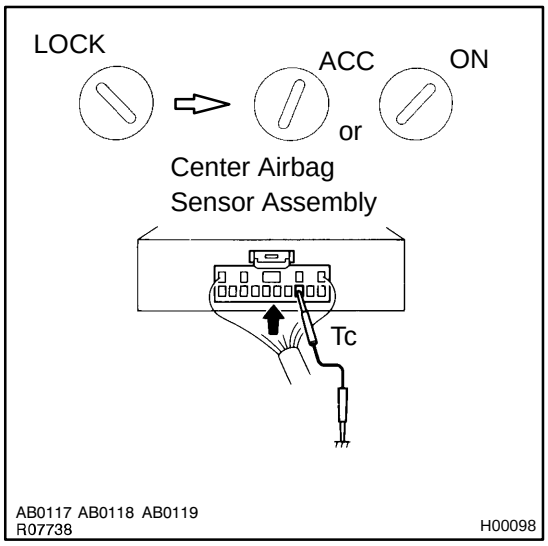

PREPARATION:

(a) Turn the ignition switch to LOCK.
(b) Disconnect negative (-) terminal cable from the battery, and wait at least 90 seconds.
(c) Remove the steering wheel pad (See page SR-12 or SR-21).
(d) Disconnect the connector of front passenger airbag assembly (See page RS-21).
(e) Disconnect the center airbag sensor assembly connector (See page RS-33).
(f) Insert the service wire into terminal Tc from back side as shown.
(g) Connect the center airbag sensor assembly connector with service wire.
(h) Connect negative (-) terminal cable to battery.
(i) Turn the ignition switch to ACC or ON and wait at least 20 seconds.
(j) Connect service wire of terminal Tc to body ground.

CHECK:

Check operation of SRS warning light.

OK:

SRS waning light comes on.

NOTICE:

Never make a mistake with the terminal connection position as this will cause a malfunction.

OK → **Check harness between center airbag sensor assembly and DLC1.**

NG

Replace center airbag sensor assembly.

If the DTC is displayed without a DTC check procedure, do the following troubleshooting.

1	**Check resistance between terminal Tc of center airbag sensor assembly and body ground.**

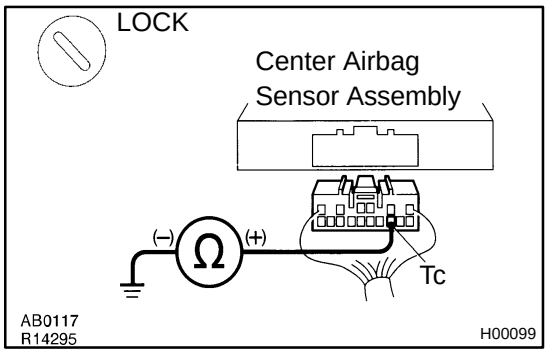

PREPARATION:

(a) Turn the ignition switch to LOCK.

(b) Disconnect negative (-) terminal cable from the battery, and wait at least 90 seconds.

(c) Disconnect the center airbag sensor assembly connector.

CHECK:

Check the resistance between terminal Tc of center airbag sensor assembly connector and body ground.

OK:

Resistance: 1 MΩ or Higher

OK → **Replace center airbag sensor assembly.**

NG

Repair or replace harness or connector.

DI552-01

Tc Circuit

CIRCUIT DESCRIPTION

This circuit sends a signal to the ECU that DTC output is required.

WIRING DIAGRAM

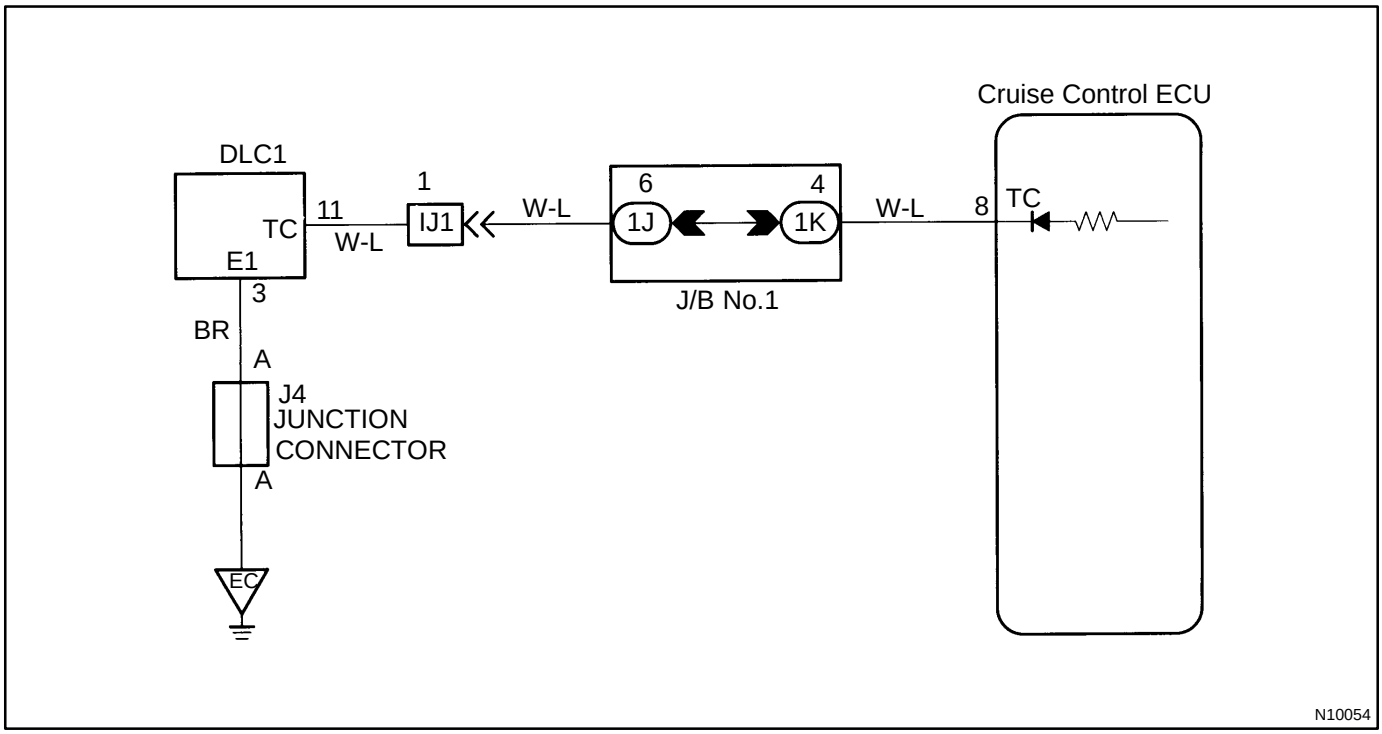

INSPECTION PROCEDURE

1	**Check voltage between terminals Tc and E1 of DLC1.**

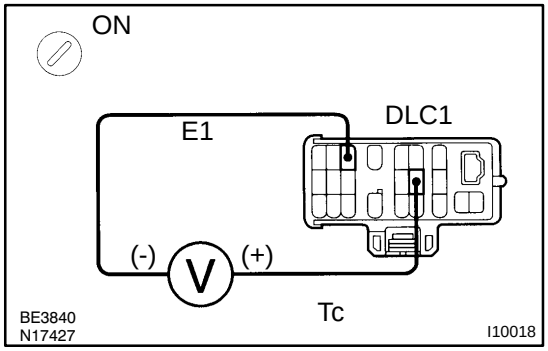

CHECK:

(a) Turn ignition switch ON.

(b) Measure voltage between terminals Tc and E1 of DLC1.

OK:

Voltage: 10 - 16 V

NG → **Proceed to next circuit inspection shown on matrix chart (See page DI-421).**

OK

2	**Check for open and short in harness and connector between ECU and DLC1, DLC1 and body ground (See page IN-28).**

NG → **Repair or replace harness or connector.**

OK

Check and replace ECU.

DI53V-02

Tc Terminal Circuit

CIRCUIT DESCRIPTION

Connecting terminals Tc and E_1 of the DLC1 causes the ECU to display the DTC by flashing the ABS warning light.

WIRING DIAGRAM

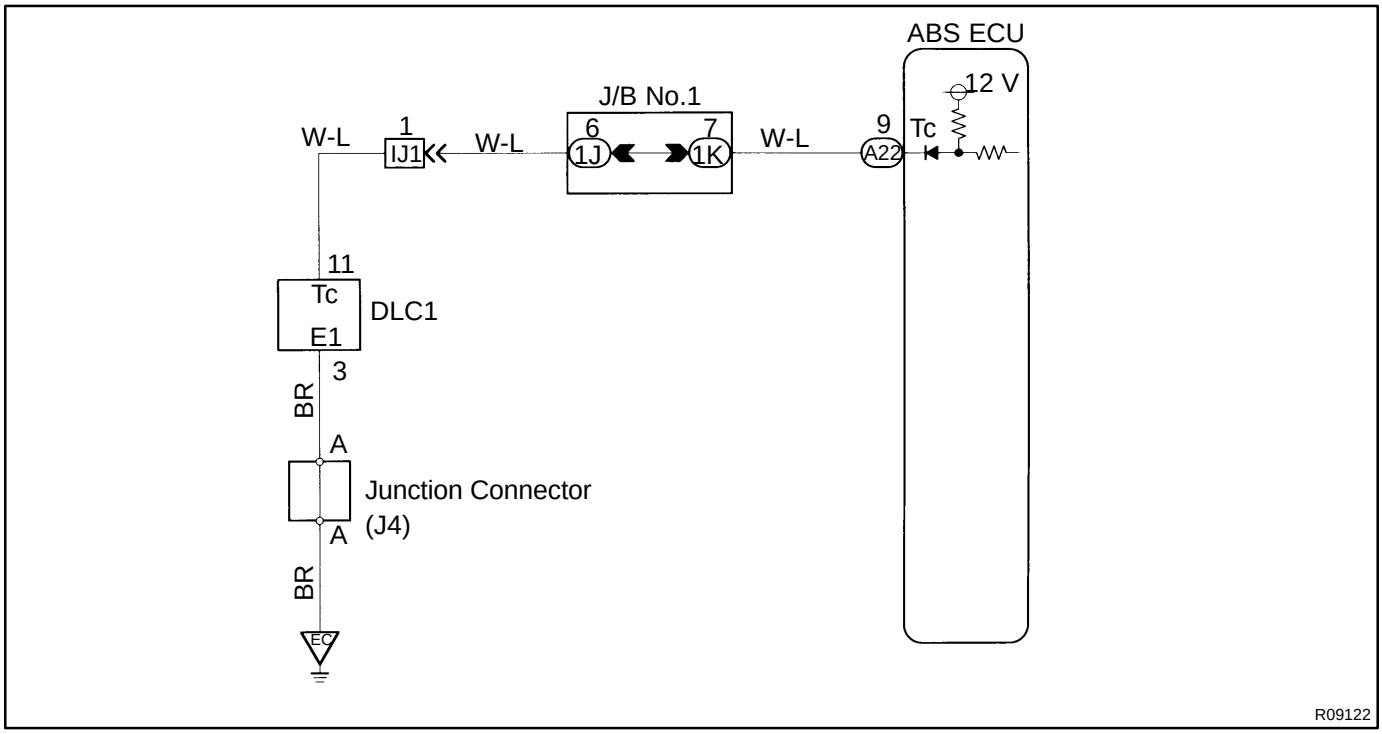

INSPECTION PROCEDURE

1	**Check voltage between terminals Tc and E_1 of DLC1.**

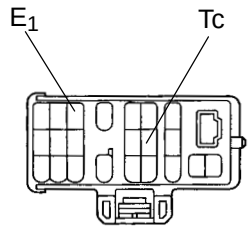

DLC1

F00007

CHECK:

(a) Turn the ignition switch ON.

(b) Measure voltage between terminals Tc and E_1 of DLC1.

OK:

Voltage: 10 - 14 V

OK → **If ABS warning light does not blink even after Tc and E_1 are connected, the ECU may be defective.**

NG

2	**Check for open and short in harness and connector between ABS ECU and DLC1, DLC1 and body ground (See page IN-28).**

NG → **Repair or replace harness or connector.**

OK

Check and replace ABS ECU.

DI53W-02

Ts Terminal Circuit

CIRCUIT DESCRIPTION

The sensor check circuit detects abnormalities in the speed sensor signal which cannot be detected with the DTC check.

Connecting terminals Ts and E_1 of the DLC1 in the engine compartment starts the check.

WIRING DIAGRAM

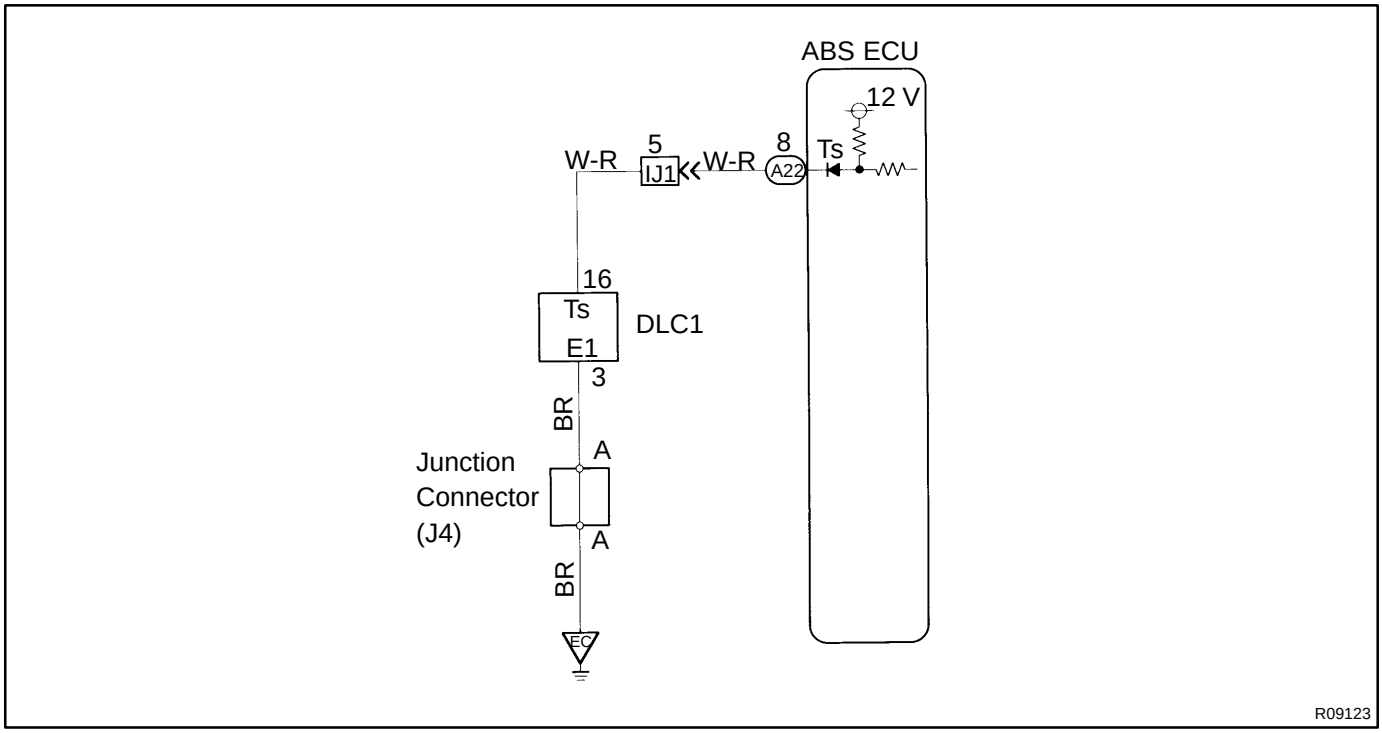

R09123

INSPECTION PROCEDURE

1	**Check voltage between terminal Ts and E_1 of DLC1.**

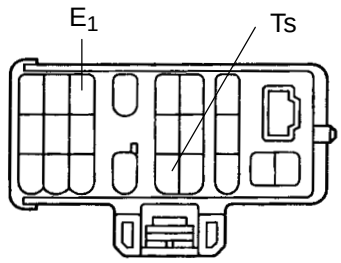

CHECK:

(a) Turn ignition switch ON.

(b) Measure voltage between terminals Ts and E_1 of DLC1.

OK:

Voltage: 10 - 14 V

OK → **If ABS warning light does not blink even after Ts and E_1 are connected, the ECU may be defective.**

NG

2	**Check for open and short in harness and connector between ABS ECU and DLC1, DLC1 and body ground (See page IN-28).**

NG → **Repair or replace harness or connector.**

OK

Check and replace ABS ECU.

QUARTER WINDOW GLASS (Coupe)

BO1EC-03

COMPONENTS

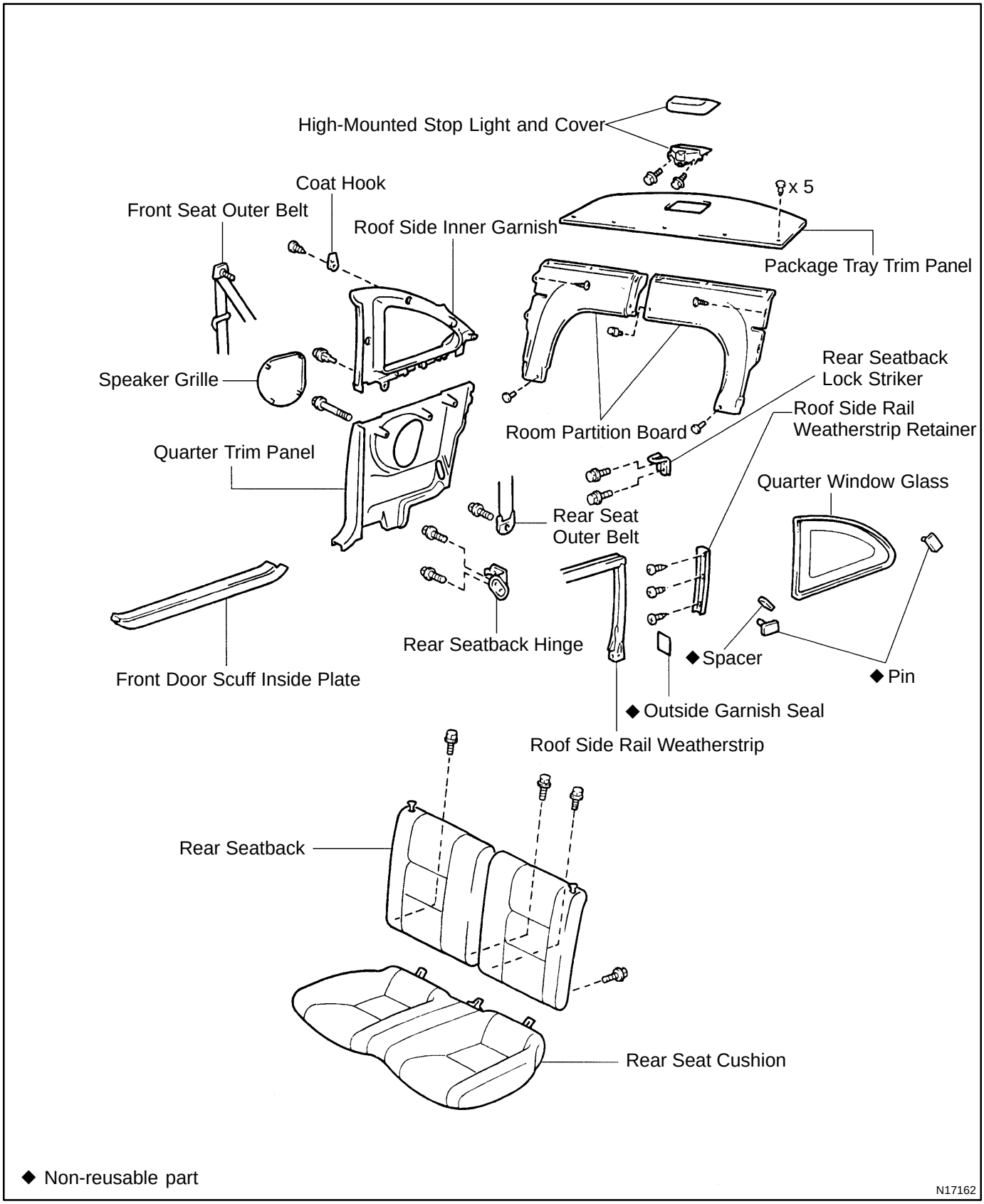

◆ Non-reusable part

N17162

NON-TILT STEERING COLUMN

COMPONENTS

SR0JP-04

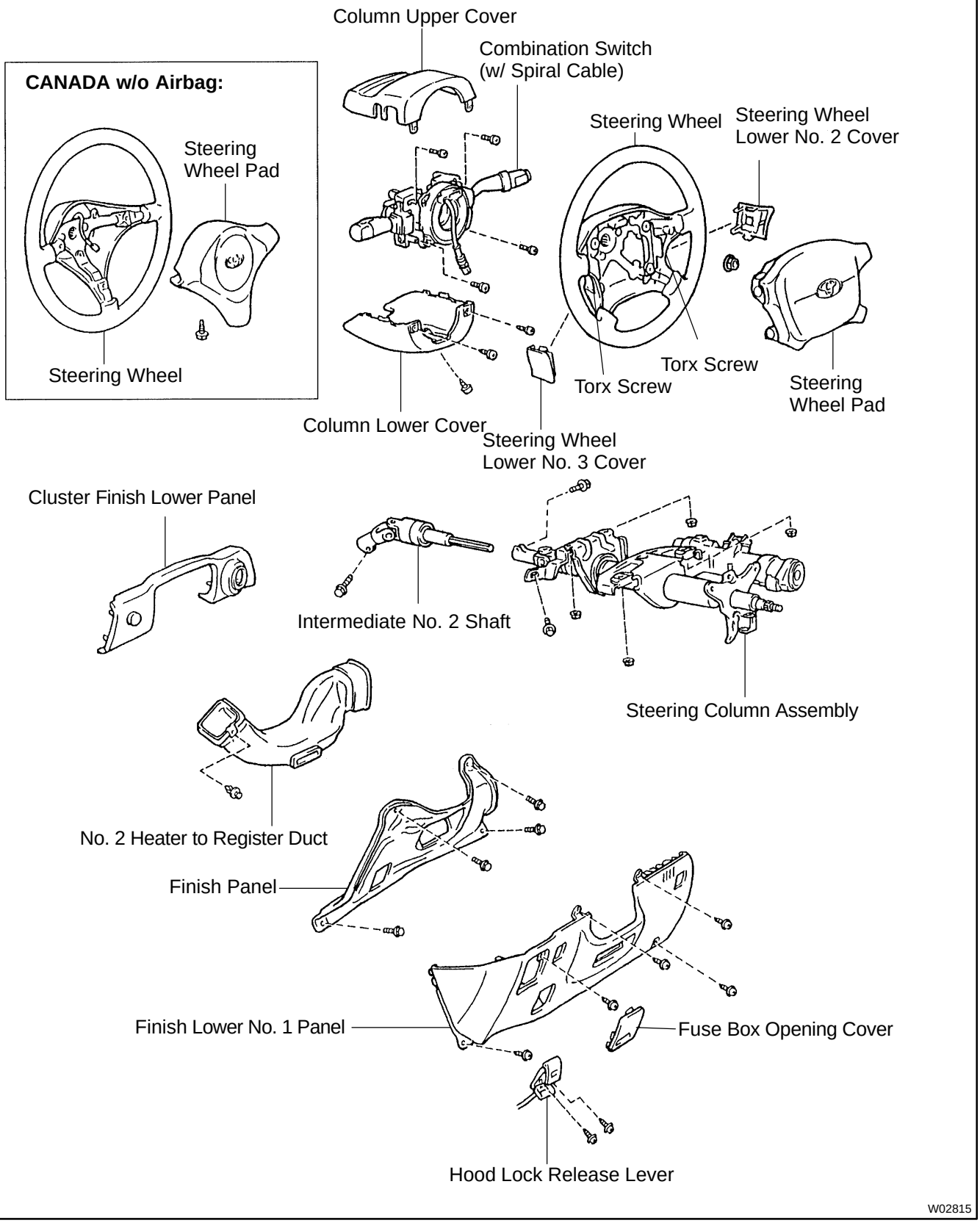

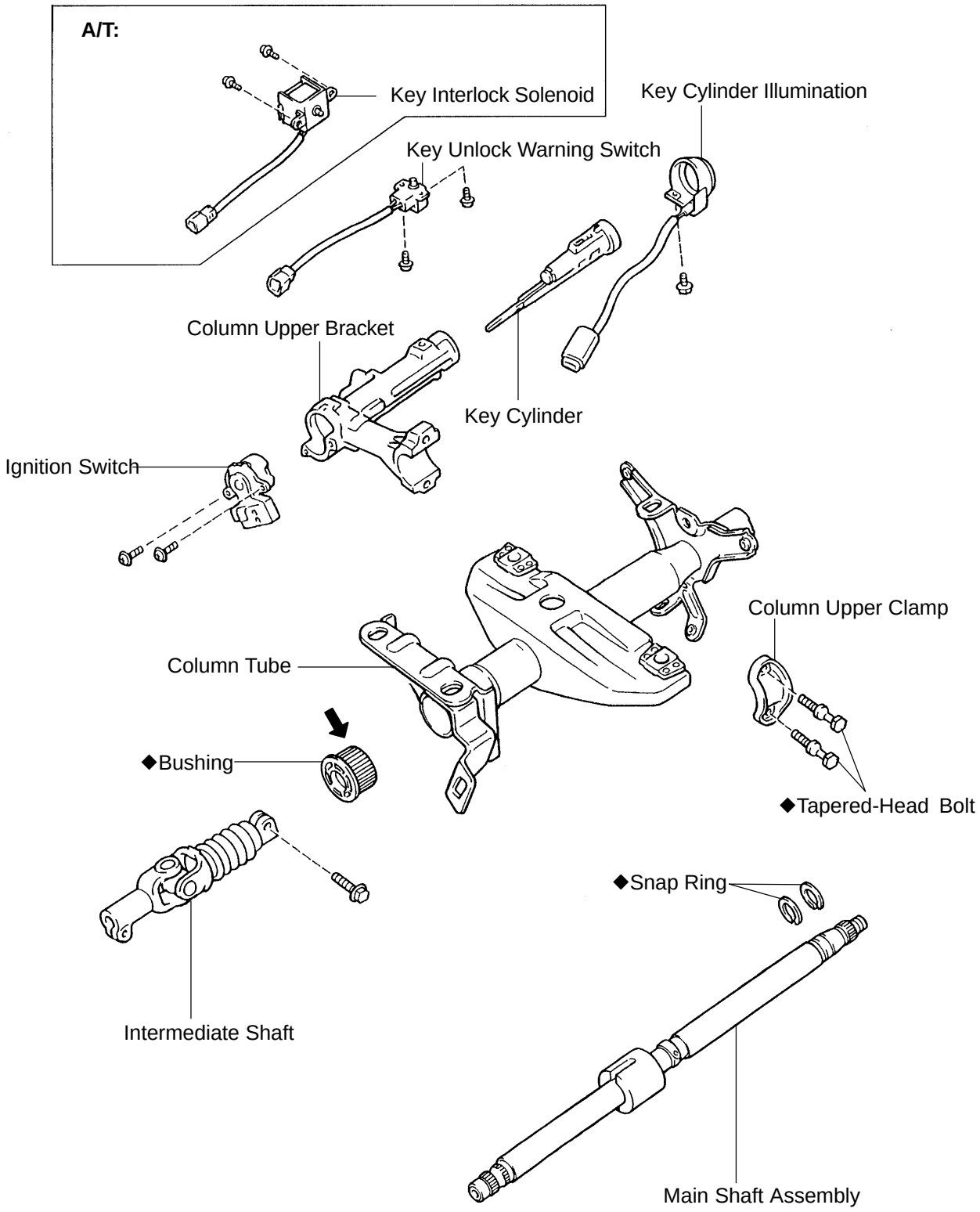
A/T:
Key Interlock Solenoid
Key Cylinder Illumination
Key Unlock Warning Switch
Column Upper Bracket
Key Cylinder
Ignition Switch
Column Upper Clamp
Column Tube
◆Bushing
◆Tapered-Head Bolt
◆Snap Ring
Intermediate Shaft
Main Shaft Assembly
◆Non-reusable part
Molybdenum disulfide lithium base grease
W02816

POWER STEERING VANE PUMP (5S-FE)

SR0JV-04

COMPONENTS

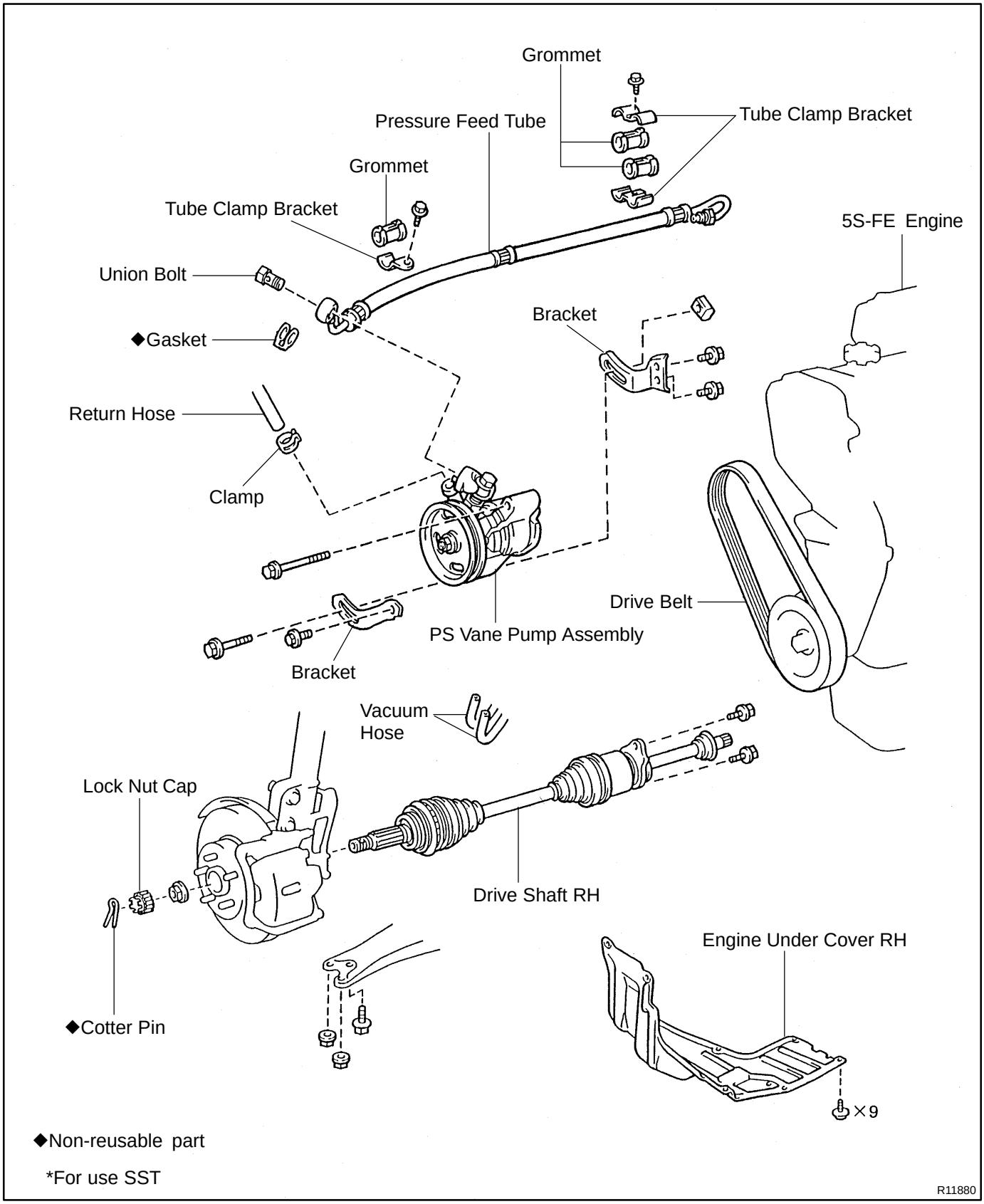

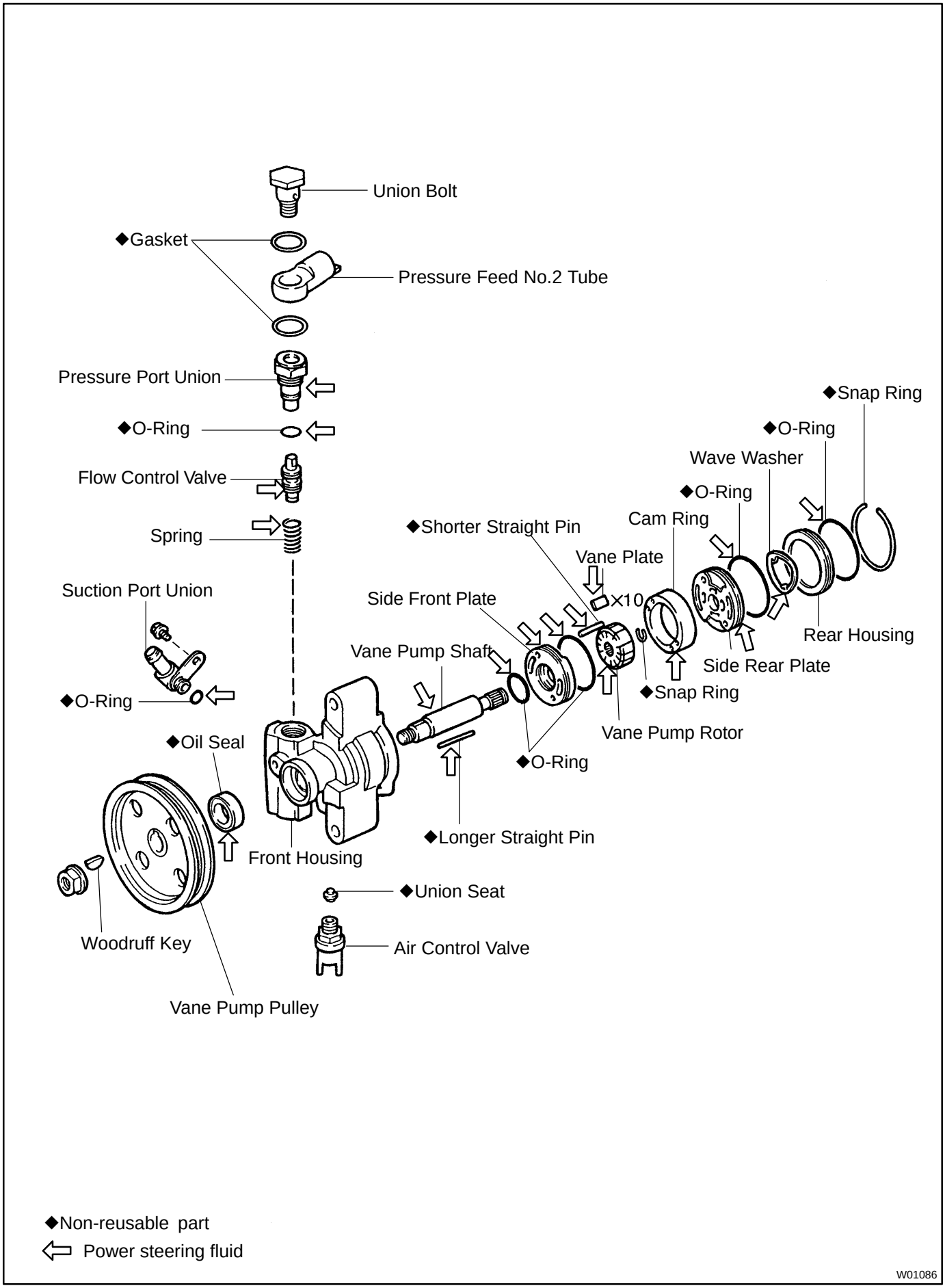
Union Bolt
◆Gasket
Pressure Feed No.2 Tube
Pressure Port Union
◆O-Ring
Flow Control Valve
Spring
Suction Port Union
◆O-Ring
◆Oil Seal
Front Housing
Woodruff Key
Vane Pump Pulley
◆Union Seat
Air Control Valve
◆Longer Straight Pin
Vane Pump Shaft
◆Shorter Straight Pin
Side Front Plate
Vane Plate
×10
◆O-Ring
Vane Pump Rotor
◆Snap Ring
Side Rear Plate
Cam Ring
◆O-Ring
Wave Washer
◆O-Ring
◆Snap Ring
Rear Housing
◆Non-reusable part
Power steering fluid
W01086

HEATED OXYGEN SENSOR (Bank 1 Sensor 2)

SF0W1-02

COMPONENTS

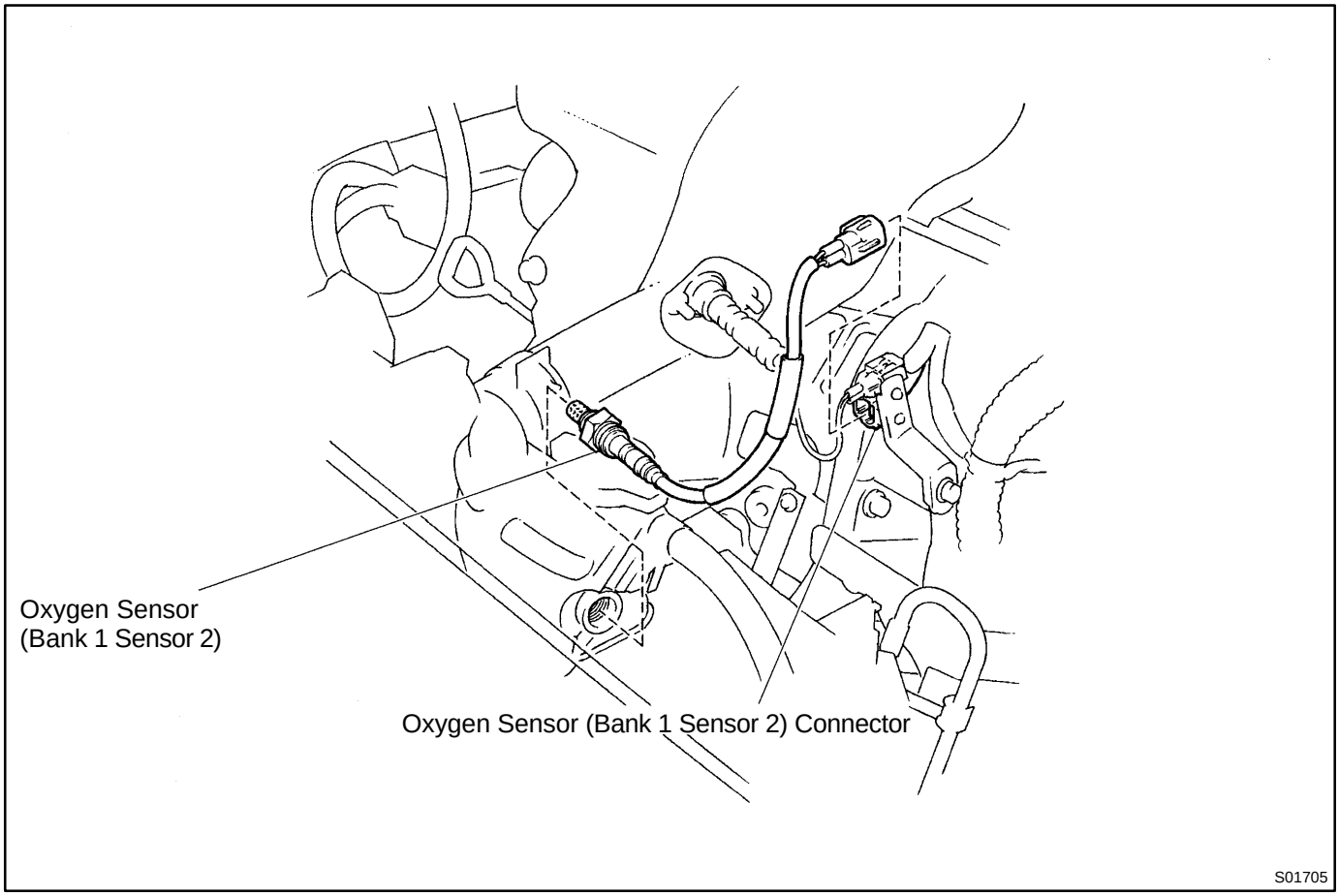

GENERATOR

COMPONENTS

CH0E4-01

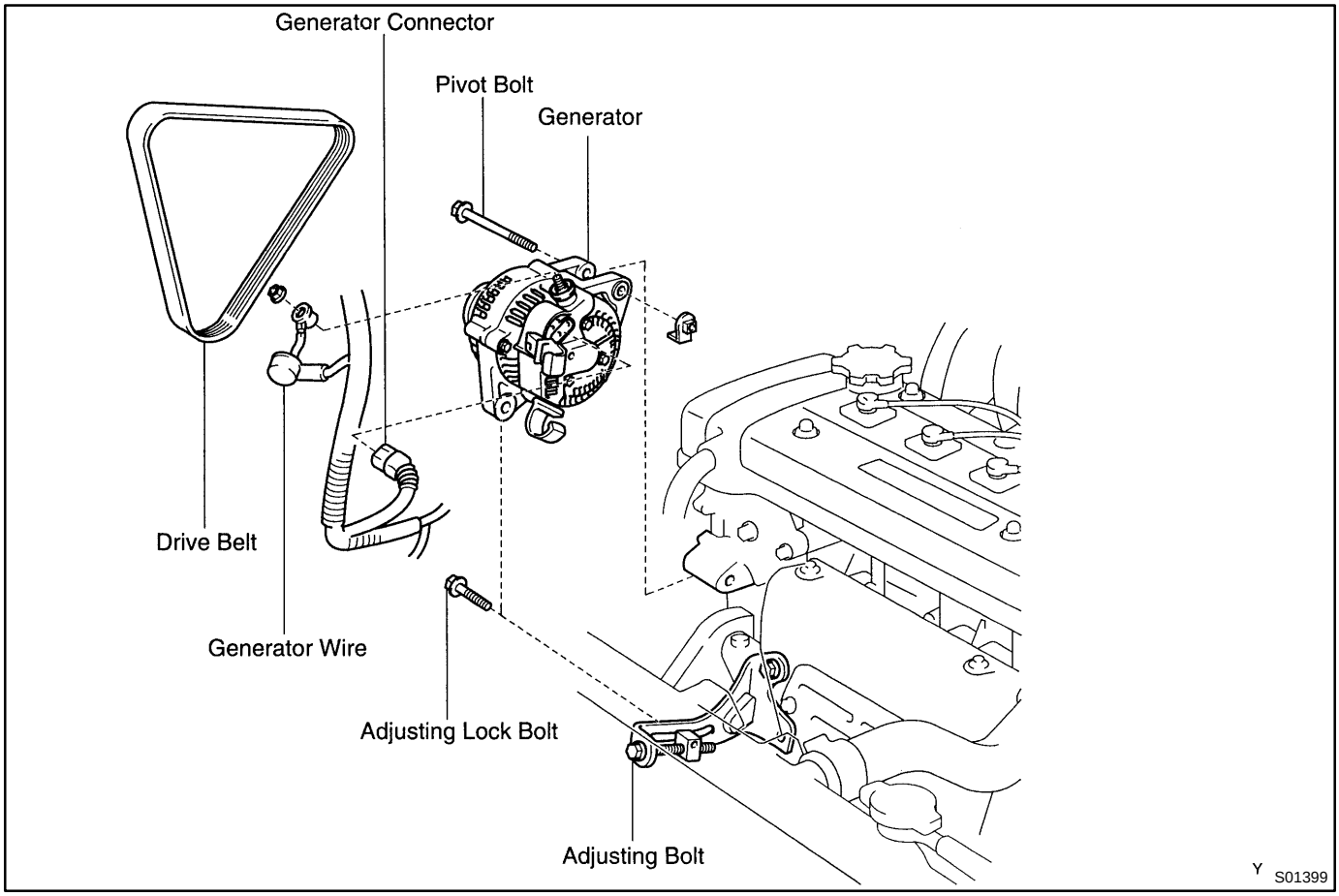

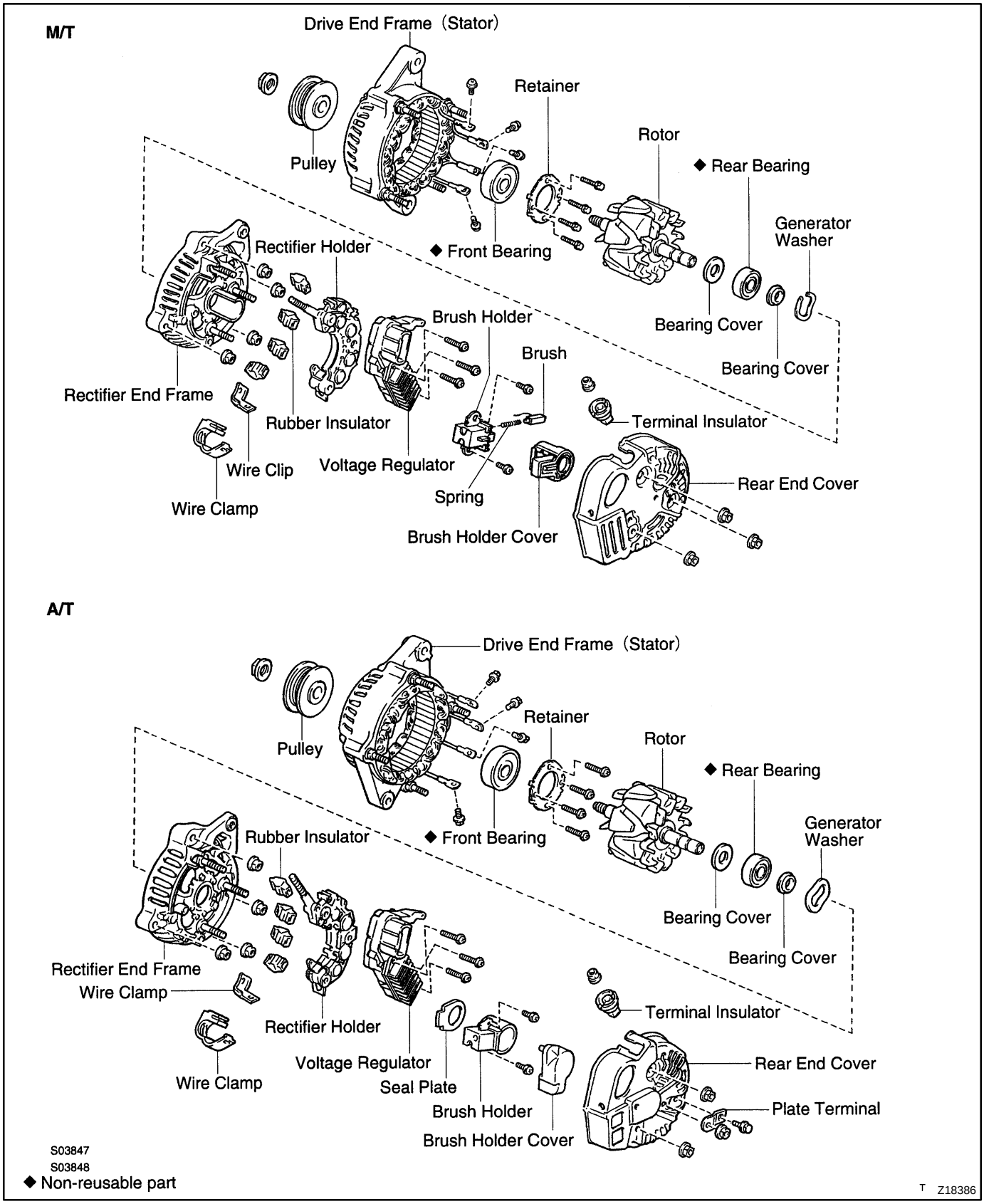
M/T
Drive End Frame (Stator)
Pulley
Retainer
Rotor
◆ Rear Bearing
Generator Washer
◆ Front Bearing
Rectifier Holder
Brush Holder
Brush
Bearing Cover
Bearing Cover
Rectifier End Frame
Rubber Insulator
Terminal Insulator
Wire Clip
Voltage Regulator
Rear End Cover
Spring
Wire Clamp
Brush Holder Cover
A/T
Drive End Frame (Stator)
Pulley
Retainer
Rotor
◆ Rear Bearing
Rubber Insulator
◆ Front Bearing
Generator Washer
Bearing Cover
Bearing Cover
Rectifier End Frame
Wire Clamp
Terminal Insulator
Rectifier Holder
Rear End Cover
Voltage Regulator
Seal Plate
Plate Terminal
Brush Holder
Wire Clamp
Brush Holder Cover
S03847
S03848
◆ Non-reusable part
T Z18386

INPUT SHAFT

COMPONENTS

MX04J-02

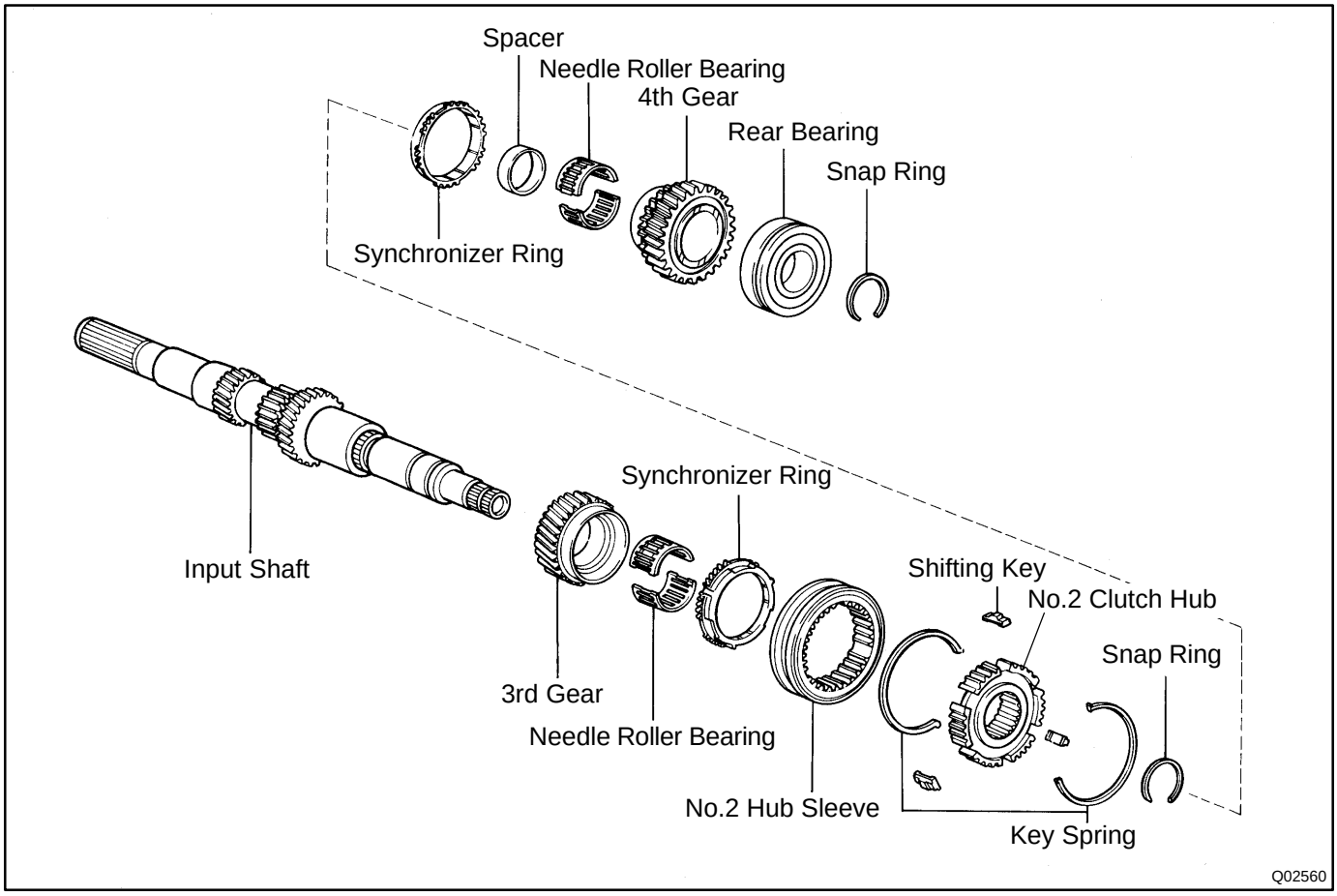

MANUAL TRANSAXLE ASSEMBLY

COMPONENTS

MX04F-09

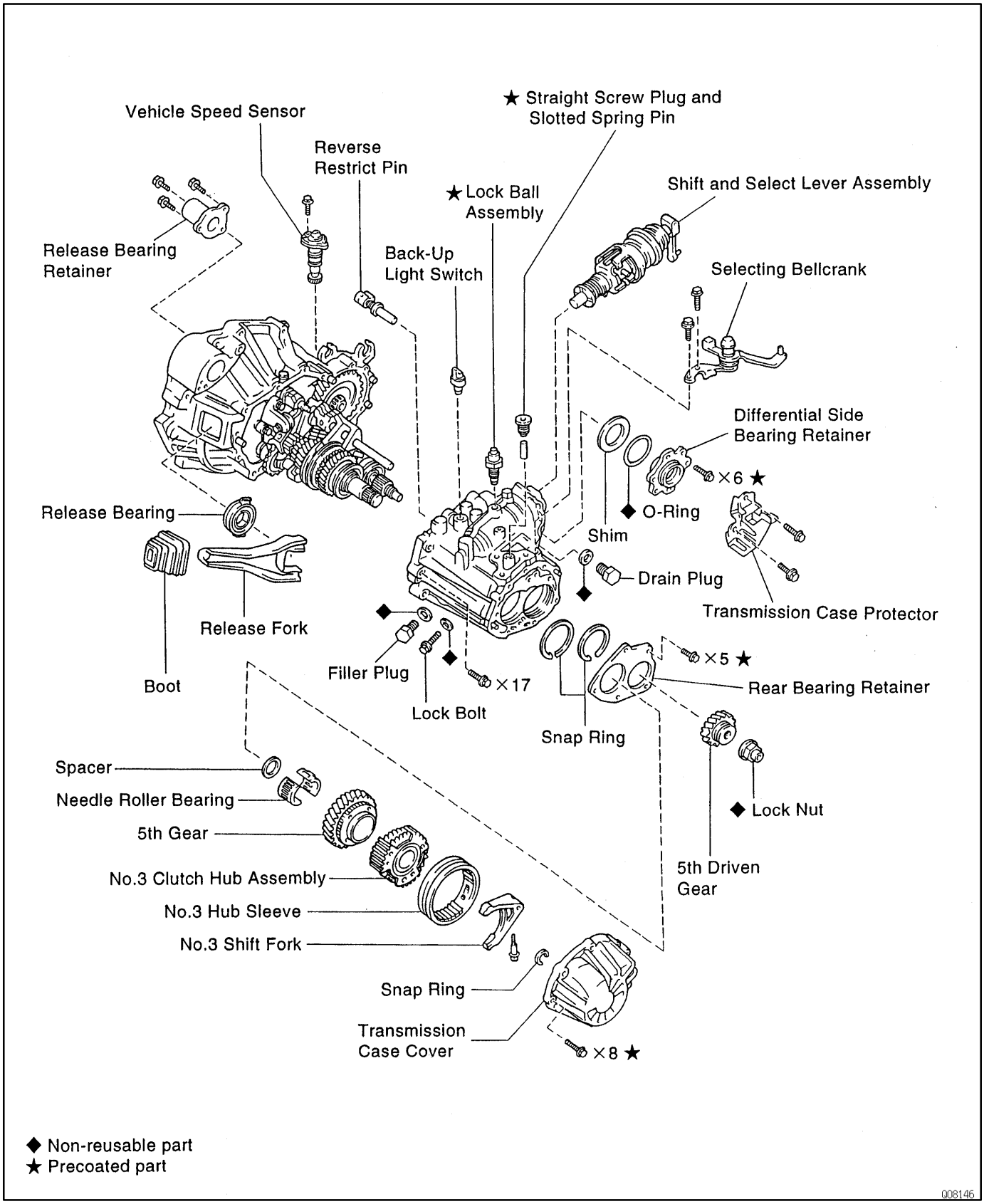

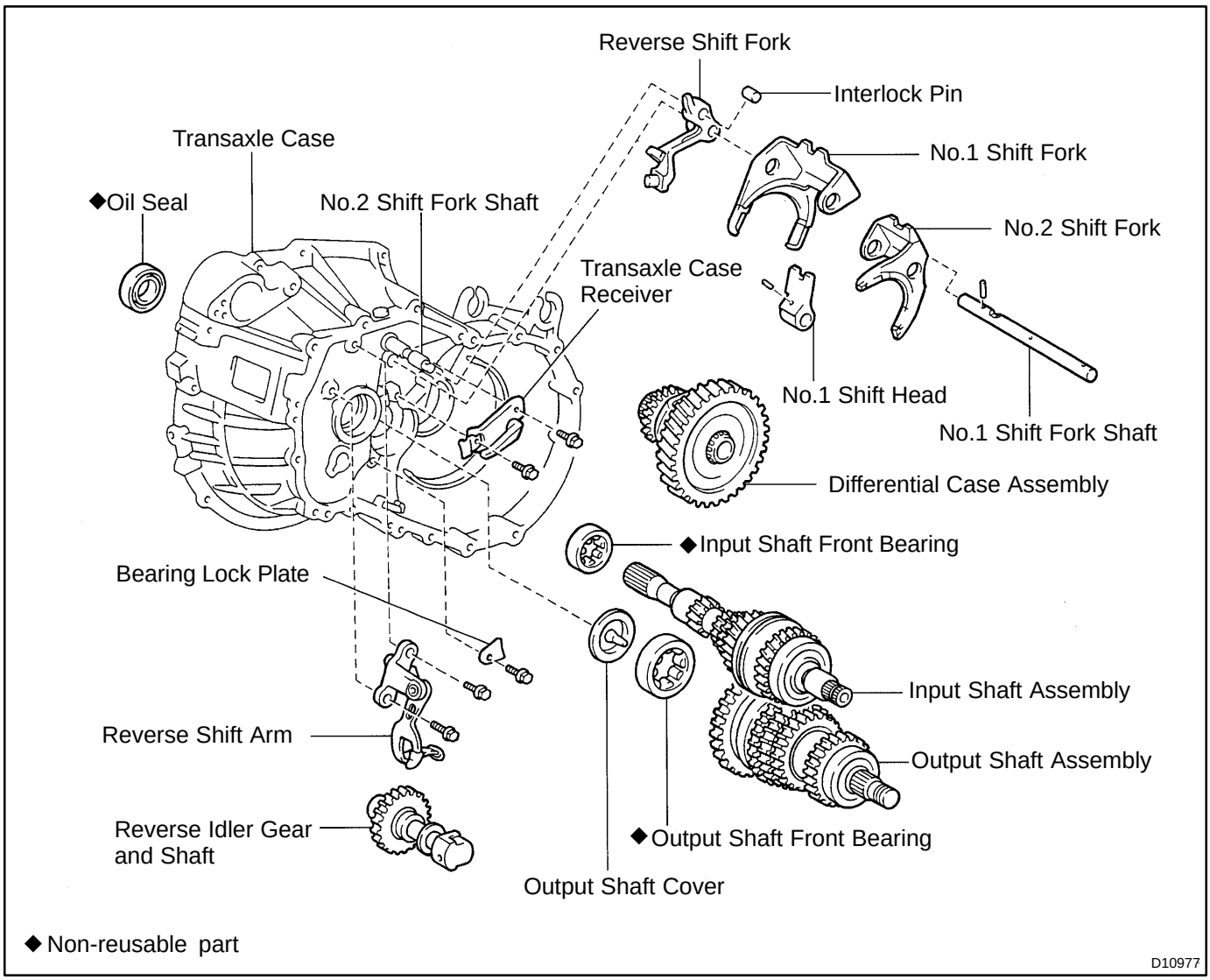
Reverse Shift Fork
Interlock Pin
Transaxle Case
No.1 Shift Fork
◆Oil Seal
No.2 Shift Fork Shaft
No.2 Shift Fork
Transaxle Case Receiver
No.1 Shift Head
No.1 Shift Fork Shaft
Differential Case Assembly
◆Input Shaft Front Bearing
Bearing Lock Plate
Input Shaft Assembly
Reverse Shift Arm
Output Shaft Assembly
Reverse Idler Gear and Shaft
◆Output Shaft Front Bearing
Output Shaft Cover
◆Non-reusable part
D10977

CIRCUIT OPENING RELAY

COMPONENTS

SF0VN-02

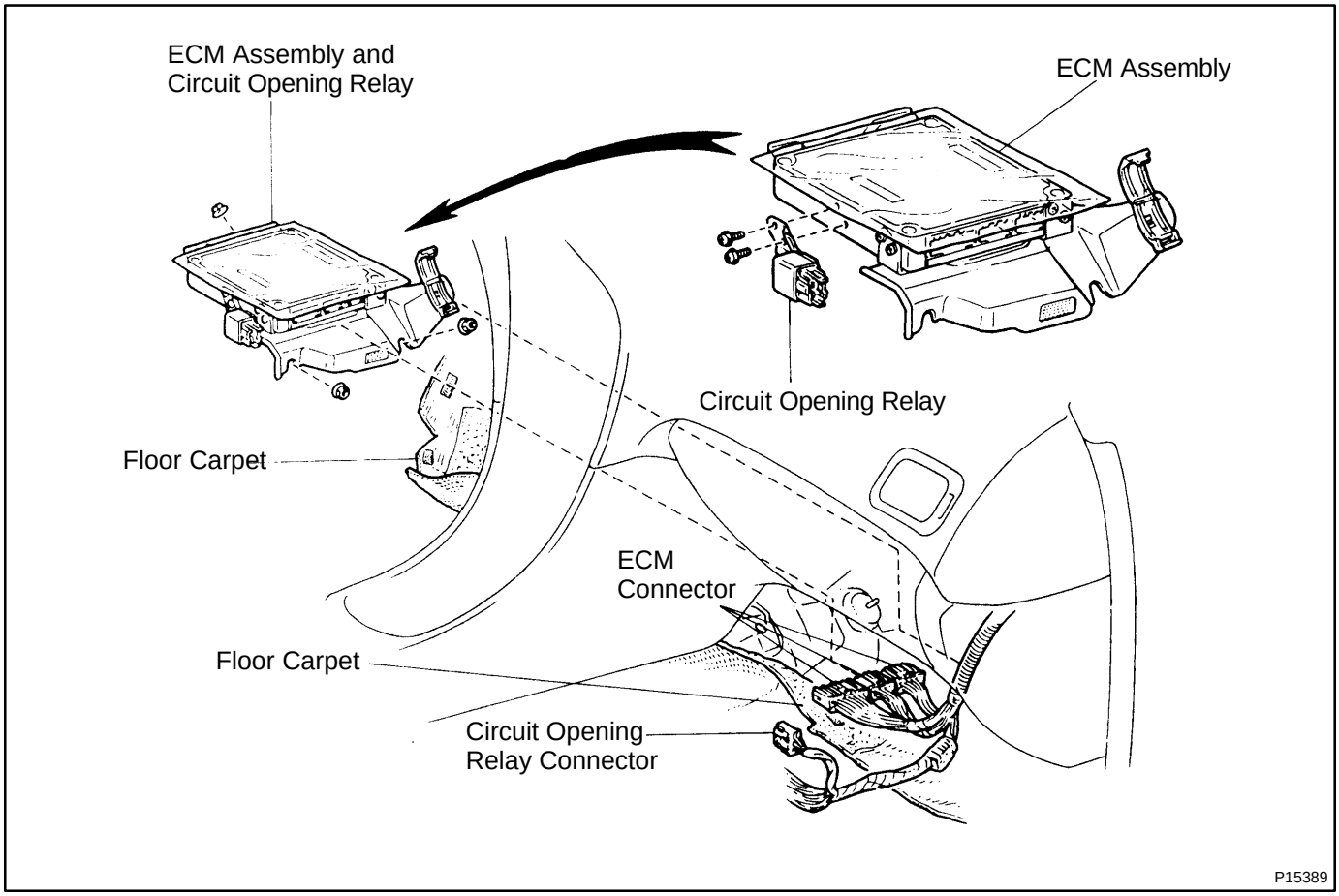

CRANKSHAFT POSITION SENSOR

IG0LG-01

COMPONENTS

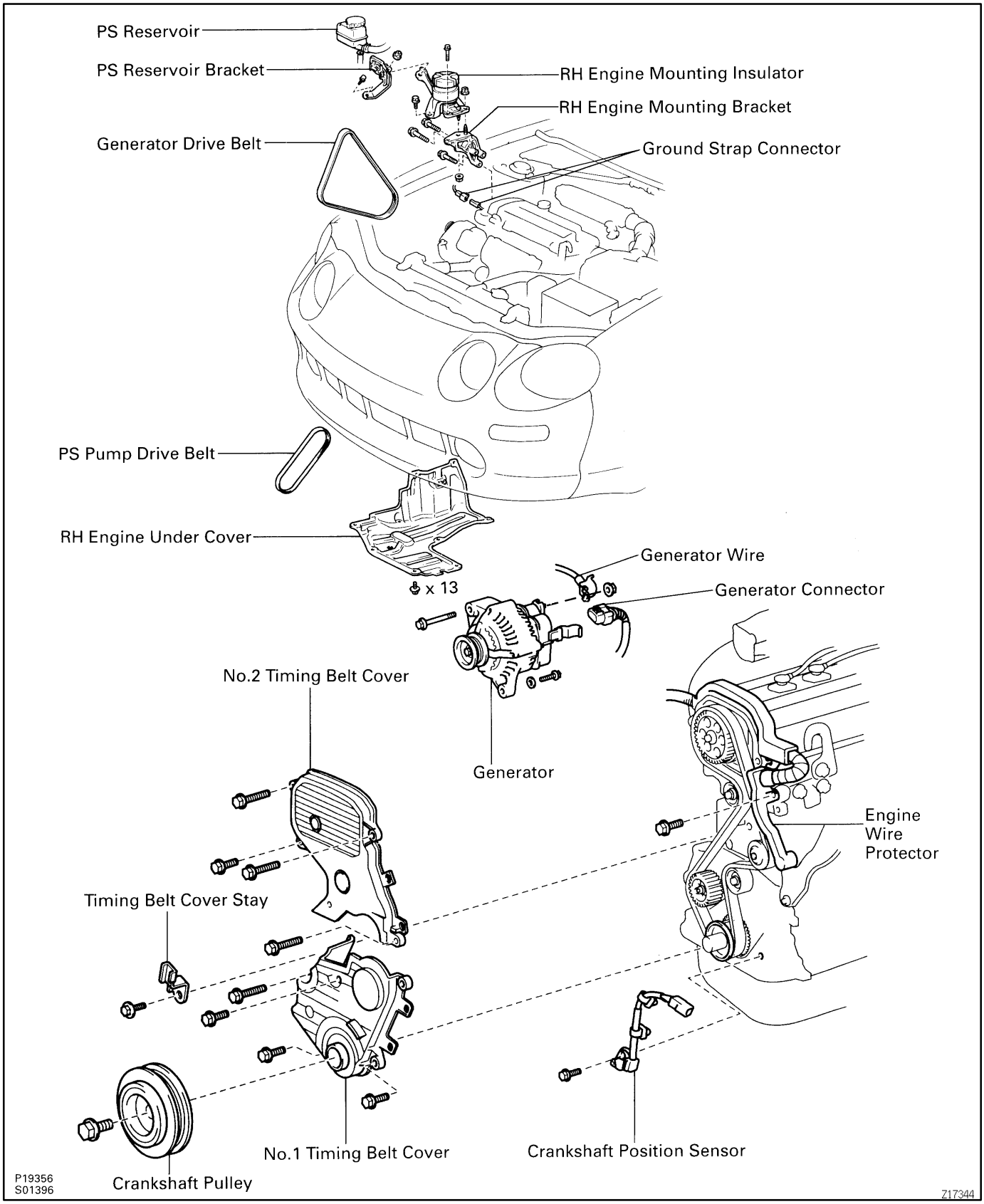

CYLINDER BLOCK

COMPONENTS

EM0JH-02

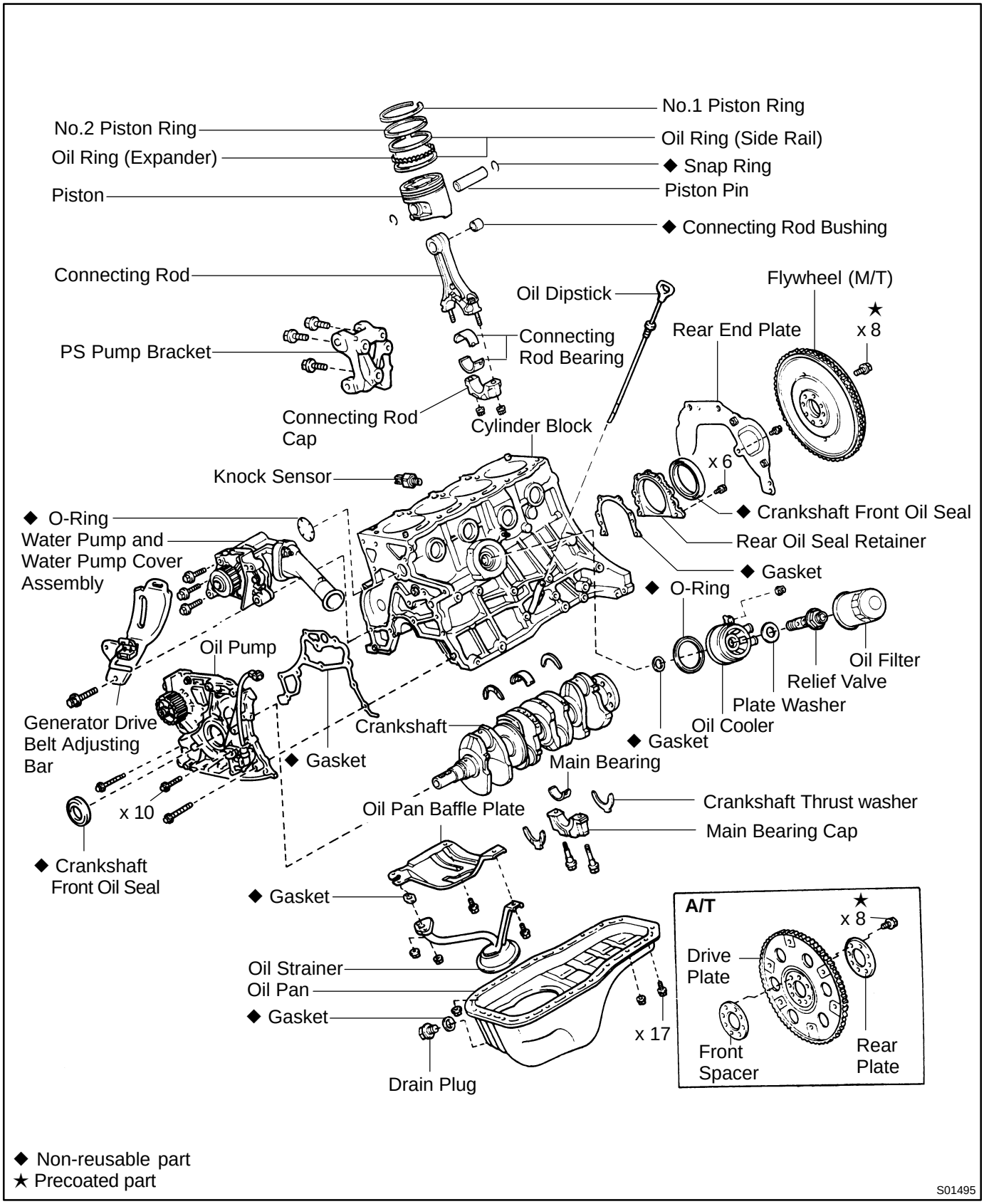

CYLINDER HEAD

EM0J7-03

COMPONENTS

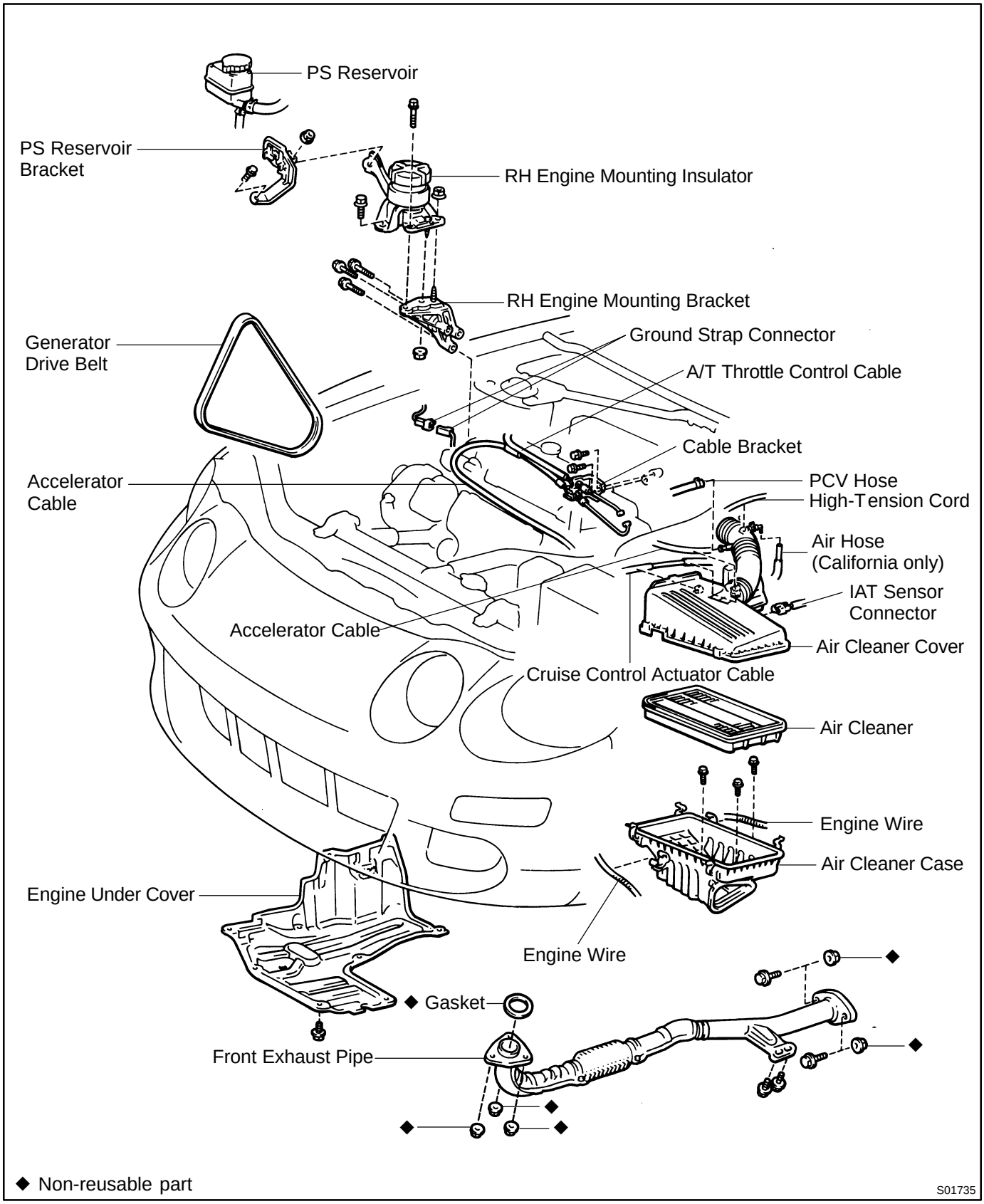

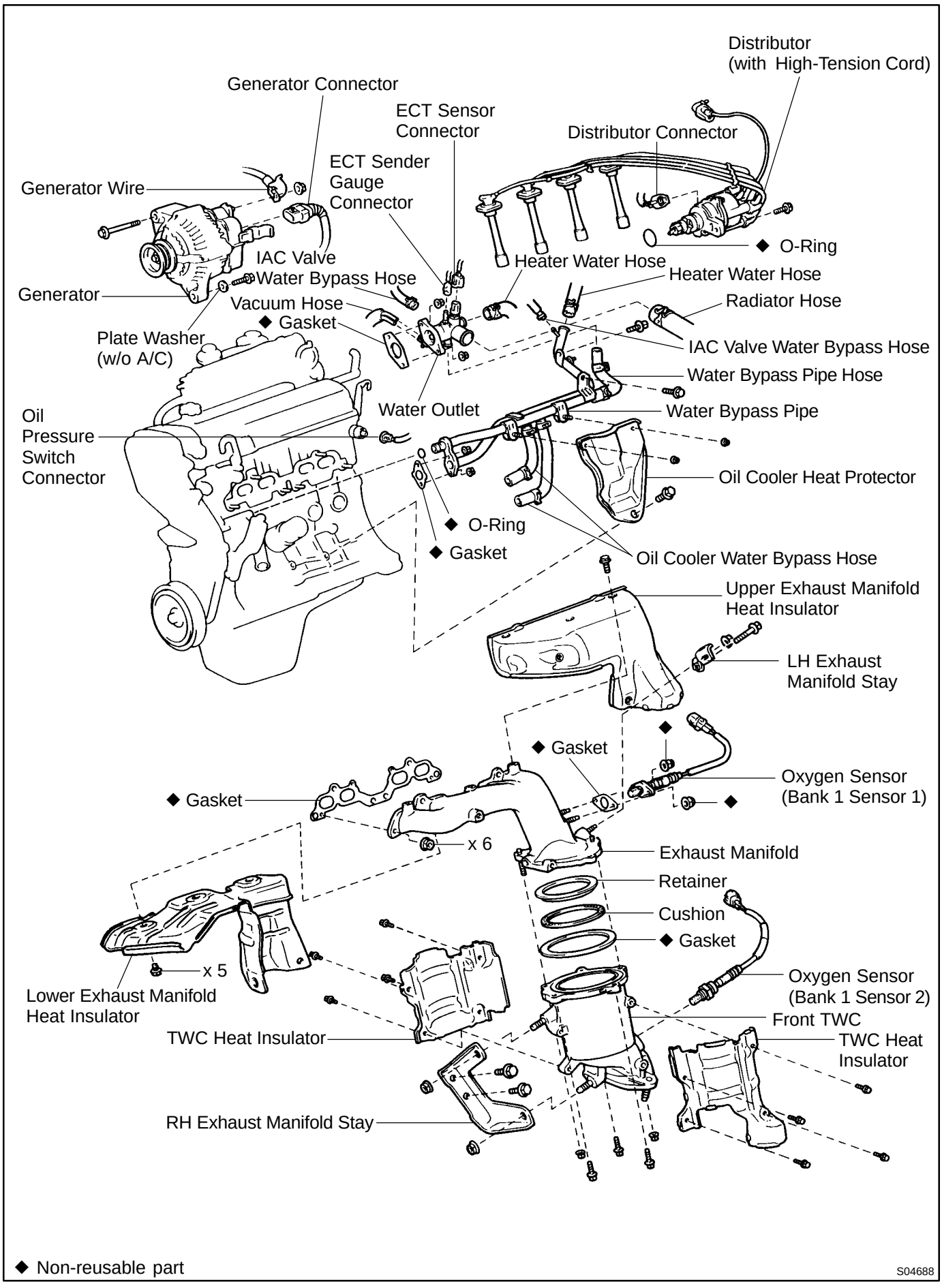

◆ Non-reusable part

S04688

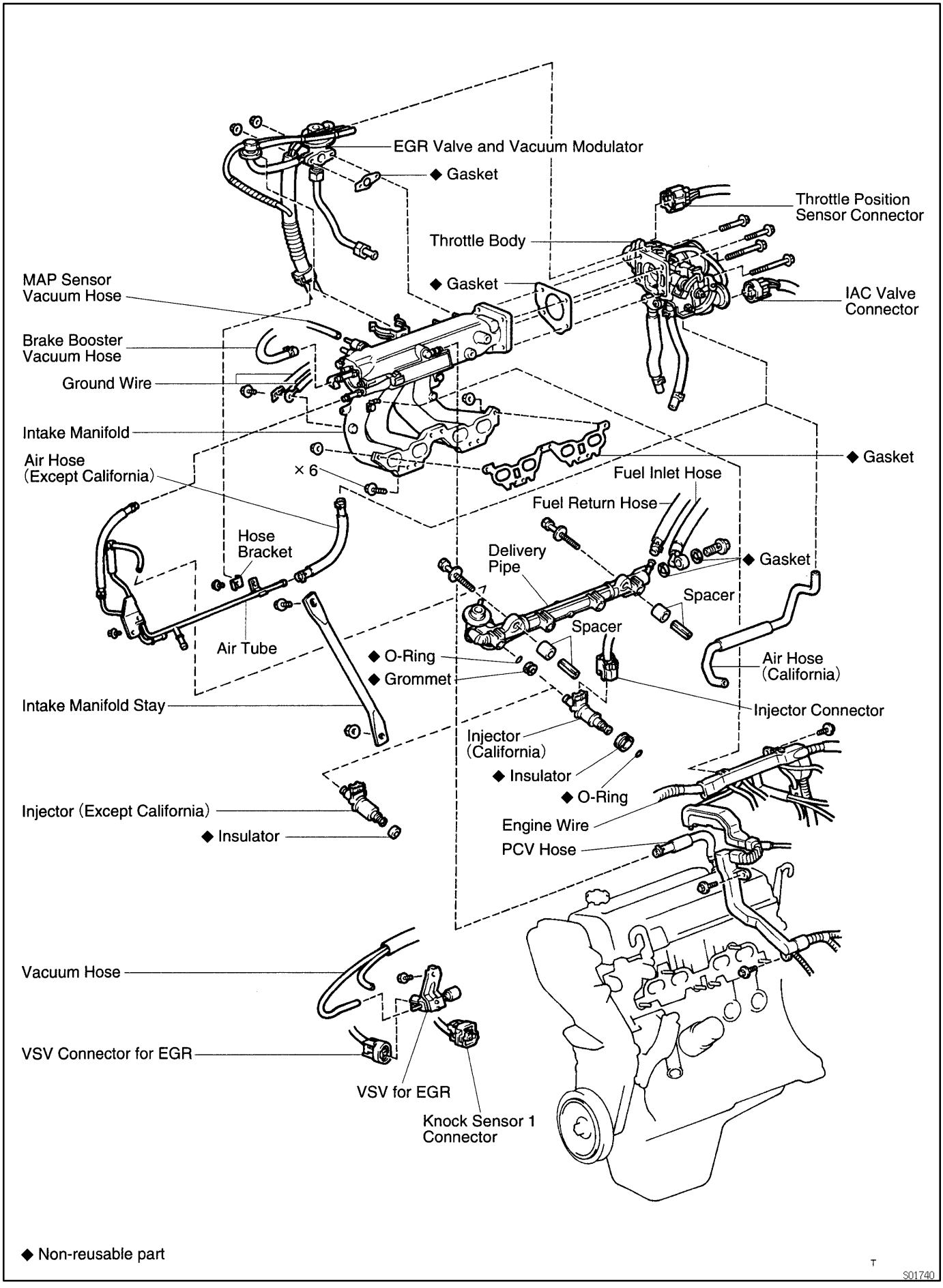
EGR Valve and Vacuum Modulator
◆ Gasket
Throttle Position Sensor Connector
Throttle Body
◆ Gasket
IAC Valve Connector
MAP Sensor Vacuum Hose
Brake Booster Vacuum Hose
Ground Wire
Intake Manifold
◆ Gasket
Air Hose (Except California)
× 6
Fuel Inlet Hose
Fuel Return Hose
Hose Bracket
Delivery Pipe
◆ Gasket
Spacer
Spacer
Air Tube
◆ O-Ring
◆ Grommet
Air Hose (California)
Injector Connector
Intake Manifold Stay
Injector (California)
◆ Insulator
◆ O-Ring
Injector (Except California)
◆ Insulator
Engine Wire
PCV Hose
Vacuum Hose
VSV Connector for EGR
VSV for EGR
Knock Sensor 1 Connector
◆ Non-reusable part
S01740

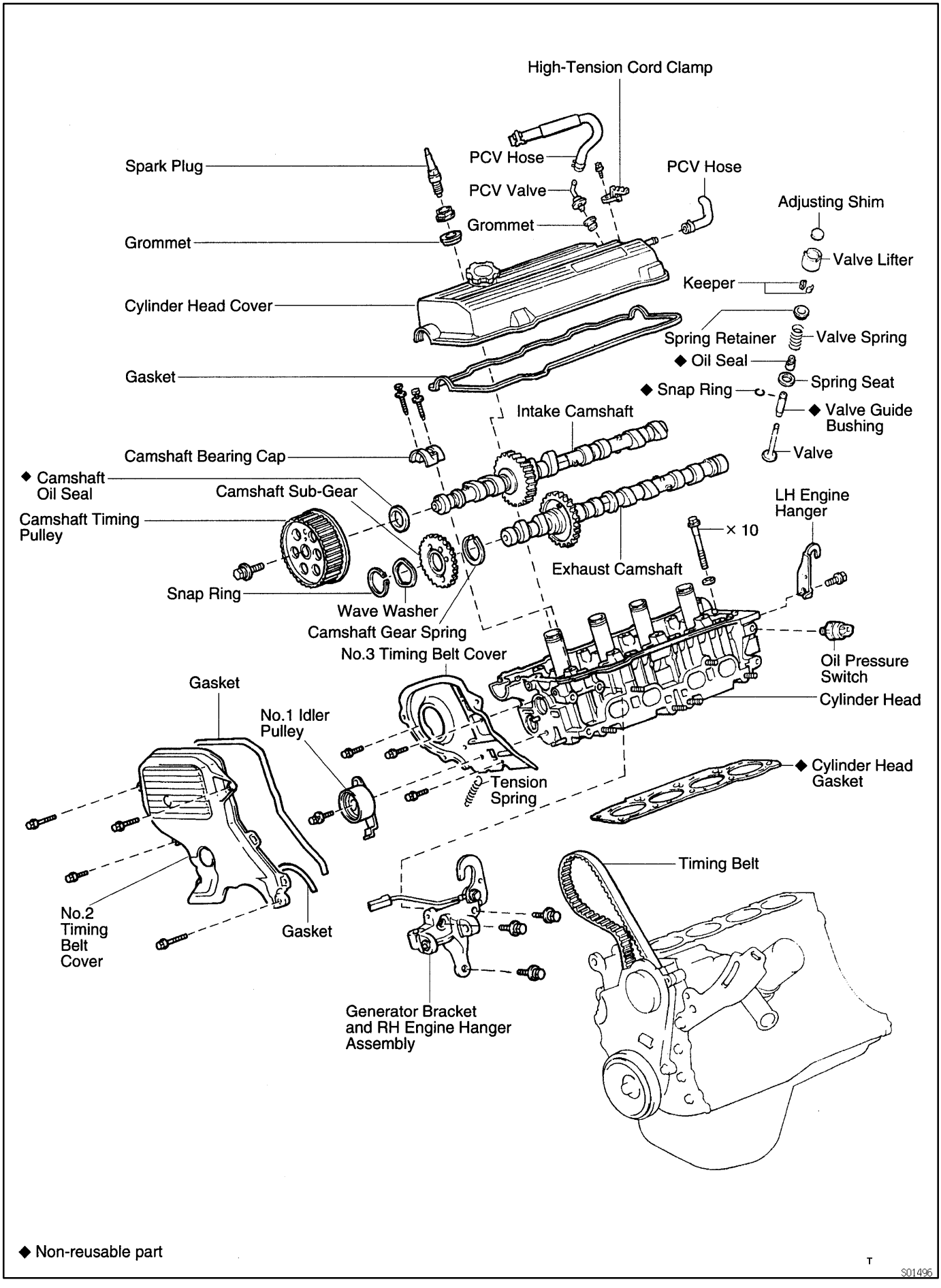
High-Tension Cord Clamp
Spark Plug
PCV Hose
PCV Valve
PCV Hose
Grommet
Grommet
Adjusting Shim
Valve Lifter
Keeper
Cylinder Head Cover
Spring Retainer
Valve Spring
◆ Oil Seal
Gasket
◆ Snap Ring
Spring Seat
◆ Valve Guide Bushing
Intake Camshaft
Valve
Camshaft Bearing Cap
◆ Camshaft Oil Seal
Camshaft Sub-Gear
LH Engine Hanger
Camshaft Timing Pulley
× 10
Exhaust Camshaft
Snap Ring
Wave Washer
Camshaft Gear Spring
No.3 Timing Belt Cover
Oil Pressure Switch
Gasket
Cylinder Head
No.1 Idler Pulley
◆ Cylinder Head Gasket
Tension Spring
Timing Belt
No.2 Timing Belt Cover
Gasket
Generator Bracket and RH Engine Hanger Assembly
◆ Non-reusable part
T
S01496

DISTRIBUTOR

COMPONENTS

IG084-02

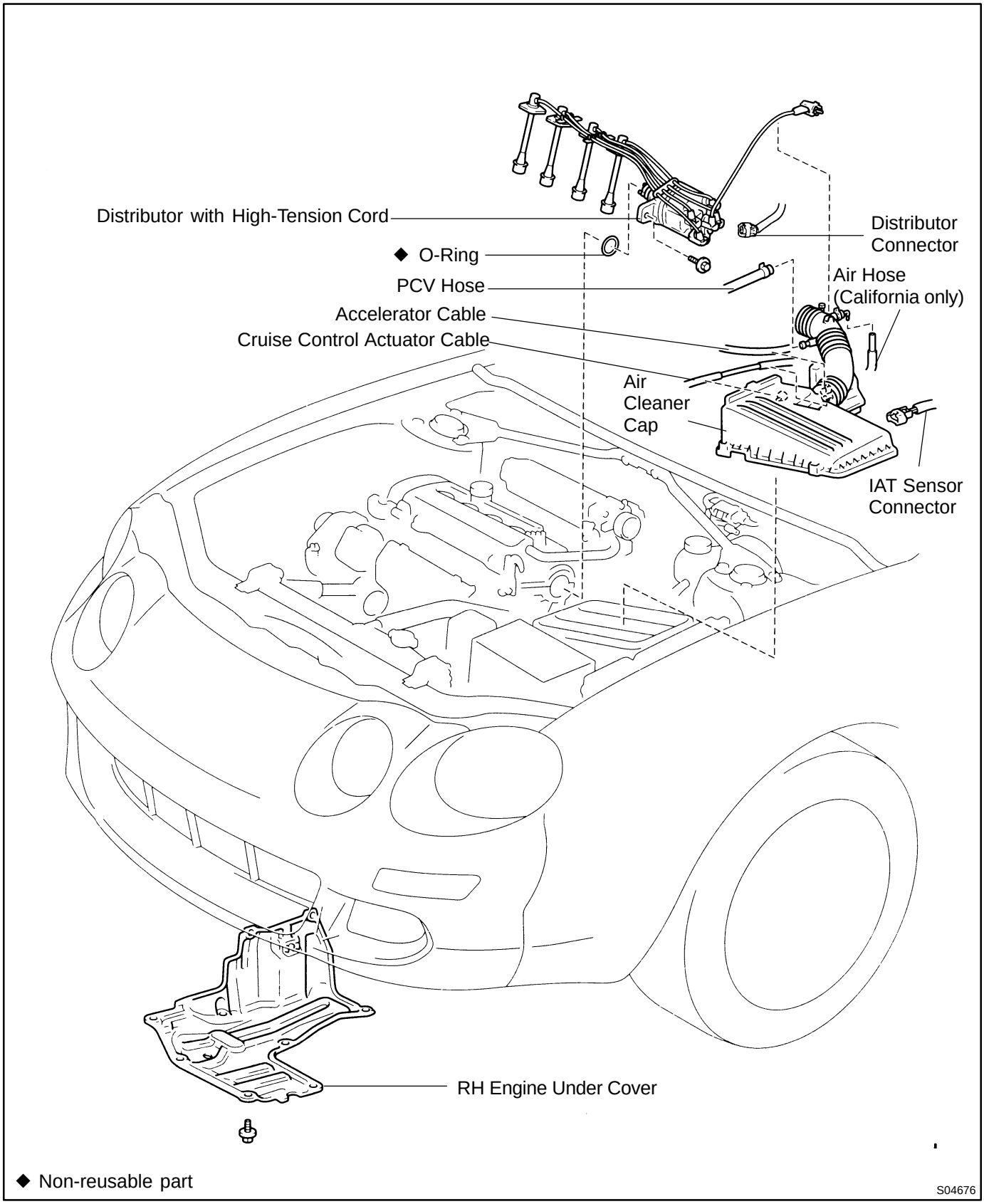

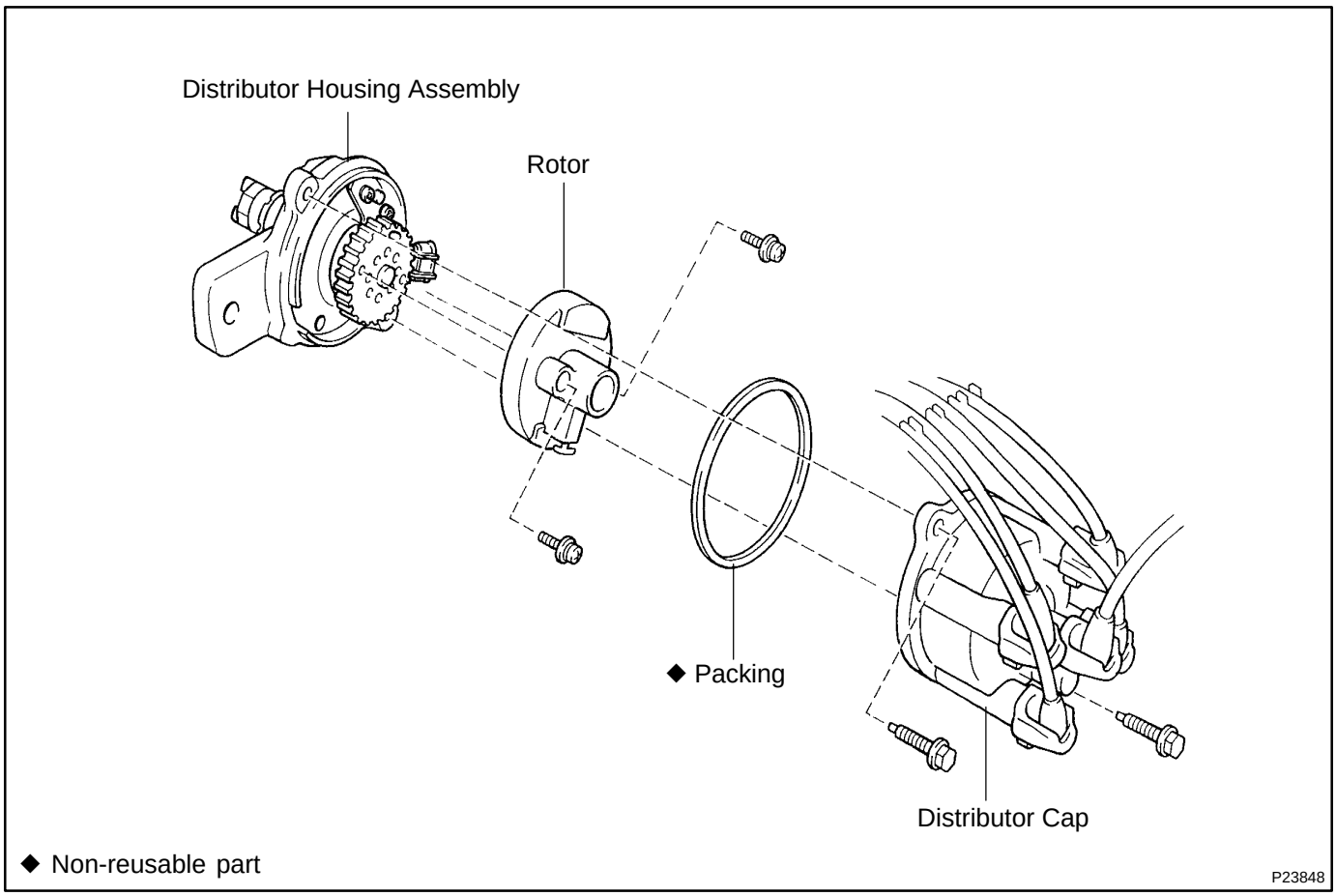
Distributor Housing Assembly
Rotor
◆ Packing
Distributor Cap
◆ Non-reusable part
P23848

CO18Y-01

COMPONENTS

NO. 1 COOLING FAN

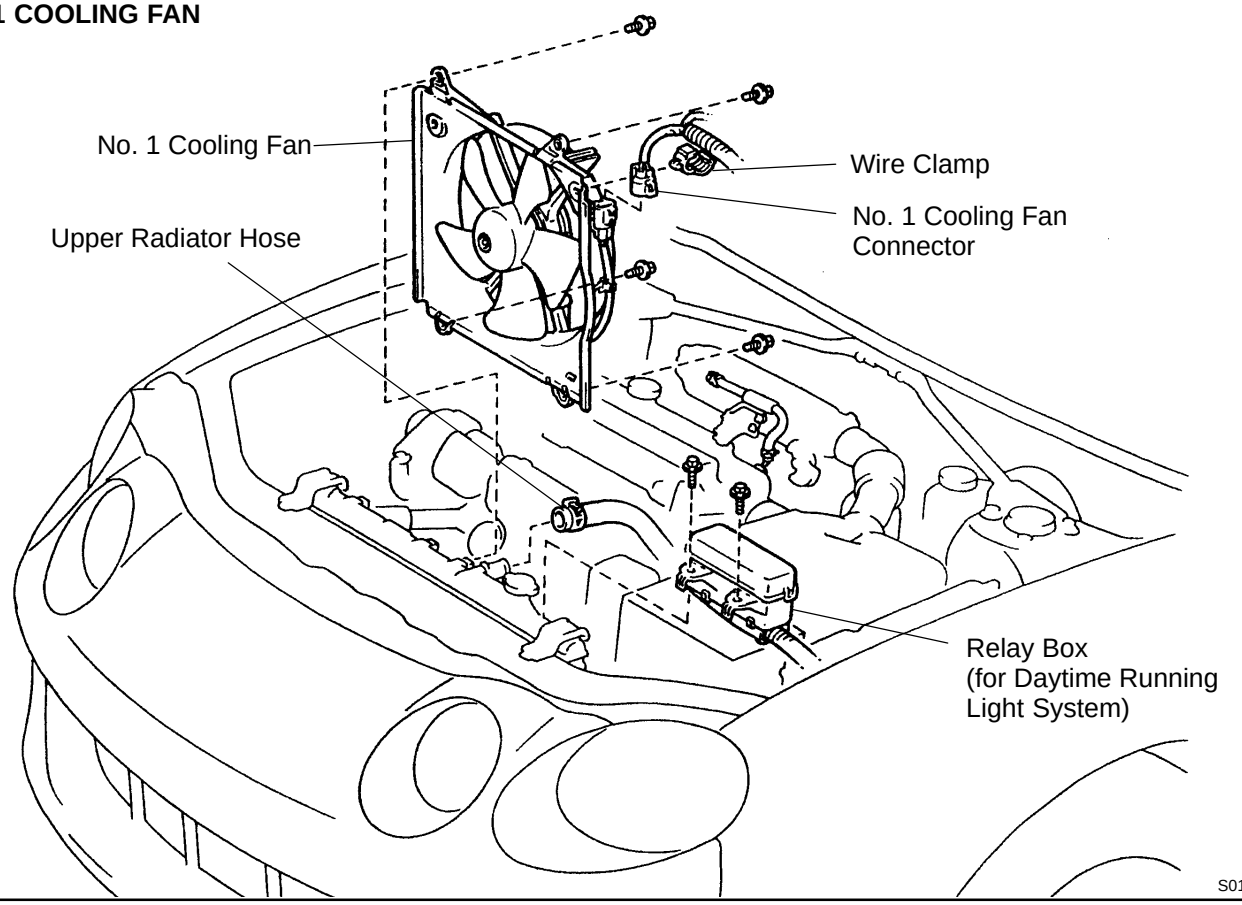

NO. 2 COOLING FAN

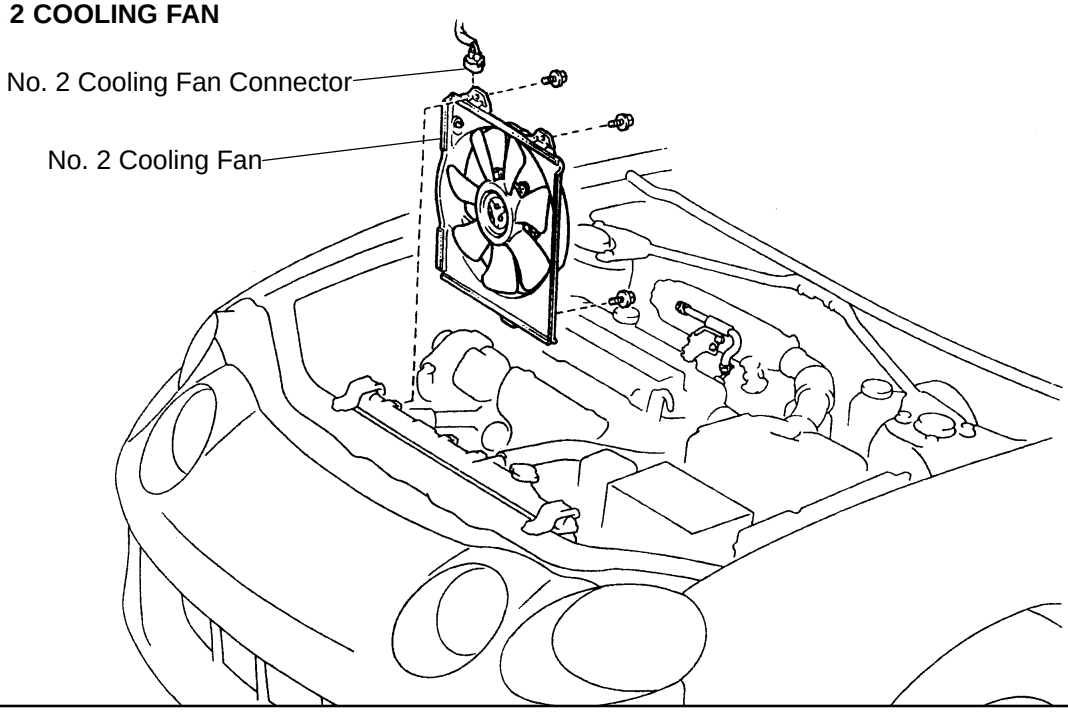

NO. 1 COOLING FAN

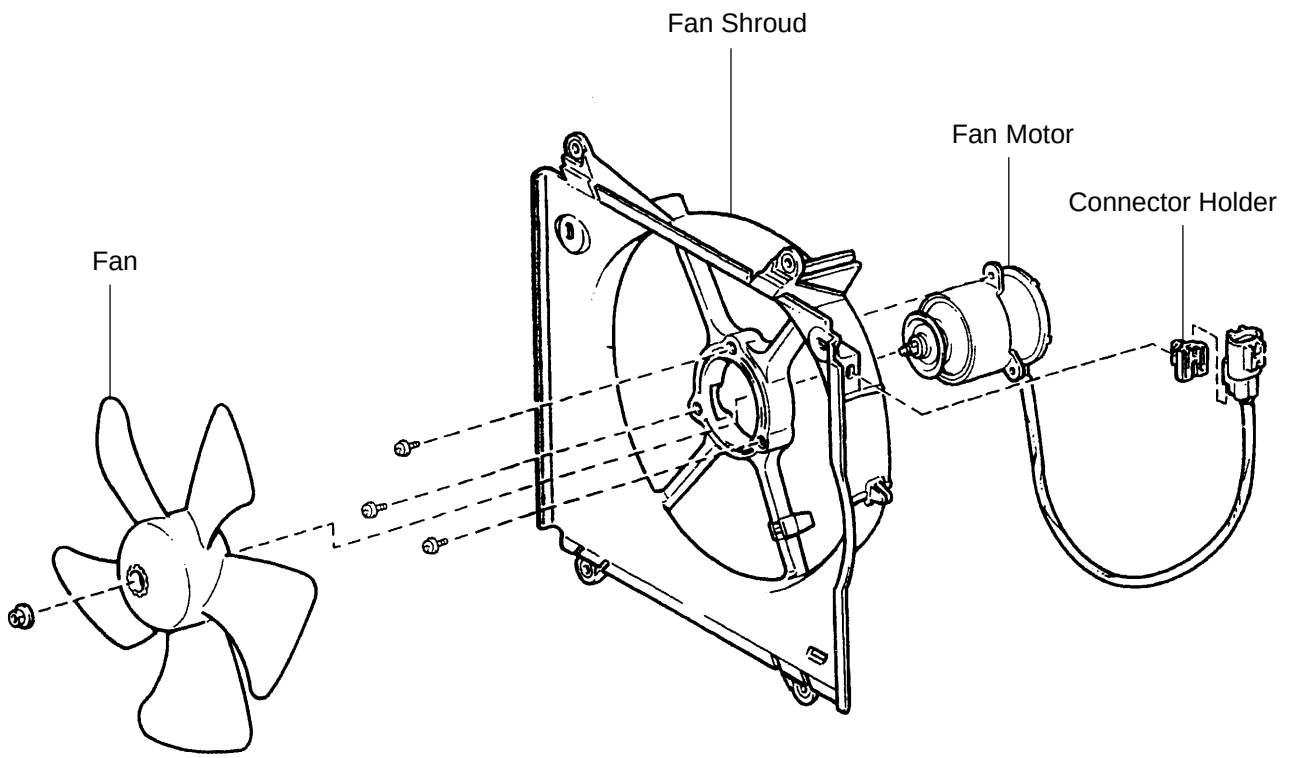

NO. 2 COOLING FAN

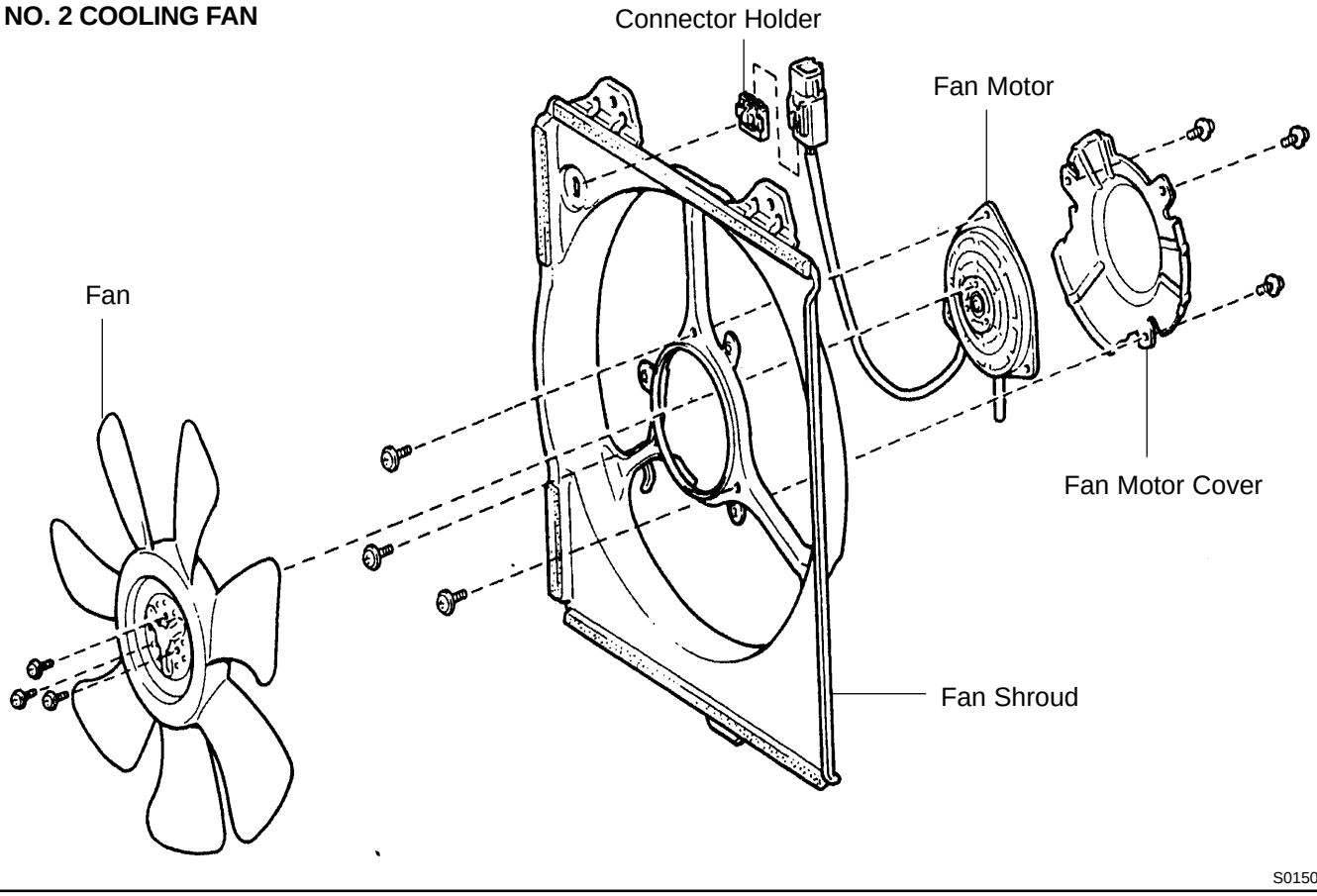

ENGINE CONTROL MODULE (ECM)

SF0W3-02

COMPONENTS

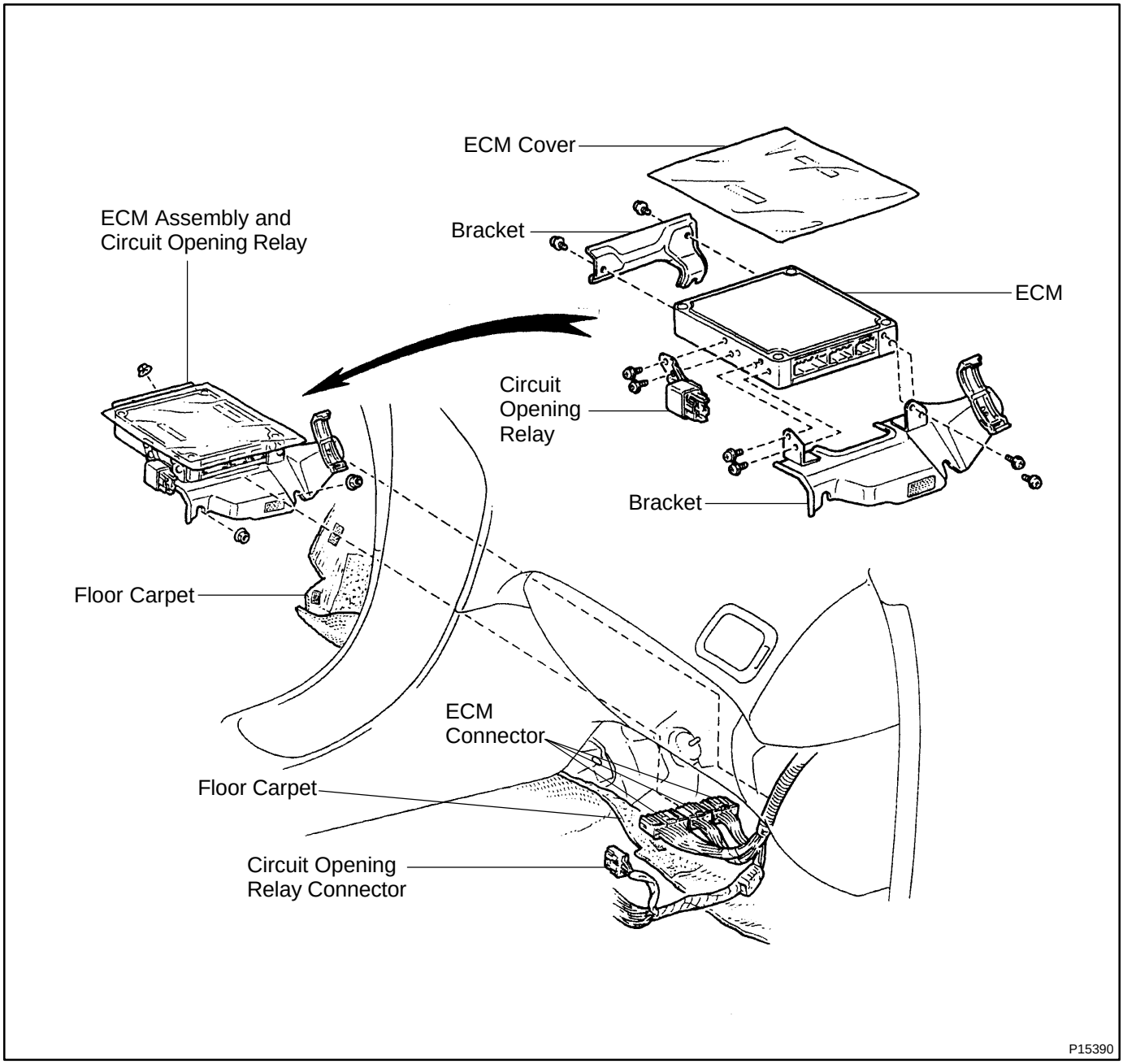

ENGINE UNIT

COMPONENTS

EM0JE-03

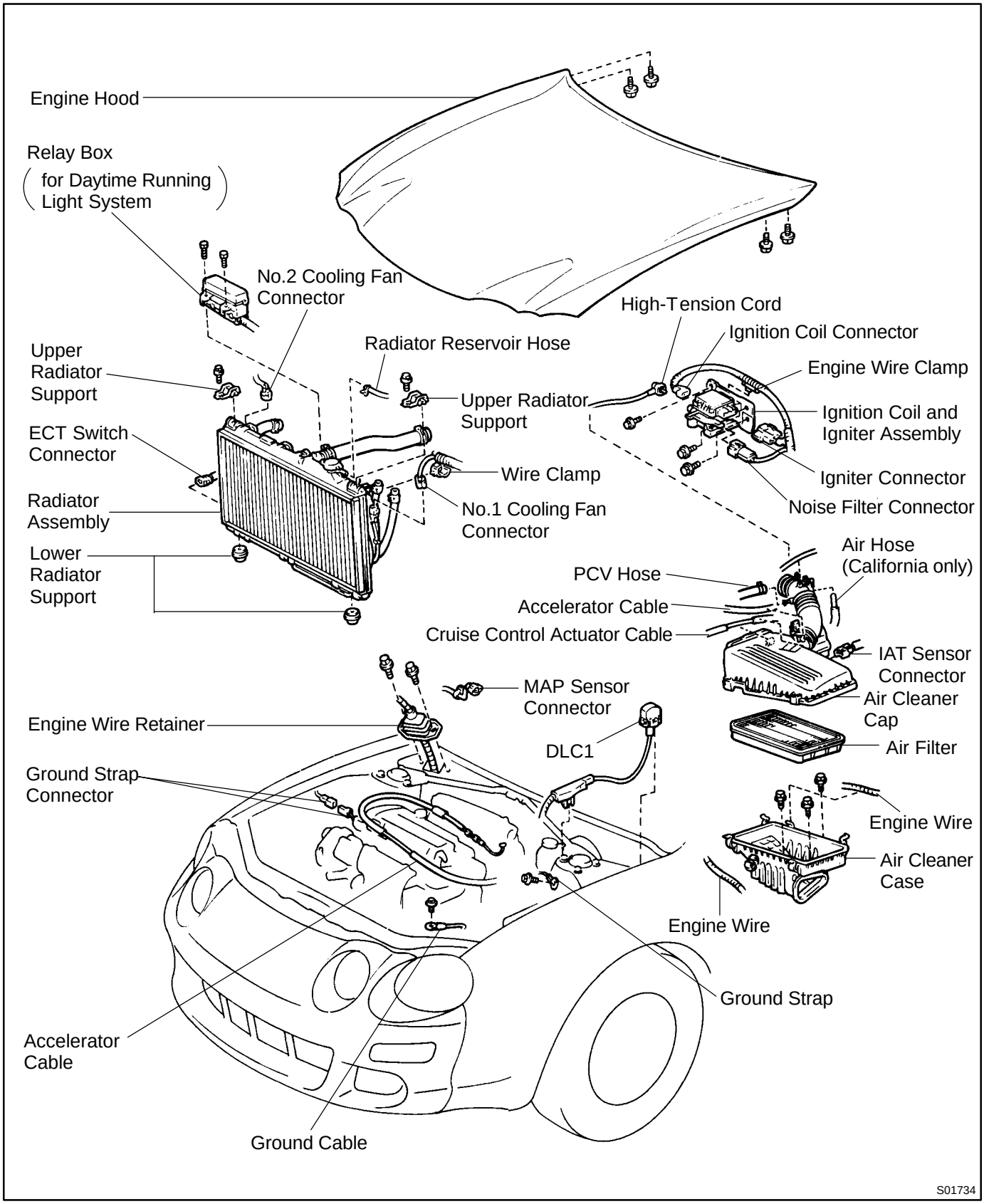

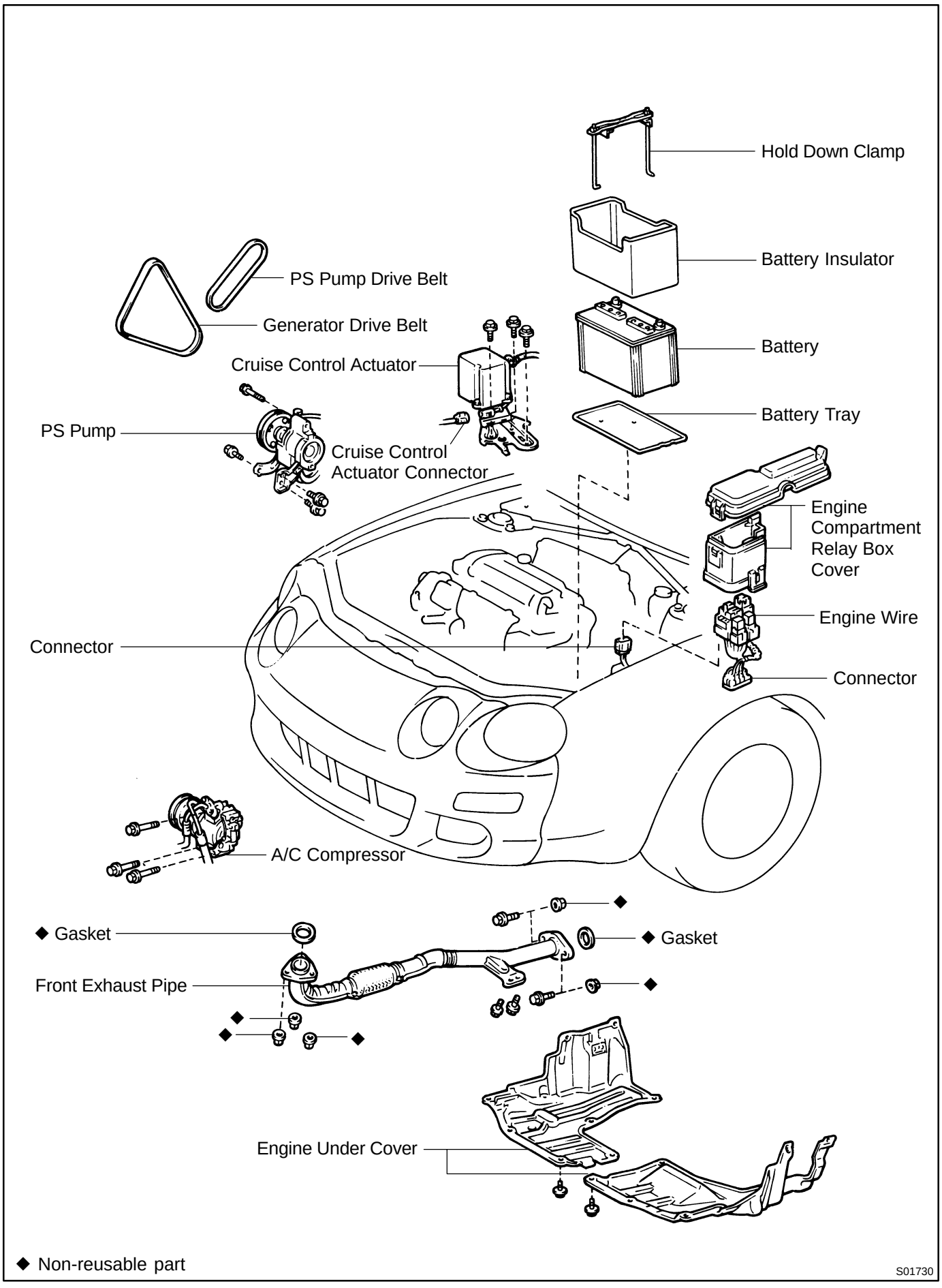
Hold Down Clamp
Battery Insulator
PS Pump Drive Belt
Generator Drive Belt
Battery
Cruise Control Actuator
Battery Tray
PS Pump
Cruise Control Actuator Connector
Engine Compartment Relay Box Cover
Engine Wire
Connector
Connector
A/C Compressor
◆ Gasket
◆ Gasket
Front Exhaust Pipe
Engine Under Cover
◆ Non-reusable part
S01730

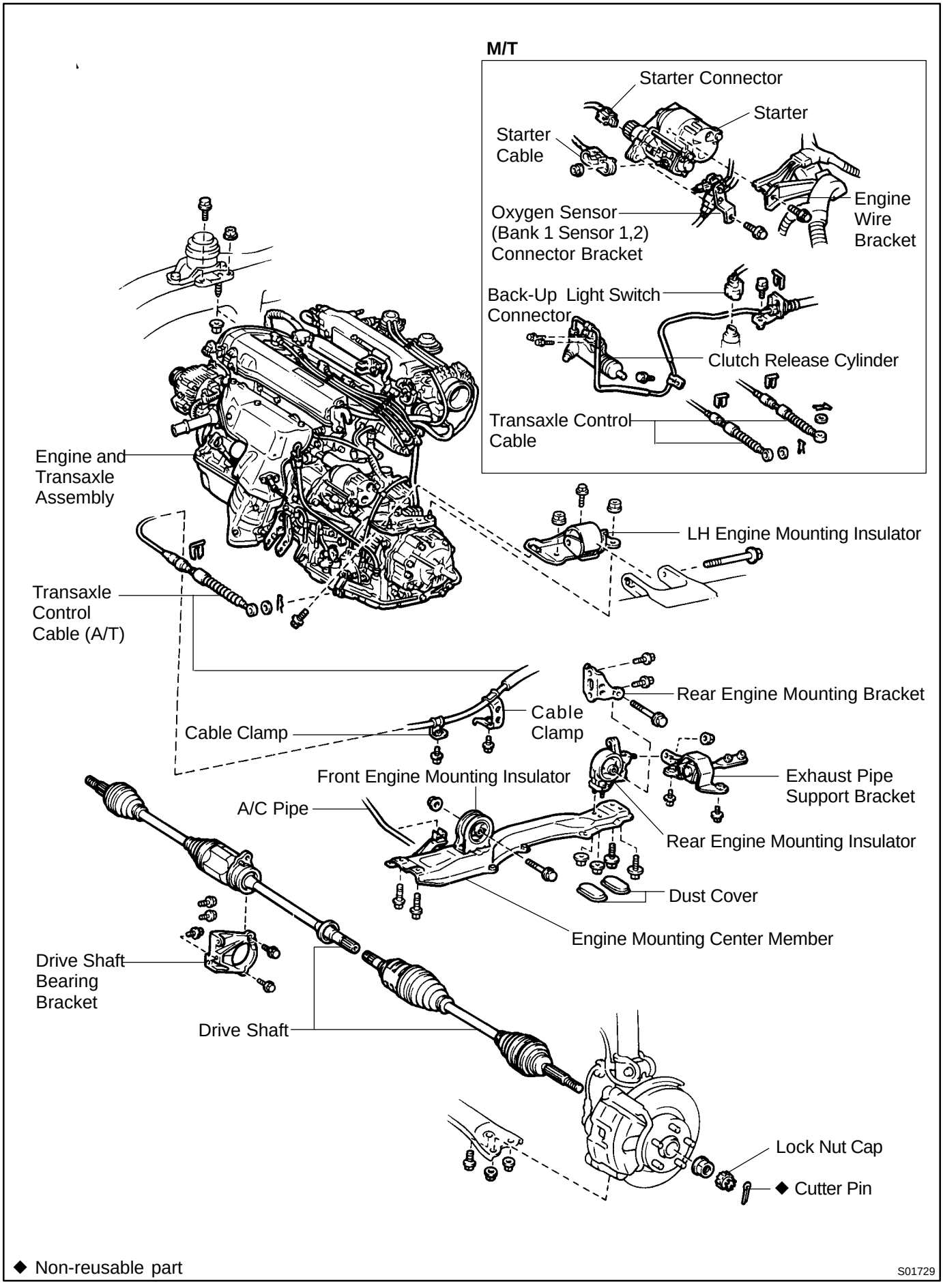
M/T
Starter Connector
Starter
Starter Cable
Oxygen Sensor (Bank 1 Sensor 1,2) Connector Bracket
Engine Wire Bracket
Back-Up Light Switch Connector
Clutch Release Cylinder
Transaxle Control Cable
Engine and Transaxle Assembly
LH Engine Mounting Insulator
Transaxle Control Cable (A/T)
Rear Engine Mounting Bracket
Cable Clamp
Cable Clamp
Front Engine Mounting Insulator
Exhaust Pipe Support Bracket
A/C Pipe
Rear Engine Mounting Insulator
Dust Cover
Engine Mounting Center Member
Drive Shaft Bearing Bracket
Drive Shaft
Lock Nut Cap
◆ Cutter Pin
◆ Non-reusable part
S01729

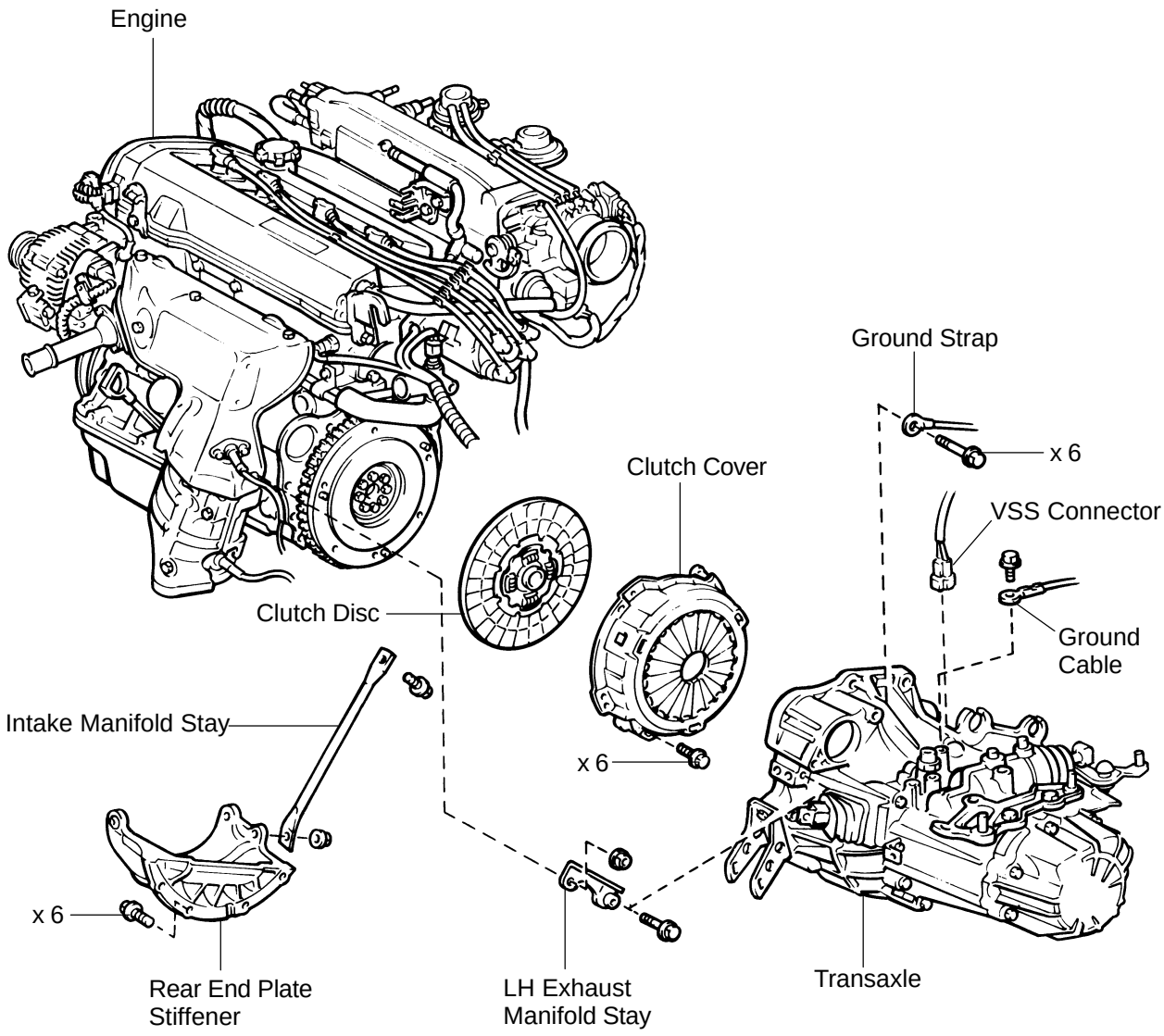
Engine
Ground Strap
x 6
Clutch Cover
VSS Connector
Clutch Disc
Ground
Cable
Intake Manifold Stay
x 6
x 6
Rear End Plate
Stiffener
LH Exhaust
Manifold Stay
Transaxle
S01702

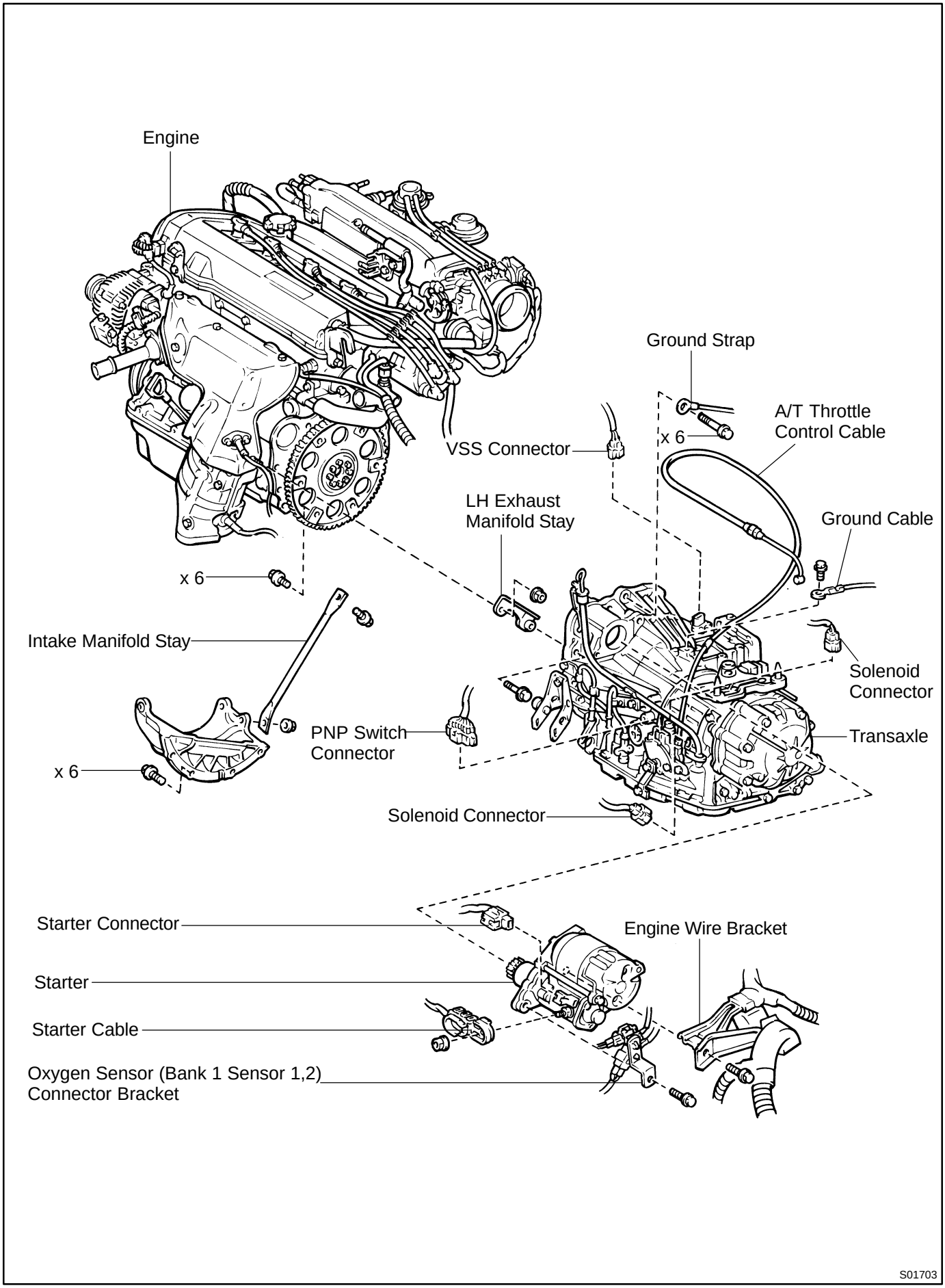
Engine
Ground Strap
x 6
A/T Throttle
Control Cable
VSS Connector
LH Exhaust
Manifold Stay
Ground Cable
x 6
Intake Manifold Stay
Solenoid
Connector
PNP Switch
Connector
Transaxle
x 6
Solenoid Connector
Starter Connector
Engine Wire Bracket
Starter
Starter Cable
Oxygen Sensor (Bank 1 Sensor 1,2)
Connector Bracket
S01703

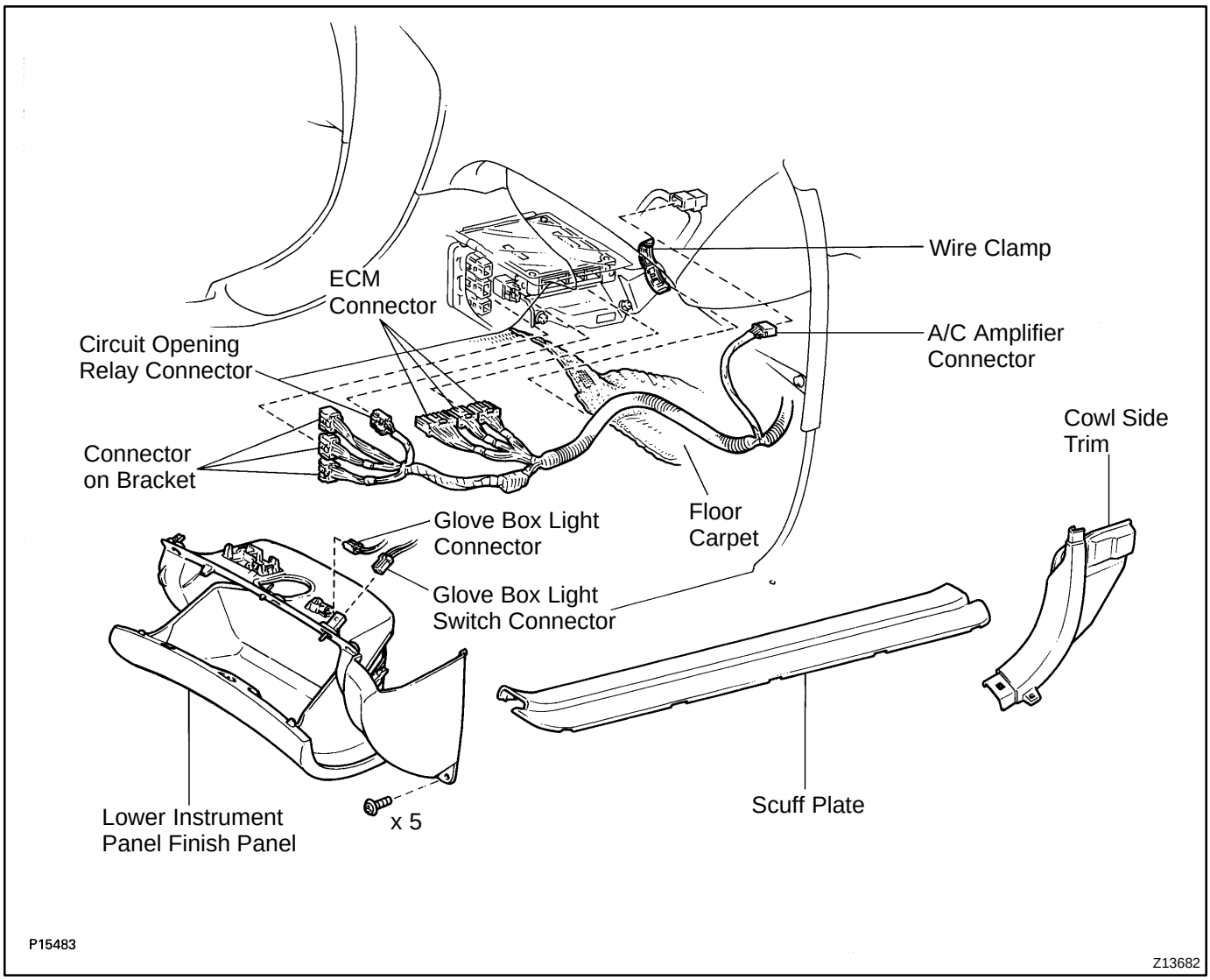
Wire Clamp
ECM
Connector
A/C Amplifier
Connector
Circuit Opening
Relay Connector
Cowl Side
Trim
Connector
on Bracket
Floor
Carpet
Glove Box Light
Connector
Glove Box Light
Switch Connector
Lower Instrument
Panel Finish Panel
x 5
Scuff Plate
P15483
Z13682

EXHAUST SYSTEM

EM0JM-02

COMPONENTS

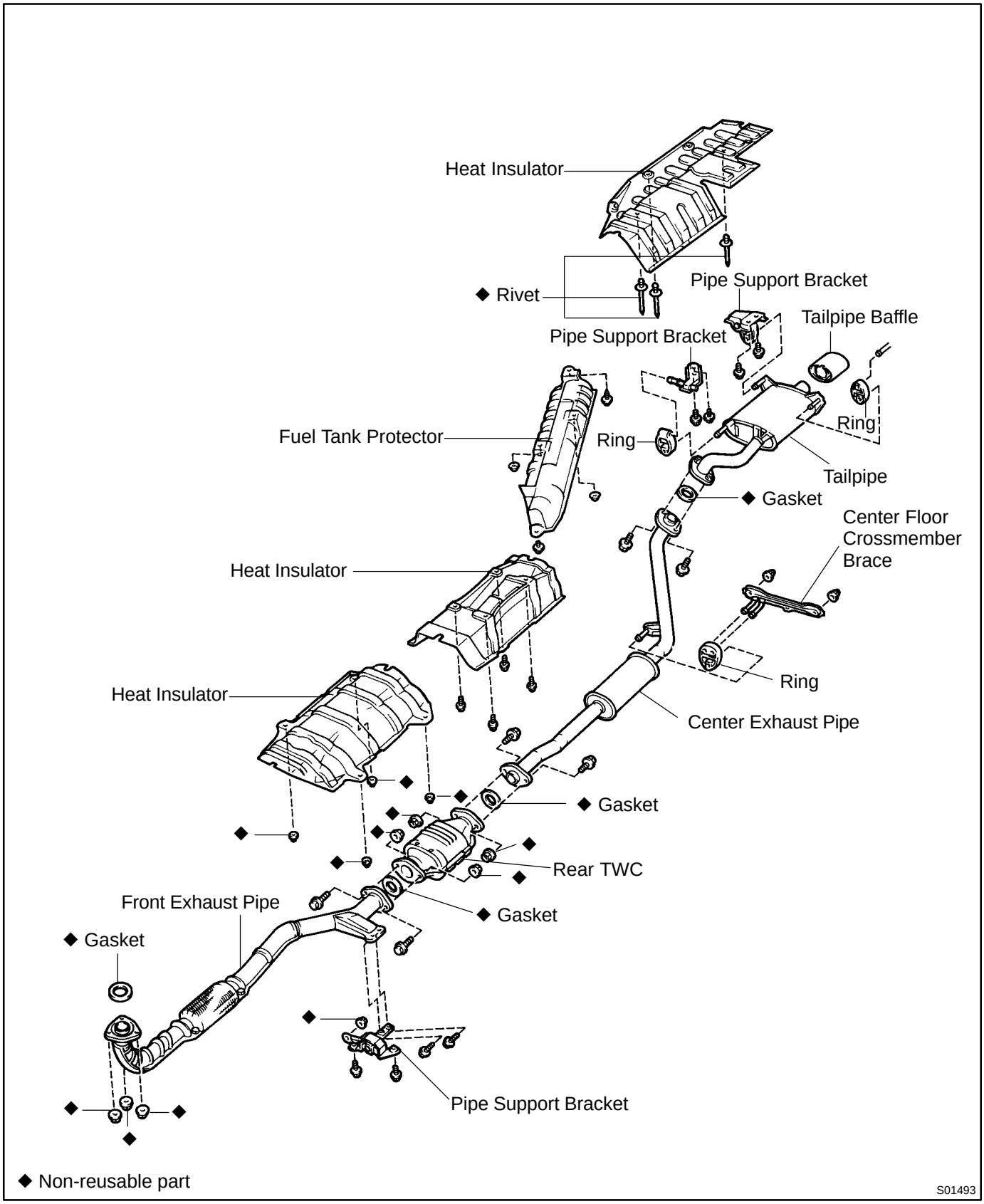

FUEL PRESSURE REGULATOR

COMPONENTS

SF0V1-02

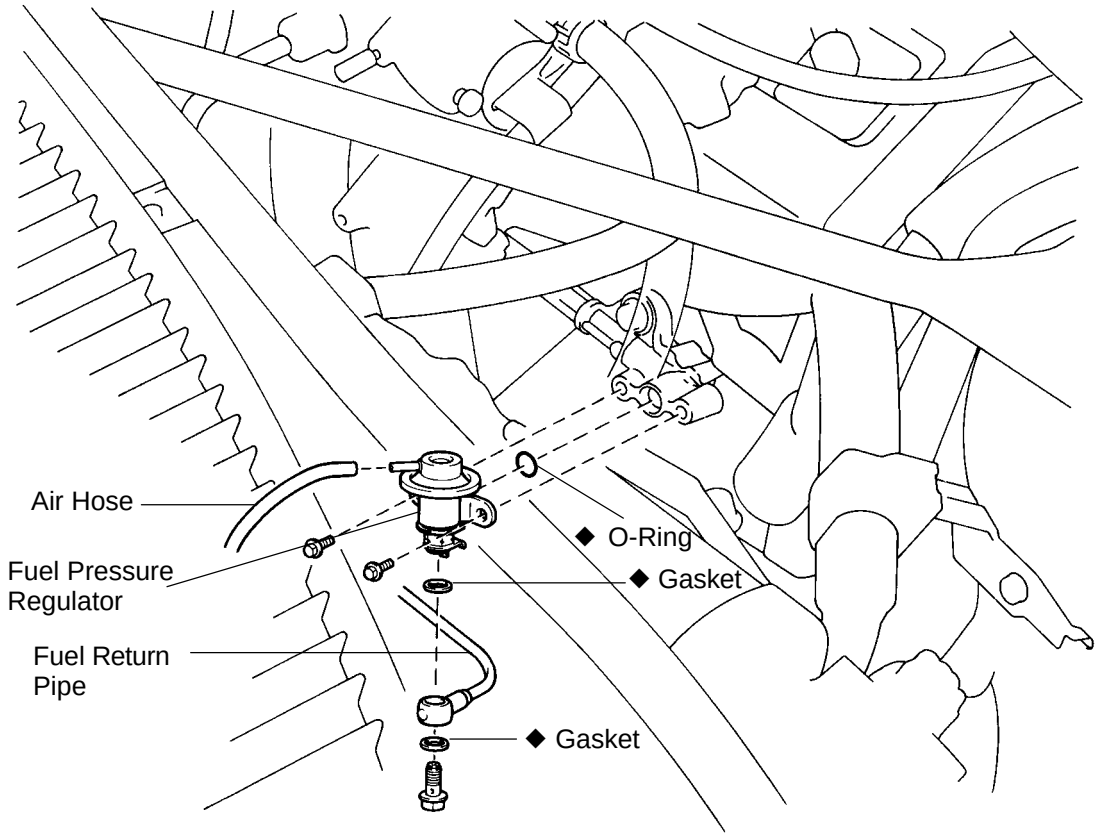

◆ Non-reusable part

S01475

FUEL TANK AND LINE

SF0V9-02

COMPONENTS

- **Always use new gaskets when replacing the fuel tank or component parts.**
- **Apply the proper torque to all parts tightened.**

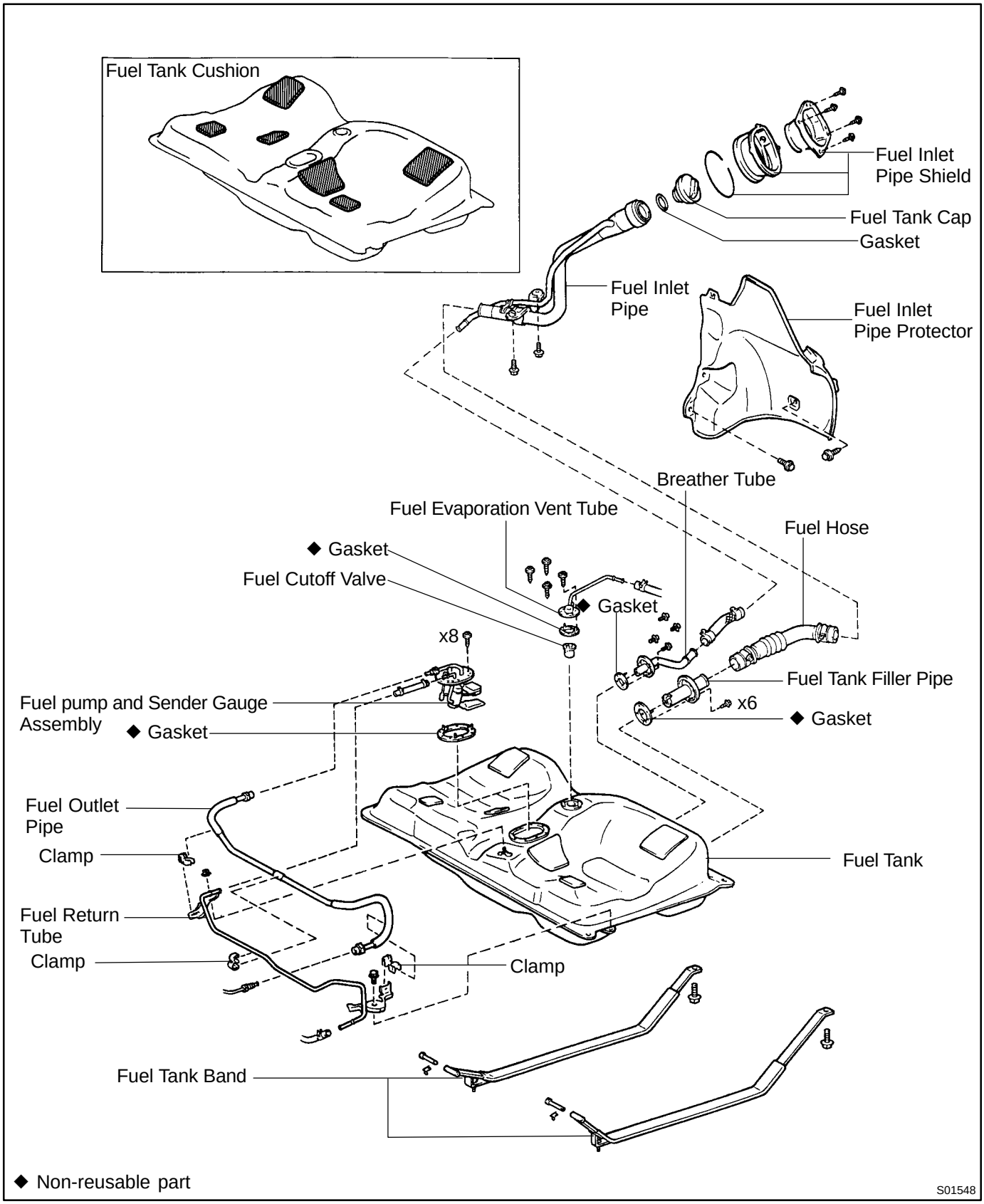

GENERATOR

COMPONENTS

CH05Y-03

w/ A/C

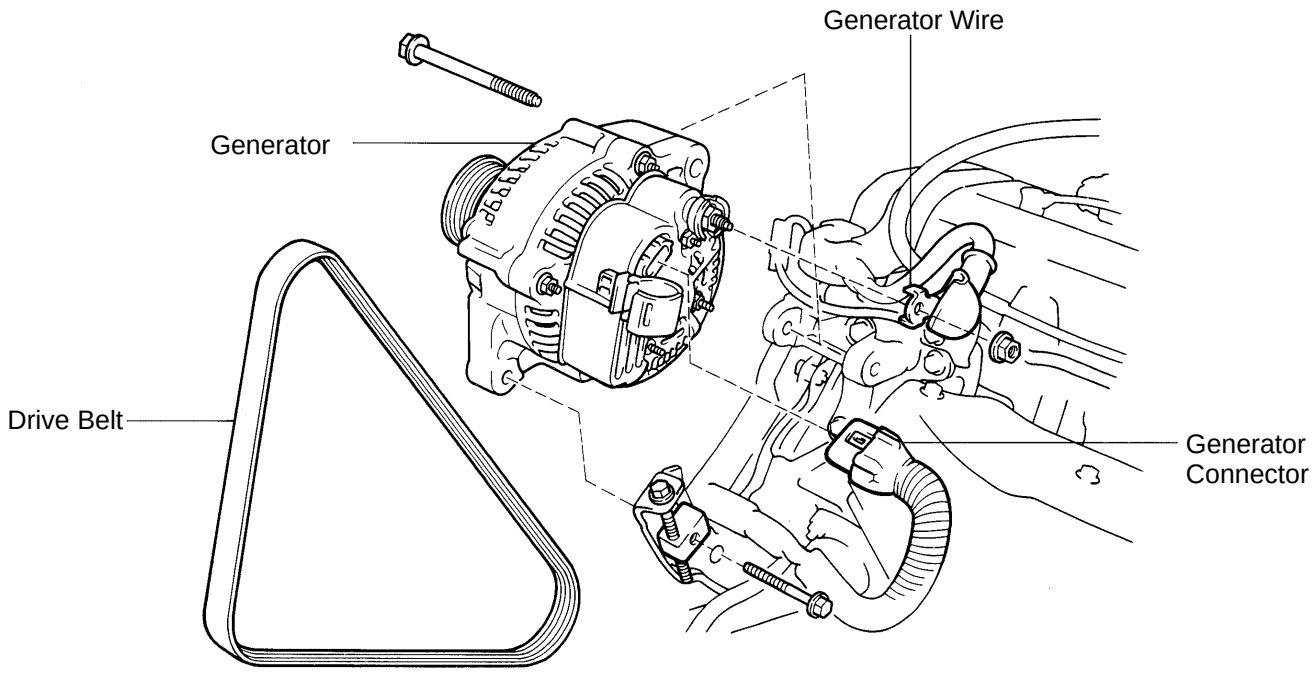

w/oA/C

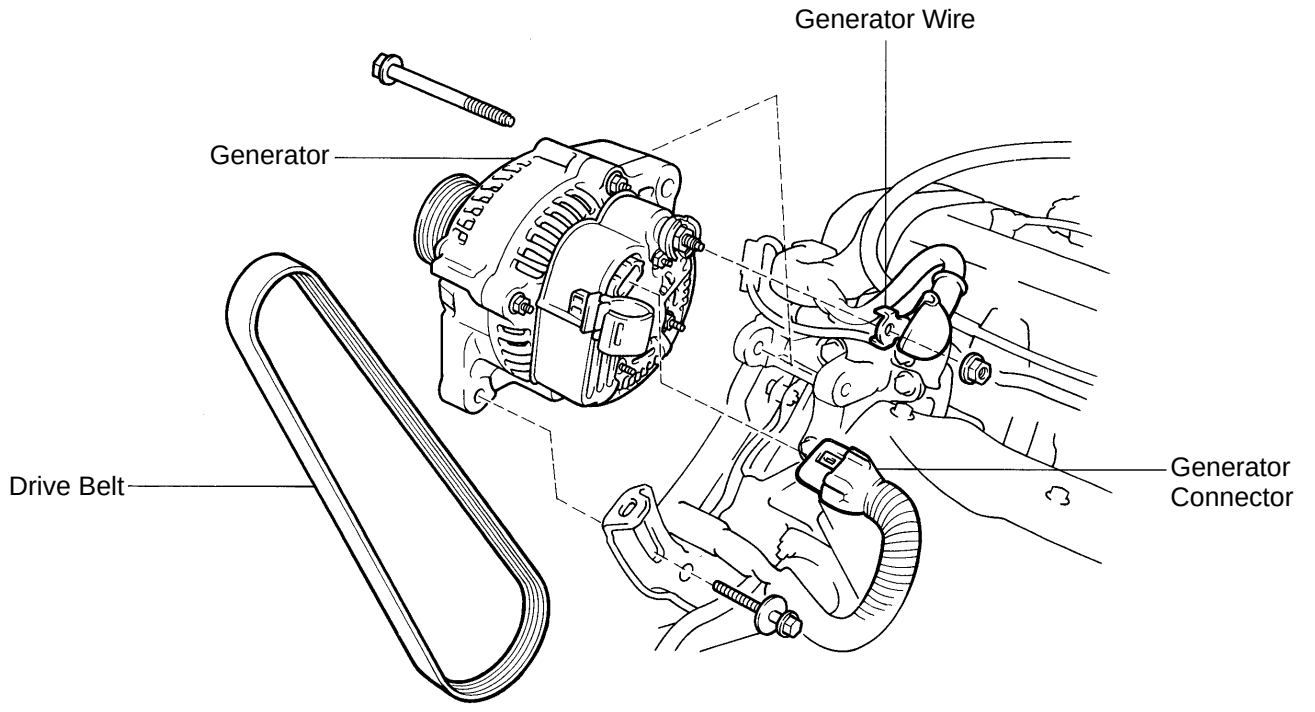

P15505
P15504

Z11337

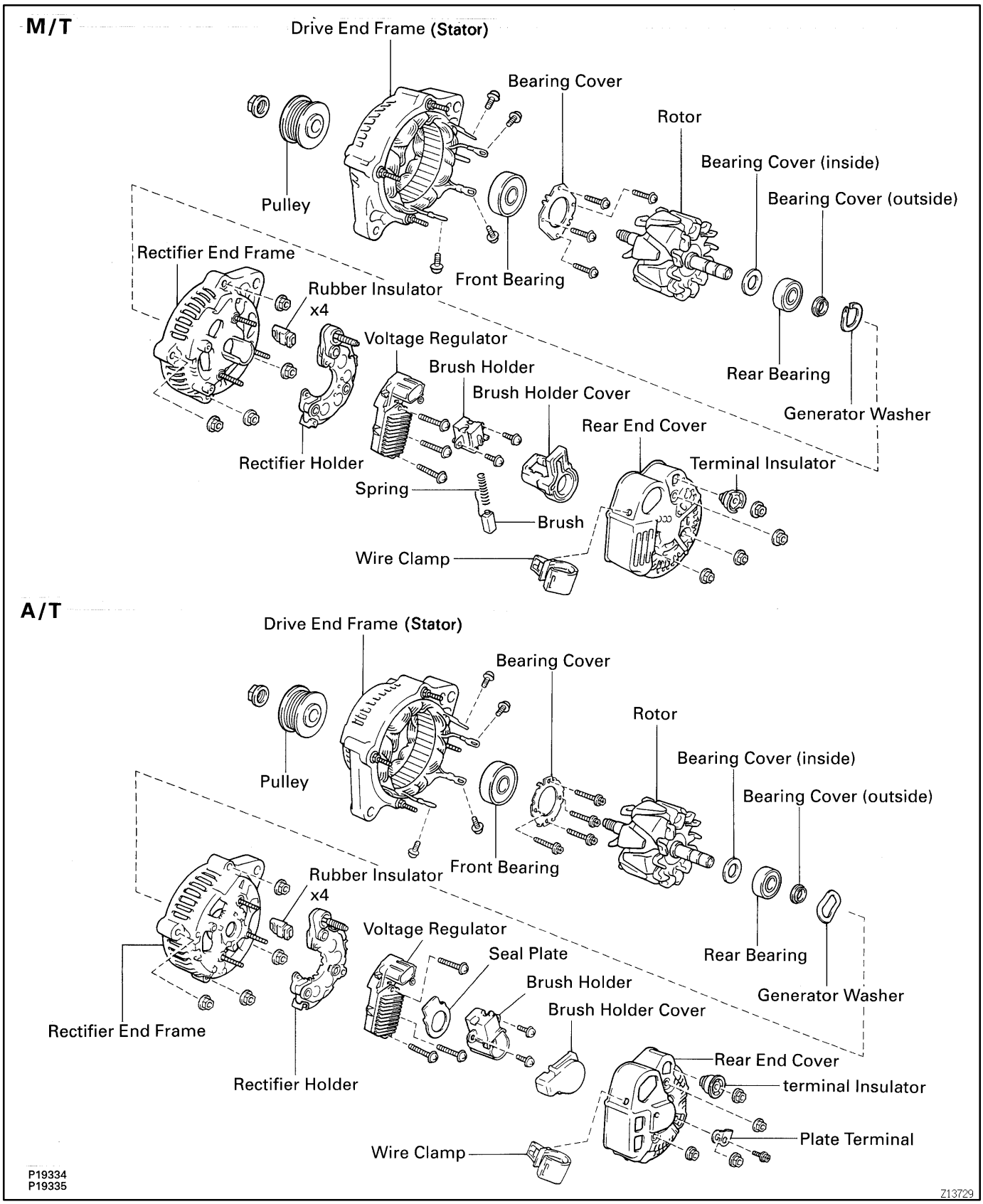
M/T
Drive End Frame (Stator)
Bearing Cover
Rotor
Bearing Cover (inside)
Bearing Cover (outside)
Pulley
Rectifier End Frame
Front Bearing
Rubber Insulator
x4
Voltage Regulator
Brush Holder
Brush Holder Cover
Rear Bearing
Generator Washer
Rear End Cover
Terminal Insulator
Rectifier Holder
Spring
Brush
Wire Clamp
A/T
Drive End Frame (Stator)
Bearing Cover
Rotor
Bearing Cover (inside)
Bearing Cover (outside)
Pulley
Front Bearing
Rubber Insulator
x4
Voltage Regulator
Seal Plate
Brush Holder
Brush Holder Cover
Rear Bearing
Generator Washer
Rectifier End Frame
Rectifier Holder
Rear End Cover
terminal Insulator
Plate Terminal
Wire Clamp
P19334
P19335
Z13729

SF0V5-05

COMPONENTS

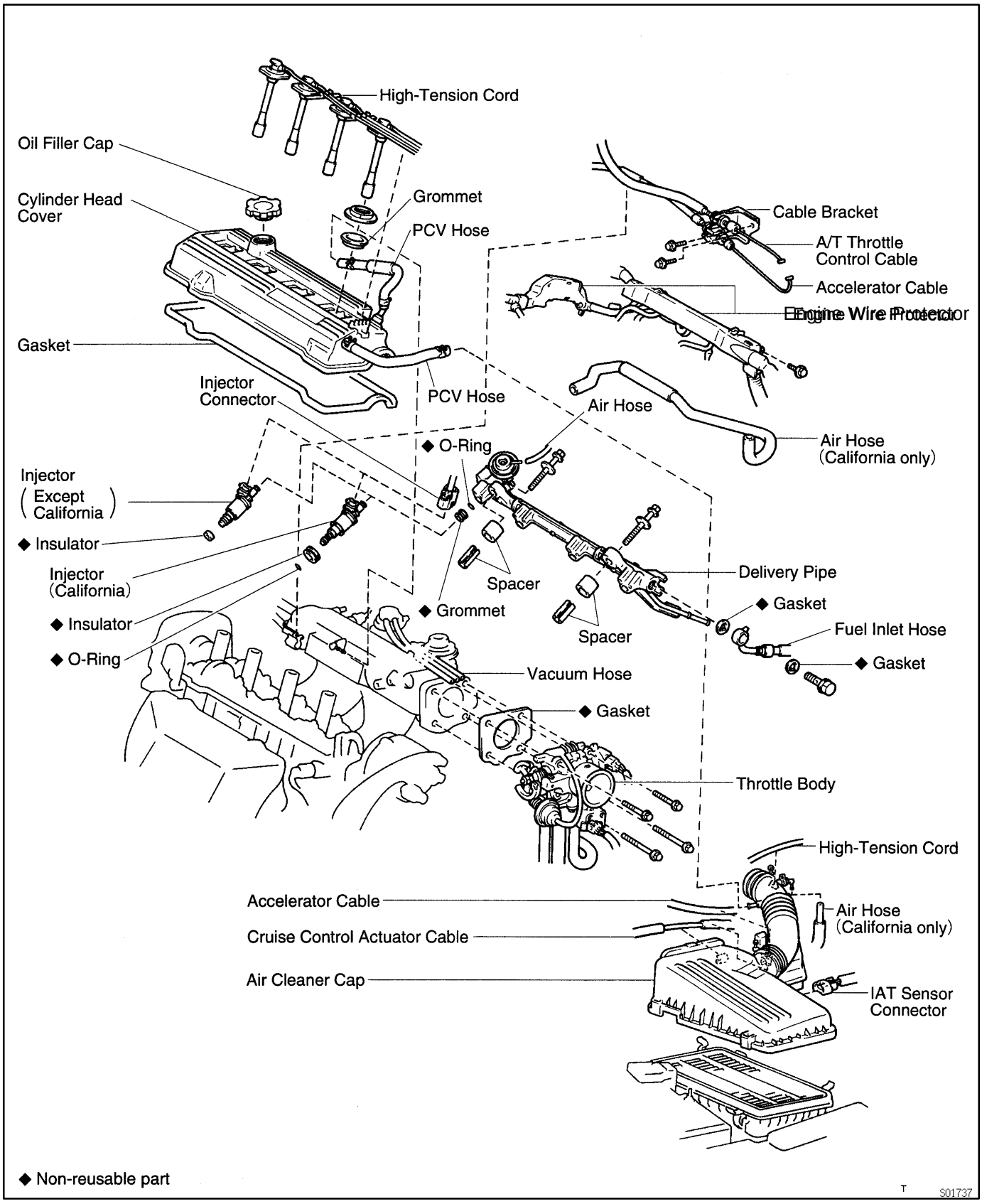

KNOCK SENSOR

COMPONENTS

SF0VX-02

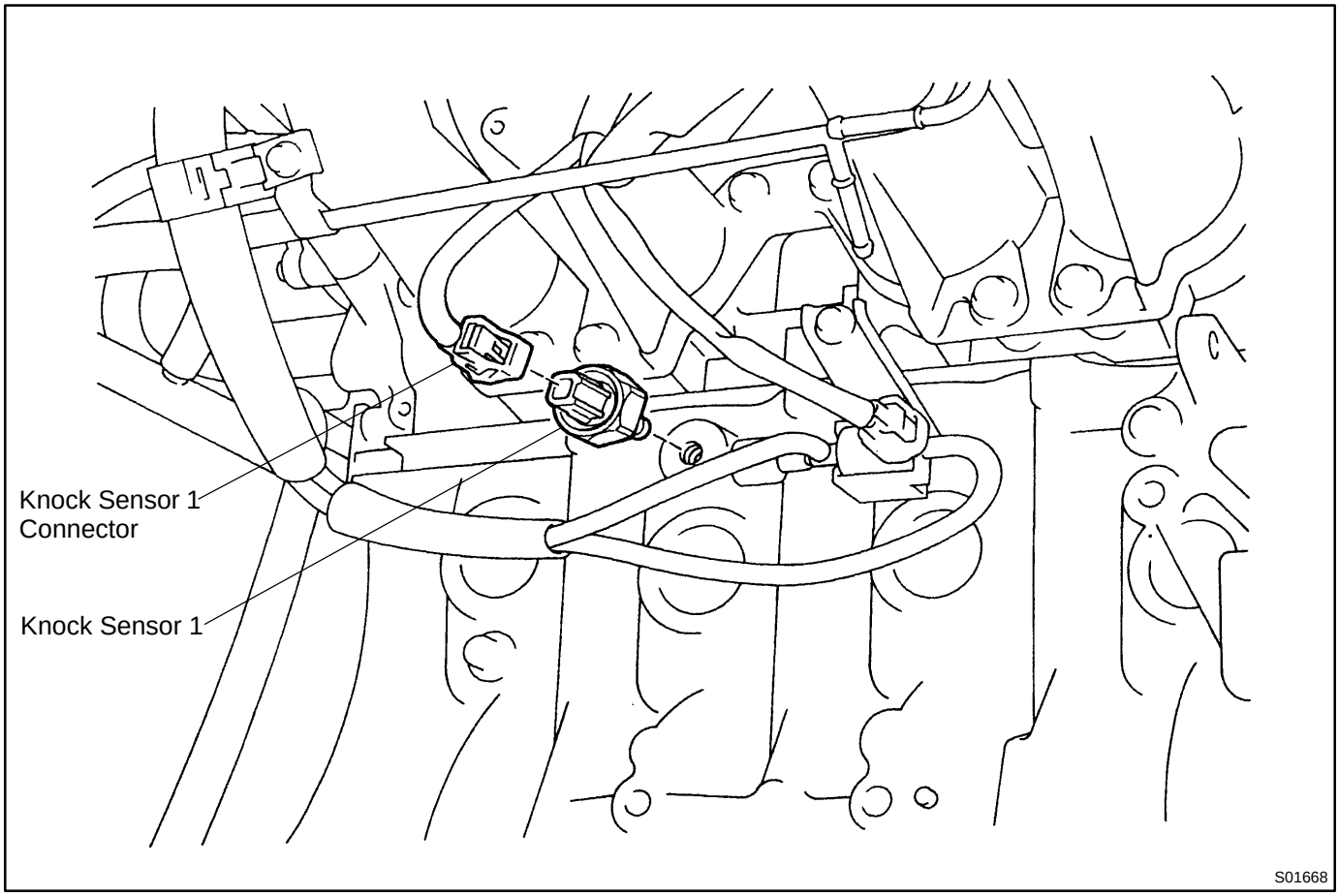

OIL COOLER

COMPONENTS

LU085-01

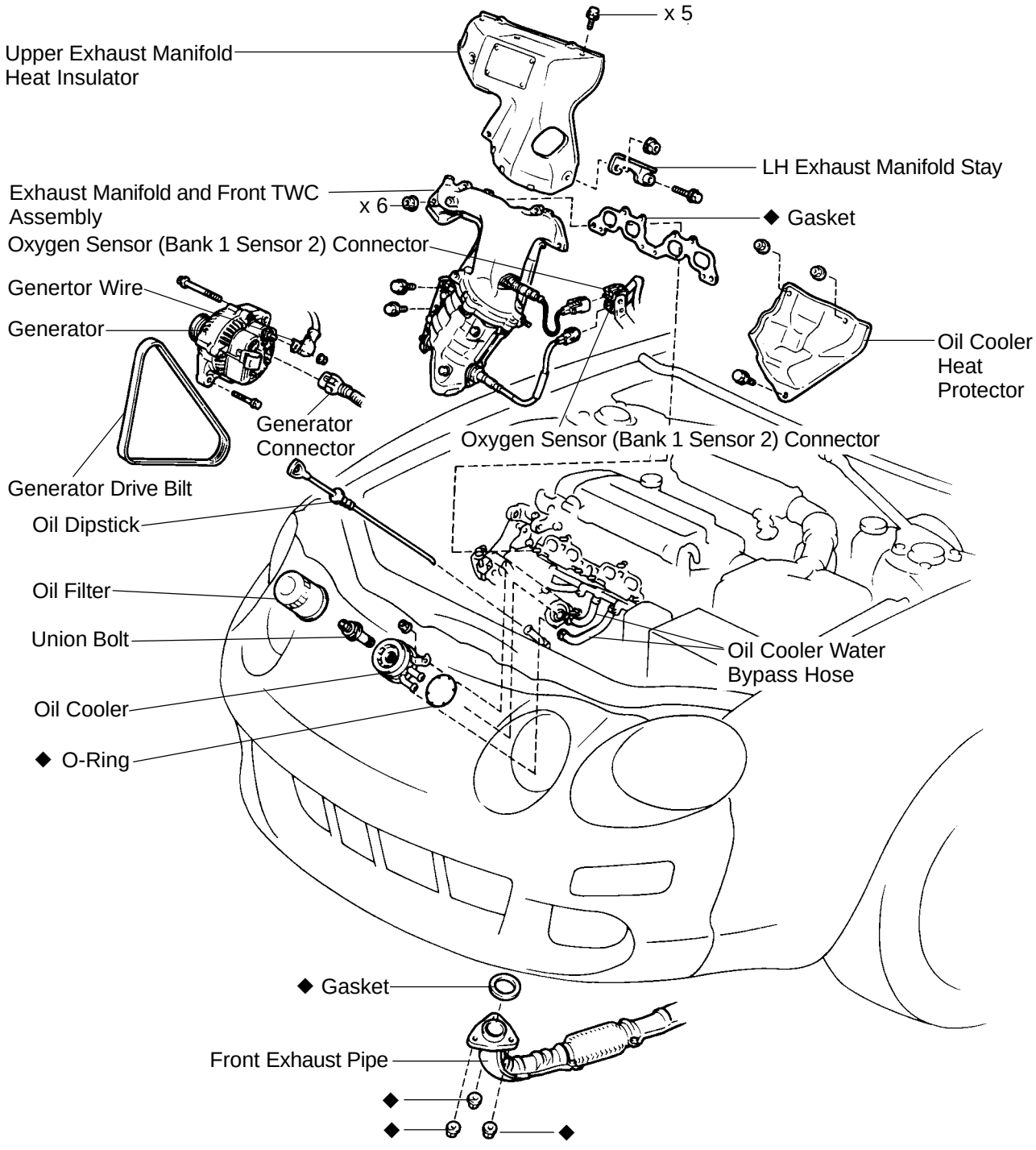

N·m (kgf·cm, ft·lbf) : Specified torque

S05934

OIL PUMP

COMPONENTS

LU07Y-02

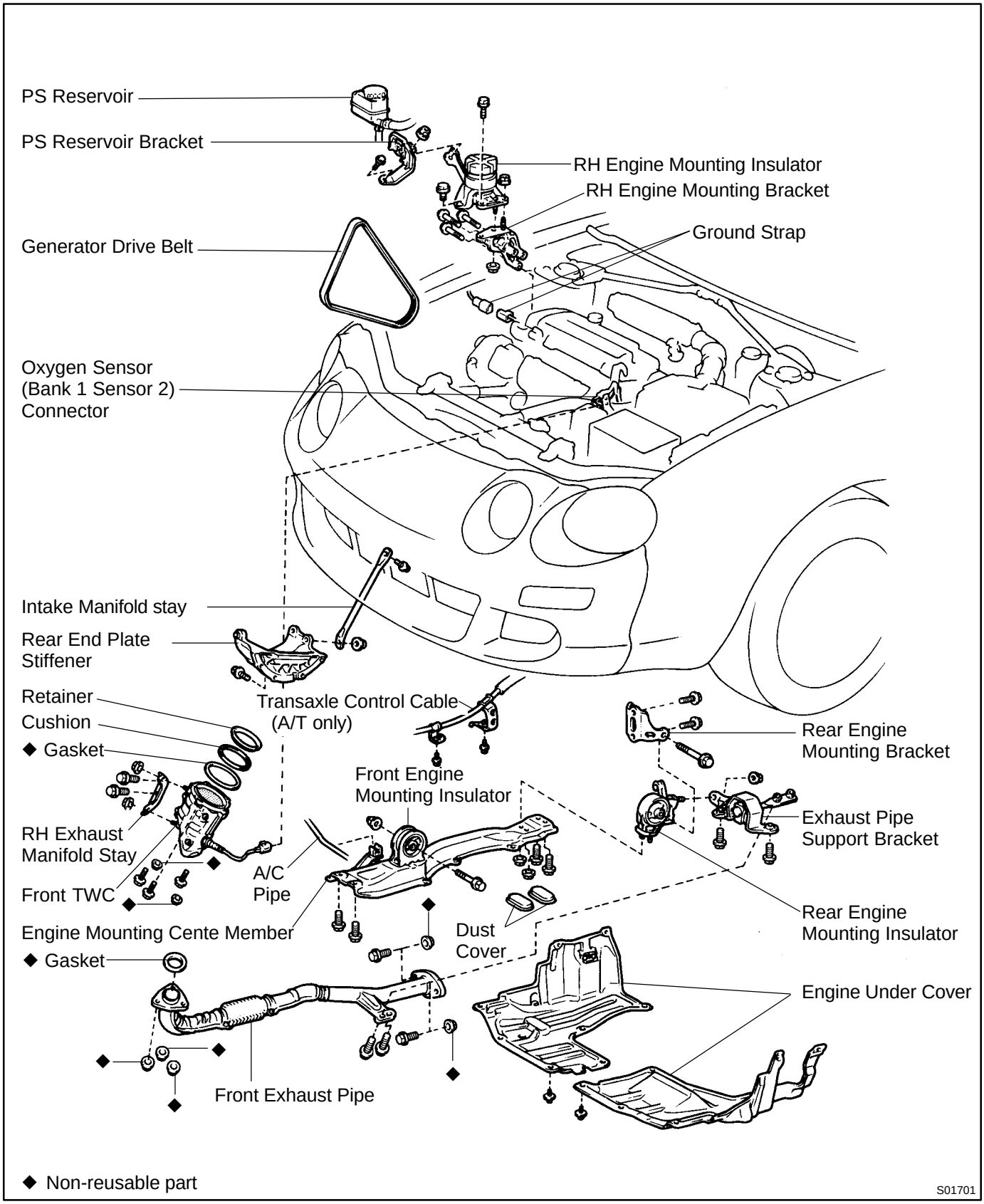

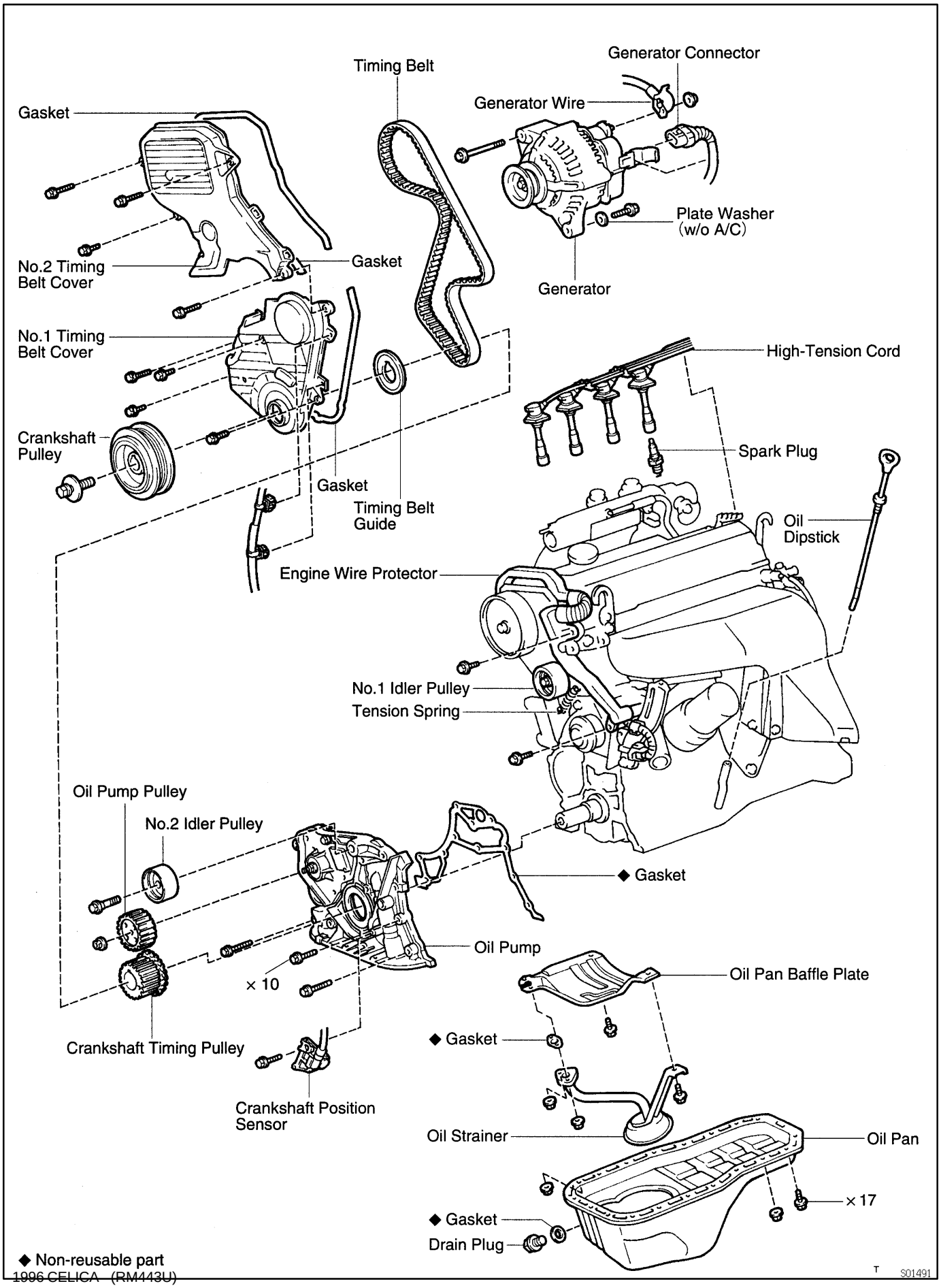
Timing Belt
Generator Connector
Generator Wire
Gasket
Plate Washer
(w/o A/C)
No.2 Timing
Belt Cover
Gasket
Generator
No.1 Timing
Belt Cover
High-Tension Cord
Crankshaft
Pulley
Spark Plug
Gasket
Timing Belt
Guide
Oil
Dipstick
Engine Wire Protector
No.1 Idler Pulley
Tension Spring
Oil Pump Pulley
No.2 Idler Pulley
◆ Gasket
Oil Pump
Oil Pan Baffle Plate
× 10
◆ Gasket
Crankshaft Timing Pulley
Crankshaft Position
Sensor
Oil Strainer
Oil Pan
× 17
◆ Gasket
Drain Plug
◆ Non-reusable part
T
S01491

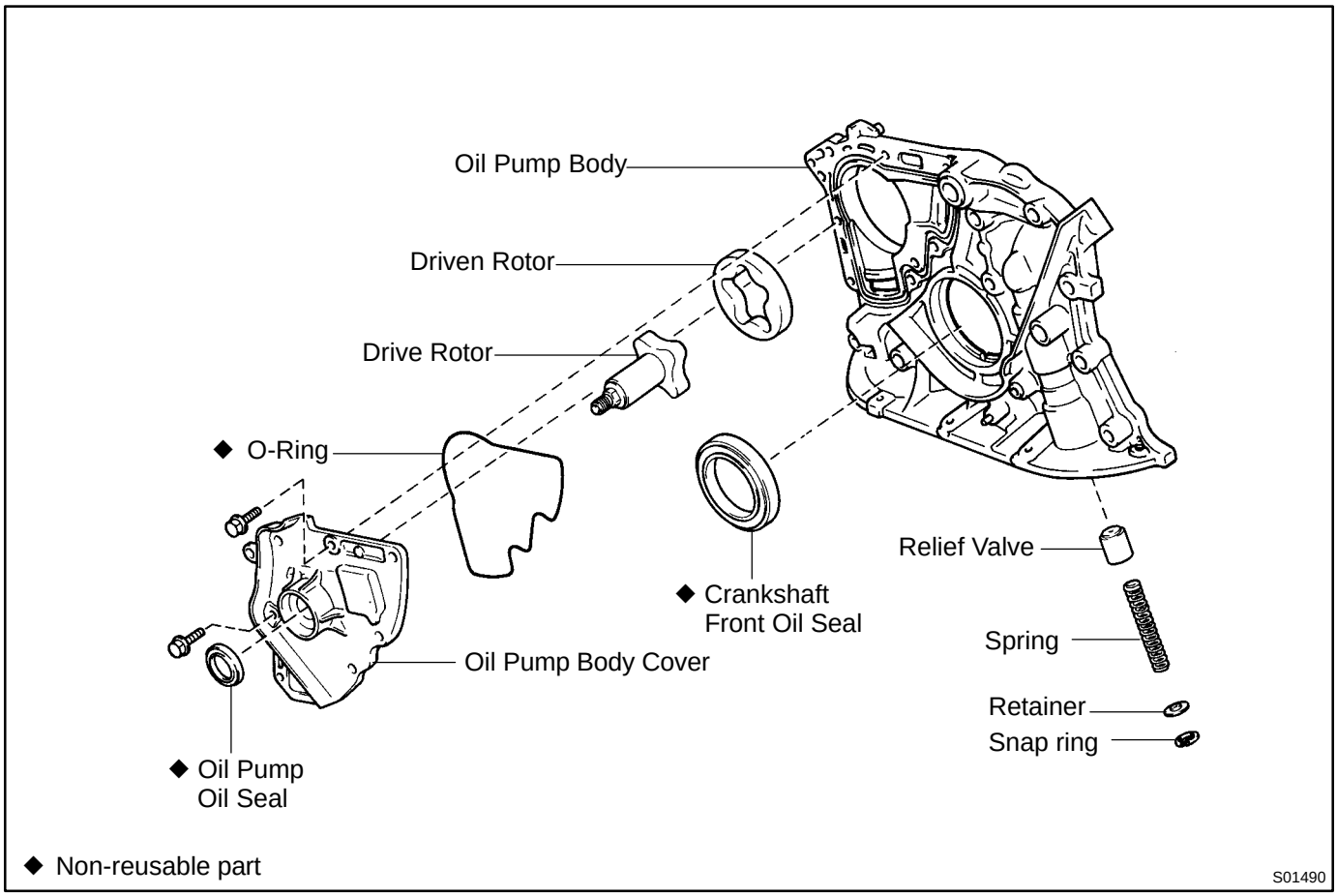
Oil Pump Body
Driven Rotor
Drive Rotor
◆ O-Ring
◆ Crankshaft
Front Oil Seal
Relief Valve
Spring
Retainer
Snap ring
Oil Pump Body Cover
◆ Oil Pump
Oil Seal
◆ Non-reusable part
S01490

CO0GJ-02

COMPONENTS

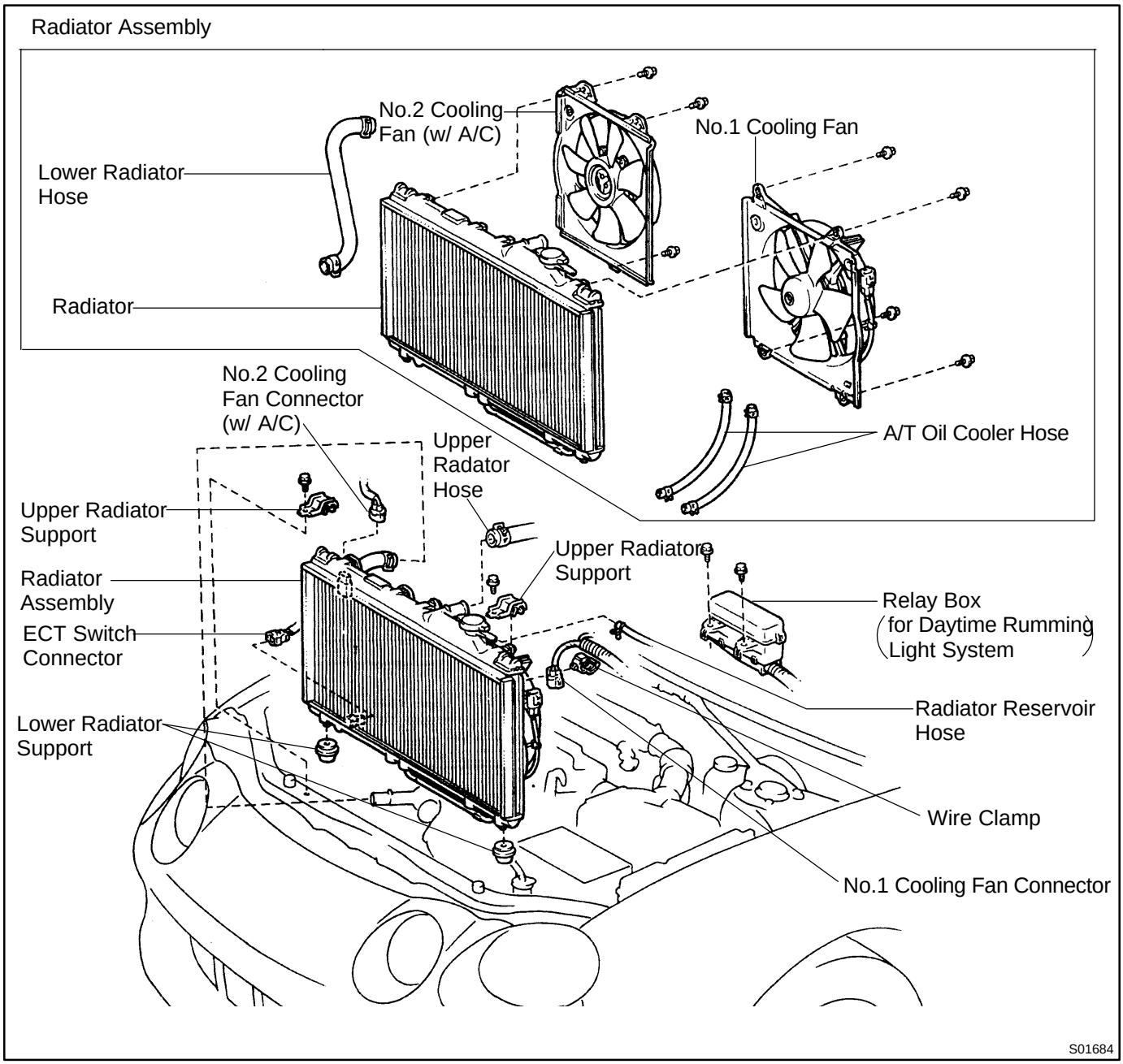

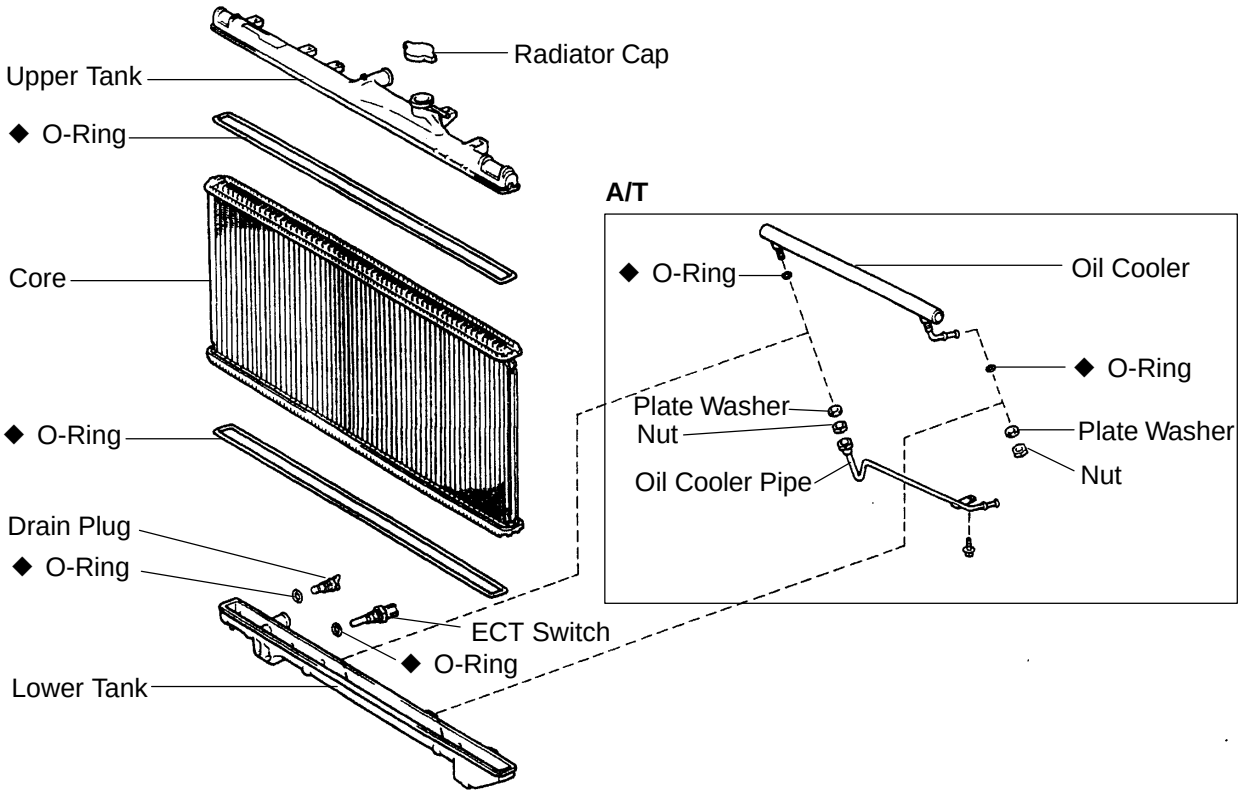

◆ Non-reuasble part

S01739

STARTER

COMPONENTS

ST07P-03

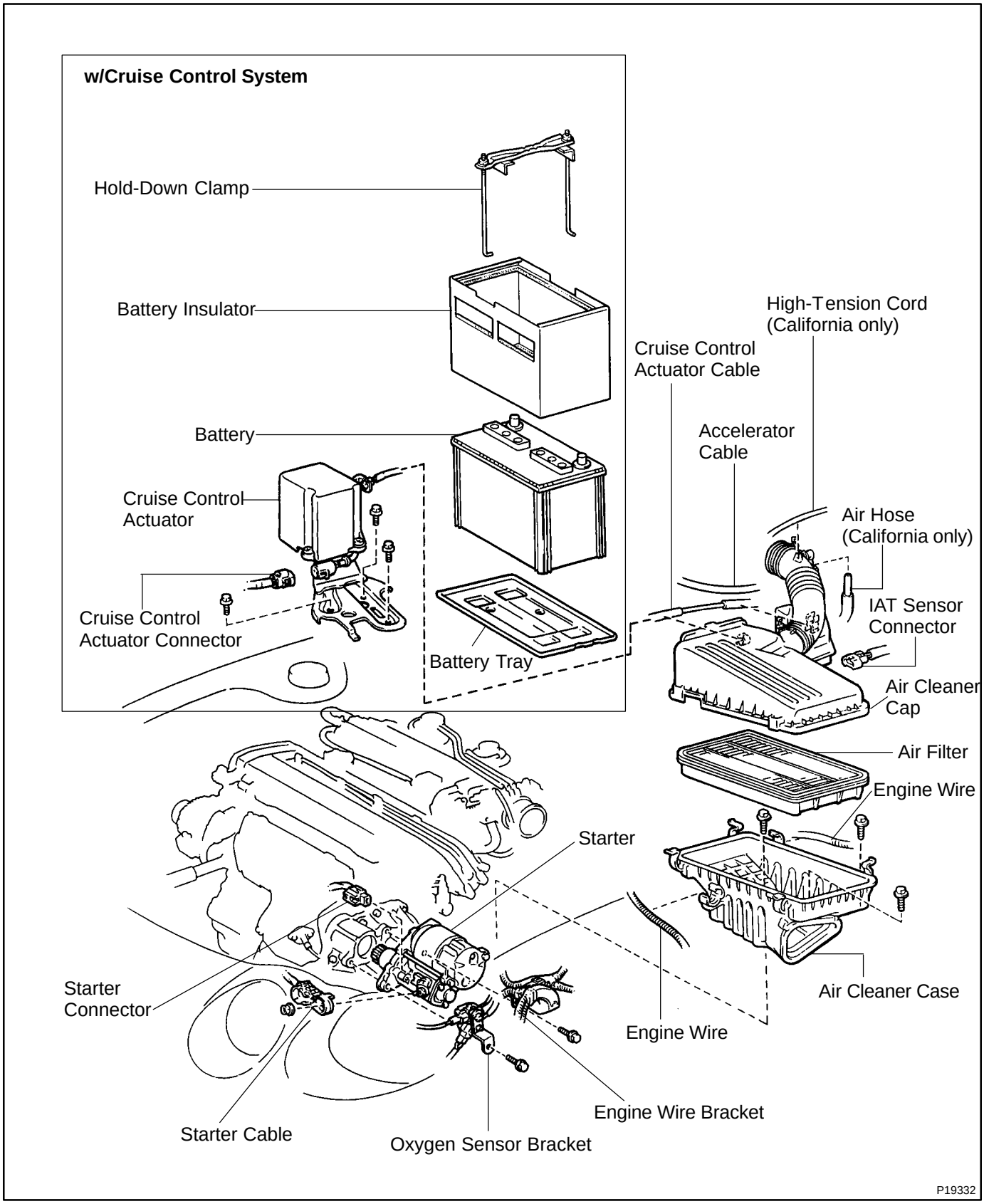

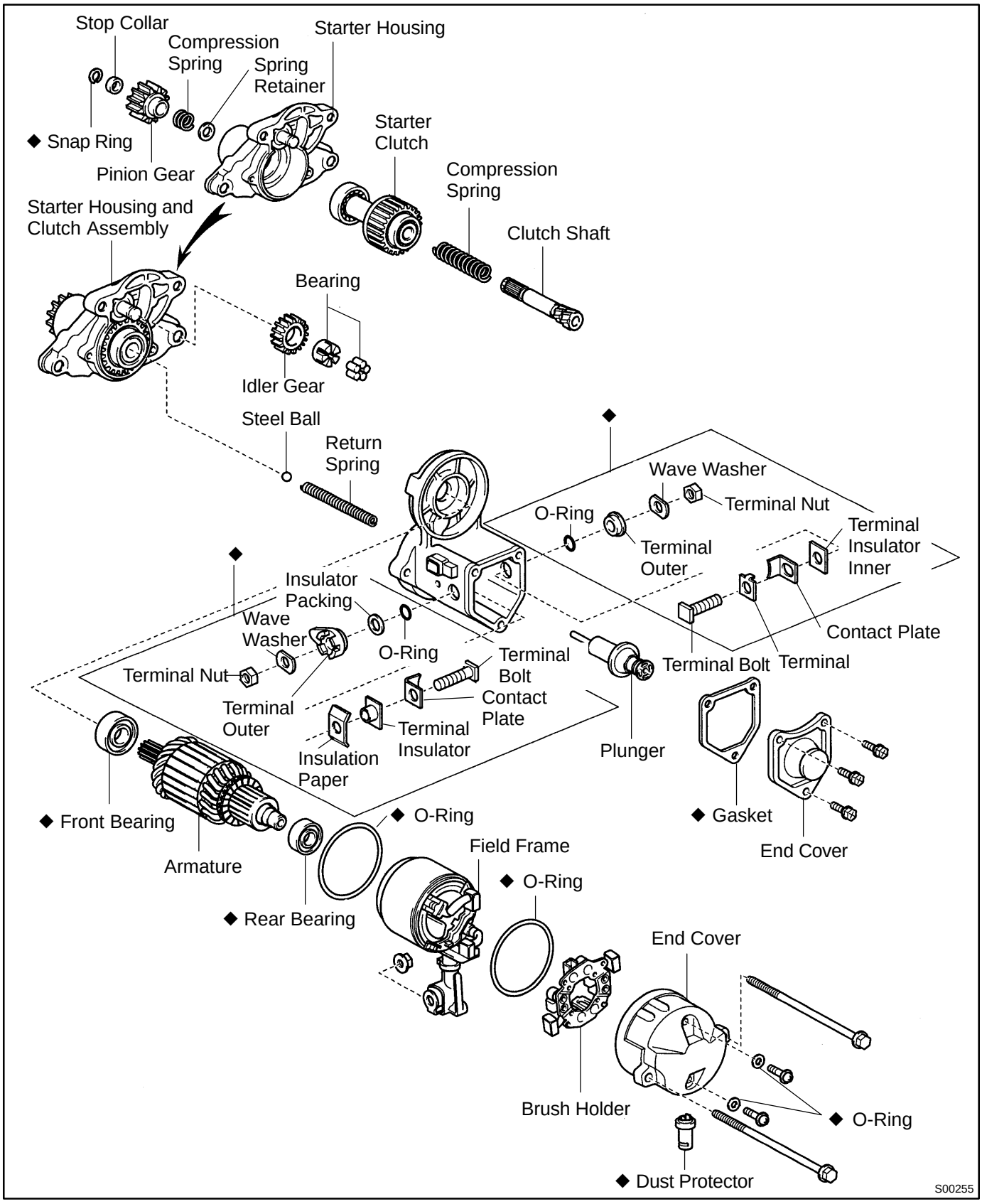
Stop Collar
Compression Spring
Spring Retainer
Starter Housing
◆ Snap Ring
Pinion Gear
Starter Clutch
Compression Spring
Clutch Shaft
Starter Housing and Clutch Assembly
Bearing
Idler Gear
Steel Ball
Return Spring
◆
Wave Washer
Terminal Nut
O-Ring
Terminal Outer
Terminal Insulator Inner
Insulator Packing
Wave Washer
O-Ring
Terminal Nut
Terminal Outer
Terminal Bolt
Contact Plate
Terminal Bolt
Terminal
Contact Plate
Terminal Insulator
Insulation Paper
Plunger
◆ Front Bearing
Armature
◆ O-Ring
◆ Rear Bearing
Field Frame
◆ O-Ring
◆ Gasket
End Cover
End Cover
Brush Holder
◆ O-Ring
◆ Dust Protector
S00255

THERMAL VACUUM VALVE (TVV)

COMPONENTS

EC0K2-01

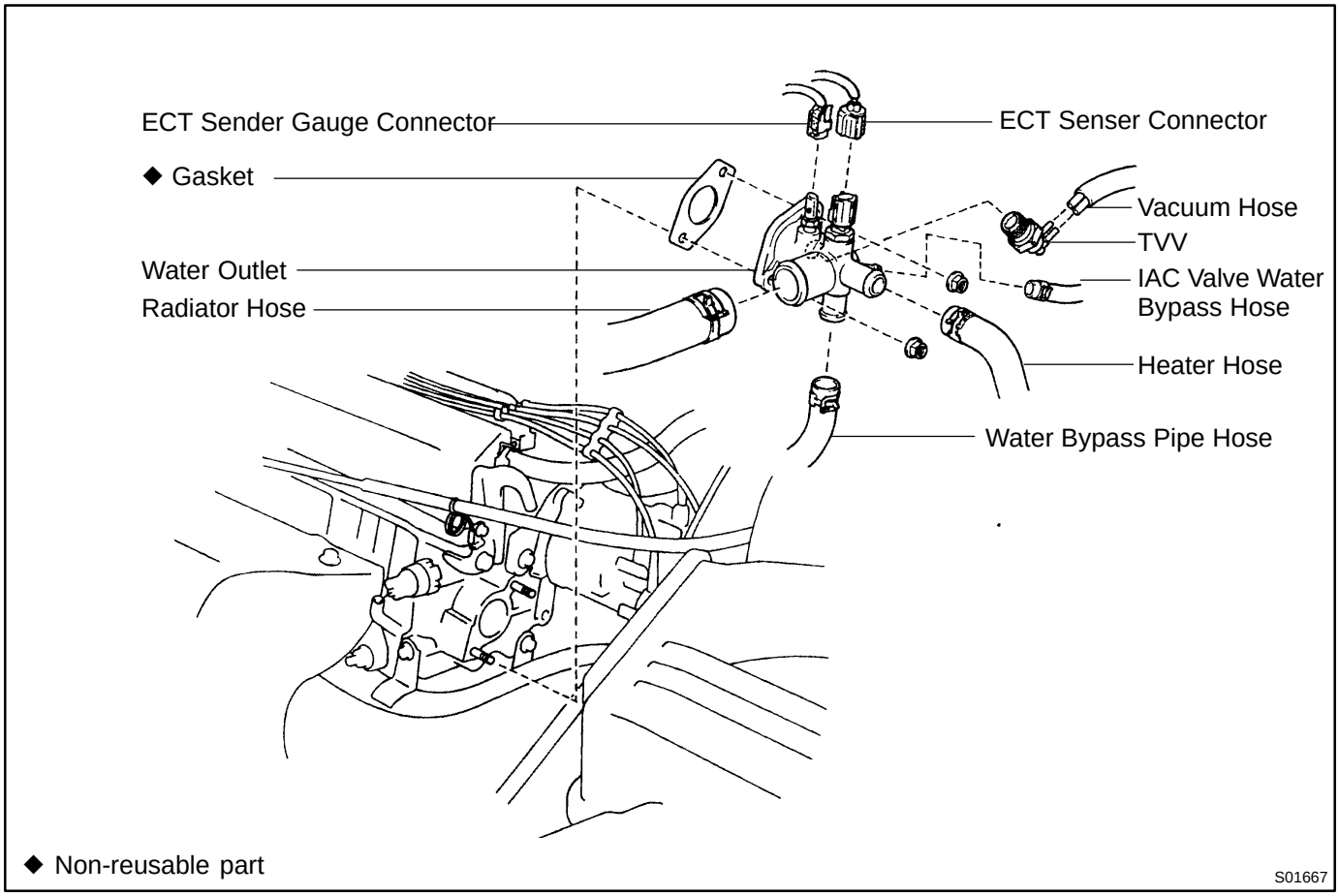

SF0VD-02

COMPONENTS

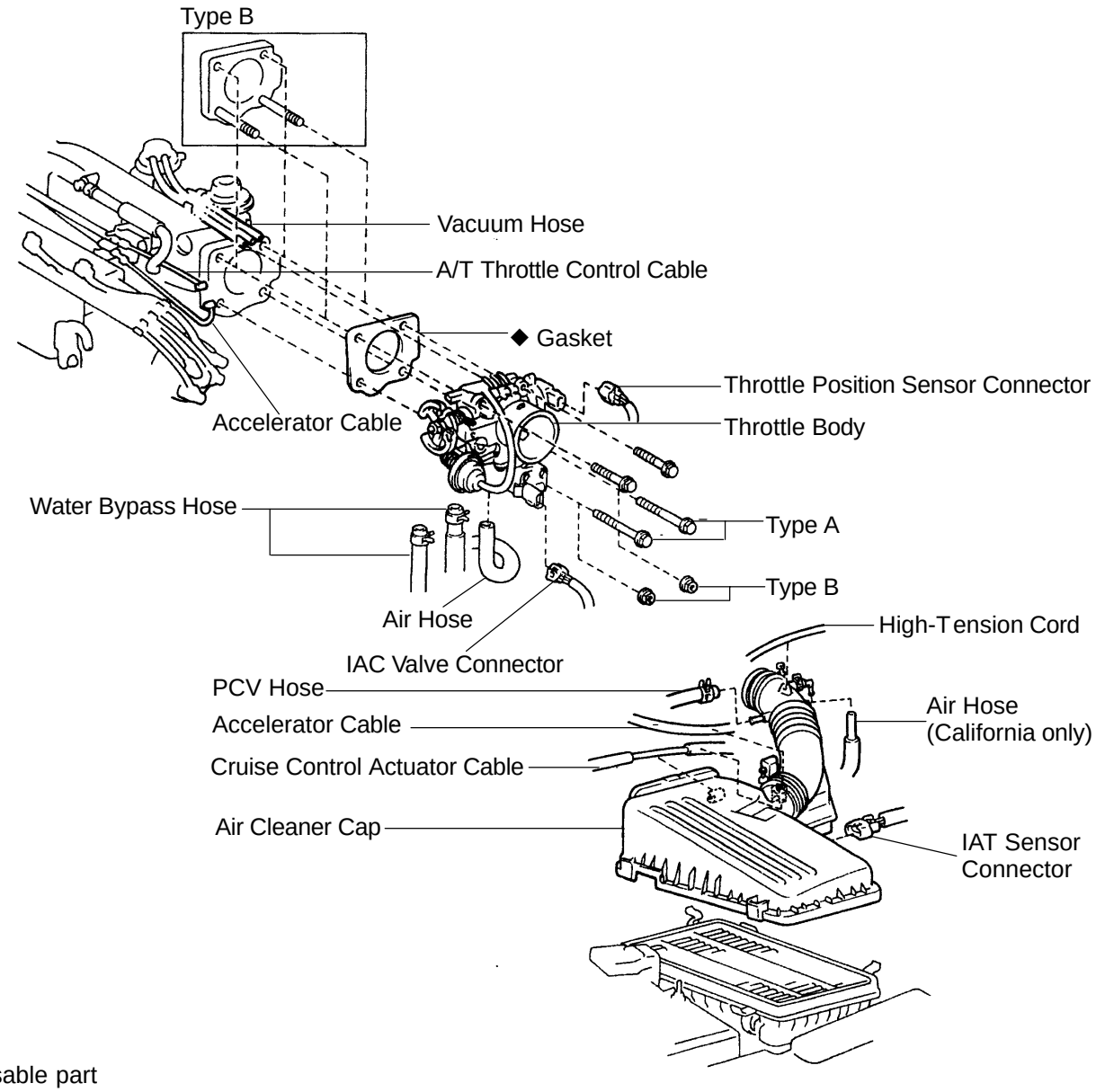

◆ Non-reusable part

S01727

WATER PUMP

COMPONENTS

CO0G9-03

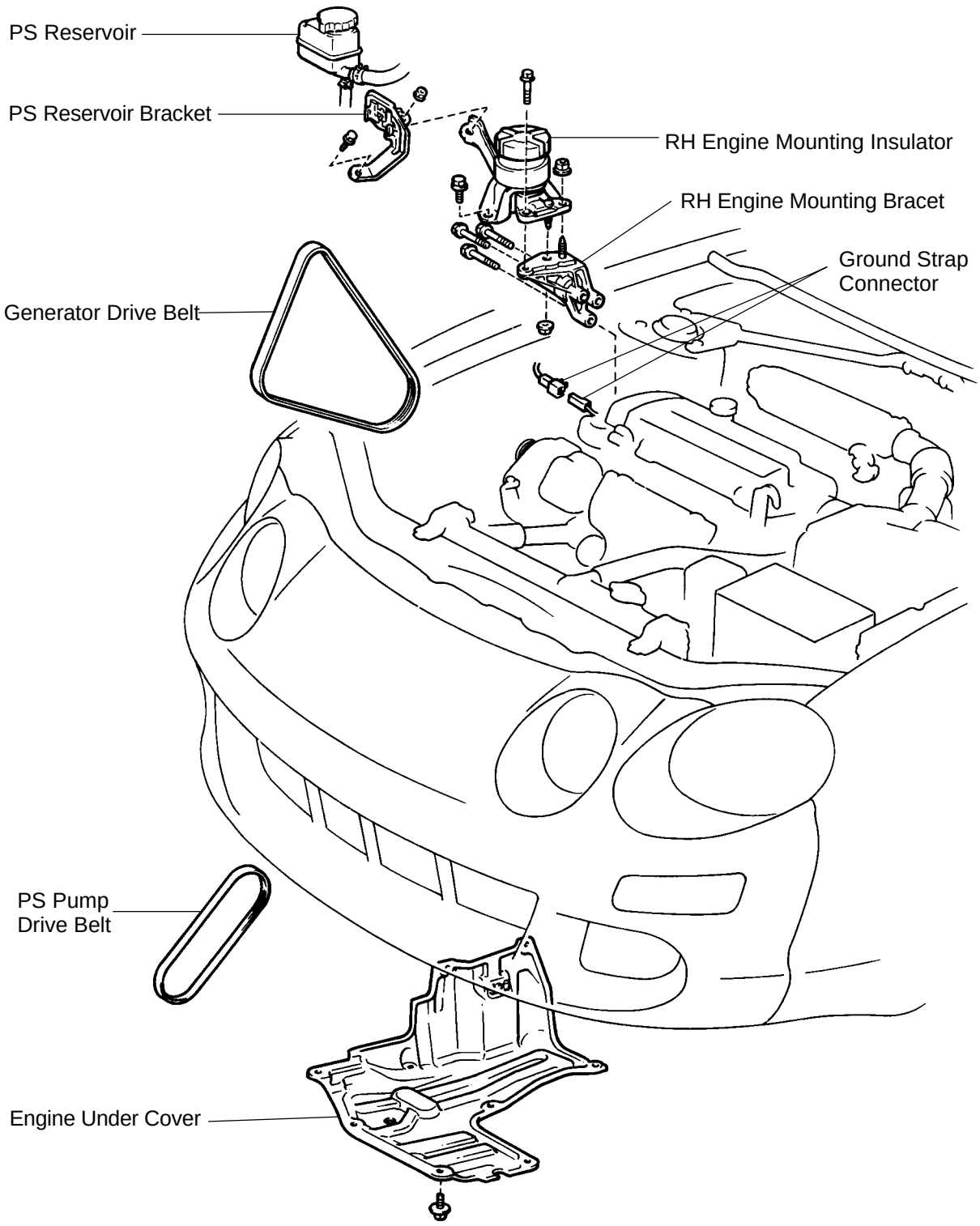

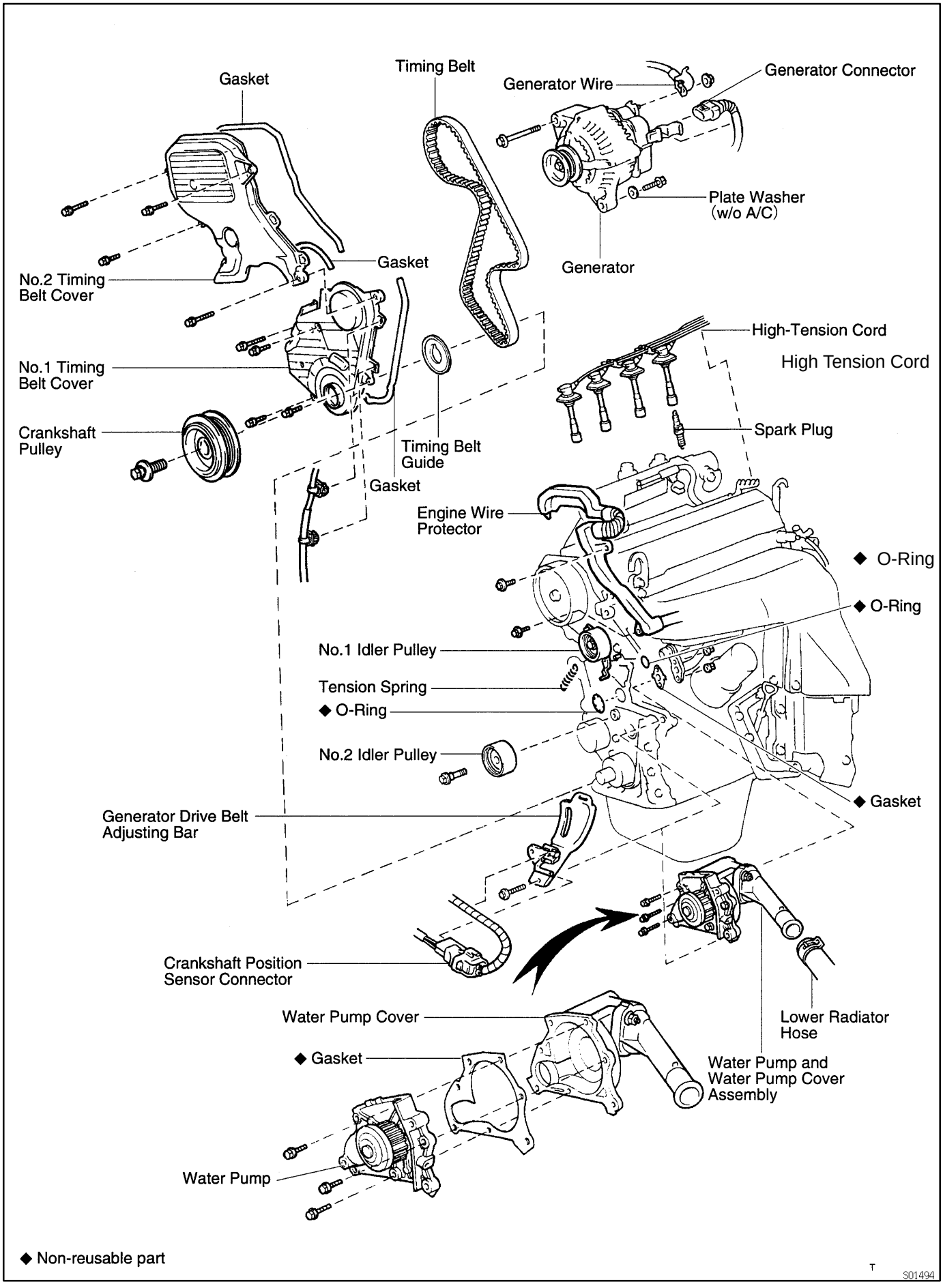
Gasket
Timing Belt
Generator Wire
Generator Connector
Plate Washer
(w/o A/C)
Generator
No.2 Timing
Belt Cover
Gasket
No.1 Timing
Belt Cover
Crankshaft
Pulley
Timing Belt
Guide
Gasket
High-Tension Cord
High Tension Cord
Spark Plug
Engine Wire
Protector
◆ O-Ring
◆ O-Ring
No.1 Idler Pulley
Tension Spring
◆ O-Ring
No.2 Idler Pulley
◆ Gasket
Generator Drive Belt
Adjusting Bar
Crankshaft Position
Sensor Connector
Water Pump Cover
◆ Gasket
Water Pump
Lower Radiator
Hose
Water Pump and
Water Pump Cover
Assembly
◆ Non-reusable part
S01494

CIRCUIT OPENING RELAY

COMPONENTS

SF0VN-03

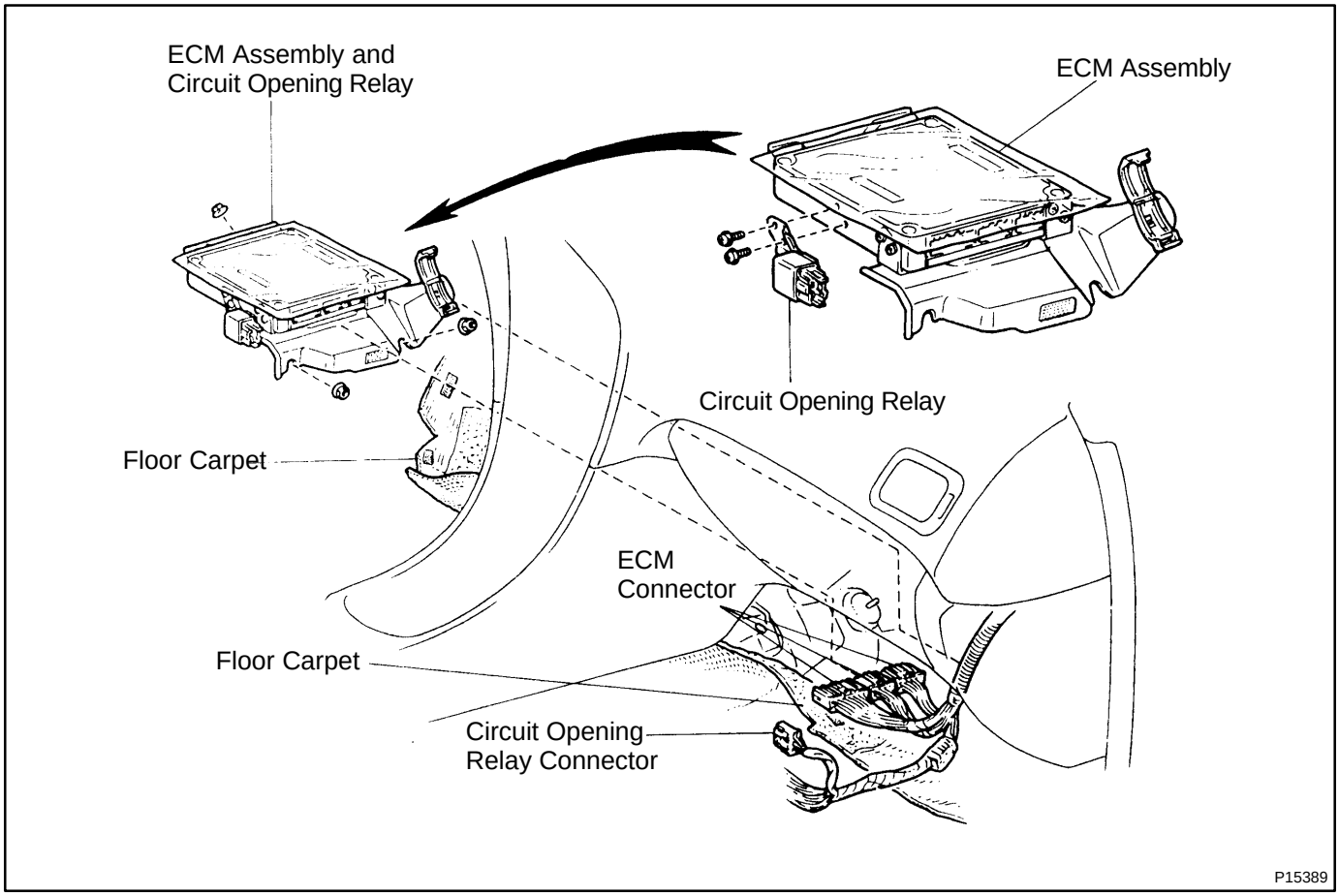

CYLINDER BLOCK

COMPONENTS

EM1CB-01

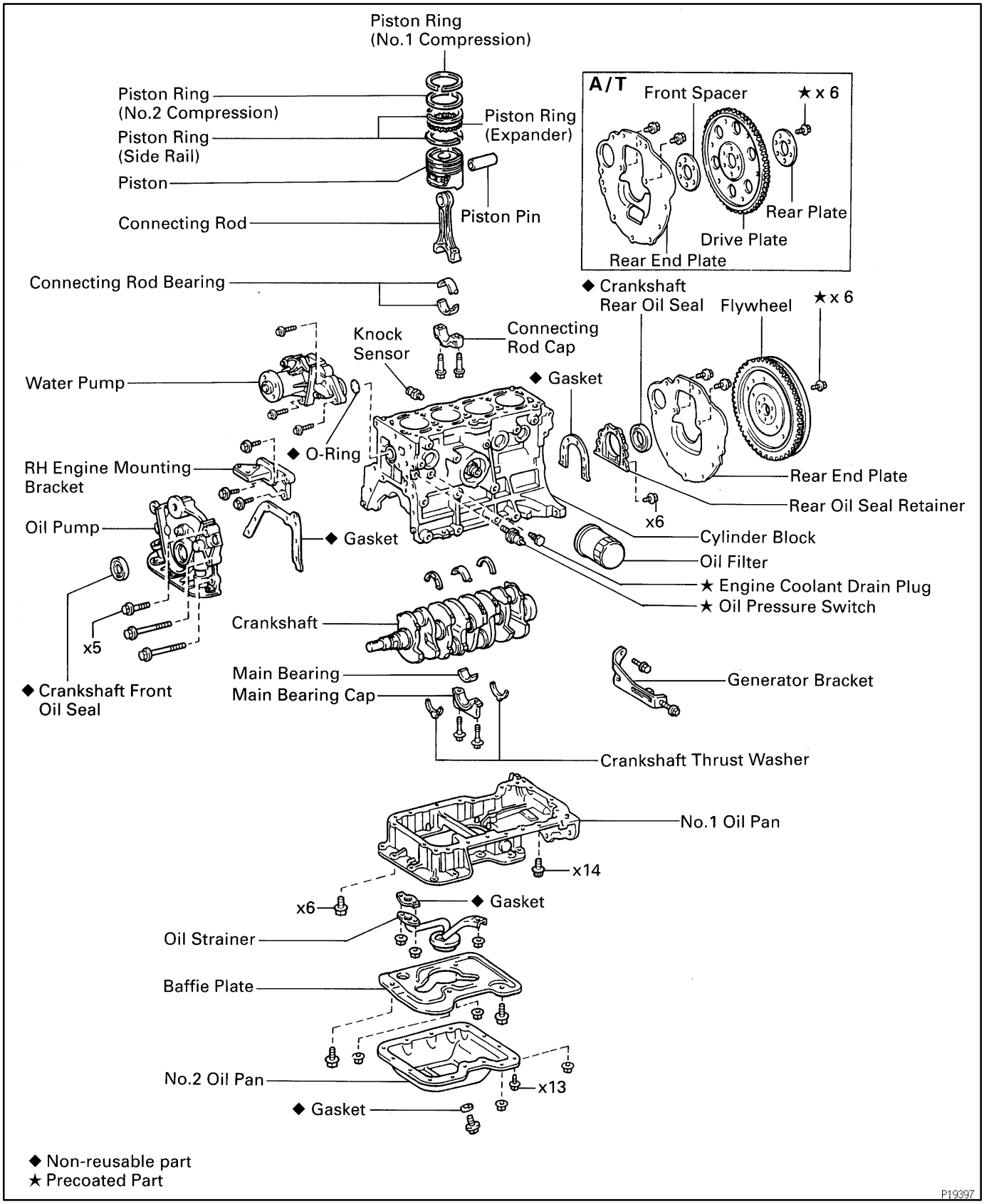

CYLINDER HEAD

COMPONENTS

EM1C1-01

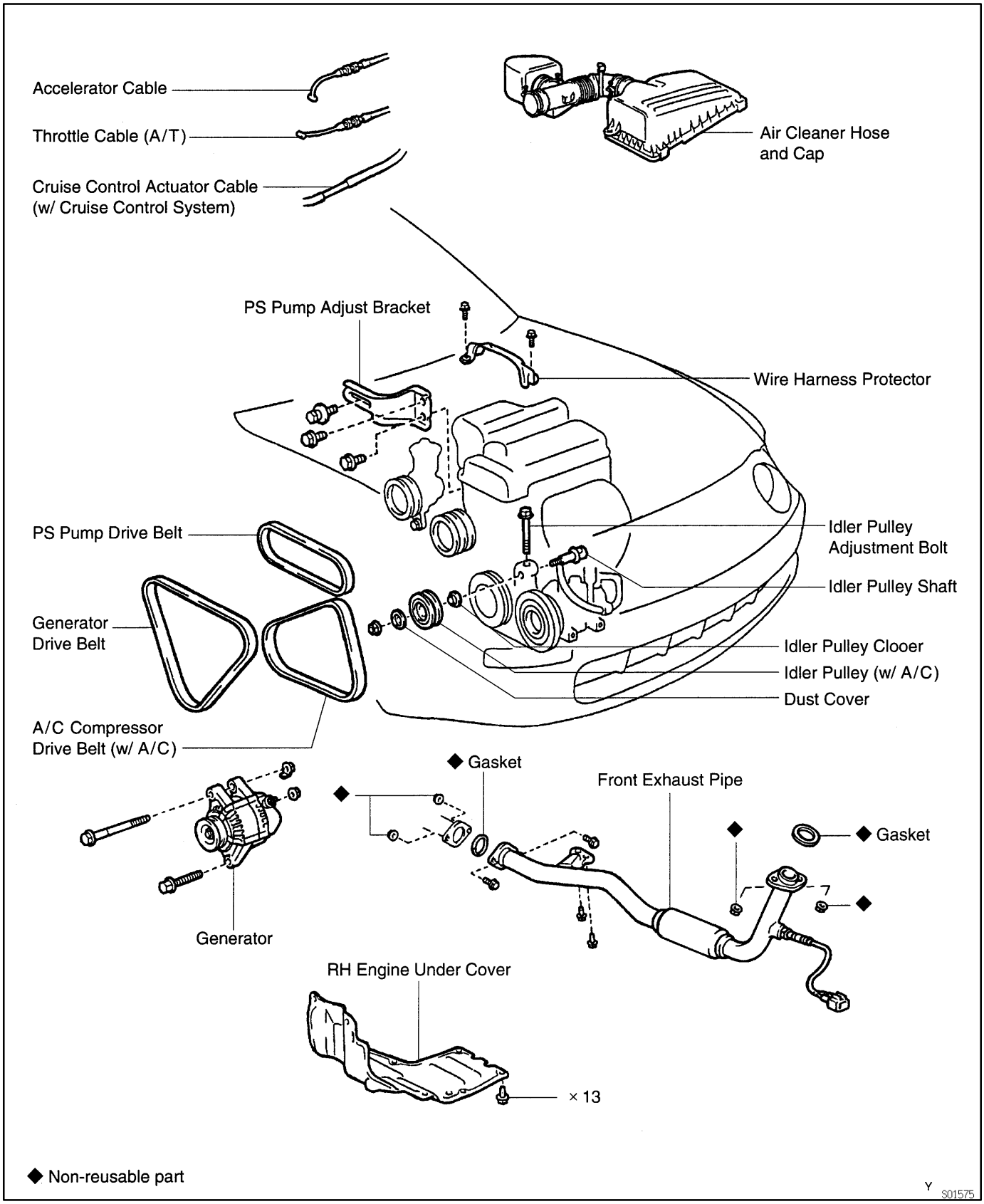

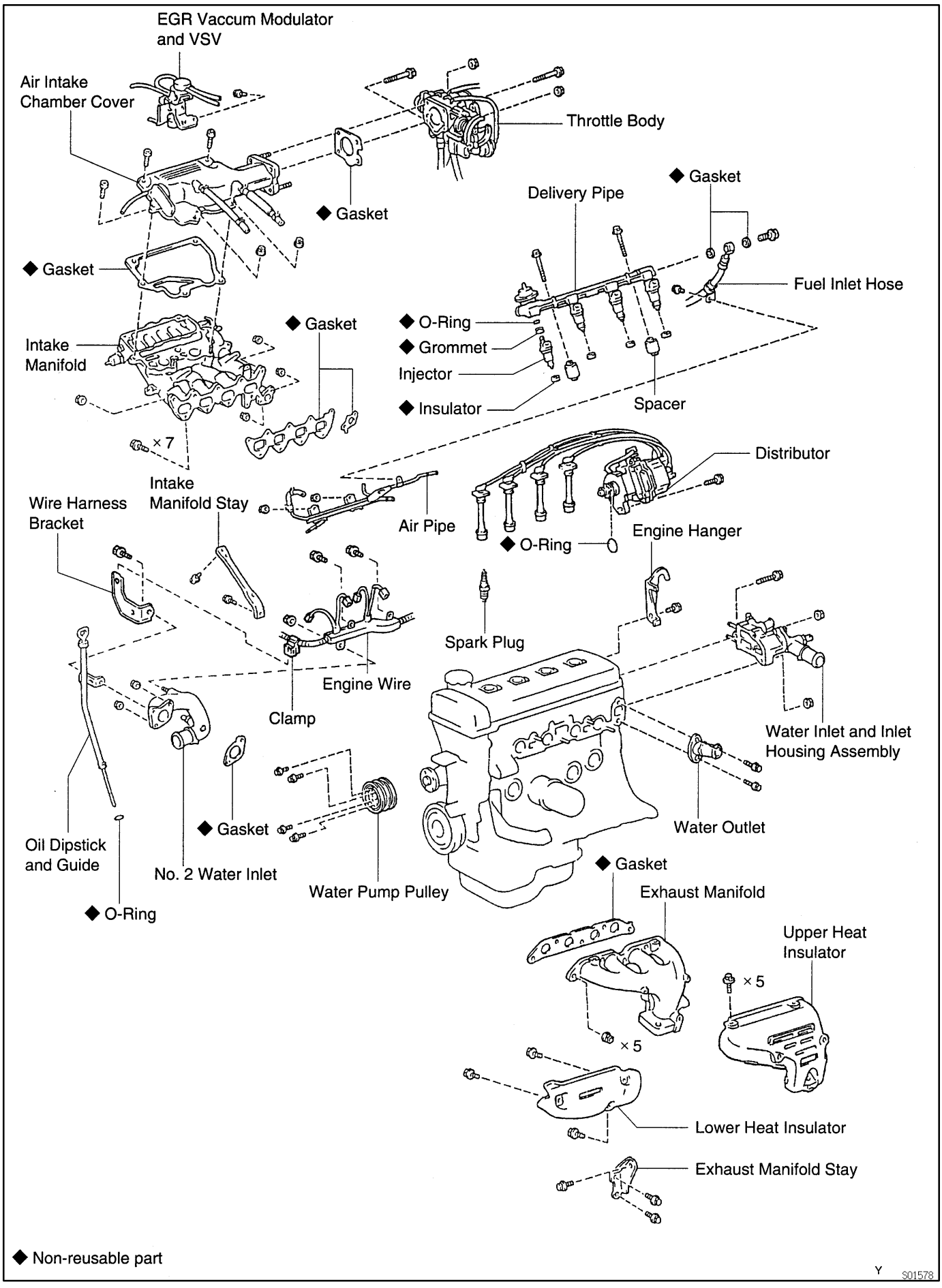
EGR Vaccum Modulator and VSV
Air Intake Chamber Cover
Throttle Body
◆ Gasket
◆ Gasket
Delivery Pipe
◆ Gasket
Fuel Inlet Hose
◆ Gasket
Intake Manifold
◆ Gasket
◆ O-Ring
◆ Grommet
Injector
◆ Insulator
Spacer
× 7
Distributor
Intake Manifold Stay
Wire Harness Bracket
Air Pipe
◆ O-Ring
Engine Hanger
Spark Plug
Engine Wire
Clamp
Water Inlet and Inlet Housing Assembly
Water Outlet
Oil Dipstick and Guide
◆ Gasket
No. 2 Water Inlet
Water Pump Pulley
◆ Gasket
Exhaust Manifold
Upper Heat Insulator
× 5
◆ O-Ring
× 5
Lower Heat Insulator
Exhaust Manifold Stay
◆ Non-reusable part
Y
S01578

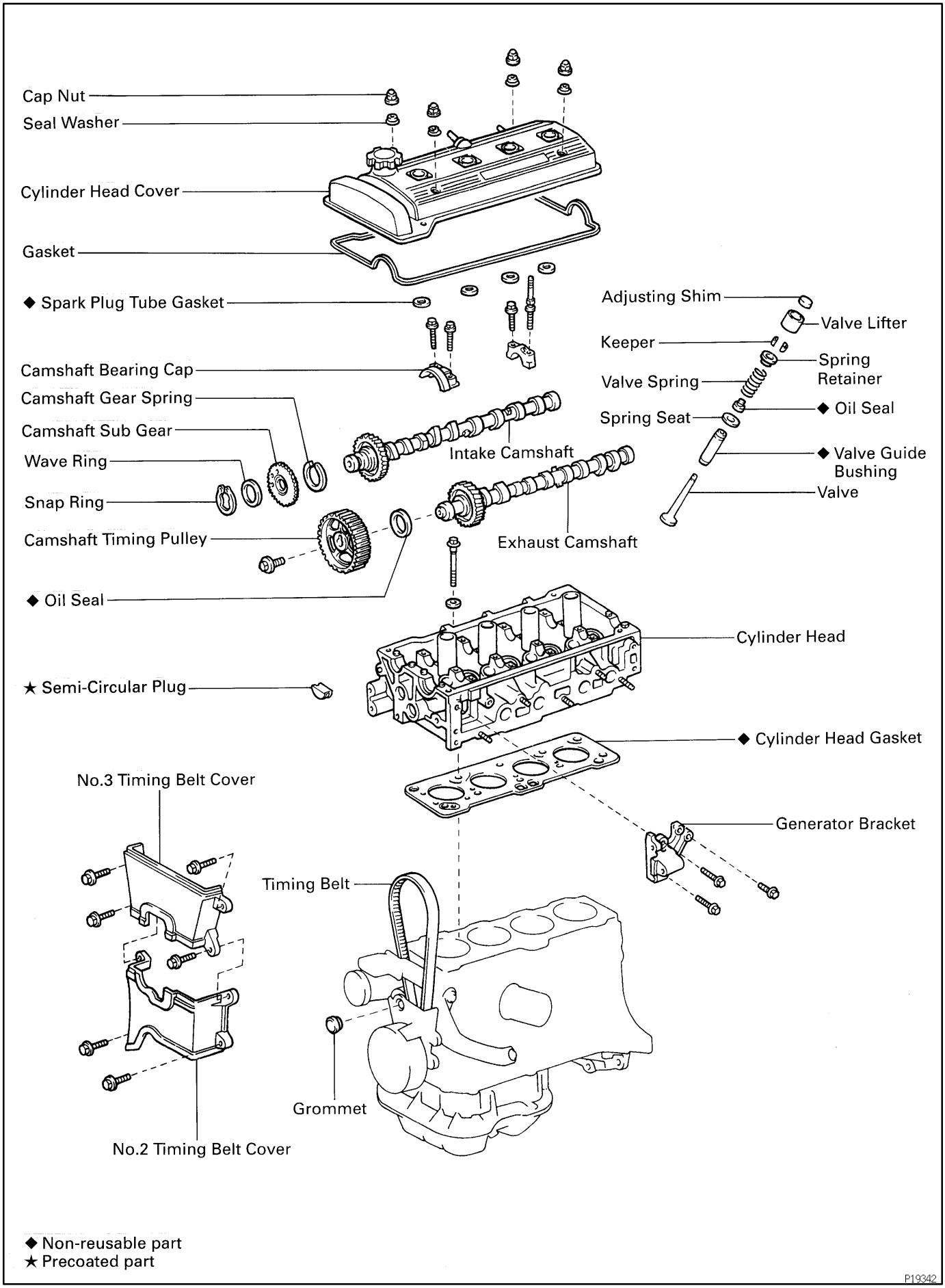
Cap Nut
Seal Washer
Cylinder Head Cover
Gasket
◆ Spark Plug Tube Gasket
Camshaft Bearing Cap
Camshaft Gear Spring
Camshaft Sub Gear
Wave Ring
Snap Ring
Camshaft Timing Pulley
◆ Oil Seal
Intake Camshaft
Exhaust Camshaft
Adjusting Shim
Valve Lifter
Keeper
Spring Retainer
Valve Spring
Spring Seat
◆ Oil Seal
◆ Valve Guide Bushing
Valve
Cylinder Head
★ Semi-Circular Plug
◆ Cylinder Head Gasket
Generator Bracket
No.3 Timing Belt Cover
Timing Belt
Grommet
No.2 Timing Belt Cover
◆ Non-reusable part
★ Precoated part
P19342

DISTRIBUTOR

COMPONENTS

IG0GM-01

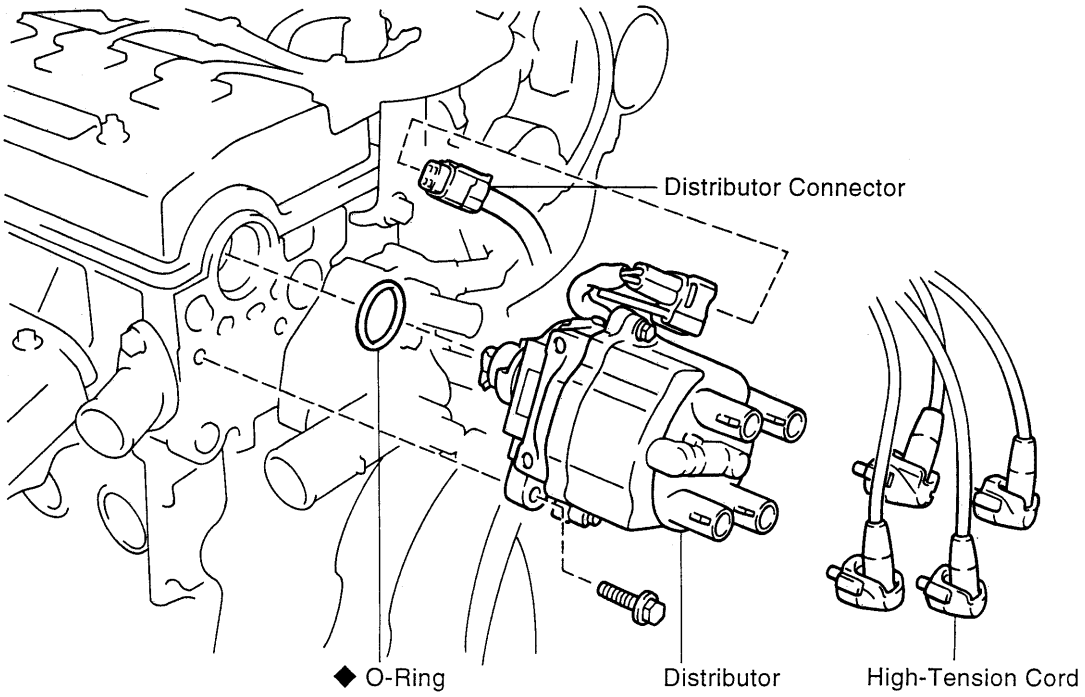

◆ Non-reusable part

P19423

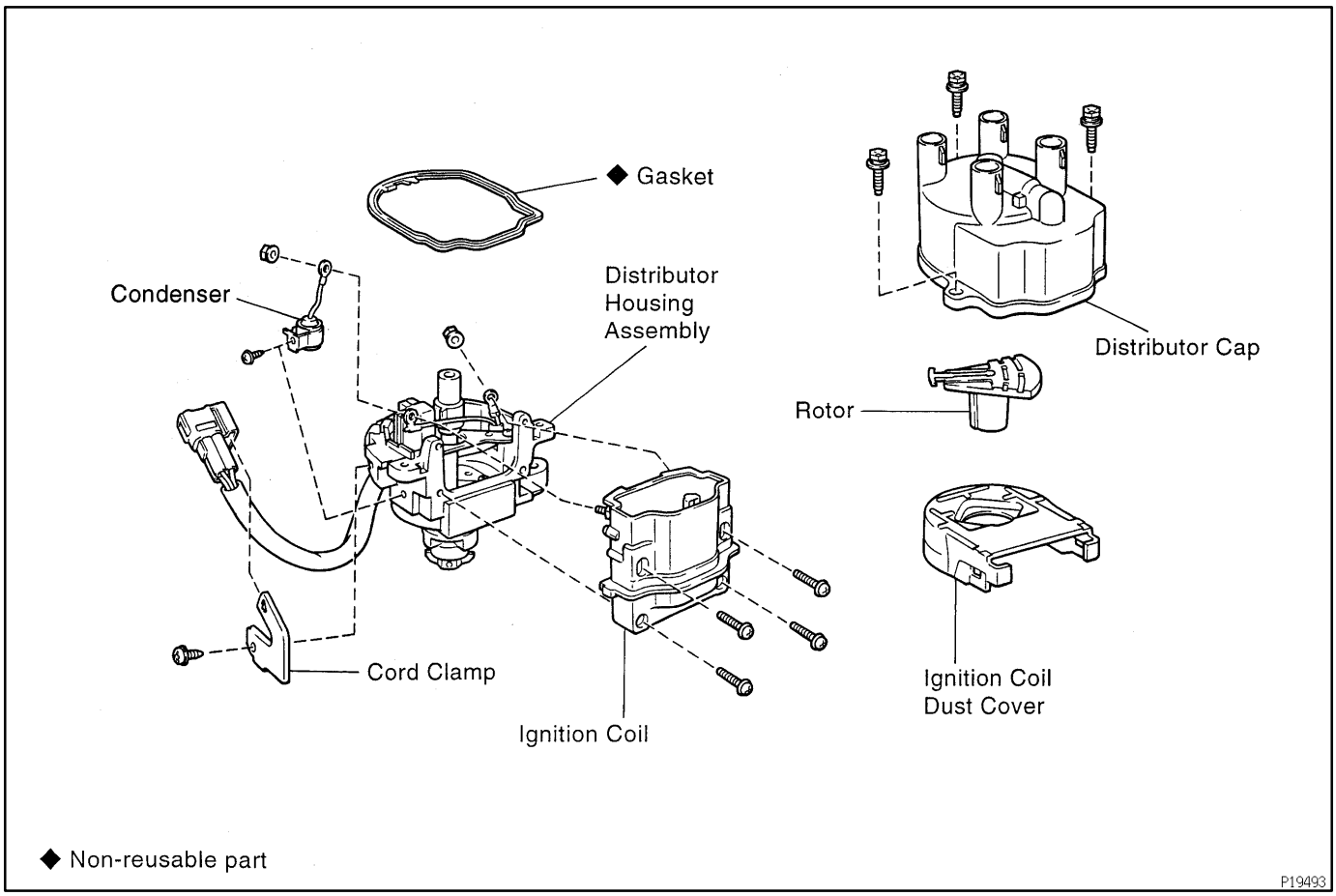
◆ Gasket
Condenser
Distributor
Housing
Assembly
Distributor Cap
Rotor
Cord Clamp
Ignition Coil
Ignition Coil
Dust Cover
◆ Non-reusable part
P19493

CO0ZO-01

COMPONENTS

No.1 Cooling Fan:

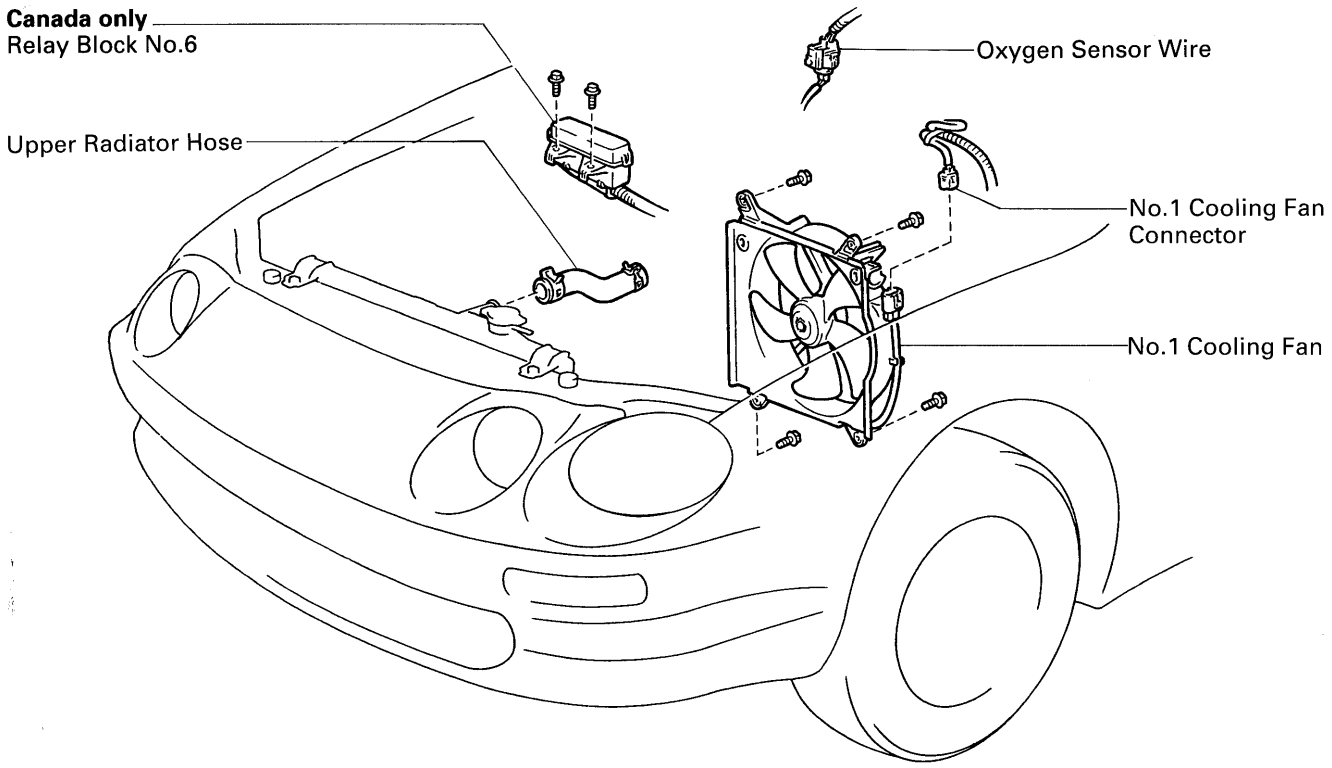

P19395

No.1 Cooling Fan:

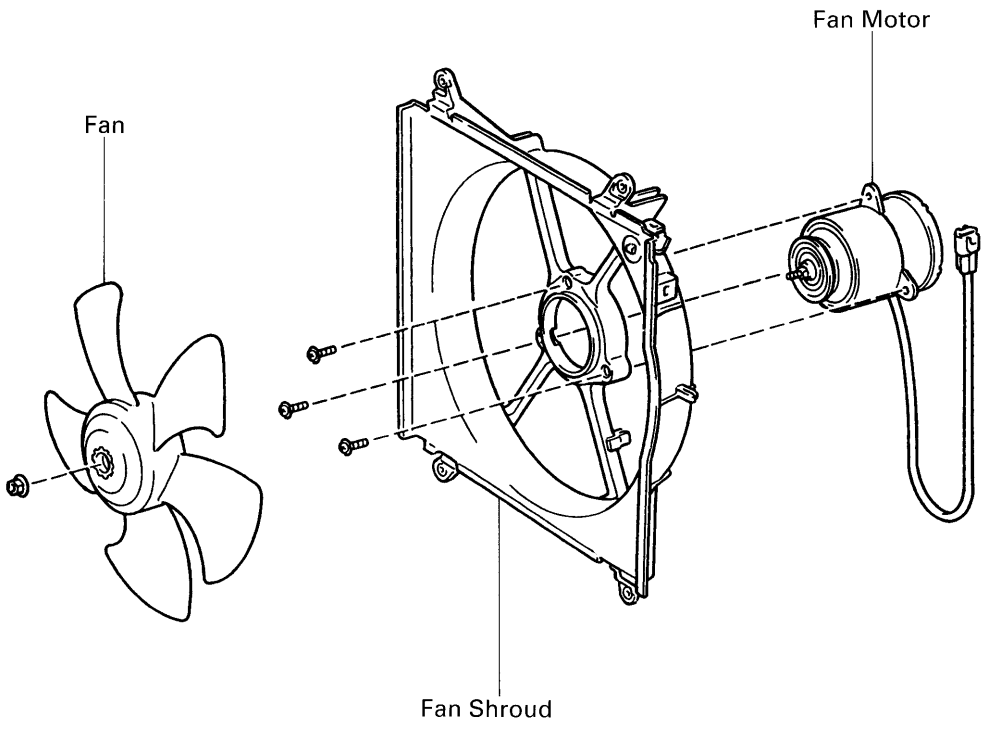

1996 CELICA (RM443U)

P19396

No.2 Cooling Fan:

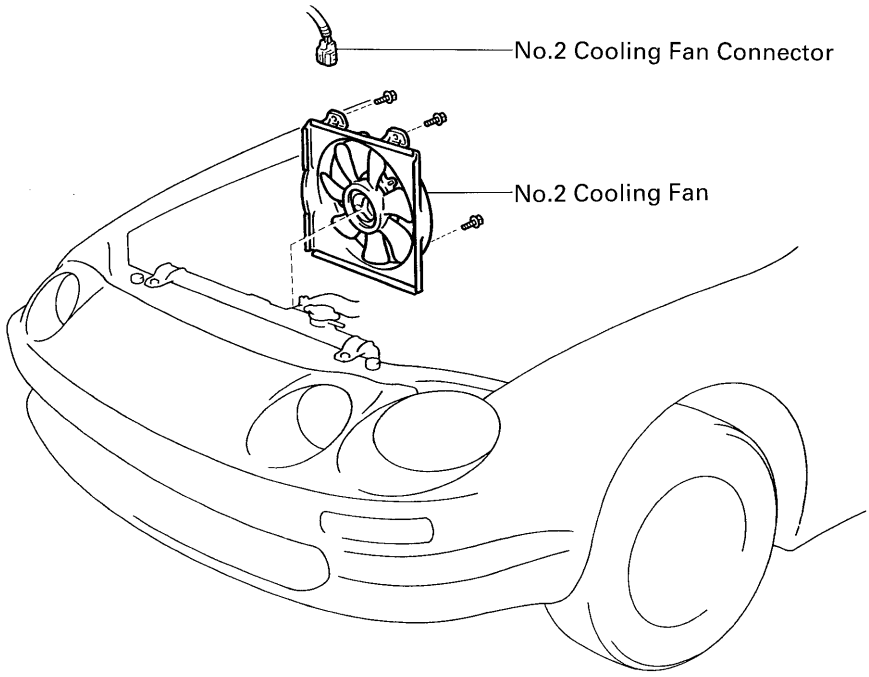

P19402

No.2 Cooling Fan:

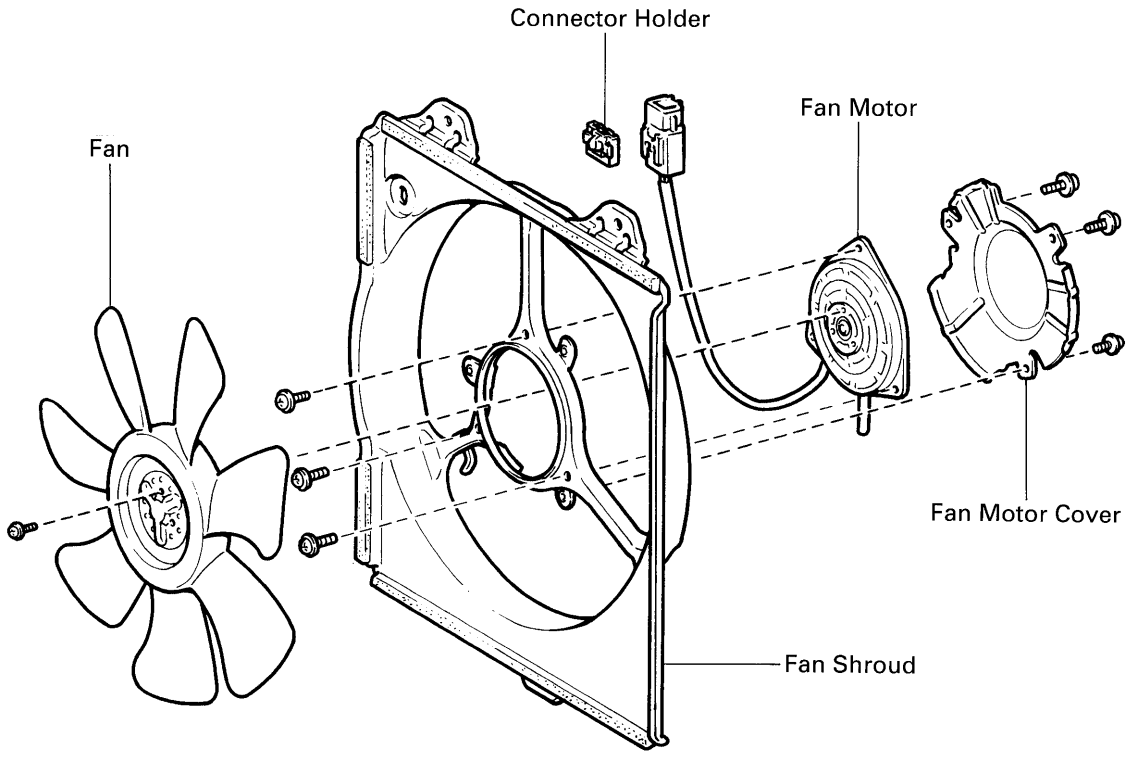

1996 CELICA (RM443U)

P19363

ENGINE CONTROL MODULE (ECM)

SF0W3-03

COMPONENTS

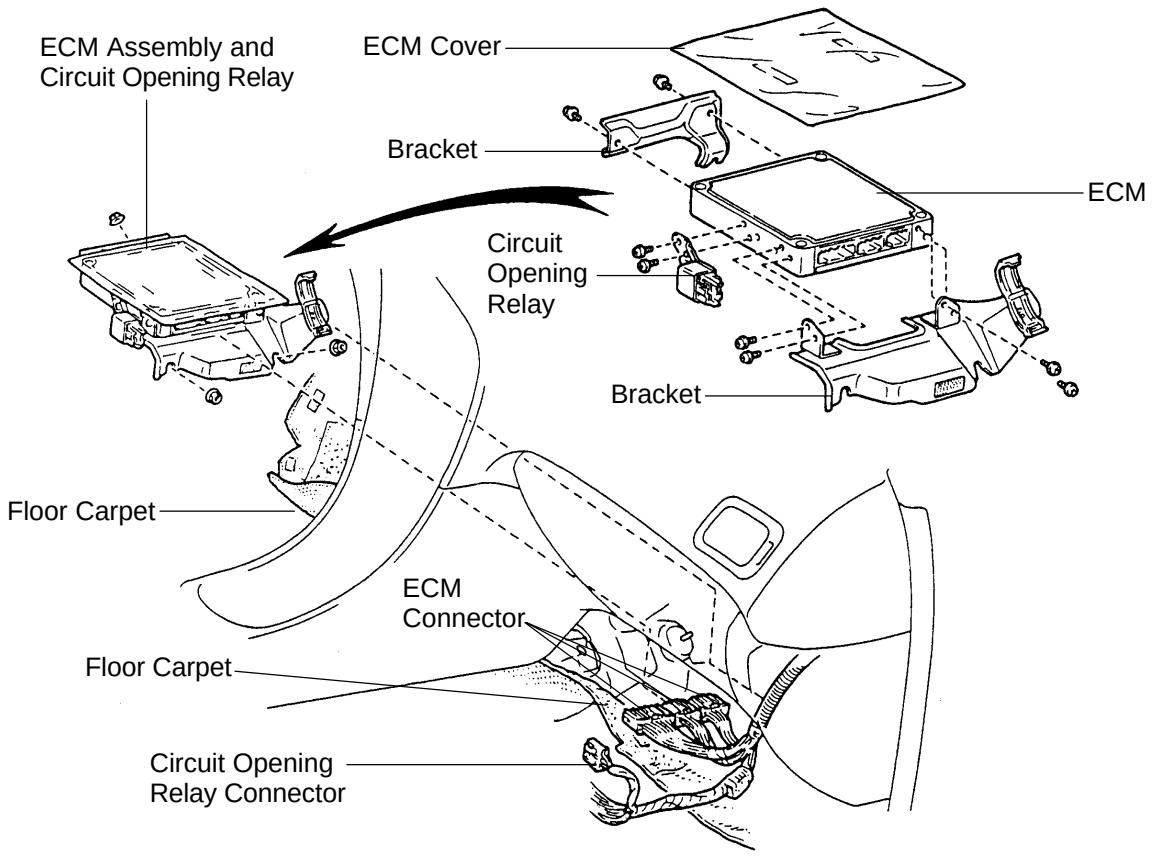

N

Z17198

ENGINE UNIT

COMPONENTS

EM1C8-01

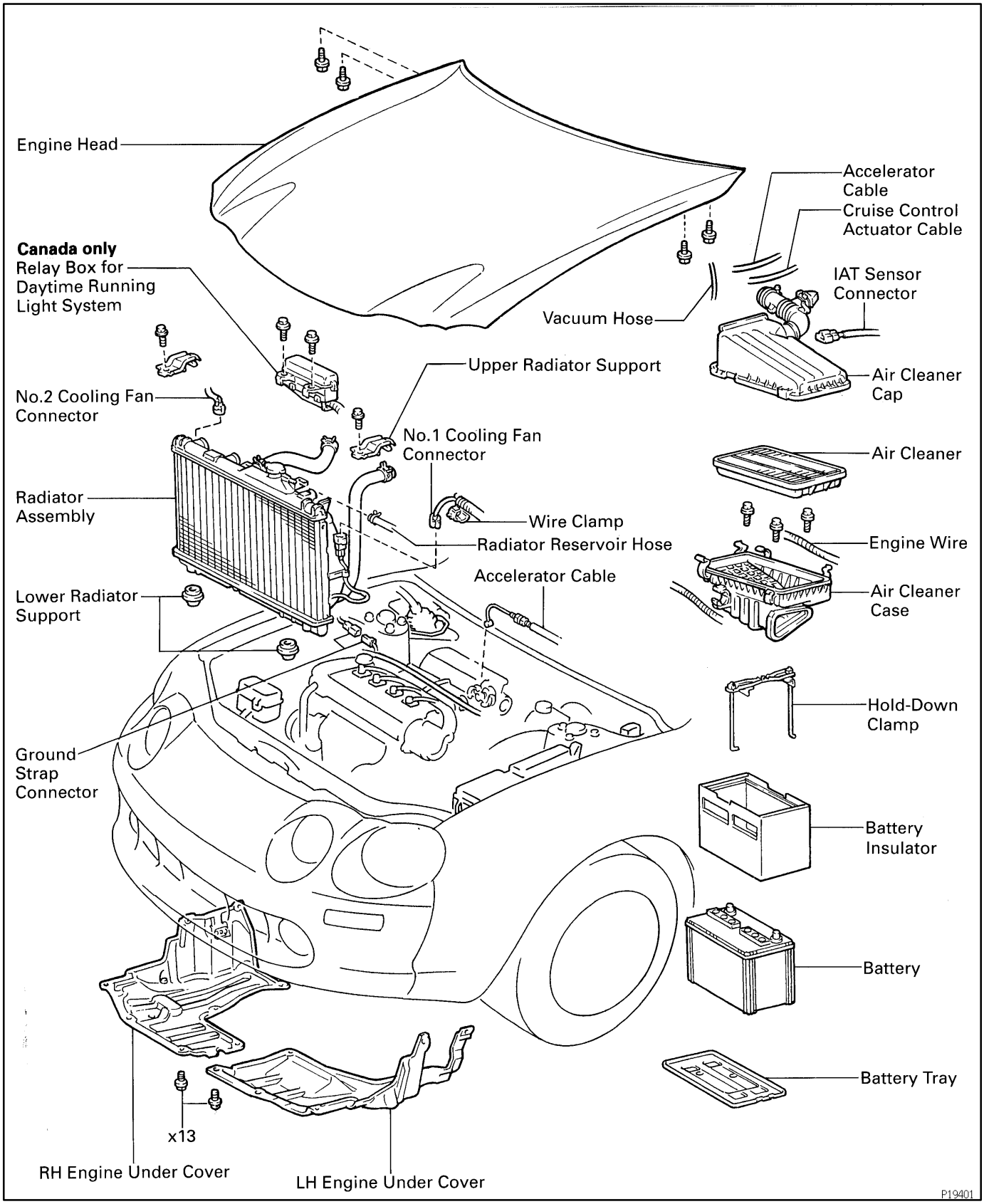

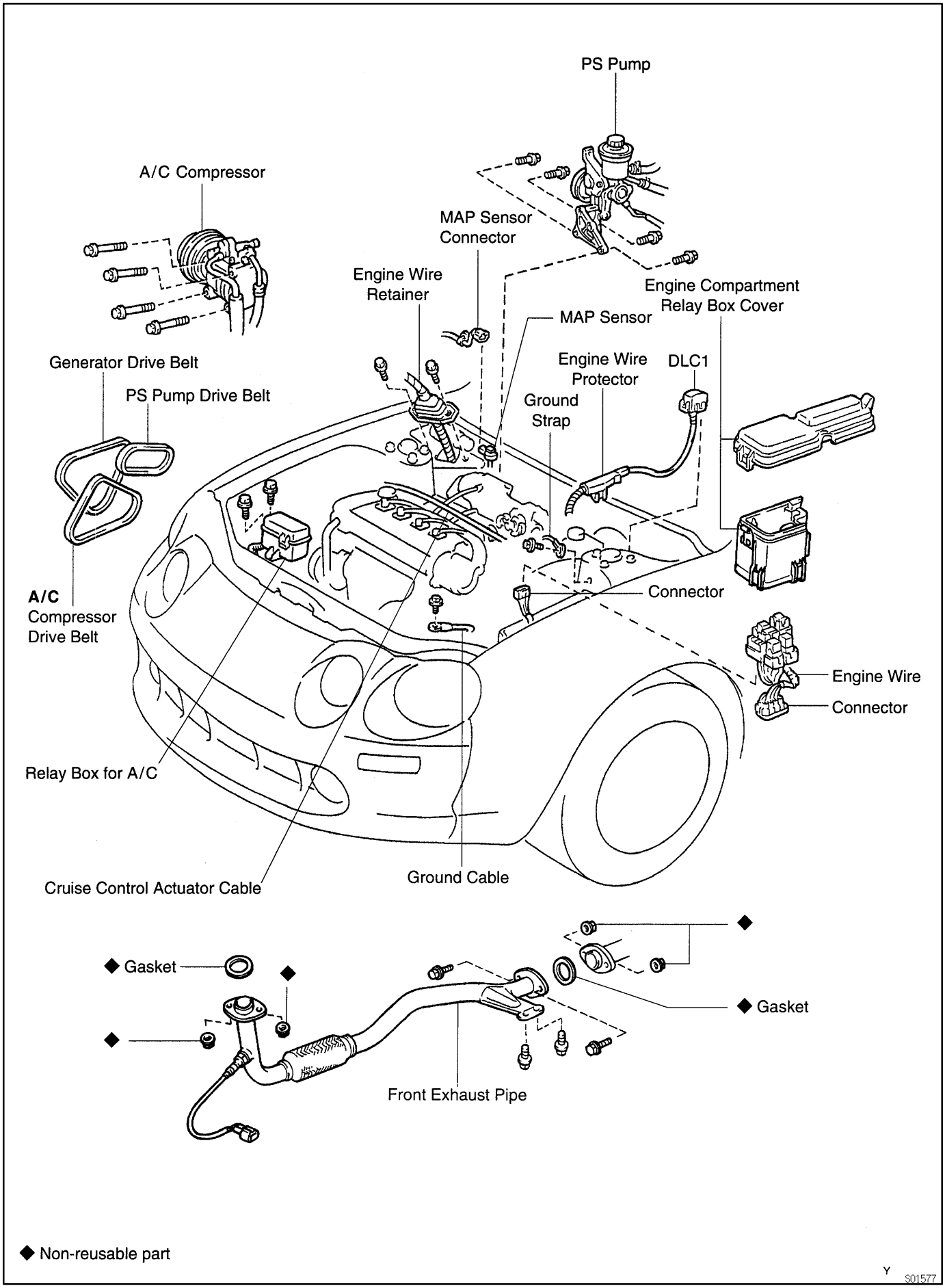
PS Pump
A/C Compressor
MAP Sensor Connector
Engine Wire Retainer
Engine Compartment Relay Box Cover
MAP Sensor
Generator Drive Belt
PS Pump Drive Belt
Engine Wire Protector
DLC1
Ground Strap
A/C Compressor Drive Belt
Connector
Engine Wire
Connector
Relay Box for A/C
Cruise Control Actuator Cable
Ground Cable
◆ Gasket
◆ Gasket
Front Exhaust Pipe
◆ Non-reusable part
Y
S01577

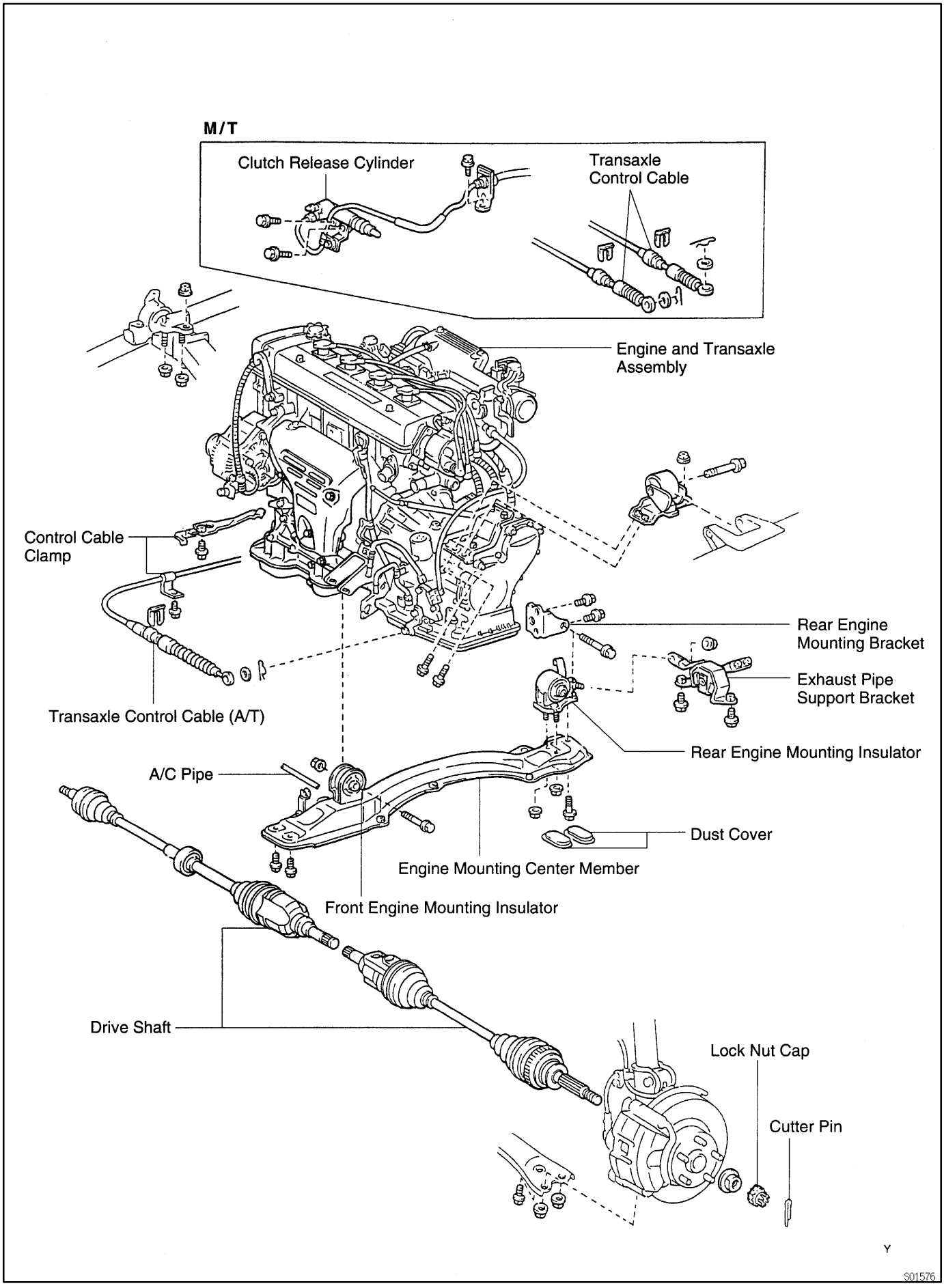
M/T
Clutch Release Cylinder
Transaxle Control Cable
Engine and Transaxle Assembly
Control Cable Clamp
Transaxle Control Cable (A/T)
Rear Engine Mounting Bracket
Exhaust Pipe Support Bracket
Rear Engine Mounting Insulator
A/C Pipe
Dust Cover
Engine Mounting Center Member
Front Engine Mounting Insulator
Drive Shaft
Lock Nut Cap
Cutter Pin
Y
S01576

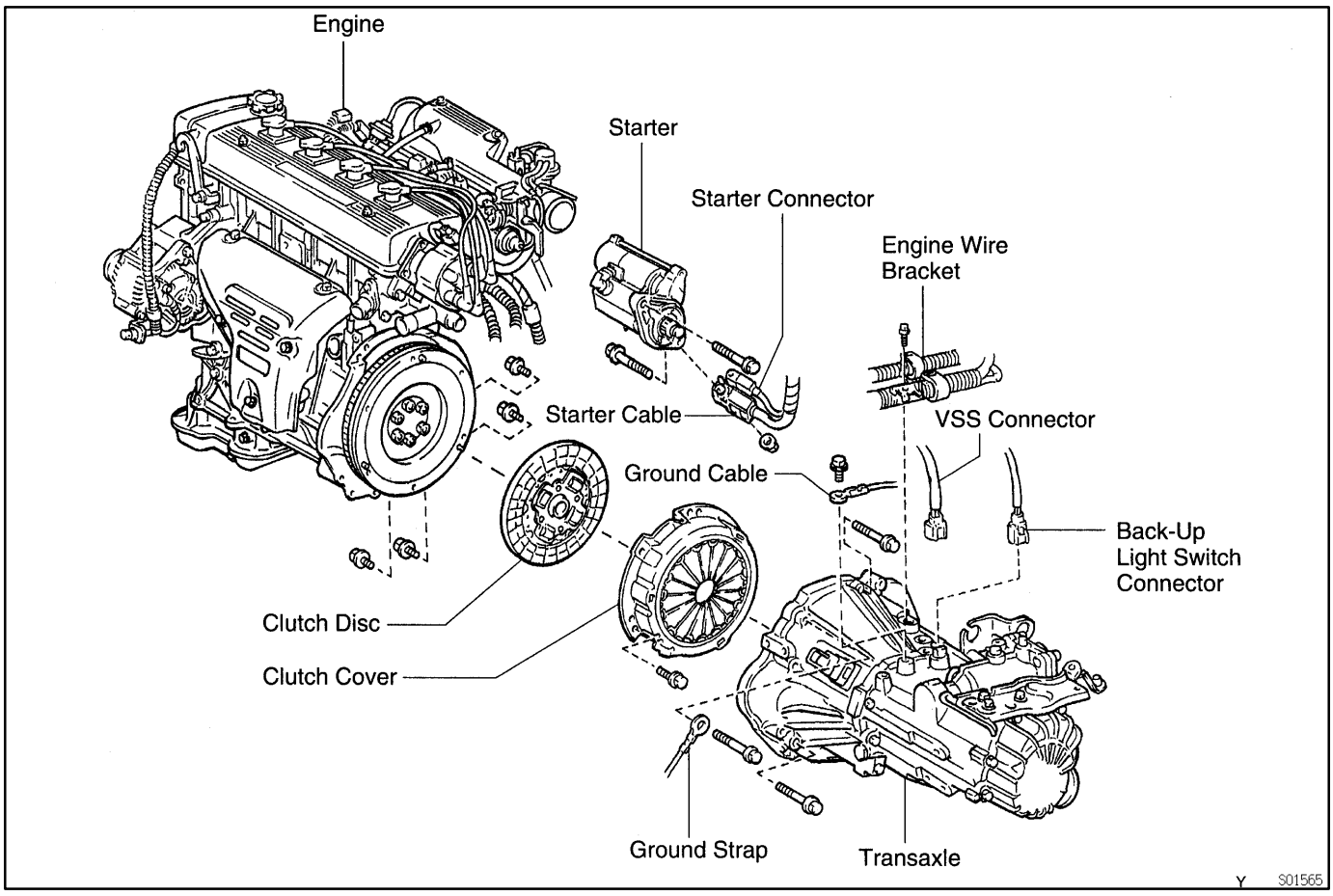
Engine
Starter
Starter Connector
Engine Wire Bracket
Starter Cable
VSS Connector
Ground Cable
Back-Up Light Switch Connector
Clutch Disc
Clutch Cover
Ground Strap
Transaxle
Y
S01565

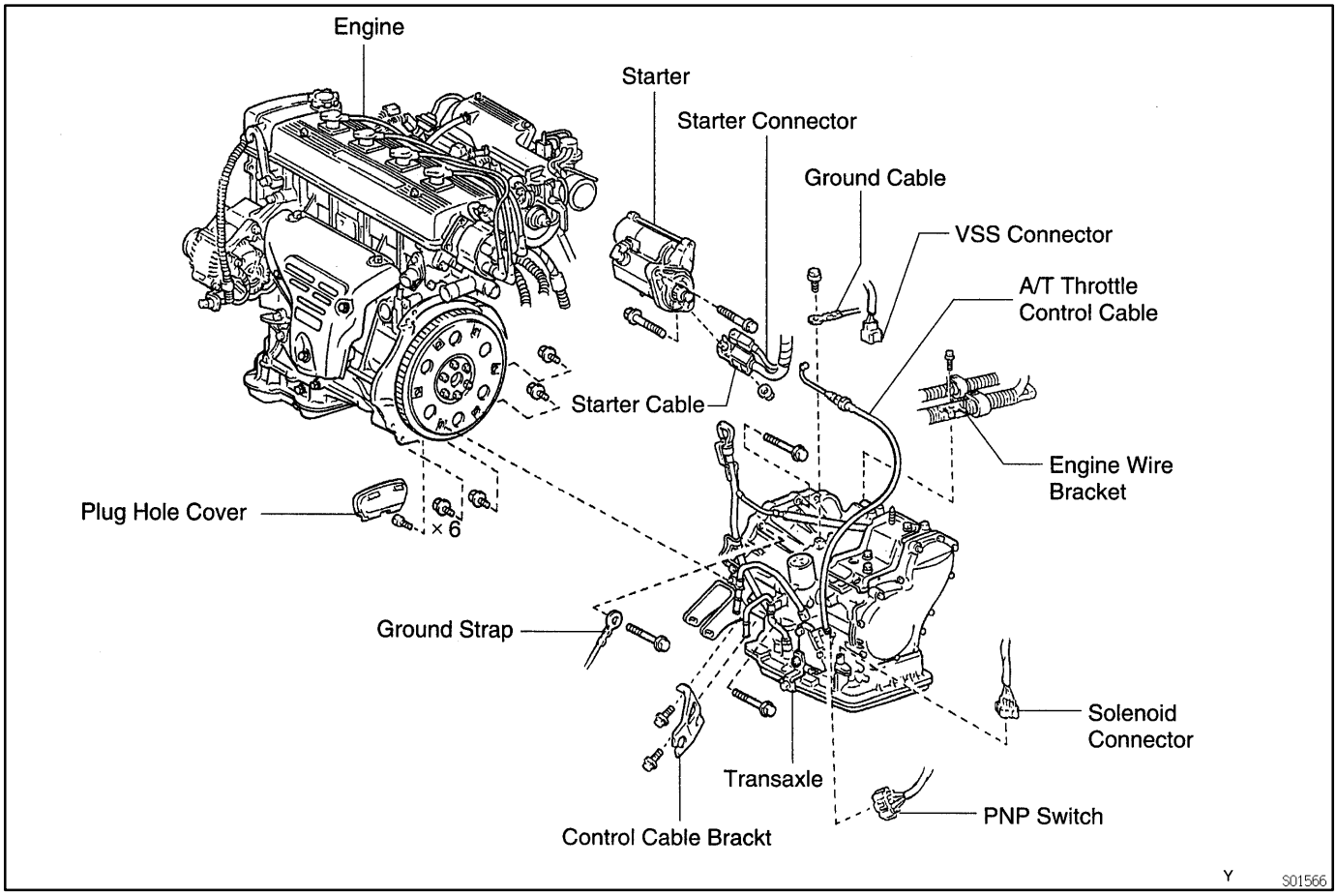
Engine
Starter
Starter Connector
Ground Cable
VSS Connector
A/T Throttle Control Cable
Starter Cable
Engine Wire Bracket
Plug Hole Cover
× 6
Ground Strap
Solenoid Connector
Transaxle
PNP Switch
Control Cable Brackt
Y
S01566

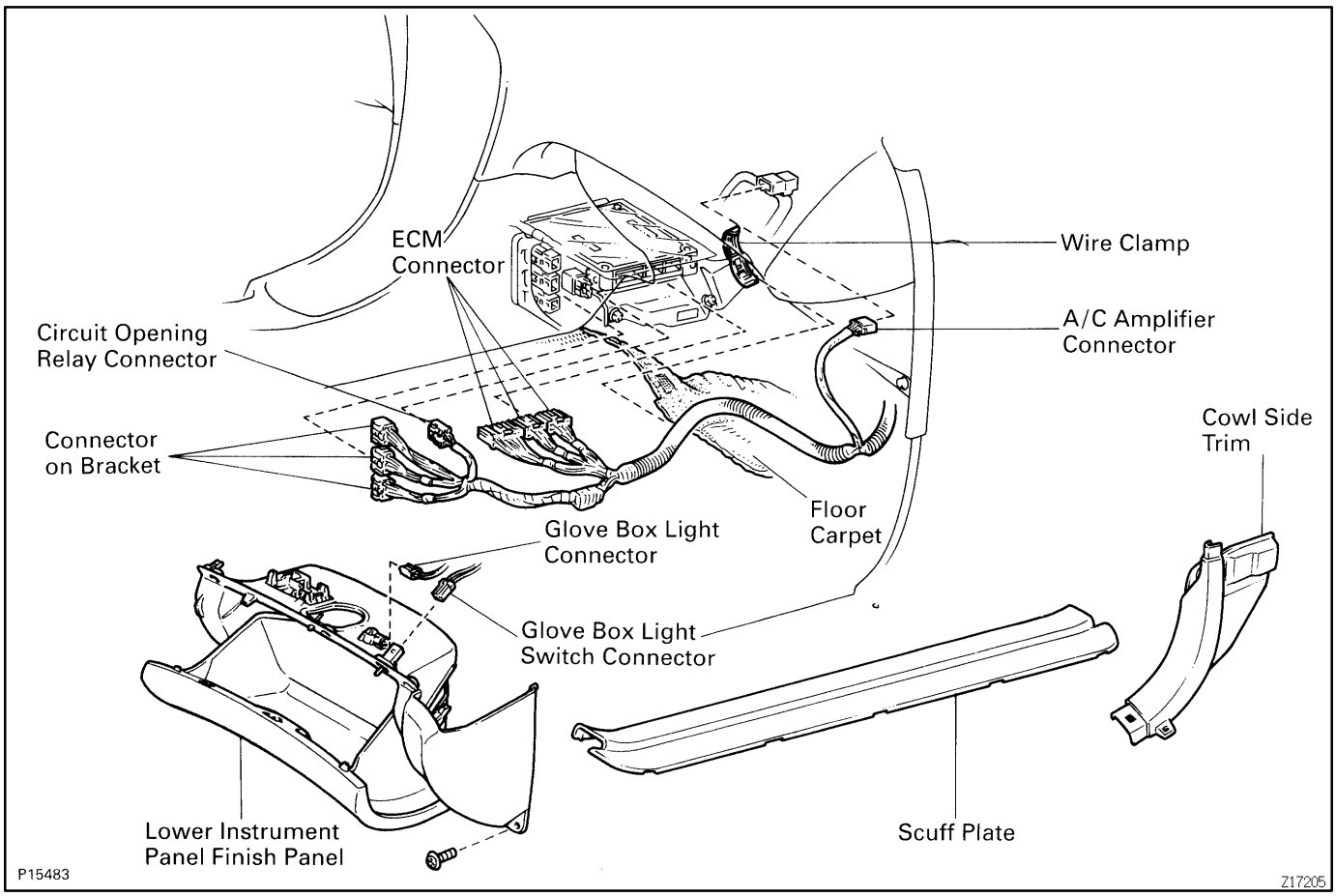
ECM
Connector
Wire Clamp
Circuit Opening
Relay Connector
A/C Amplifier
Connector
Cowl Side
Trim
Connector
on Bracket
Floor
Carpet
Glove Box Light
Connector
Glove Box Light
Switch Connector
Lower Instrument
Panel Finish Panel
Scuff Plate
P15483
Z17205

EXHAUST SYSTEM

COMPONENTS

EM1CG-01

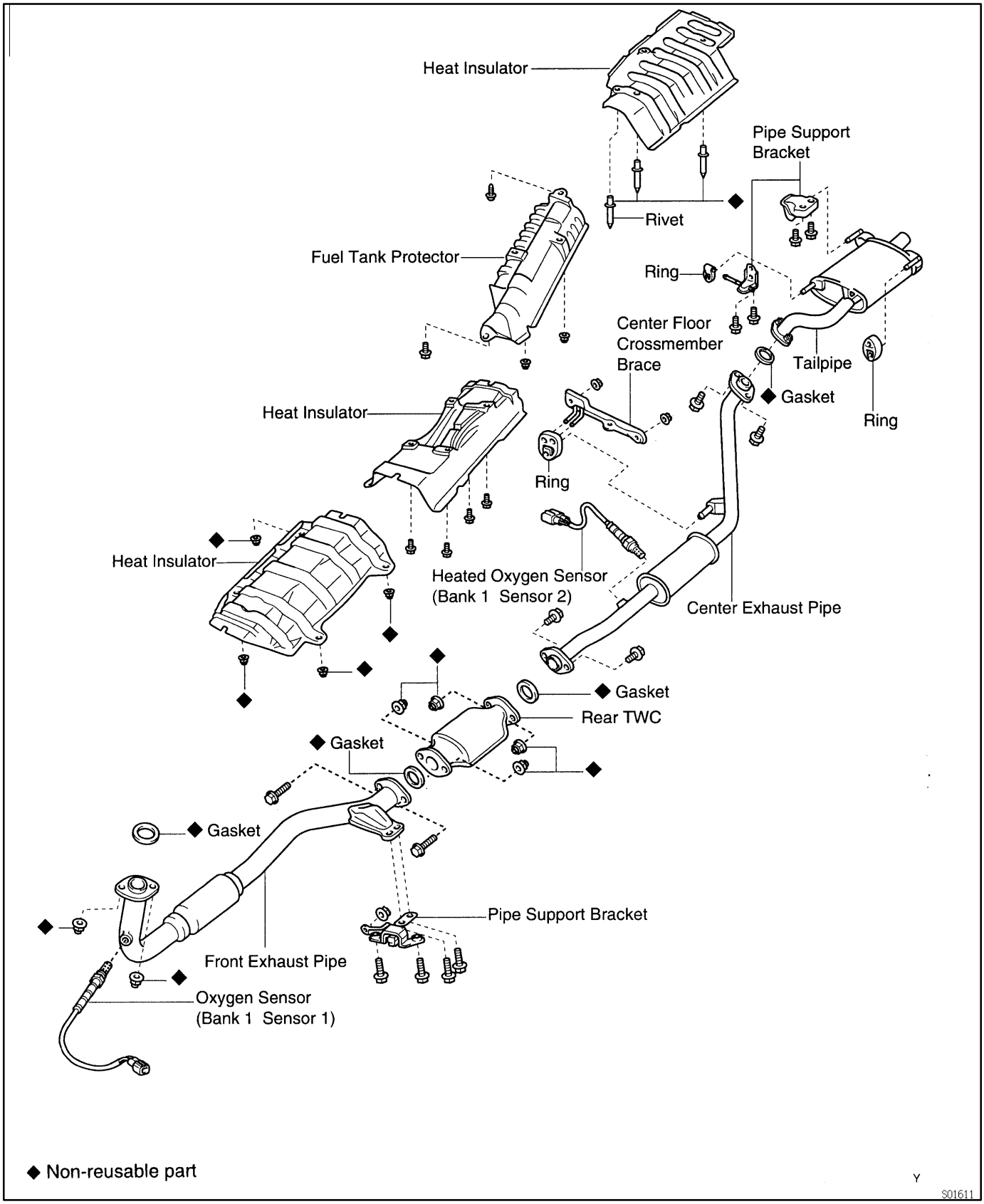

FUEL PRESSURE REGULATOR

COMPONENTS

SF0V1-03

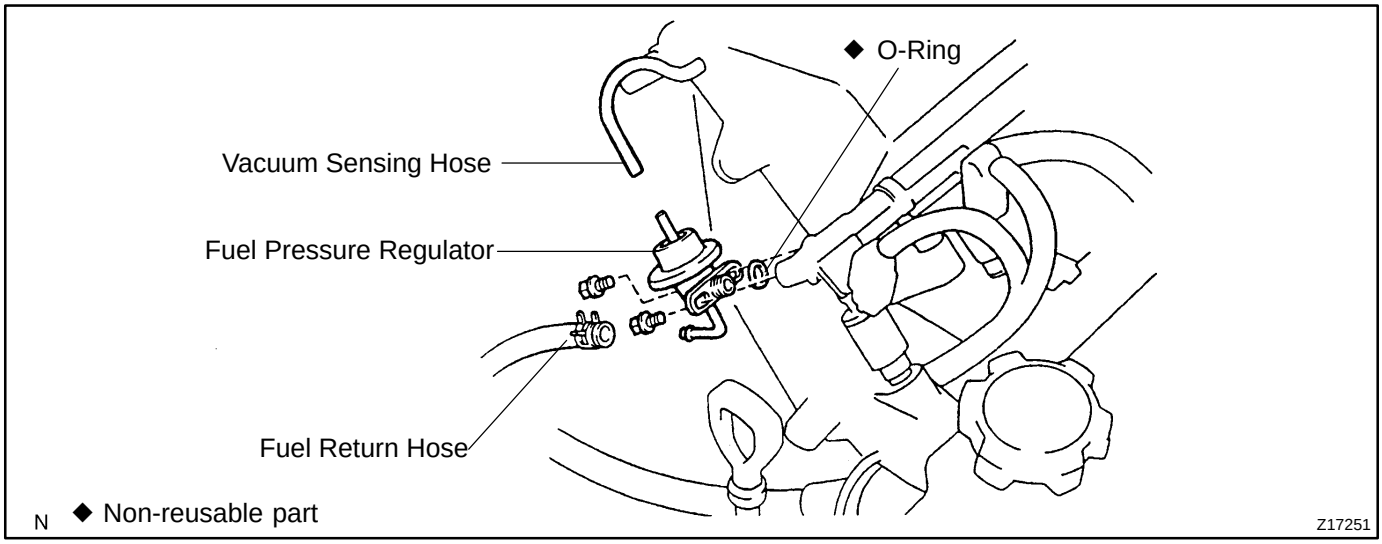

SF0W7-03

COMPONENTS

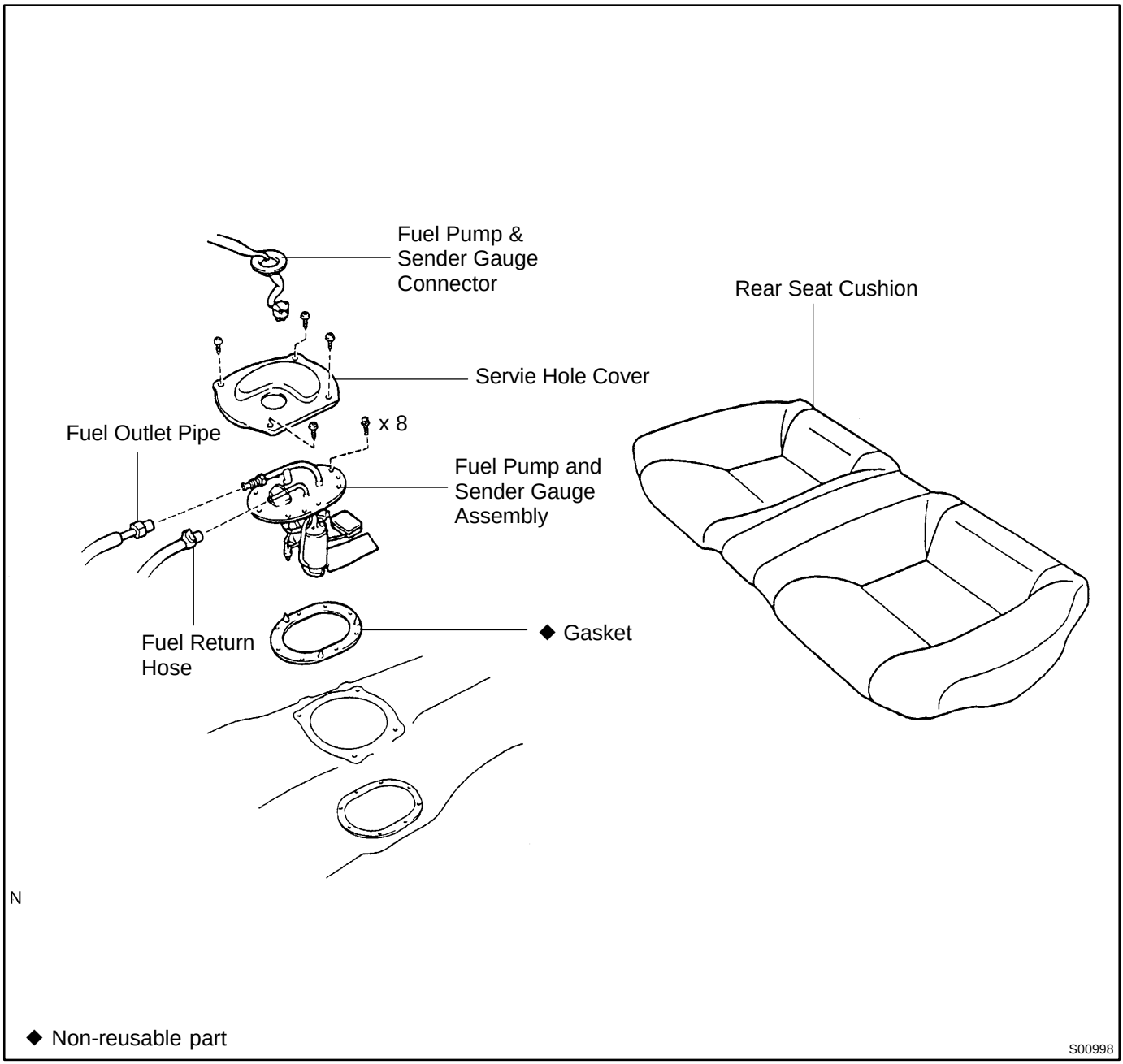

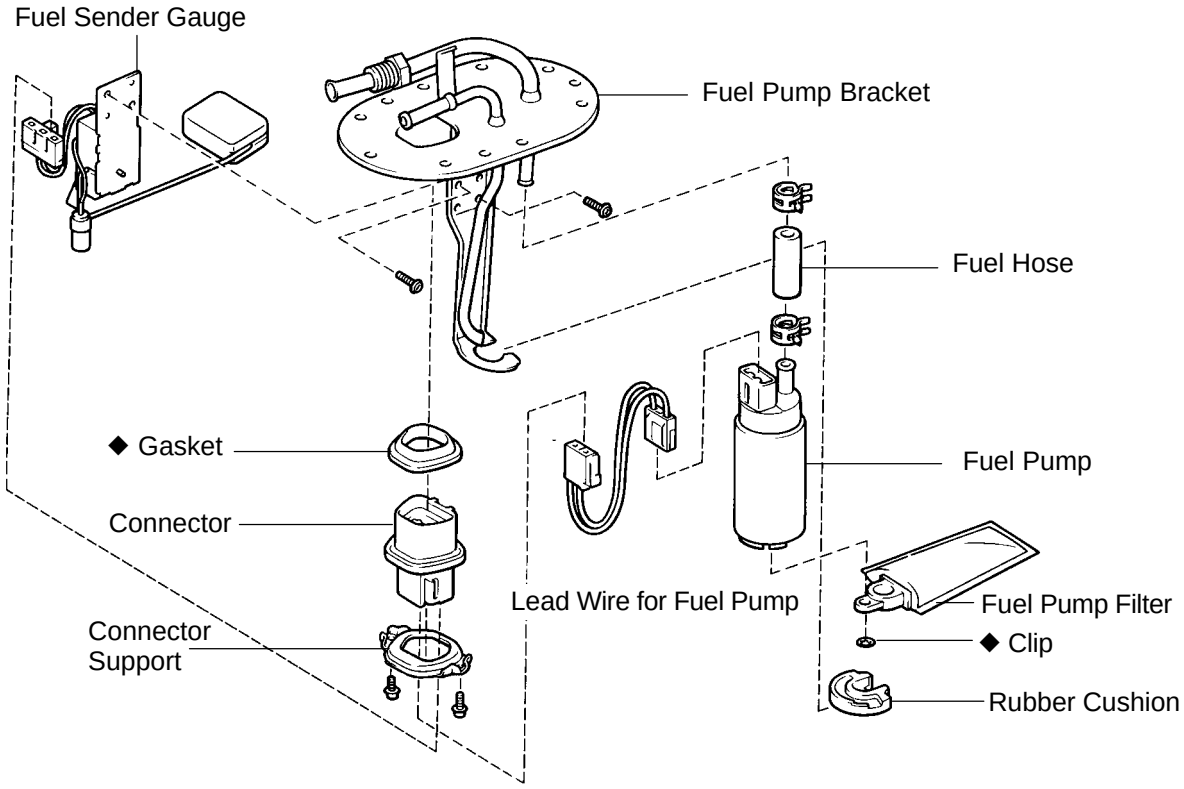

◆ Non-reusable part

S01524

SF0V5-03

COMPONENTS

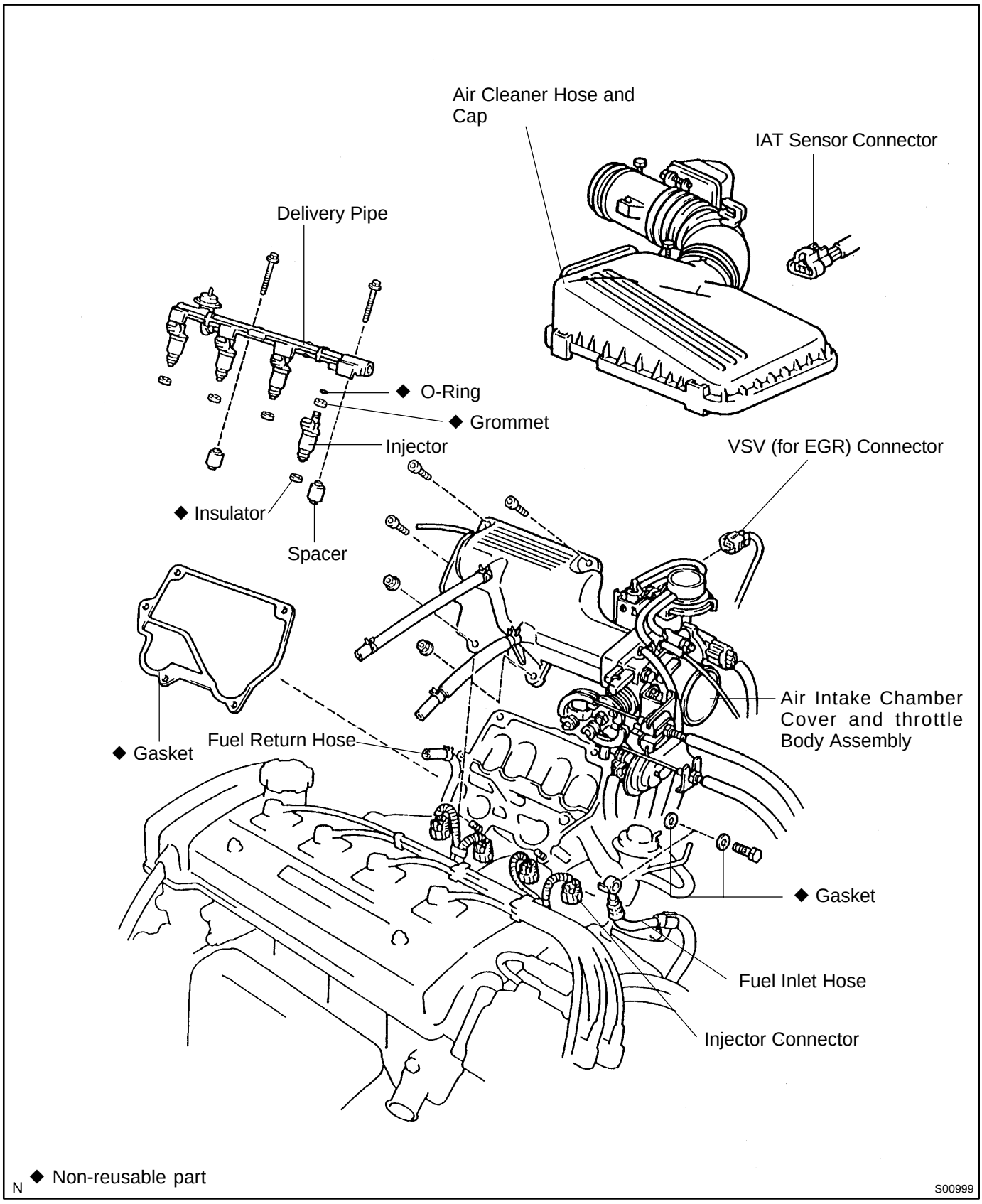

OIL PUMP

COMPONENTS

LU0JM-01

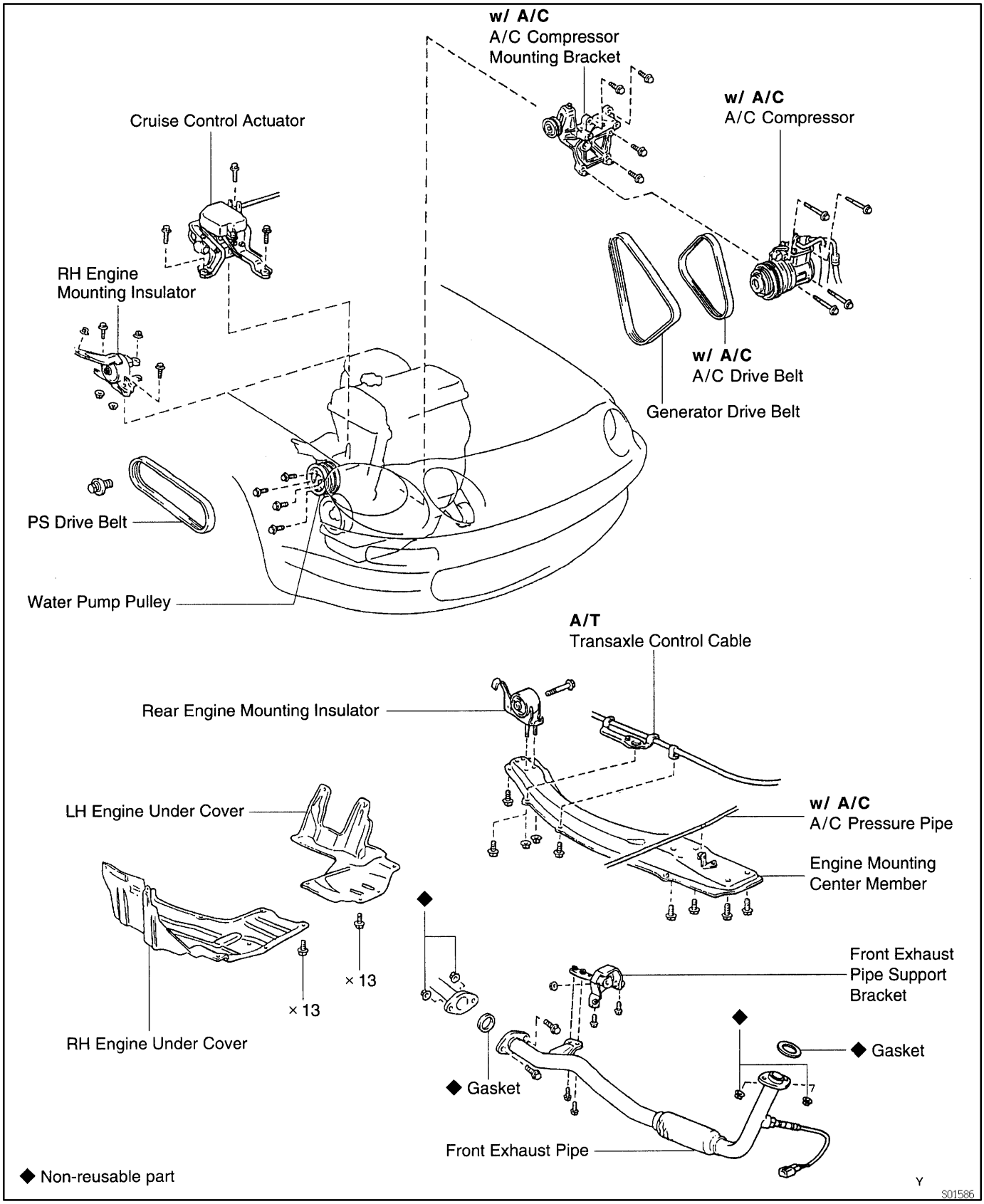

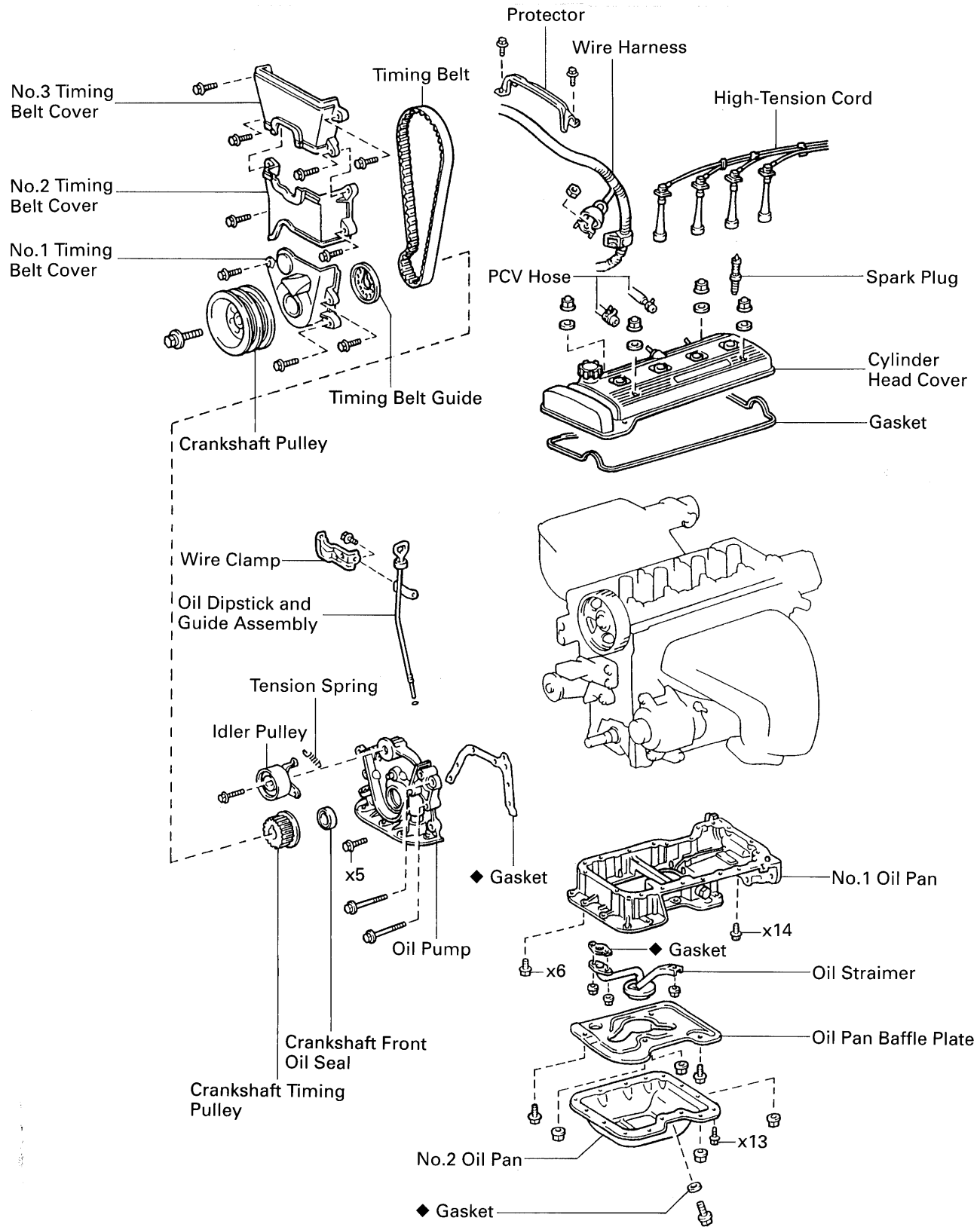

◆ Non-reusable part

P19442

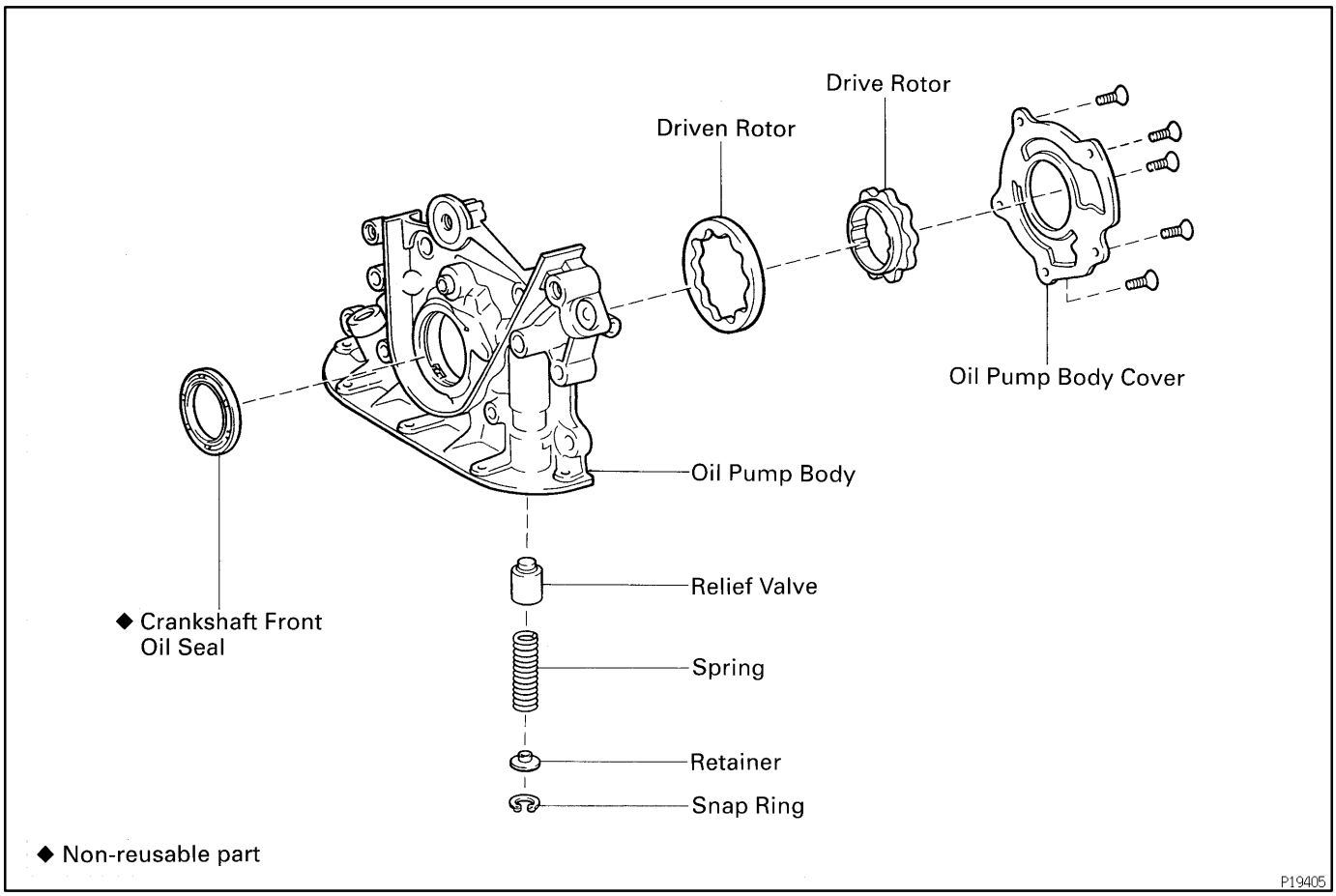
Drive Rotor
Driven Rotor
Oil Pump Body Cover
Oil Pump Body
Relief Valve
◆ Crankshaft Front Oil Seal
Spring
Retainer
Snap Ring
◆ Non-reusable part
P19405

CO0ZF-01

COMPONENTS

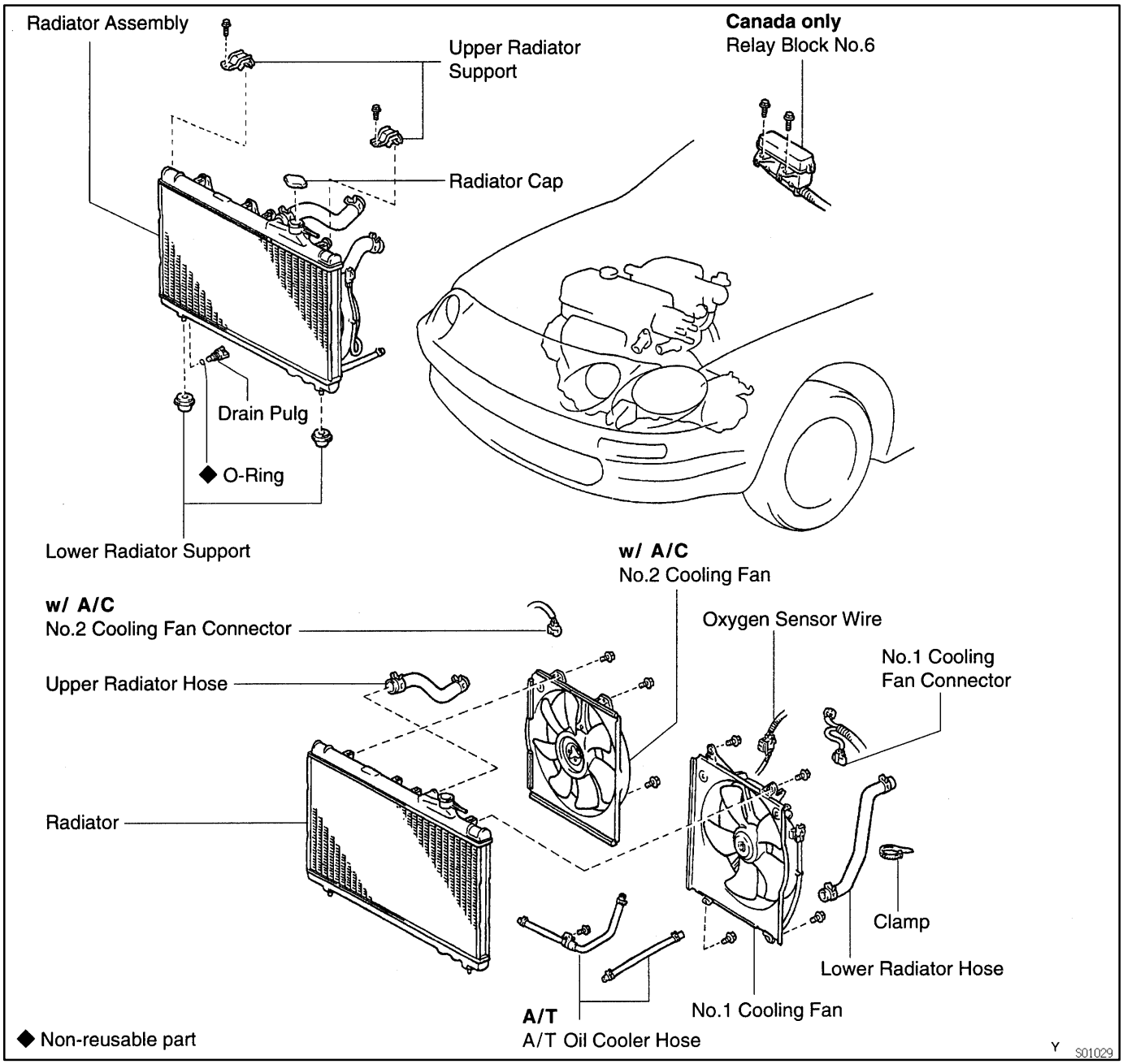

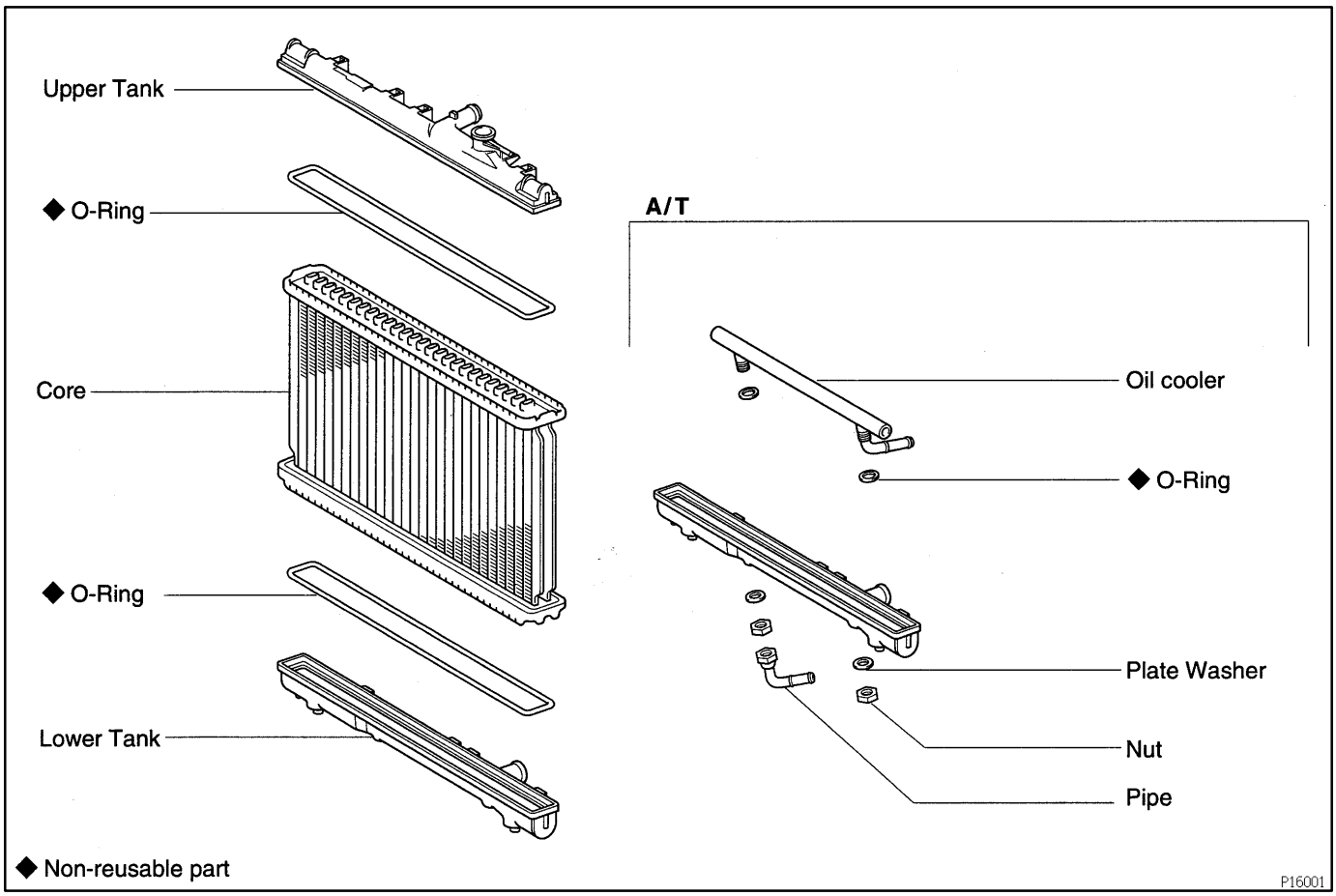
Upper Tank
◆ O-Ring
Core
◆ O-Ring
Lower Tank
A/T
Oil cooler
◆ O-Ring
Plate Washer
Nut
Pipe
◆ Non-reusable part
P16001

ST0JW-02

REMOVAL

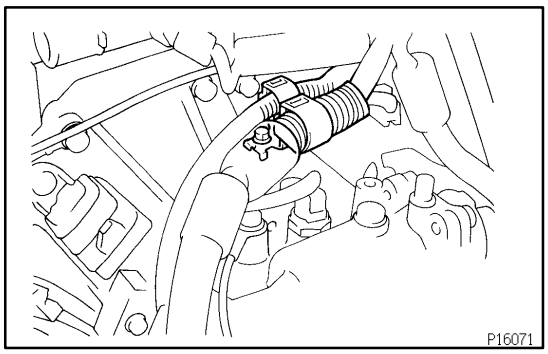

1. REMOVE AIR CLEANER CAP

2. DISCONNECT ENGINE WIRE CLAMP FROM TRANSAXLE

Remove the bolt, and disconnect the wire clamp from the transaxle.

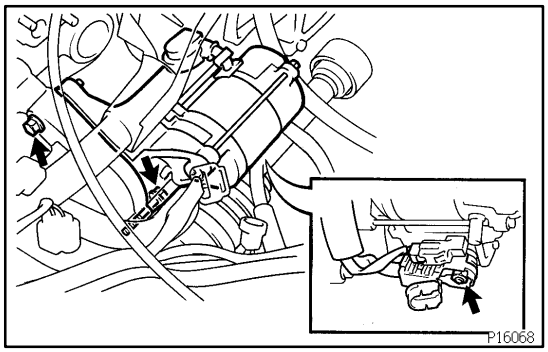

3. REMOVE STARTER

(a) Disconnect the starter connector.

(b) Remove the nut, and disconnect the starter cable.
Torque: 7.9 N·m (80 kgf·cm, 70 in.·lbf)

(c) Remove the 2 bolts and starter.
Torque: 39 N·m (400 kgf·cm, 29 ft·lbf)

TIMING BELT

COMPONENTS

EM1BX-01

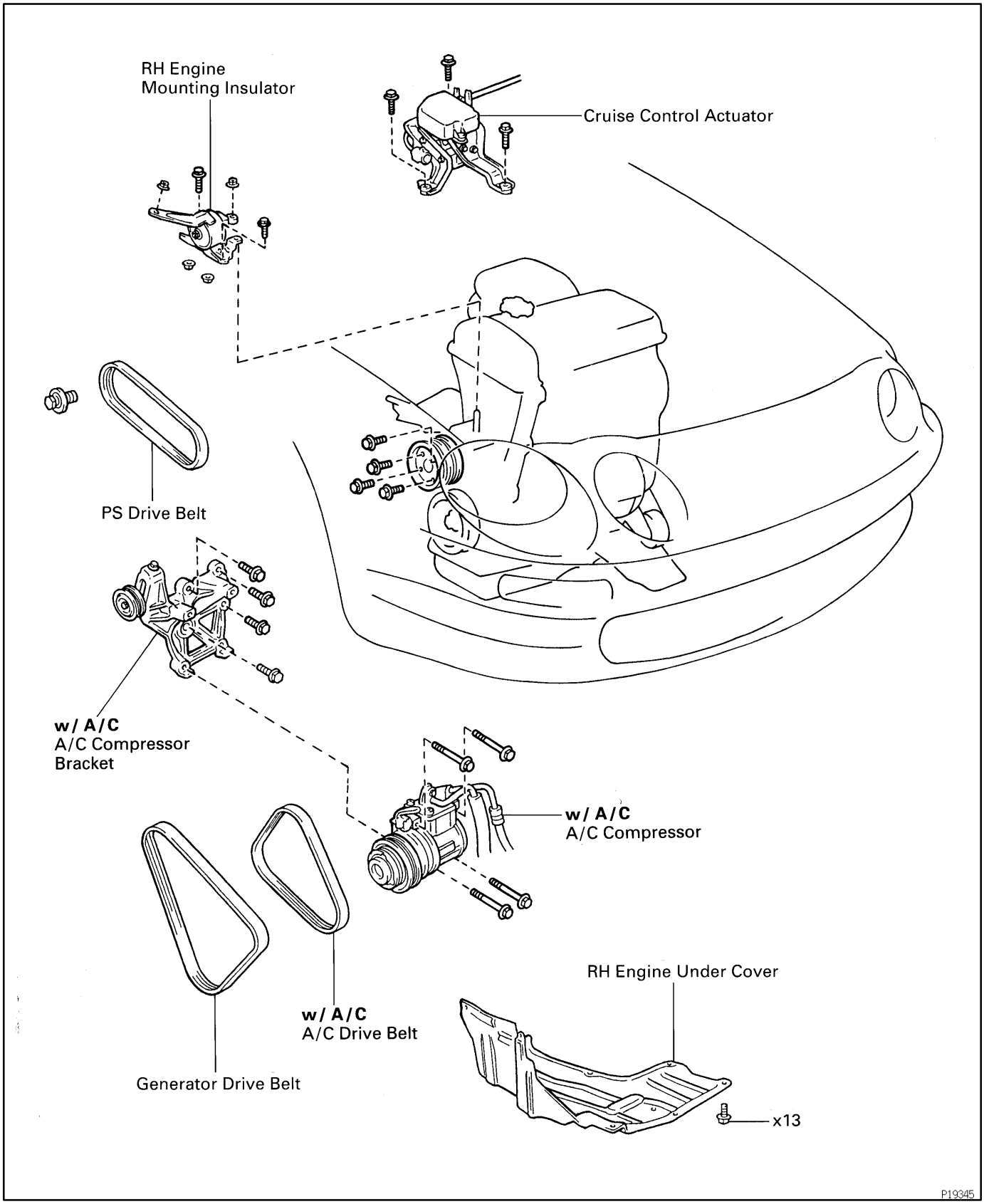

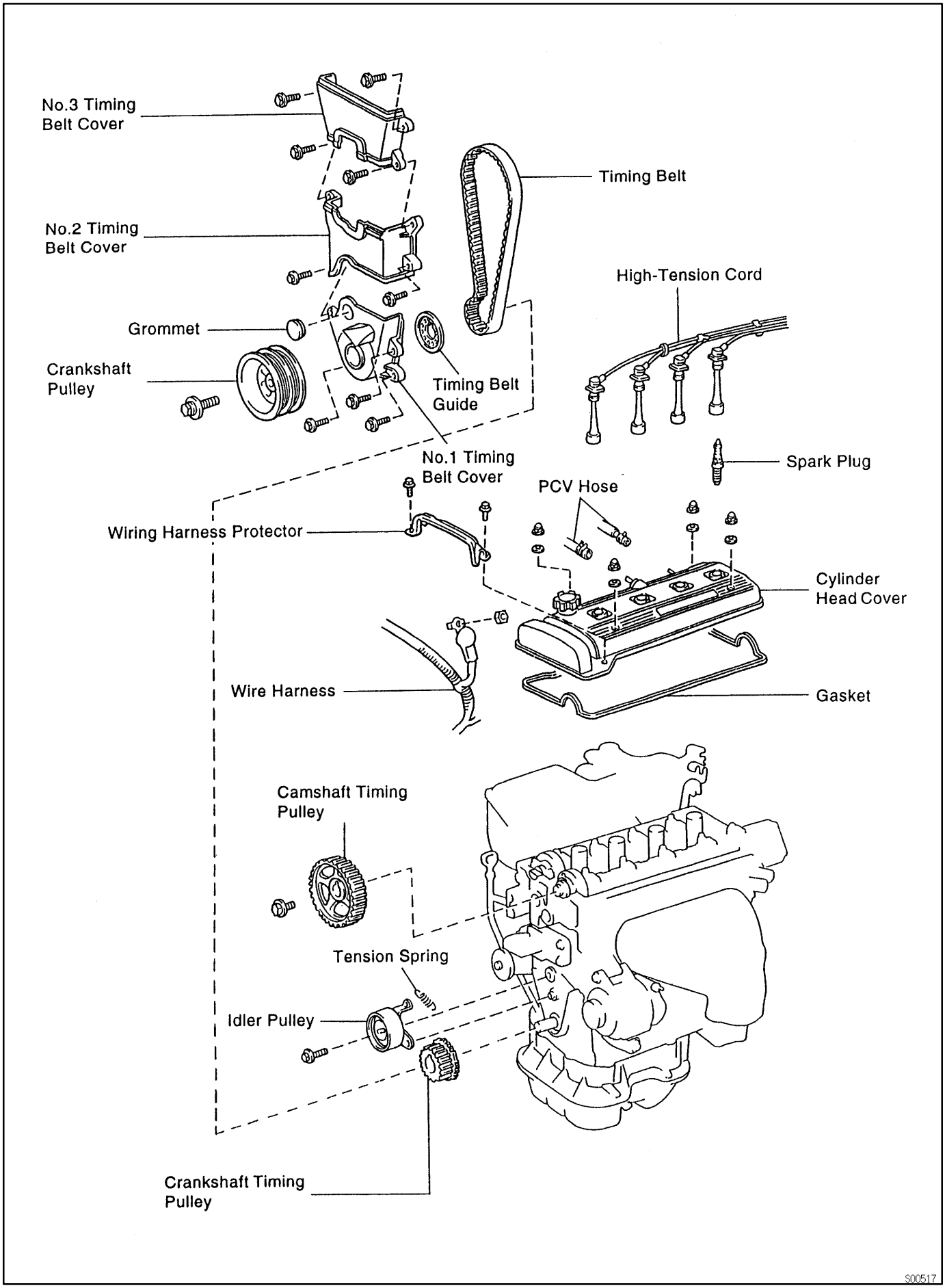
No.3 Timing Belt Cover
No.2 Timing Belt Cover
Grommet
Crankshaft Pulley
Timing Belt
Timing Belt Guide
No.1 Timing Belt Cover
High-Tension Cord
Spark Plug
PCV Hose
Wiring Harness Protector
Cylinder Head Cover
Wire Harness
Gasket
Camshaft Timing Pulley
Tension Spring
Idler Pulley
Crankshaft Timing Pulley
S00517

WATER PUMP

COMPONENTS

CO0Z5-01

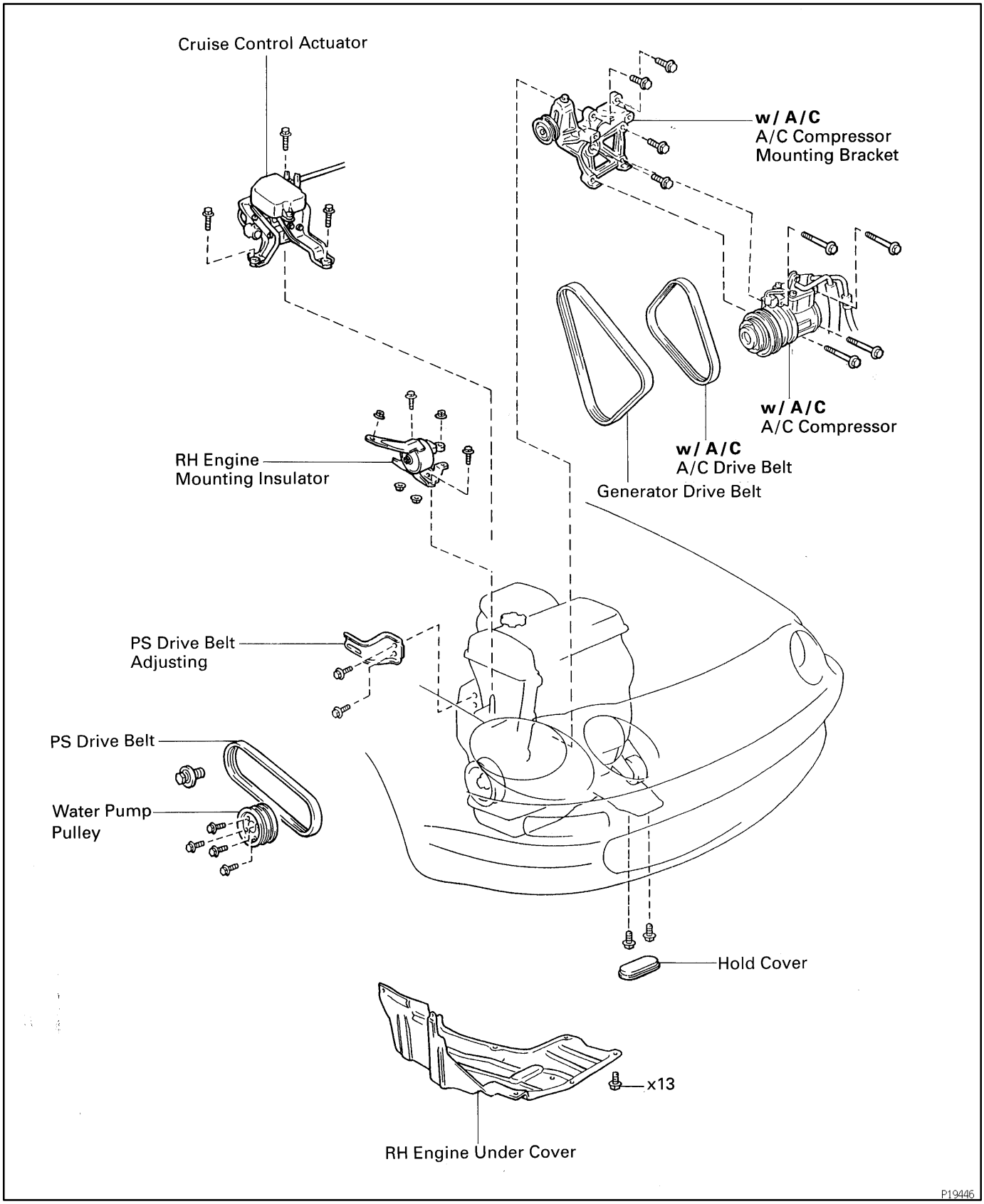

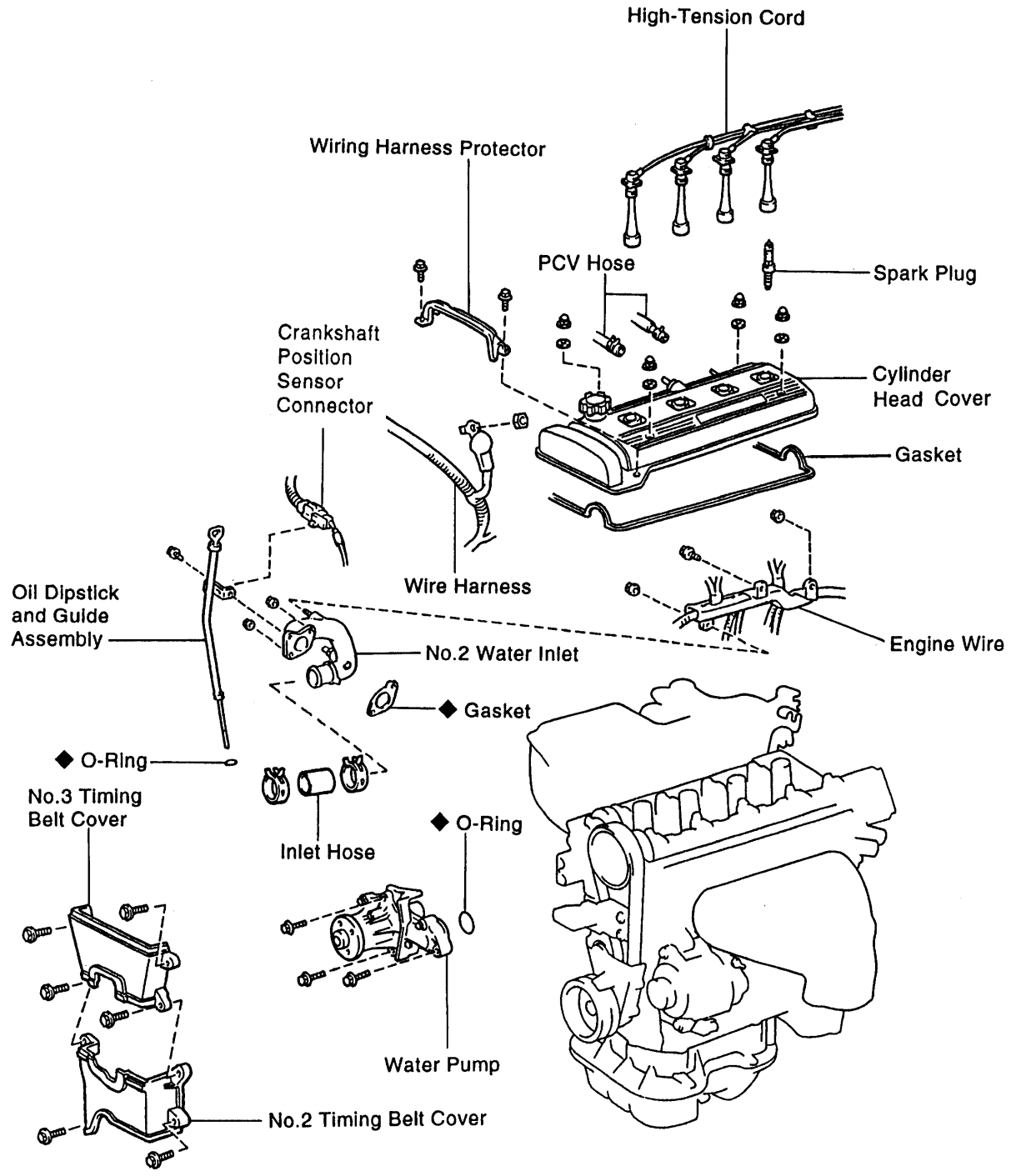
High-Tension Cord
Wiring Harness Protector
PCV Hose
Spark Plug
Crankshaft Position Sensor Connector
Cylinder Head Cover
Gasket
Wire Harness
Oil Dipstick and Guide Assembly
Engine Wire
No.2 Water Inlet
◆ Gasket
◆ O-Ring
No.3 Timing Belt Cover
Inlet Hose
◆ O-Ring
Water Pump
No.2 Timing Belt Cover
◆ Non-reusable part
P20299

STARTER

COMPONENTS

ST0JV-02

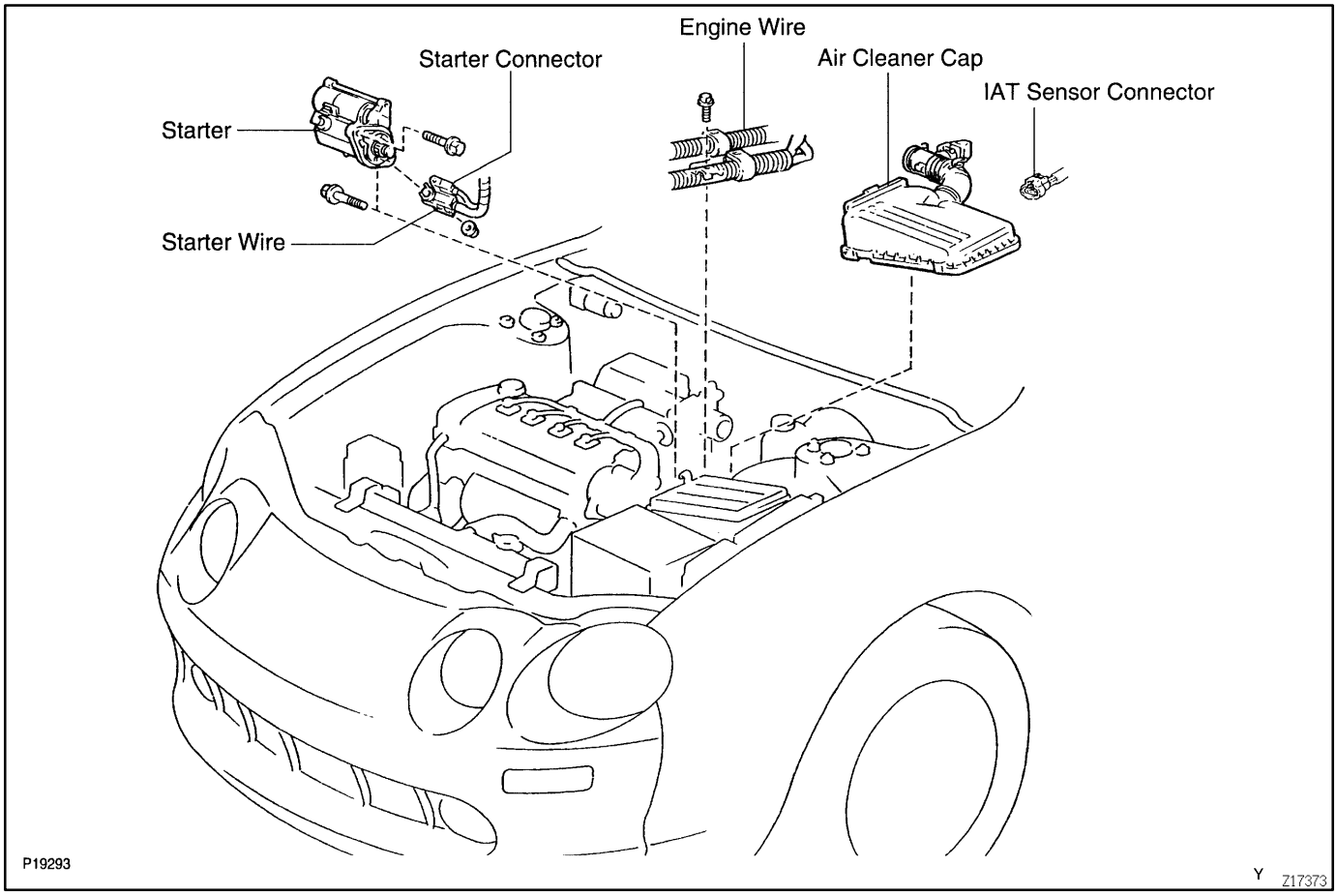

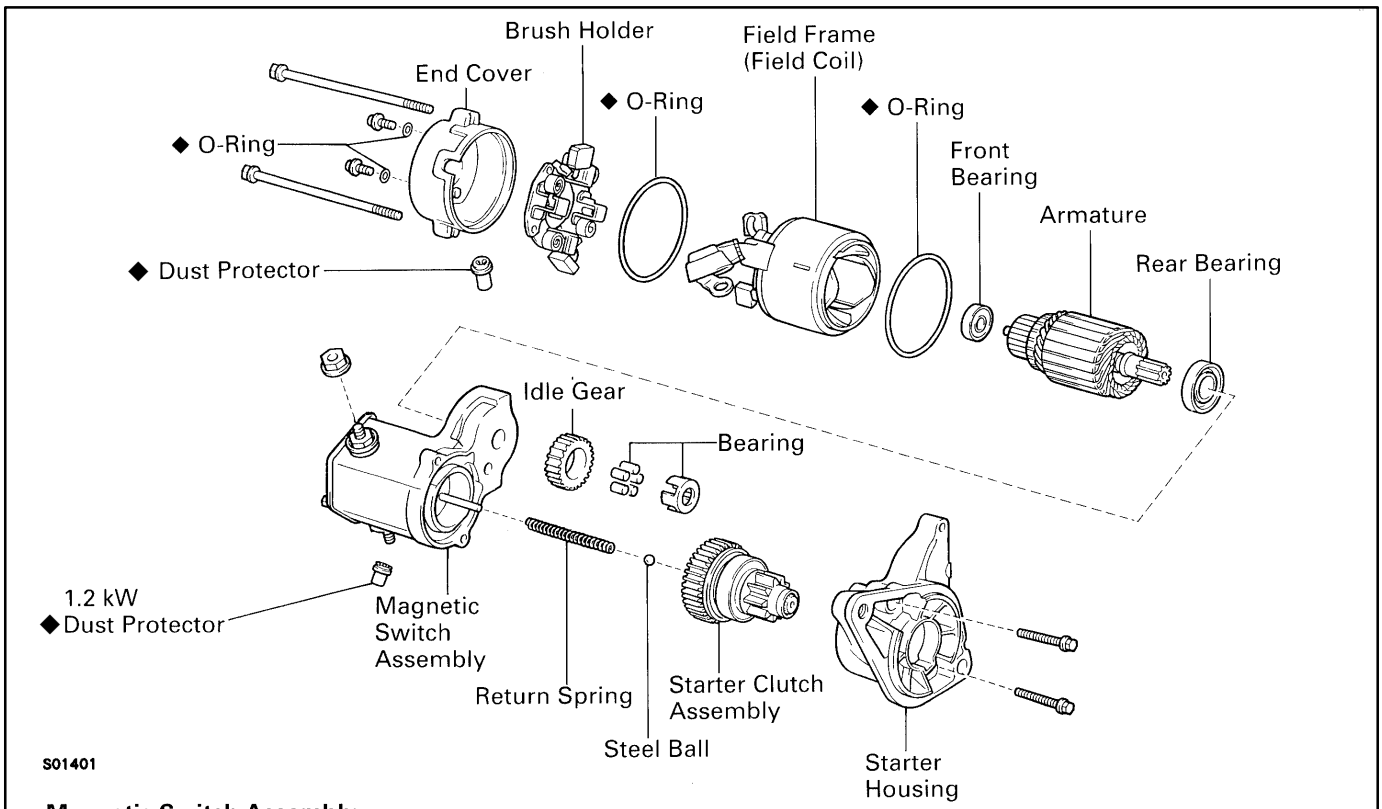

Magnetic Switch Assembly

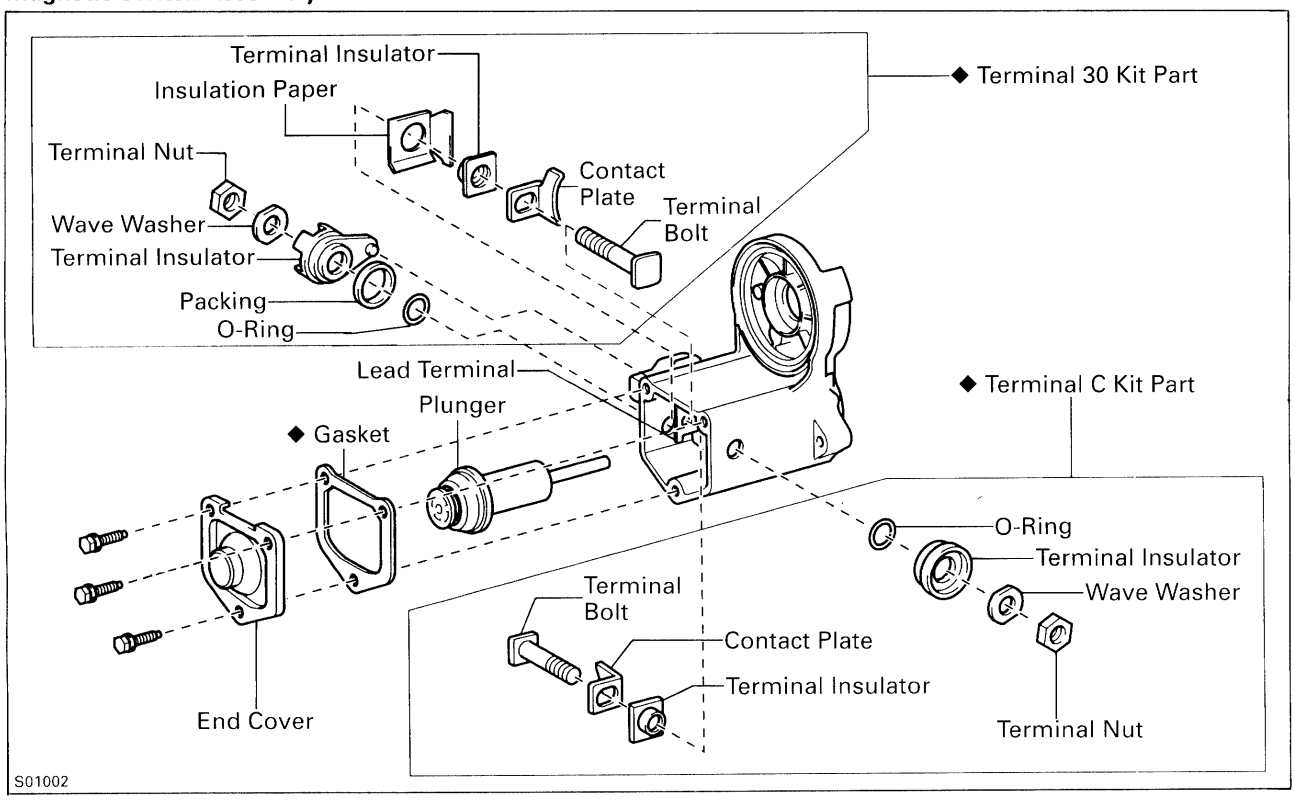

◆ Non-reusable part

Z17345

AUTOMATIC TRANSAXLE UNIT

AX090-02

COMPONENTS

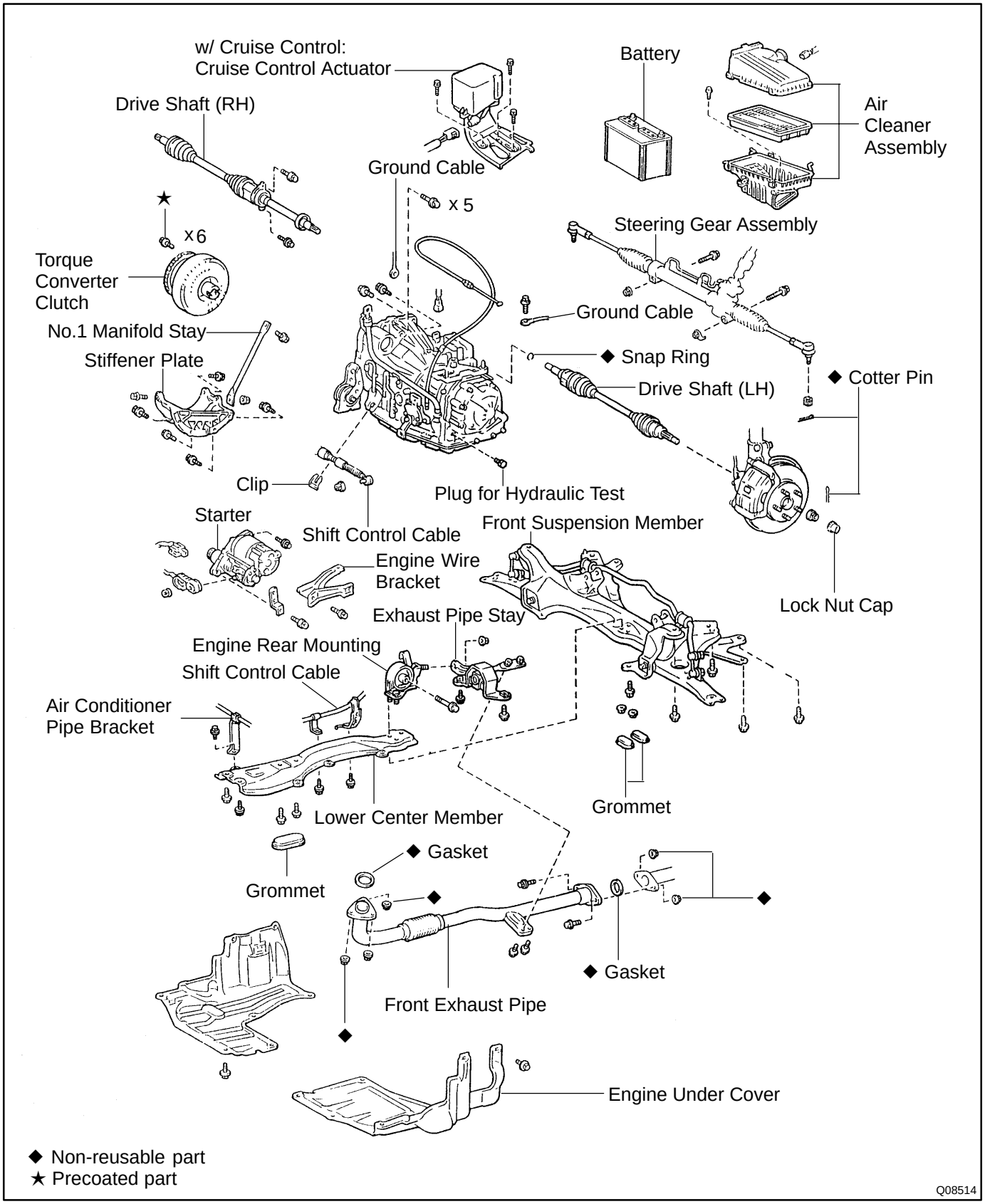

AX0QW-01

OPERATION

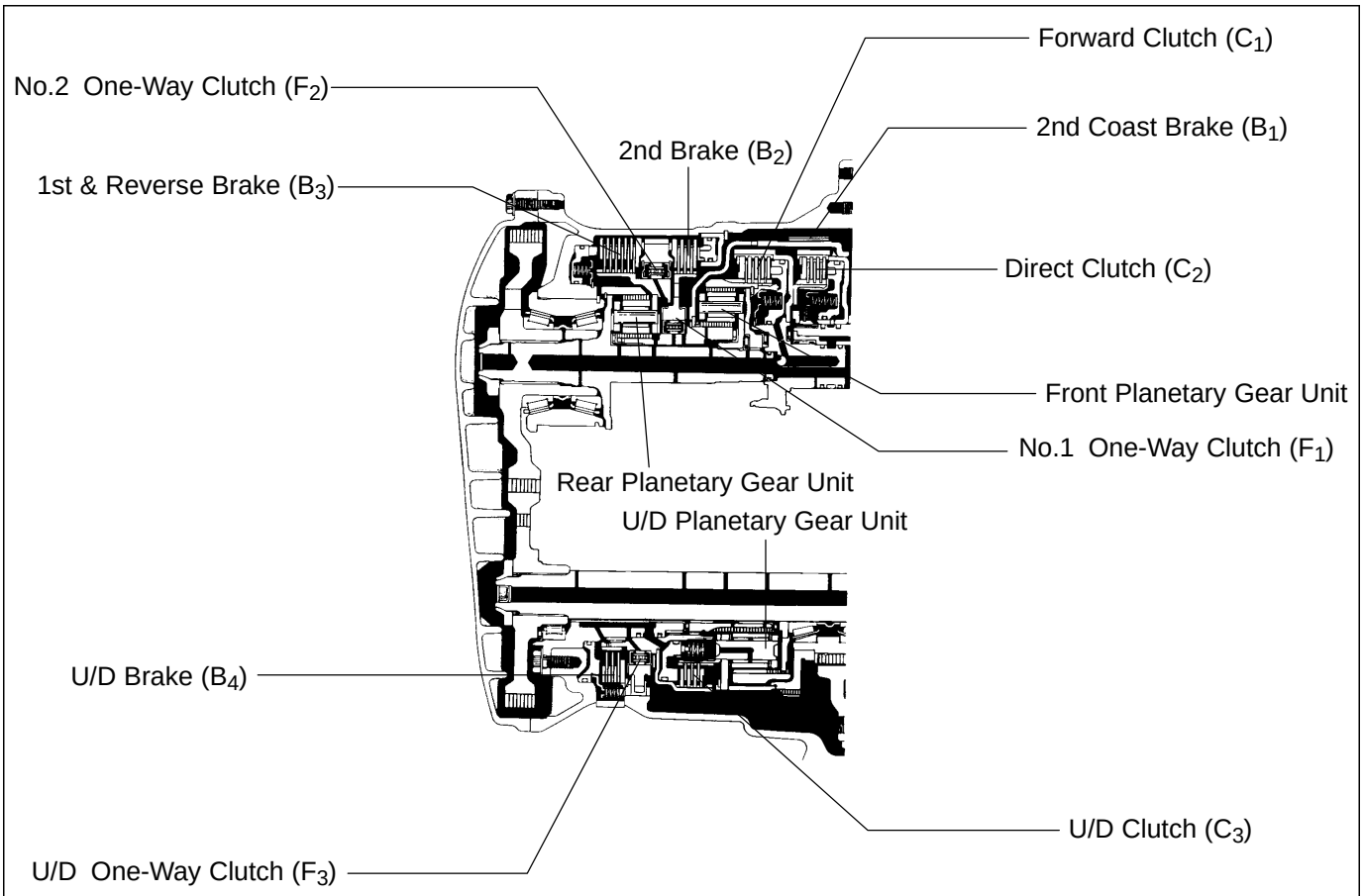

Shift Lever Range	Gear	Shift Solenoid Valve No.1	Shift Solenoid Valve No.2	C_1	C_2	C_3	B_1	B_2	B_3	B_4	F_1	F_2	F_3
P	Park	ON	OFF							●			
R	Reverse	ON	OFF		●				●	●			
N	Neutral	ON	OFF							●			
D	1st	ON	OFF	●						●		●	●
	2nd	ON	ON	●				●		●	●		●
	3rd	OFF	ON	●	●			●		●			●
	O/D	OFF	OFF	●	●	●		●					
2	1st	ON	OFF	●						●		●	●
	2nd	ON	ON	●			●	●		●	●		●
	3rd*	OFF	ON	●	●			●		●			●
L	1st	ON	OFF	●					●	●		●	●
	2nd*	ON	ON	●			●	●		●	●		●

● : Operating

*: Down-shift only in the 3rd gear for the 2 range and 2nd gear for the L range - no up-shift

F00484

BACK DOOR GLASS

COMPONENTS

BO1EL-04

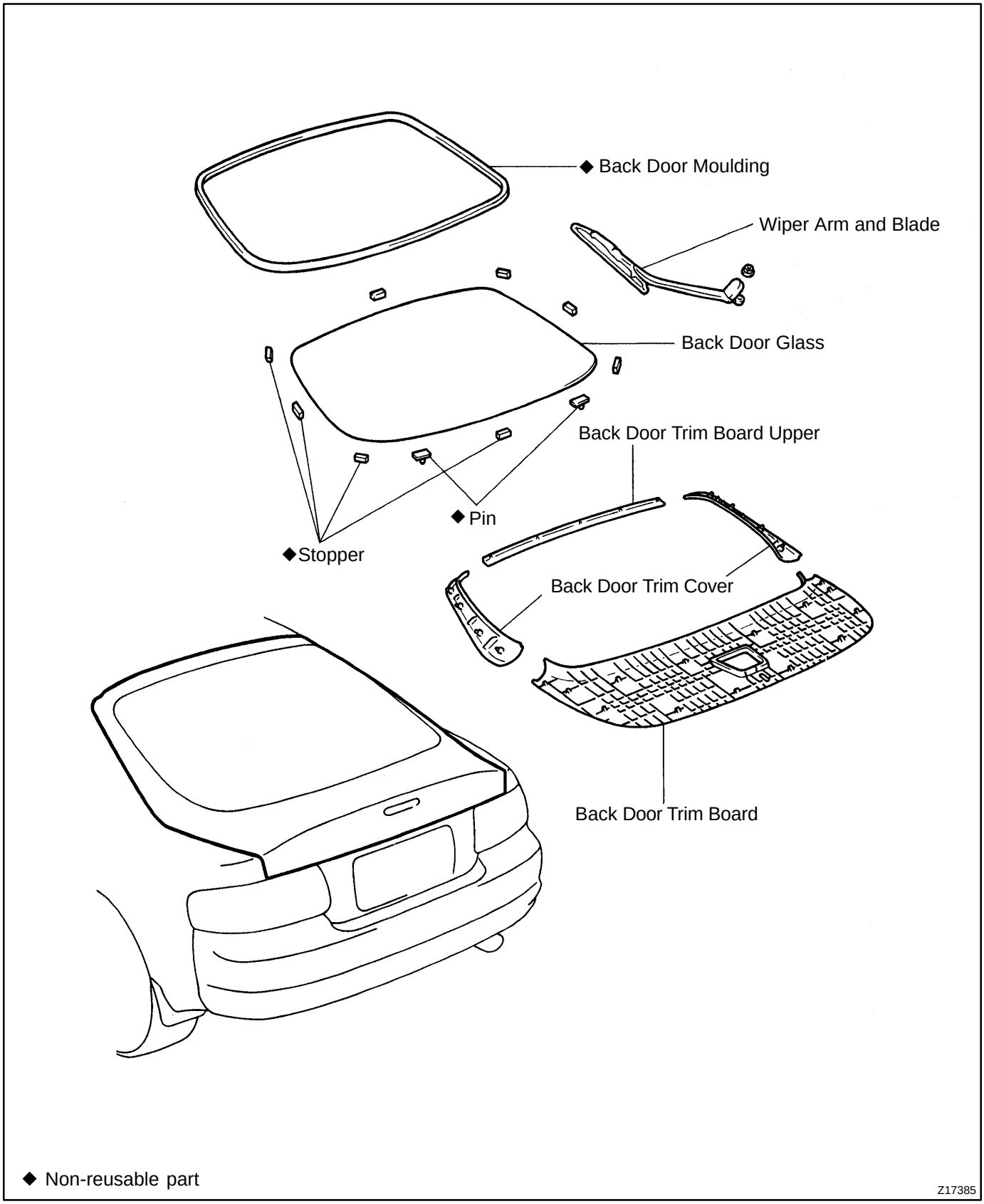

◆ Non-reusable part

Z17385

BACK DOOR

COMPONENTS

BO1DO-04

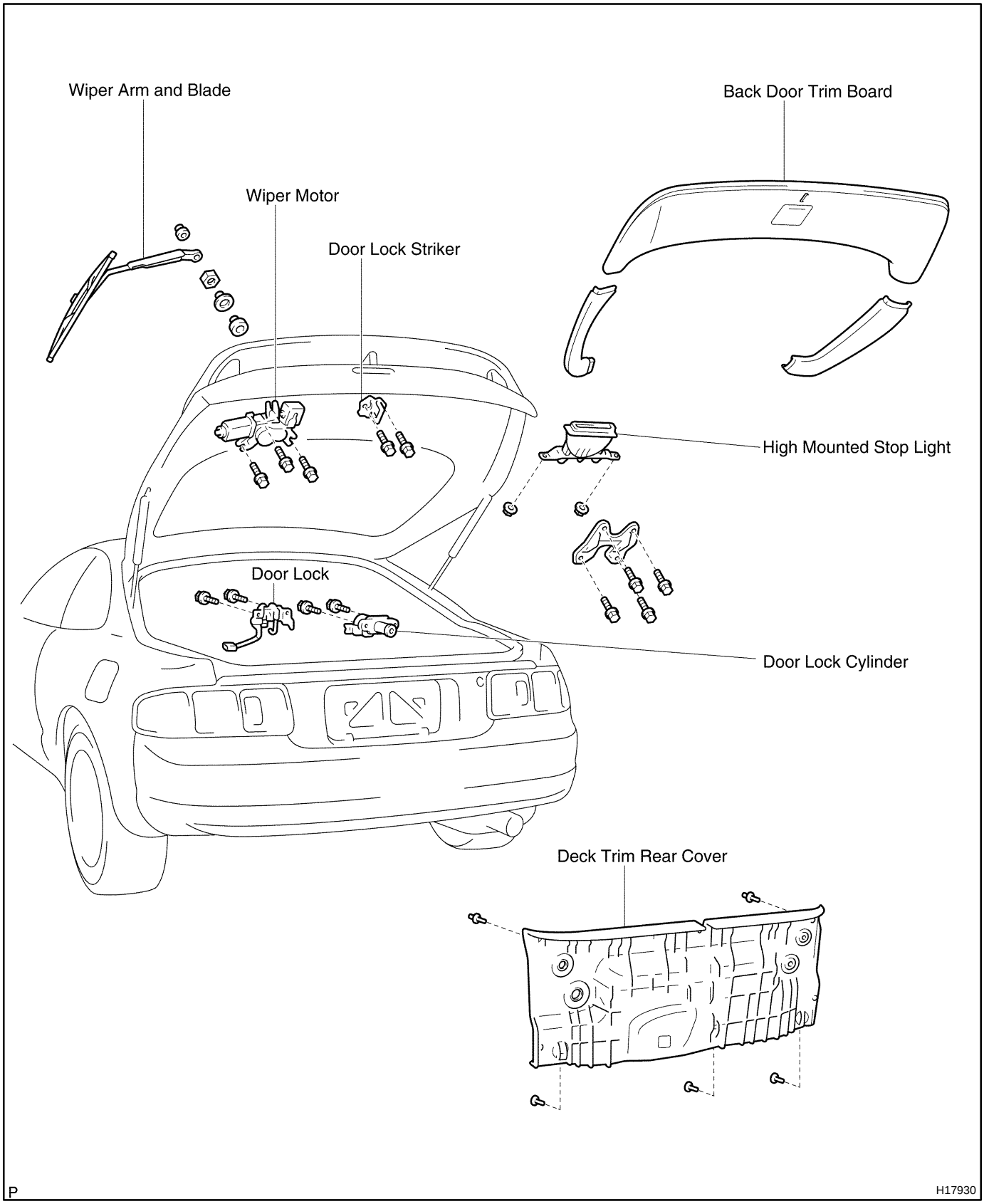

BACK WINDOW GLASS

COMPONENTS

BO1EI-03

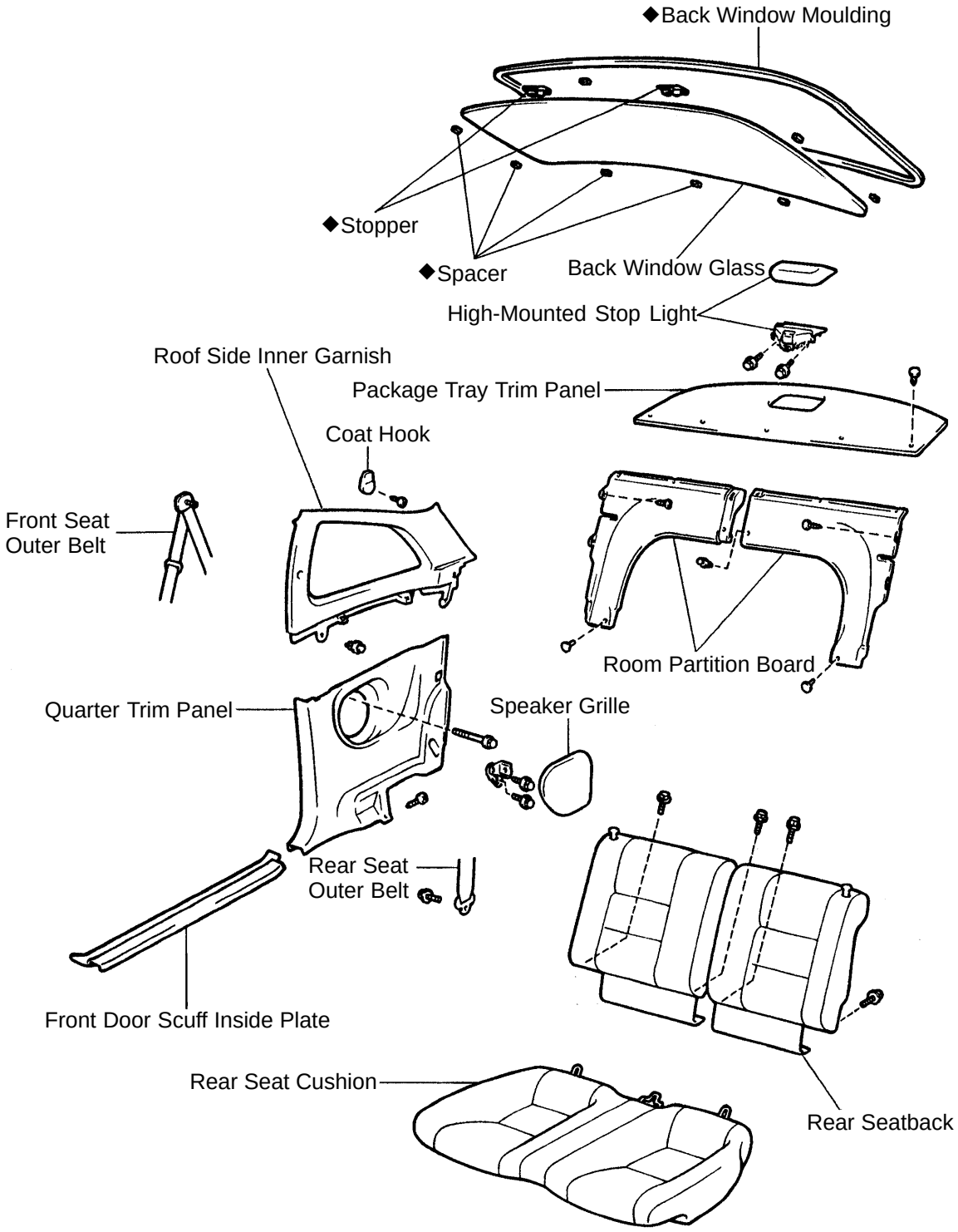

◆ Non-reusable part

Z17384

DIFFERENTIAL CASE

COMPONENTS

MX0BV-01

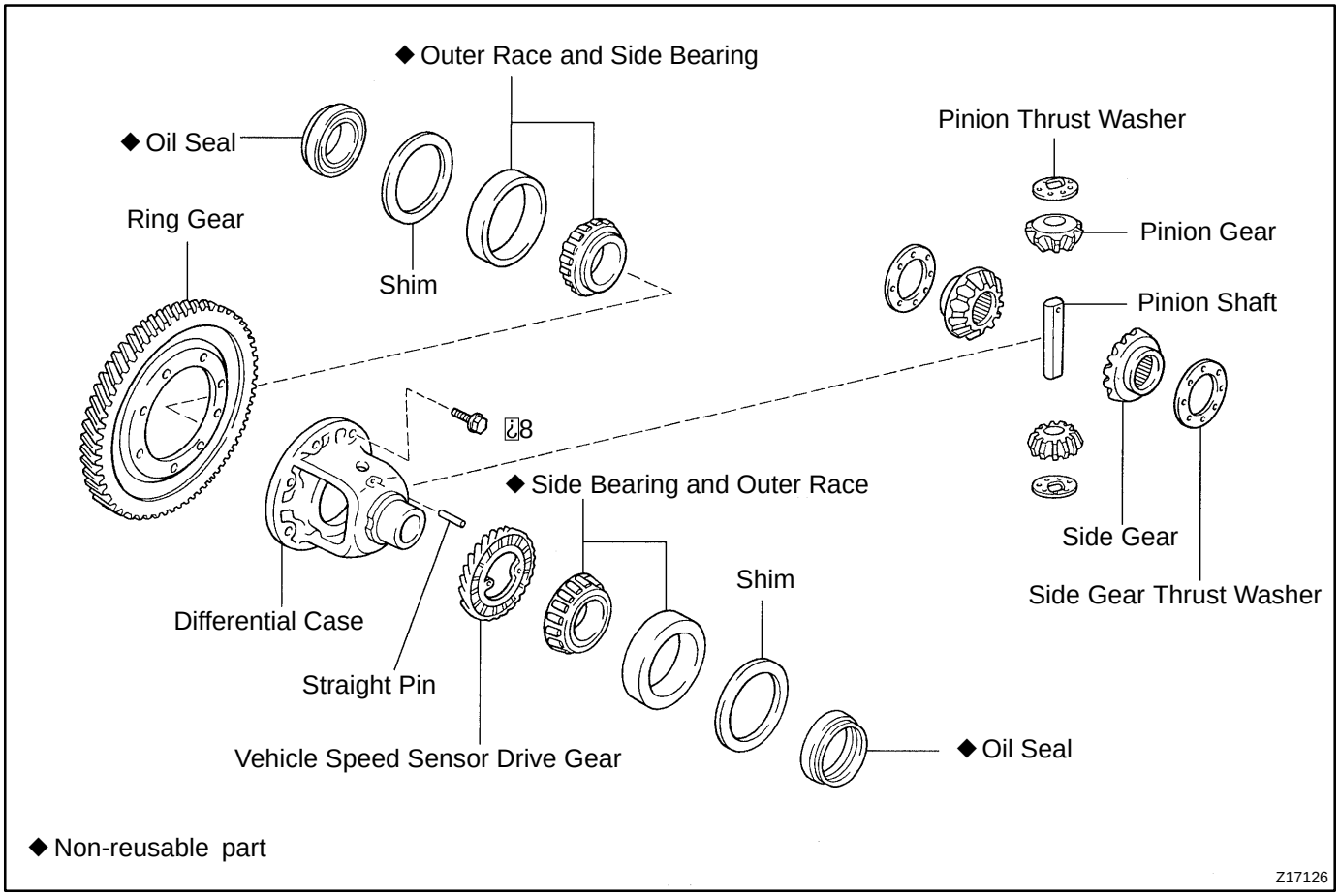

INPUT SHAFT

COMPONENTS

MX0BM-01

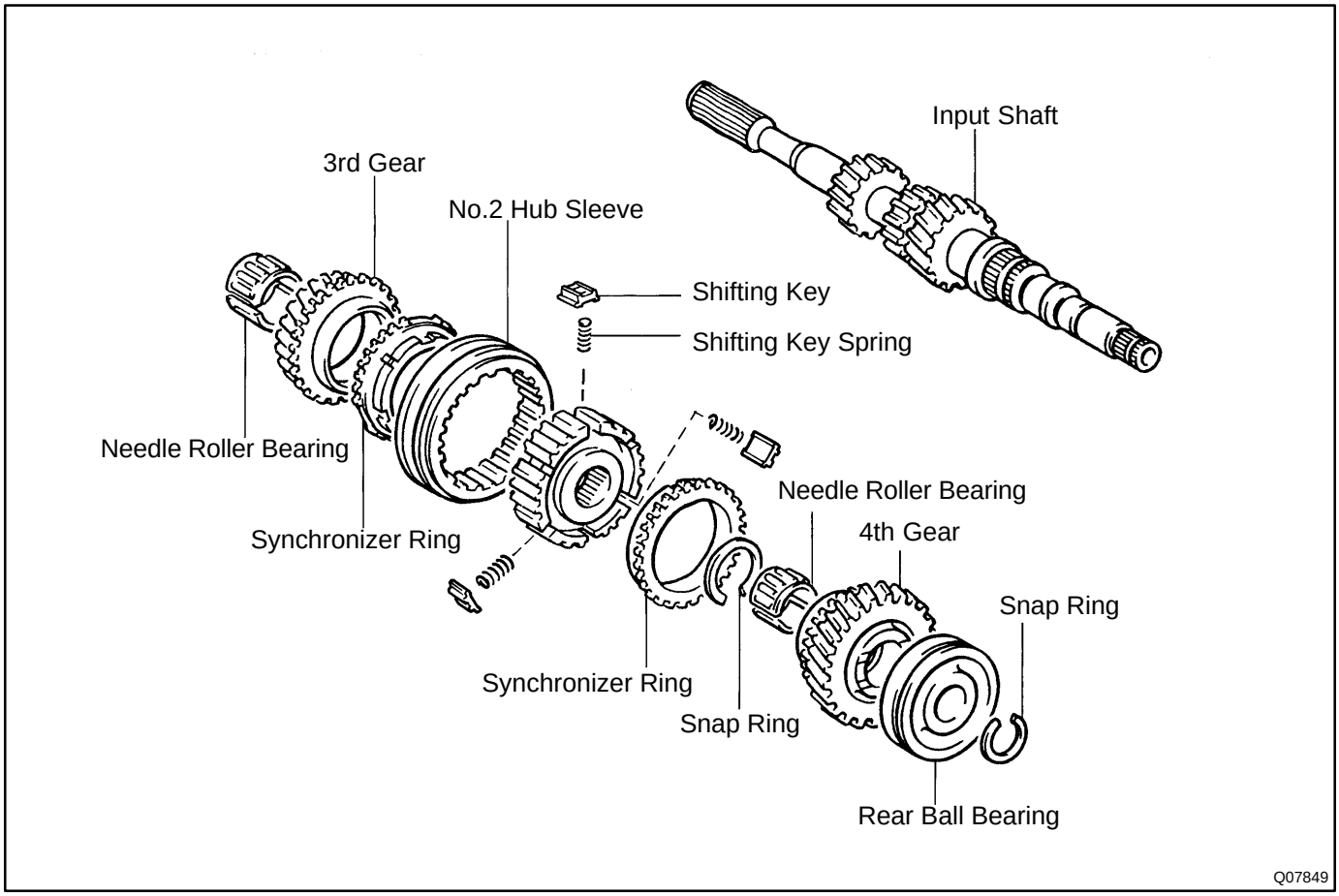

MANUAL TRANSAXLE ASSEMBLY

MX0BI-02

COMPONENTS

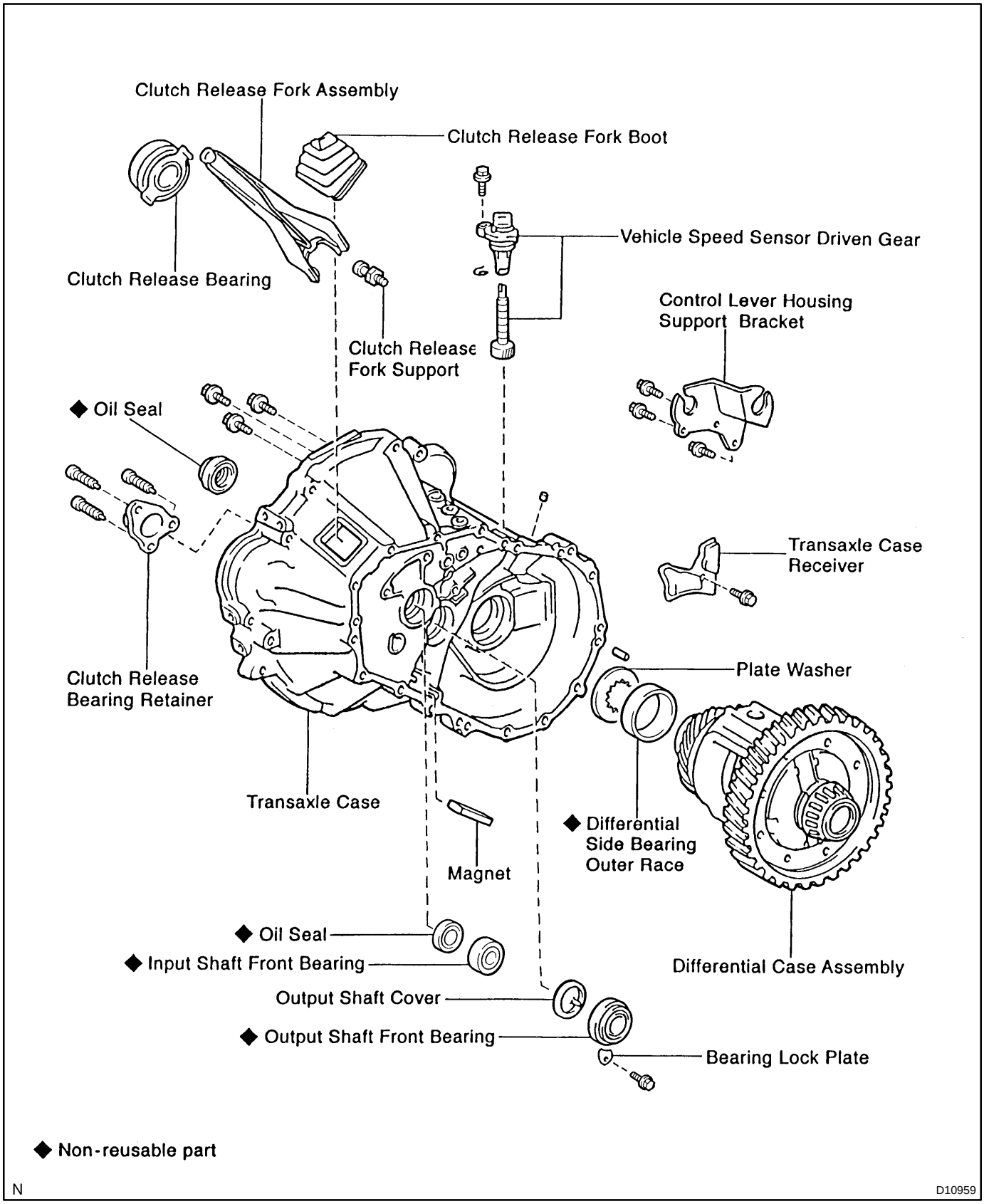

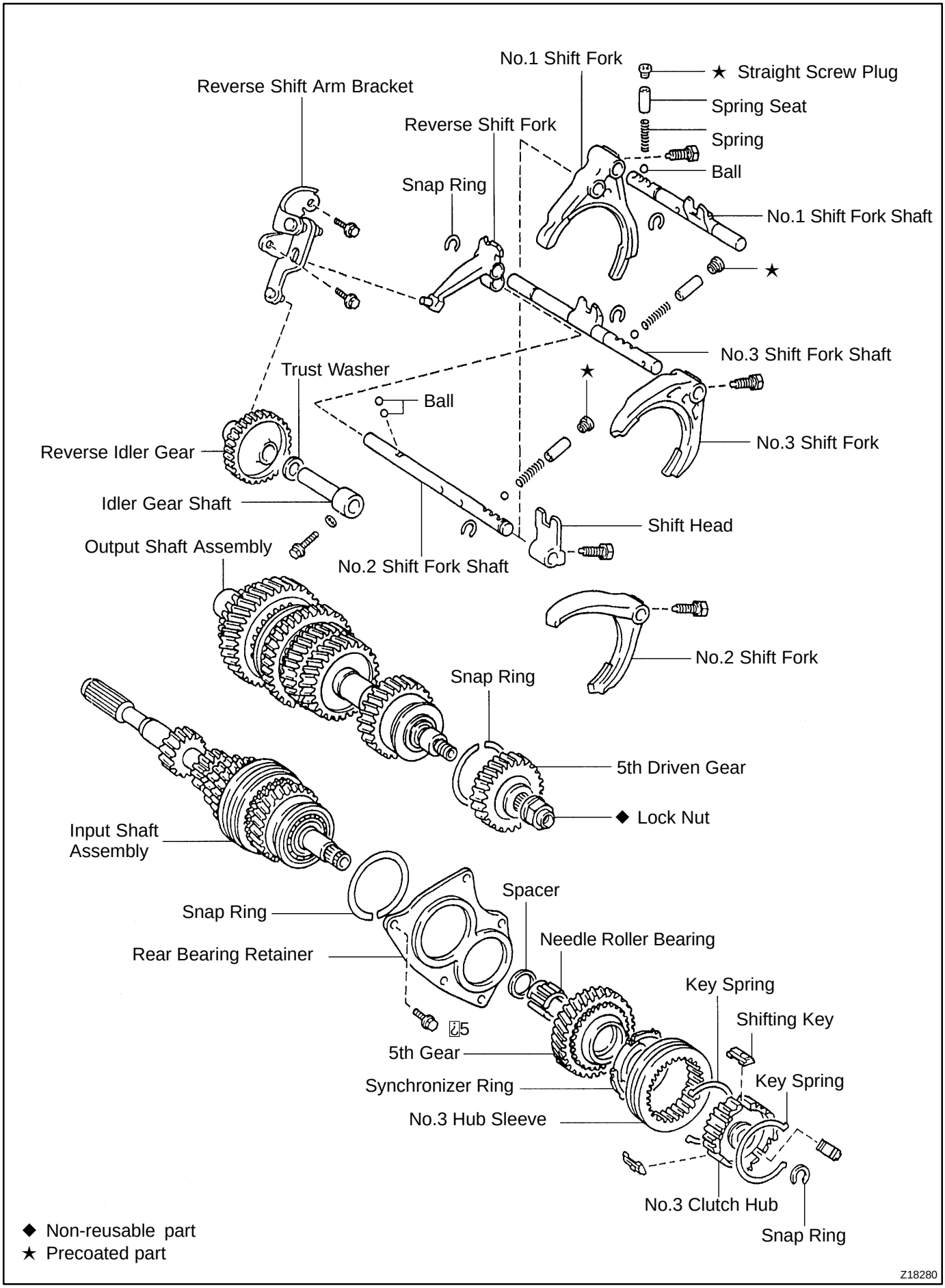
No.1 Shift Fork
★ Straight Screw Plug
Reverse Shift Arm Bracket
Spring Seat
Reverse Shift Fork
Spring
Ball
Snap Ring
No.1 Shift Fork Shaft
★
No.3 Shift Fork Shaft
Trust Washer
★
Ball
No.3 Shift Fork
Reverse Idler Gear
Idler Gear Shaft
Shift Head
Output Shaft Assembly
No.2 Shift Fork Shaft
No.2 Shift Fork
Snap Ring
5th Driven Gear
◆ Lock Nut
Input Shaft Assembly
Spacer
Snap Ring
Needle Roller Bearing
Rear Bearing Retainer
Key Spring
Shifting Key
5th Gear
Synchronizer Ring
Key Spring
No.3 Hub Sleeve
No.3 Clutch Hub
Snap Ring
◆ Non-reusable part
★ Precoated part
Z18280

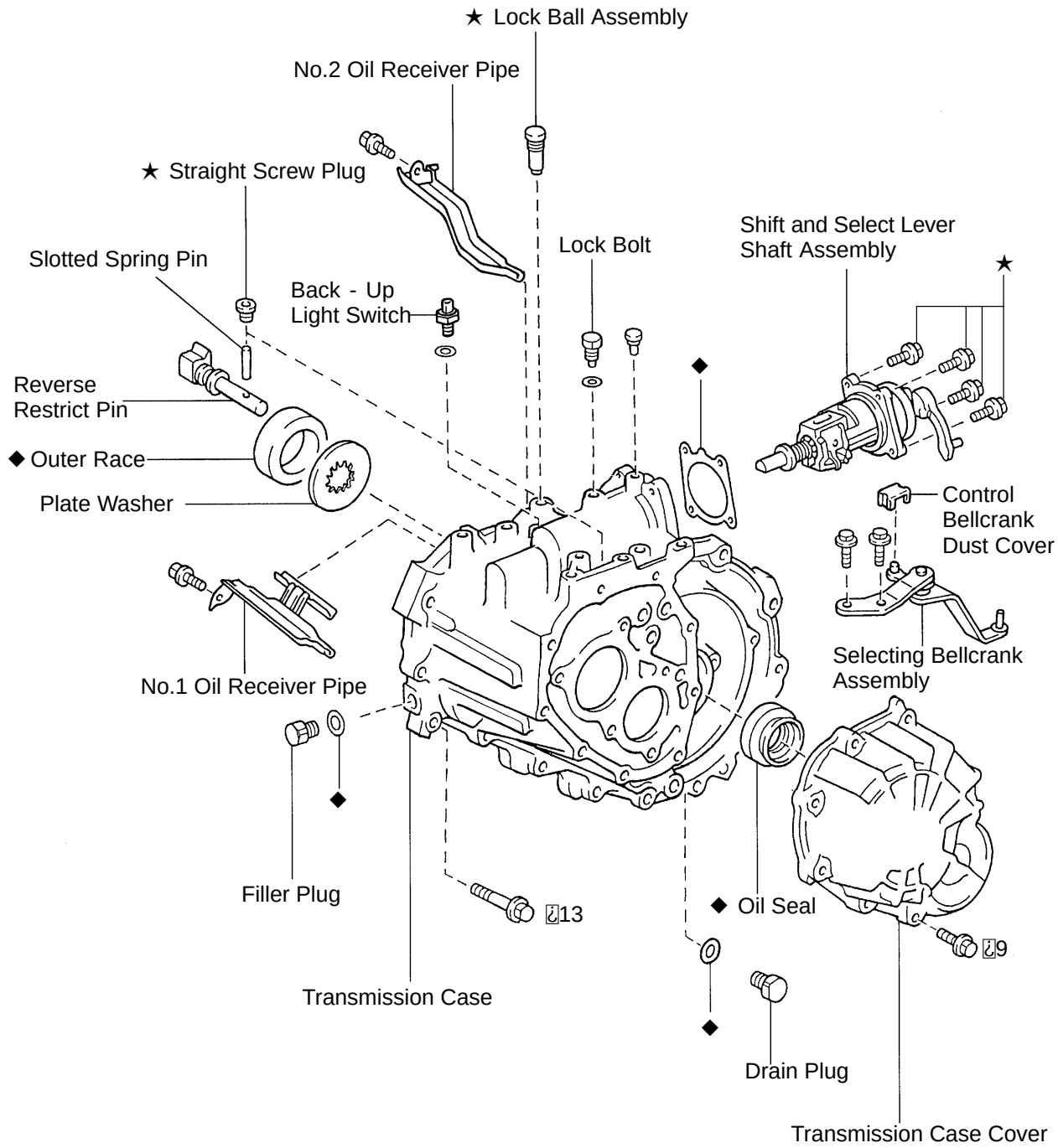

◆ Non-reusable part
★ Precoated part

Z18281

OUTPUT SHAFT

COMPONENTS

MX0BQ-01

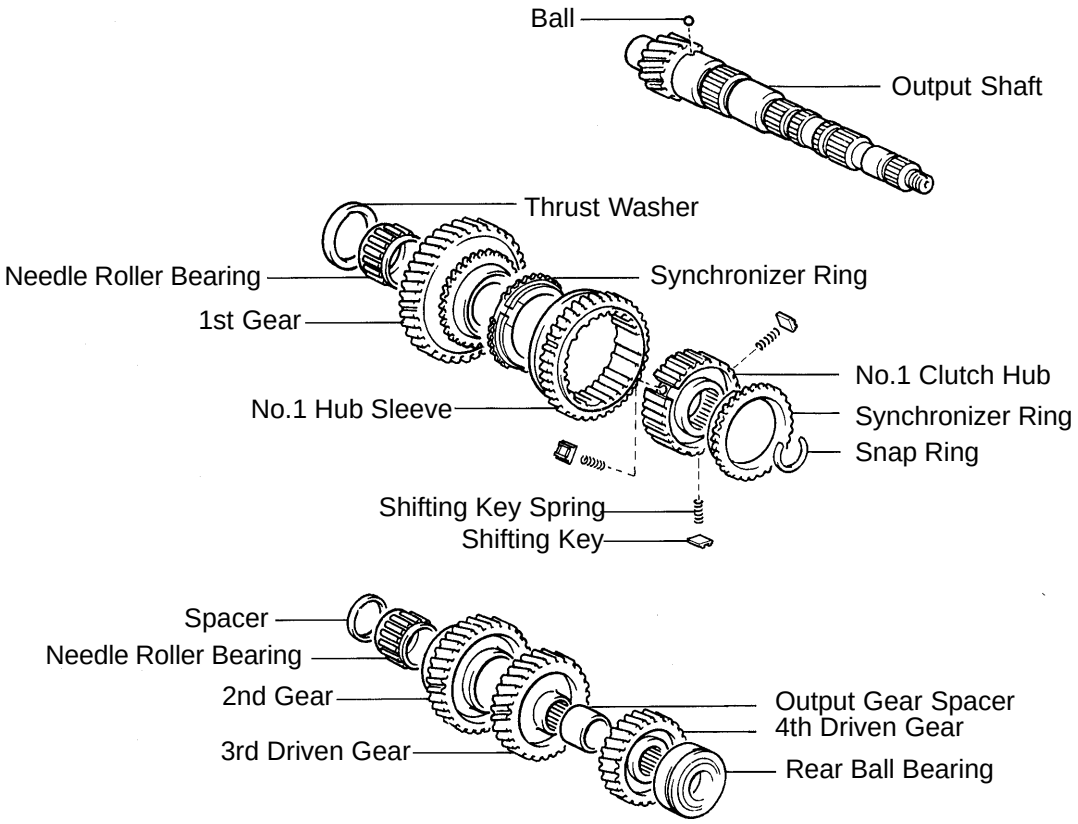

Q07853

SHIFT LEVER AND CONTROL CABLE

COMPONENTS

MX0BY-01

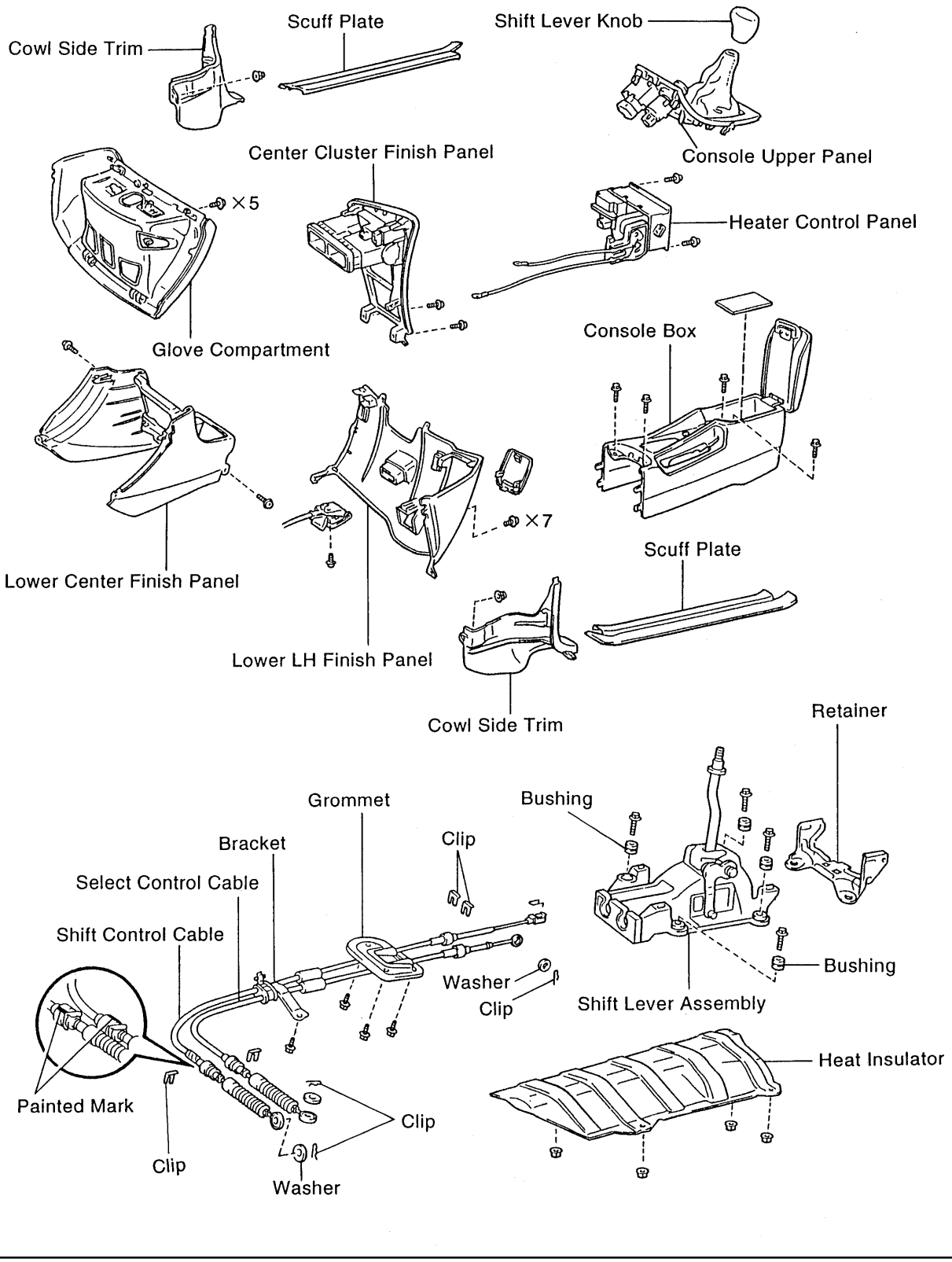

CLUTCH MASTER CYLINDER

COMPONENTS

CL067-03

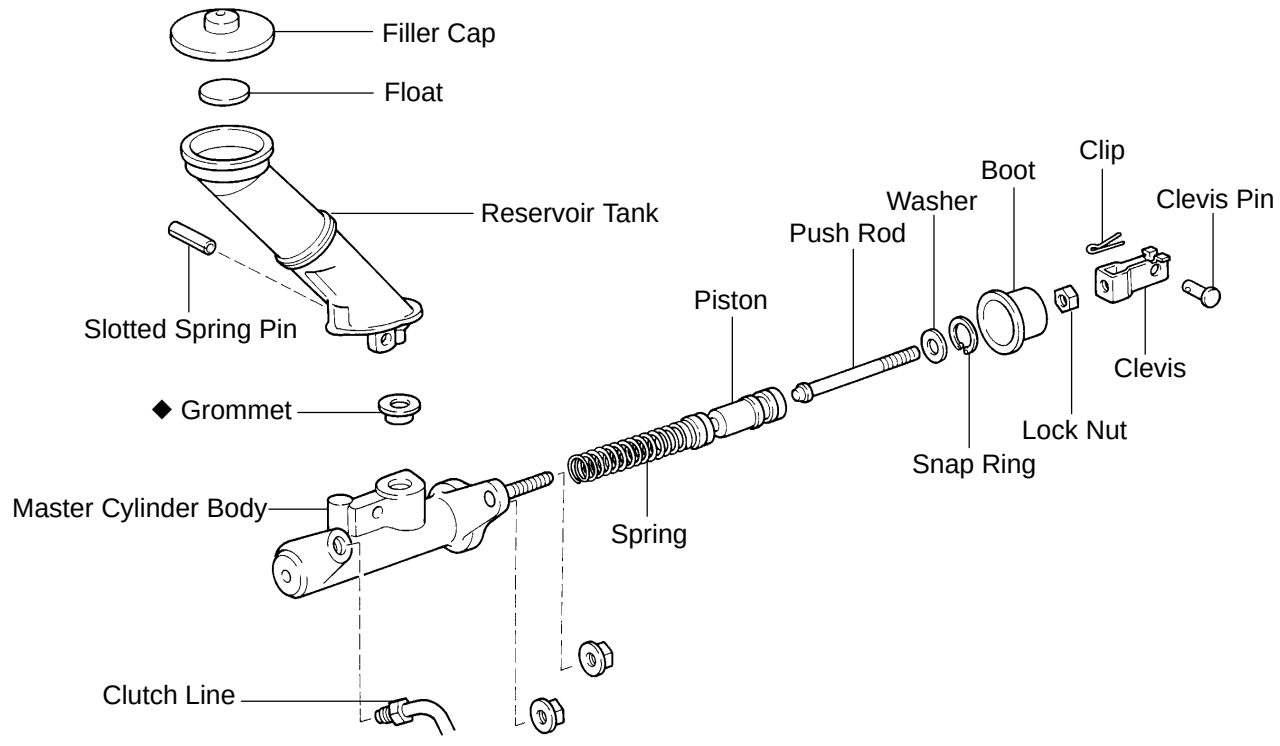

◆ Non-reusable part

D03179

FRONT AXLE HUB

SA12H-02

COMPONENTS

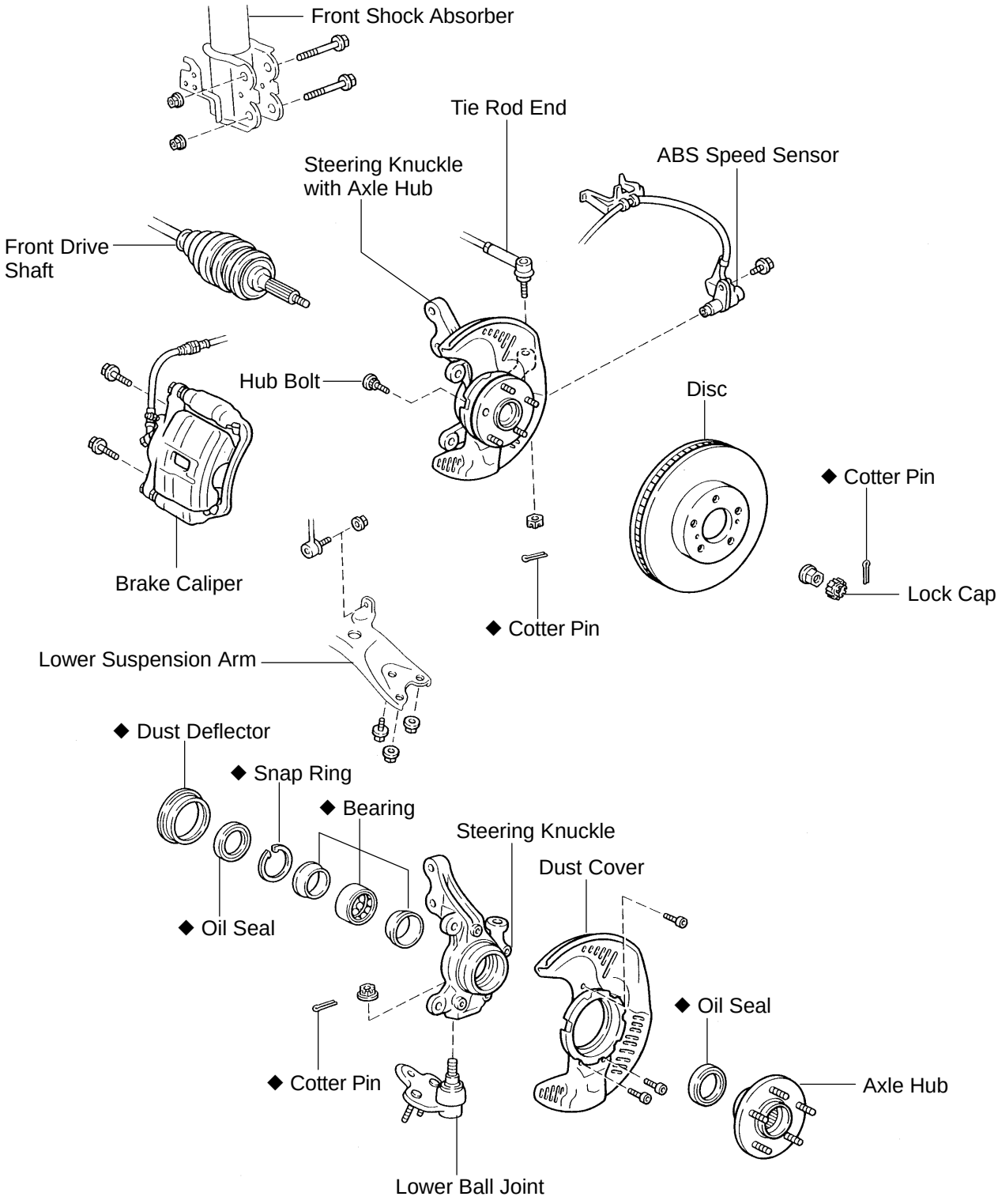

◆ Non-reusable part

F05078

FRONT BUMPER

COMPONENTS

BO1DG-06

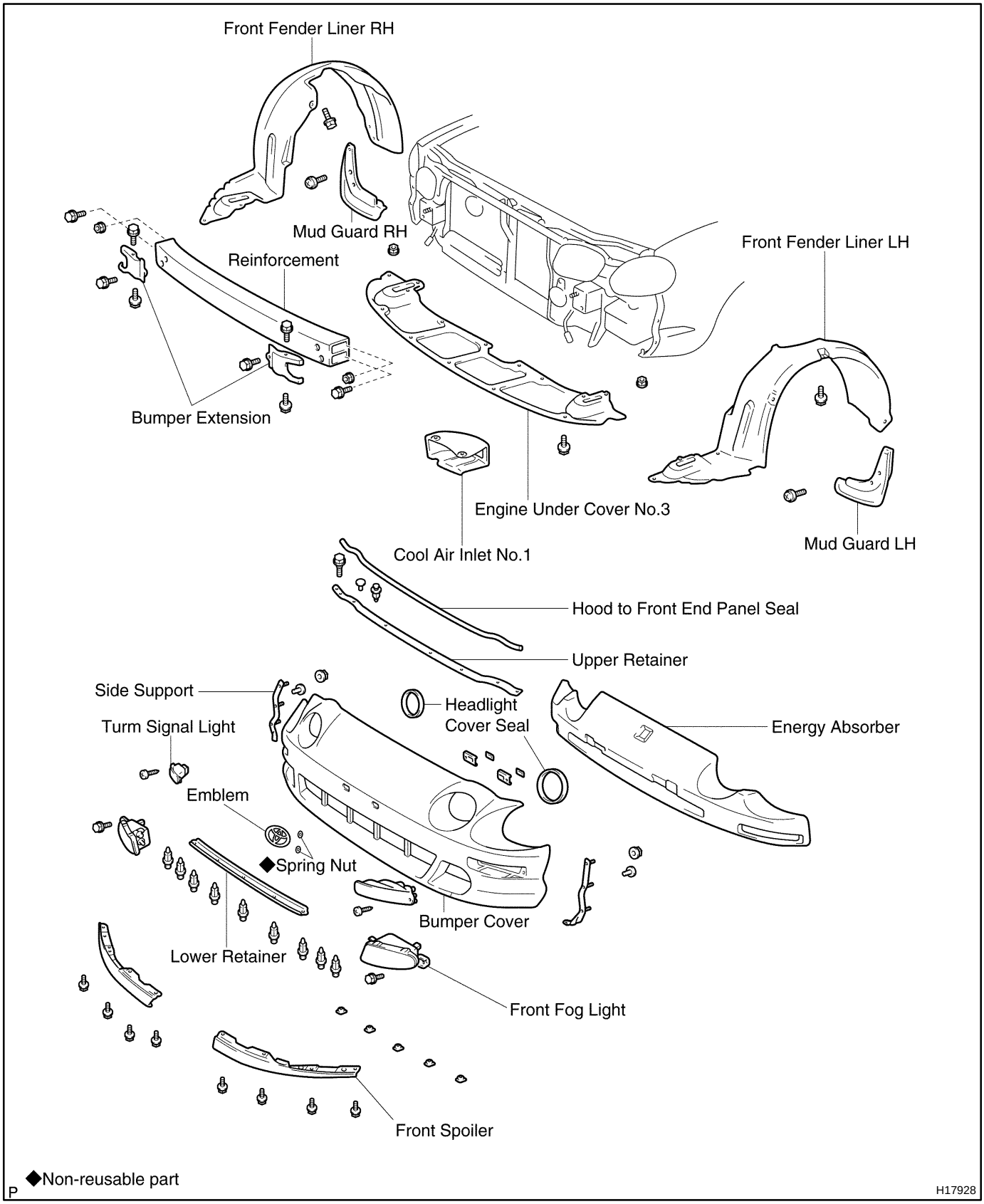

FRONT DOOR

COMPONENTS

BO1DJ-06

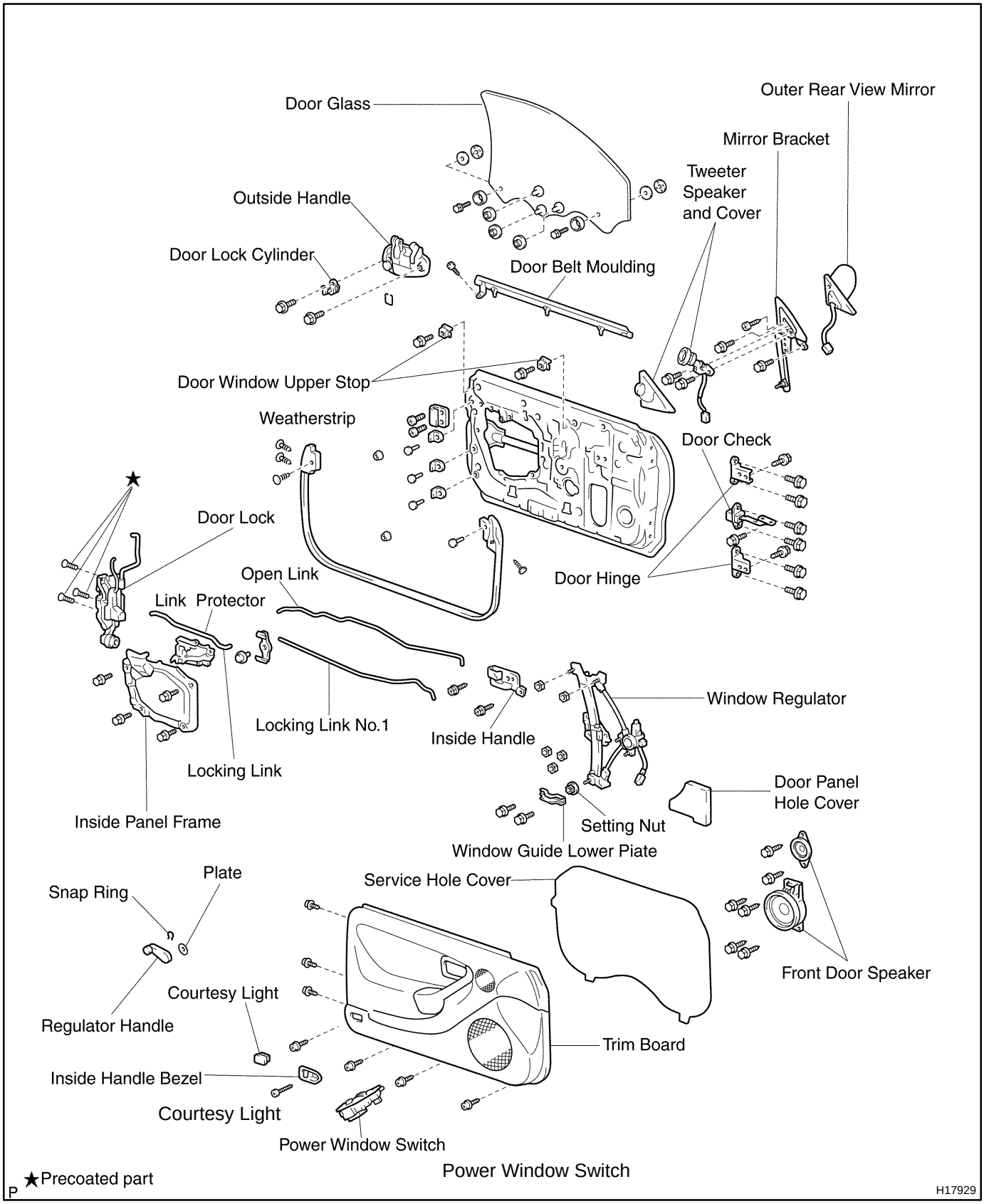

FRONT LOWER BALL JOINT

COMPONENTS

SA135-02

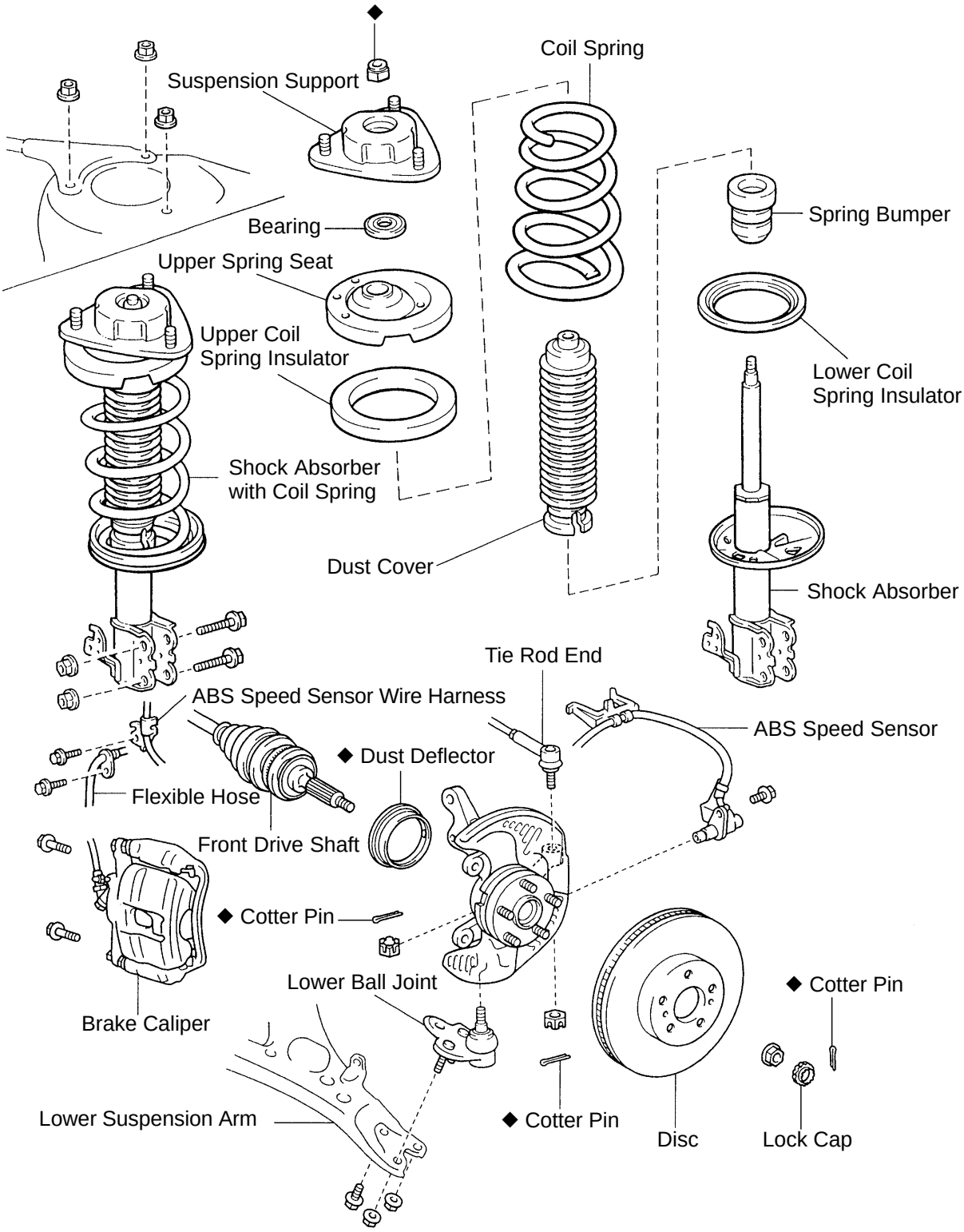

◆ Non-reusable part

W00909

FRONT LOWER SUSPENSION ARM

SA12Z-02

COMPONENTS

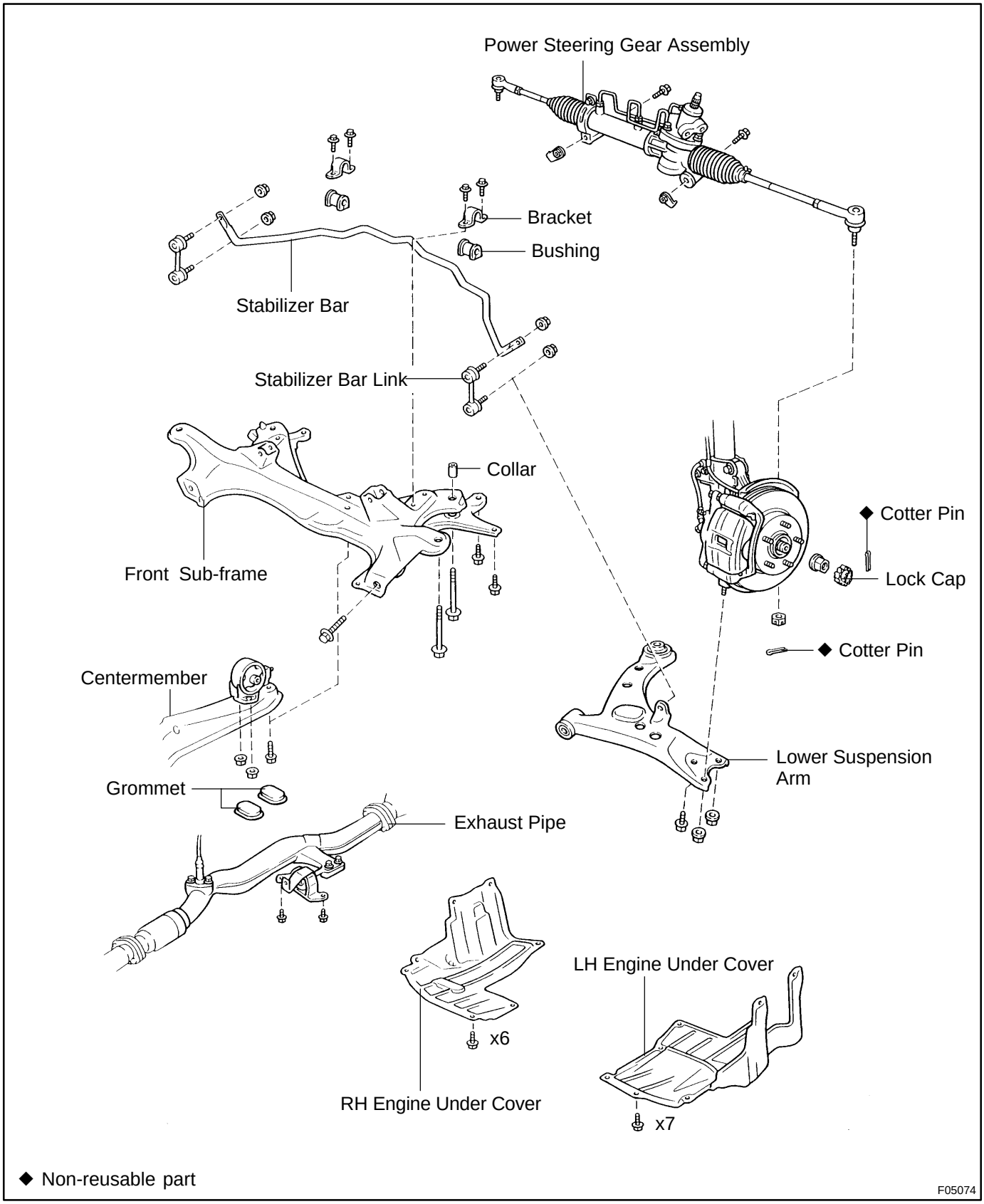

FRONT SHOCK ABSORBER

SA12S-02

COMPONENTS

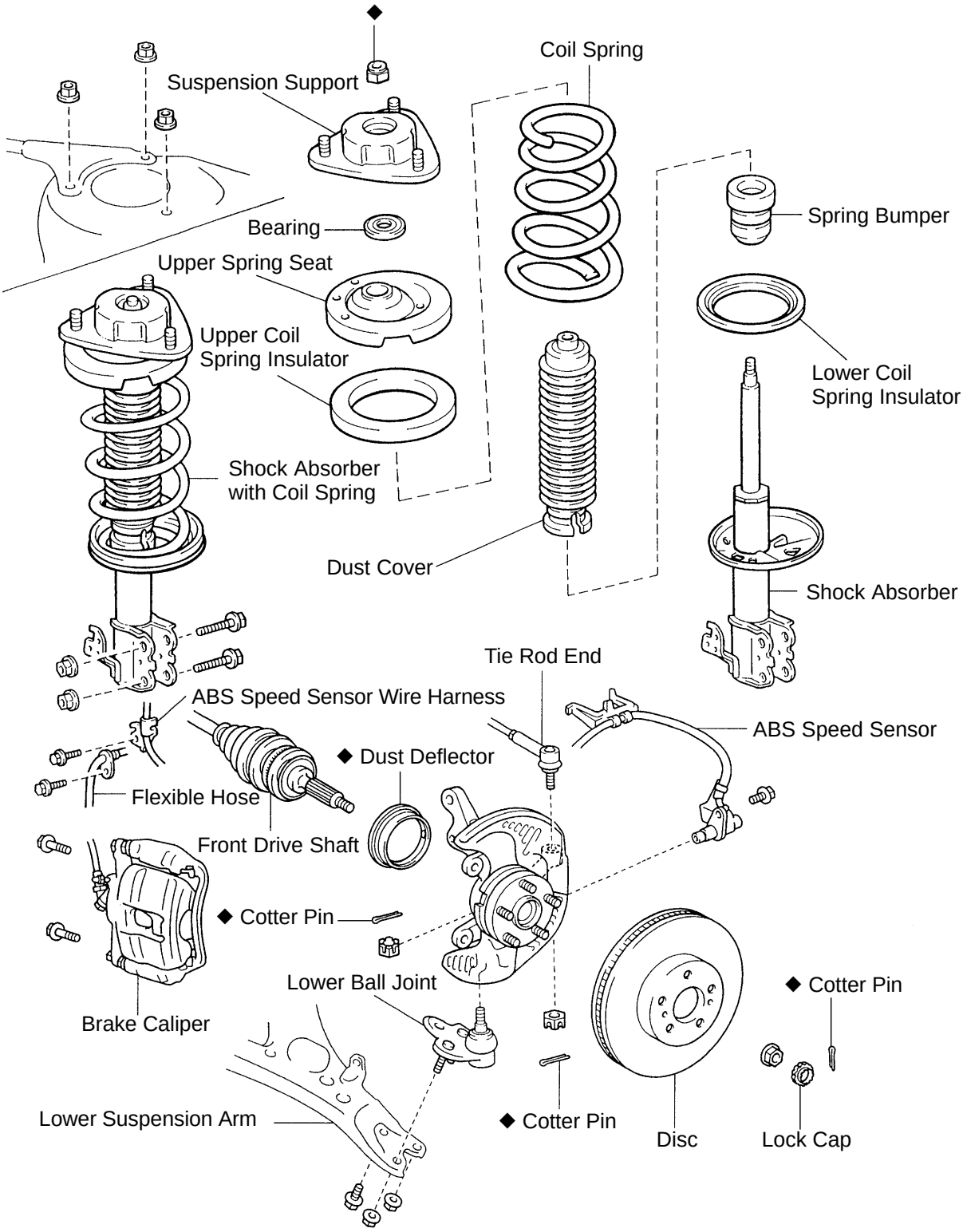

◆ Non-reusable part

W00909

FRONT STABILIZER BAR

SA136-02

COMPONENTS

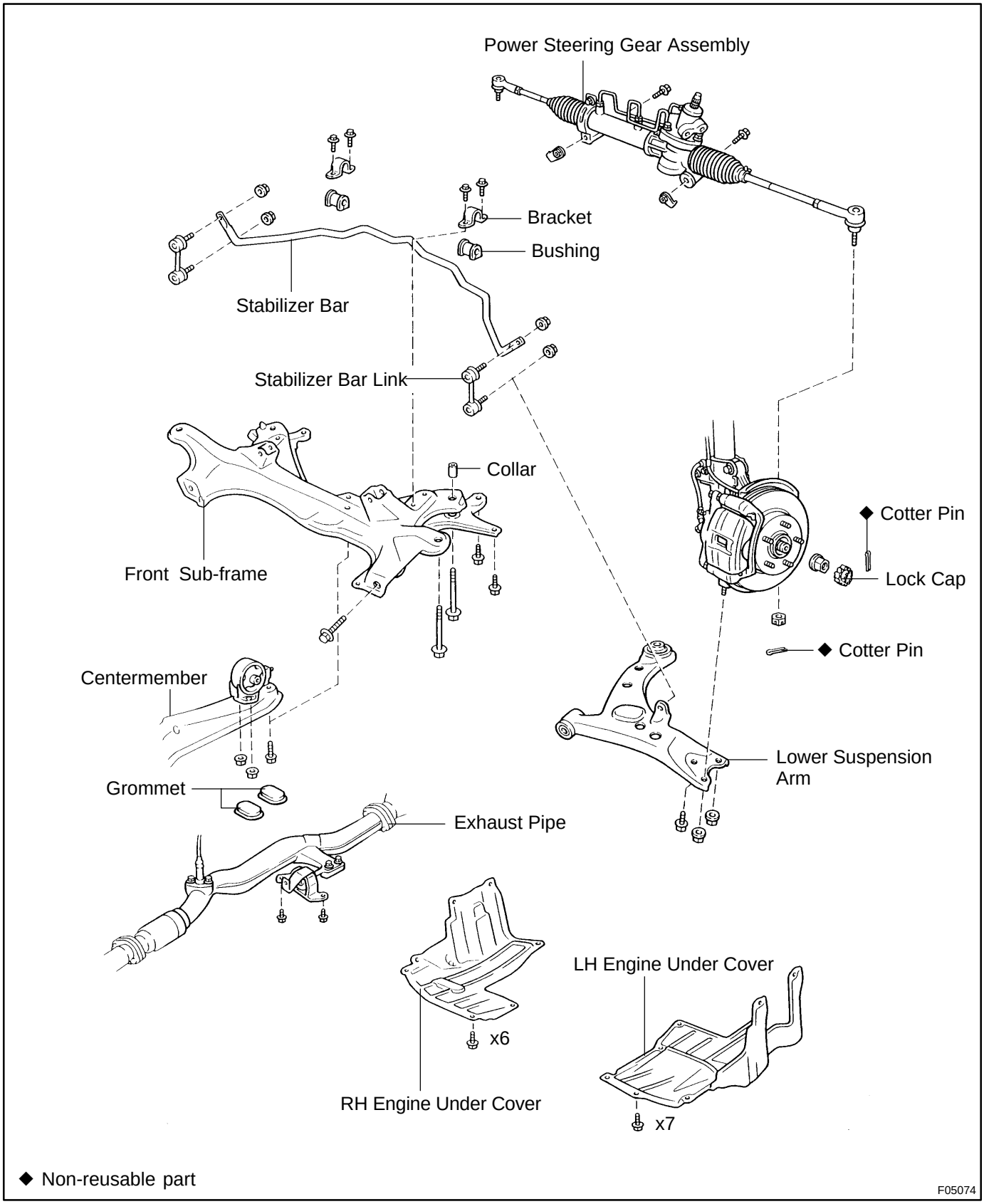

FRONT WIPER AND WASHER

BO1DT-06

COMPONENTS

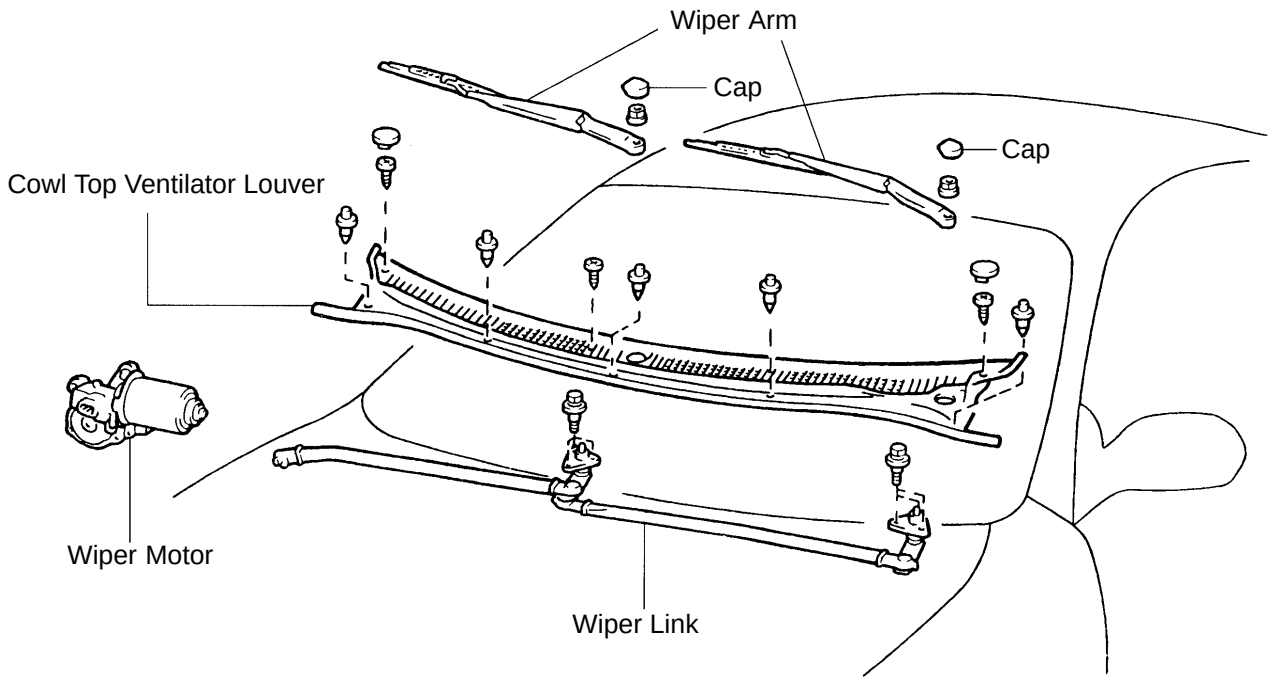

Z18151

POWER STEERING GEAR

COMPONENTS

SR0K7-04

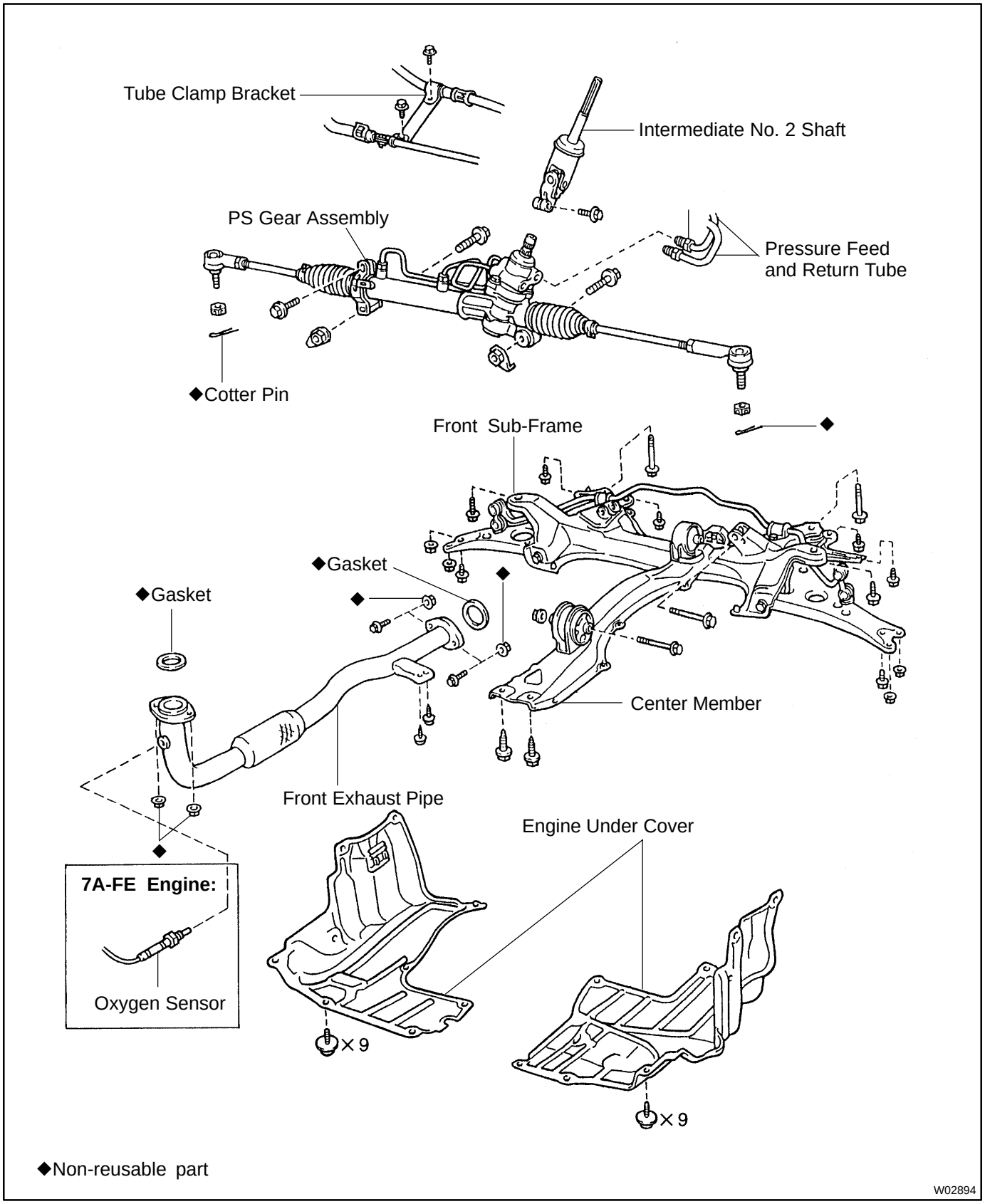

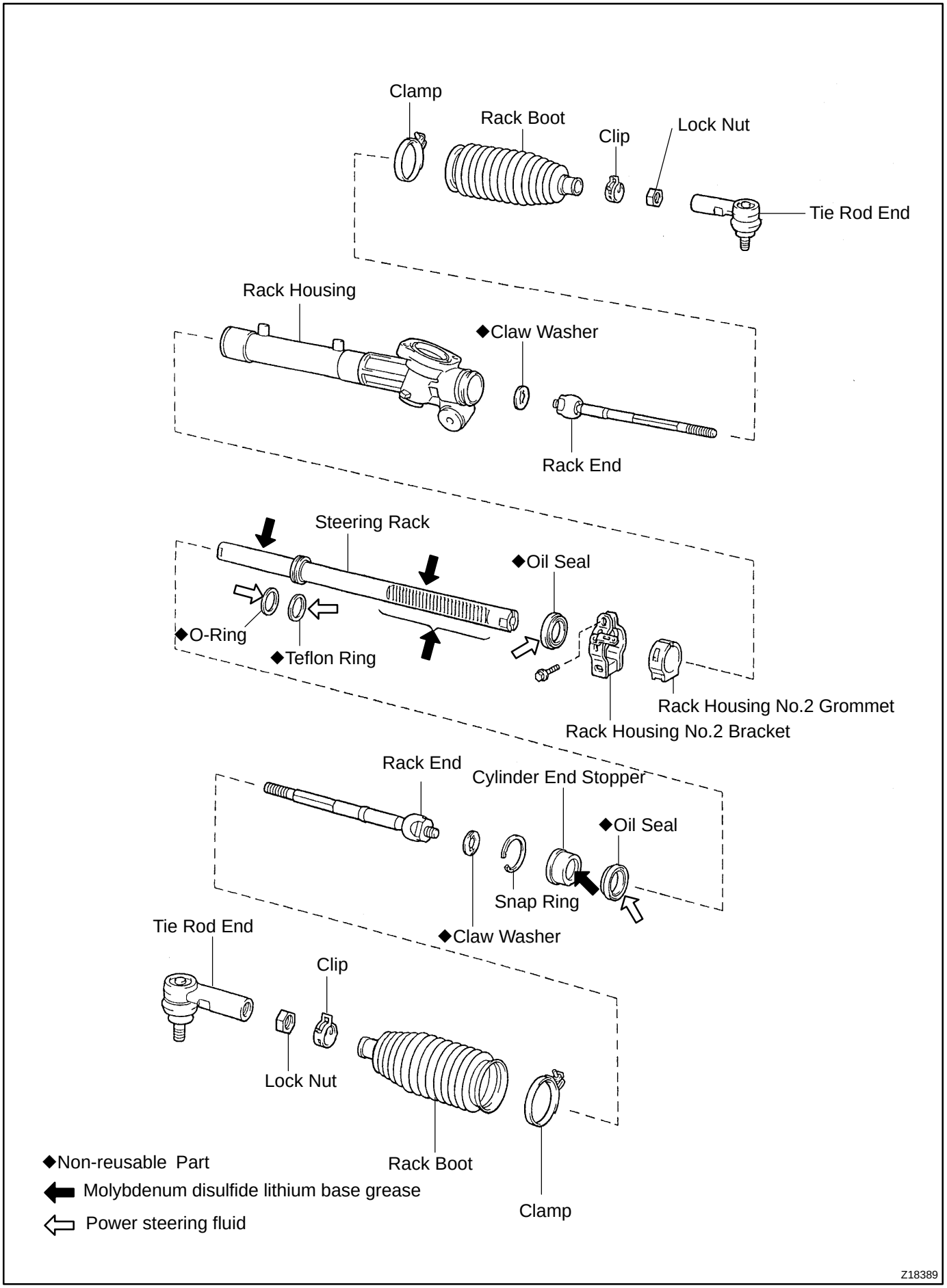
Clamp
Rack Boot
Clip
Lock Nut
Tie Rod End
Rack Housing
◆Claw Washer
Rack End
Steering Rack
◆Oil Seal
◆O-Ring
◆Teflon Ring
Rack Housing No.2 Grommet
Rack Housing No.2 Bracket
Rack End
Cylinder End Stopper
◆Oil Seal
Snap Ring
◆Claw Washer
Tie Rod End
Clip
Lock Nut
Rack Boot
Clamp
◆Non-reusable Part
Molybdenum disulfide lithium base grease
Power steering fluid
Z18389

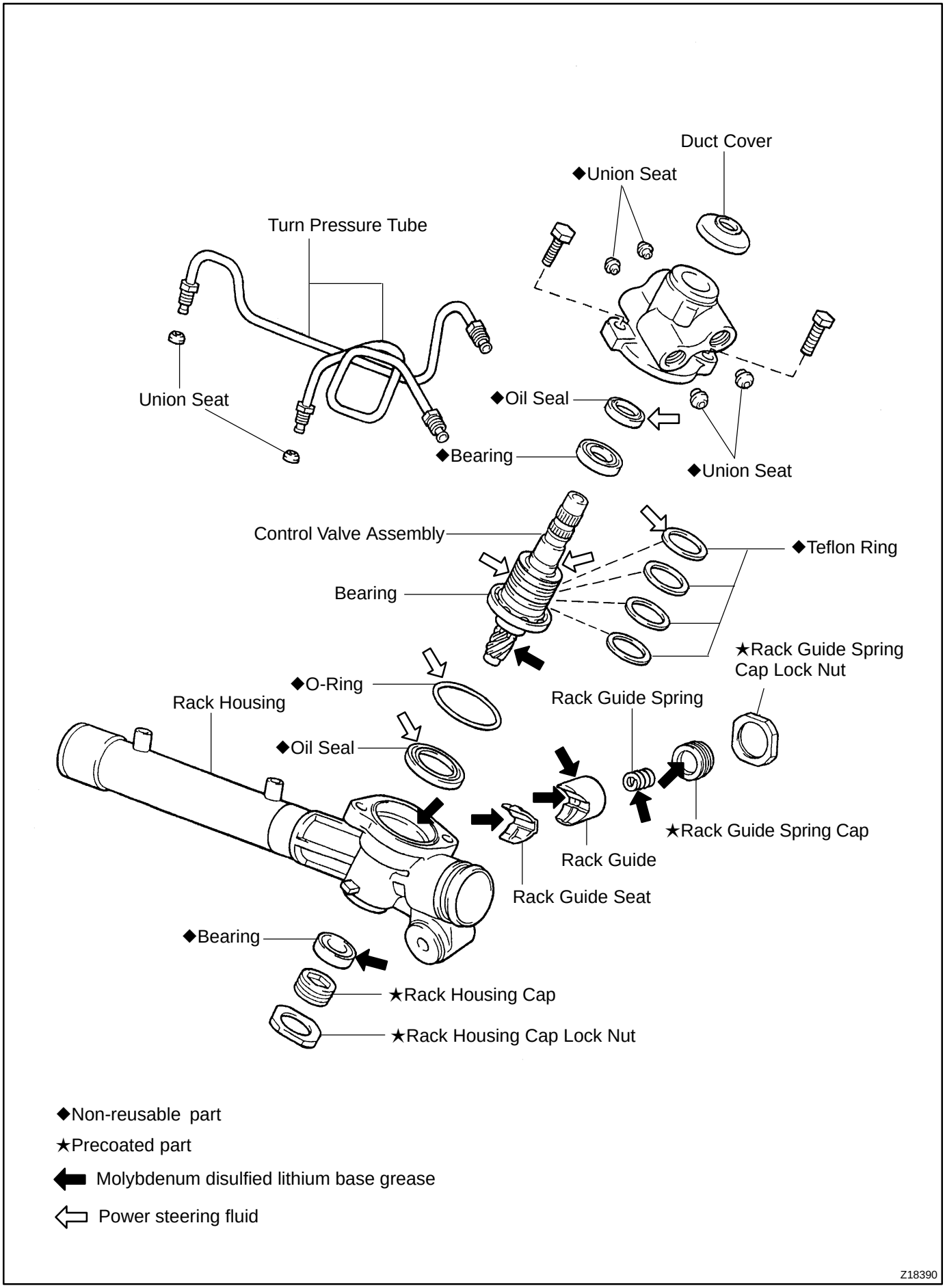
Duct Cover
◆Union Seat
Turn Pressure Tube
Union Seat
◆Oil Seal
◆Bearing
◆Union Seat
Control Valve Assembly
◆Teflon Ring
Bearing
★Rack Guide Spring Cap Lock Nut
◆O-Ring
Rack Housing
Rack Guide Spring
◆Oil Seal
★Rack Guide Spring Cap
Rack Guide
Rack Guide Seat
◆Bearing
★Rack Housing Cap
★Rack Housing Cap Lock Nut
◆Non-reusable part
★Precoated part
Molybdenum disulfied lithium base grease
Power steering fluid
Z18390

QUARTER WINDOW GLASS (Liftback)

BO1EF-03

COMPONENTS

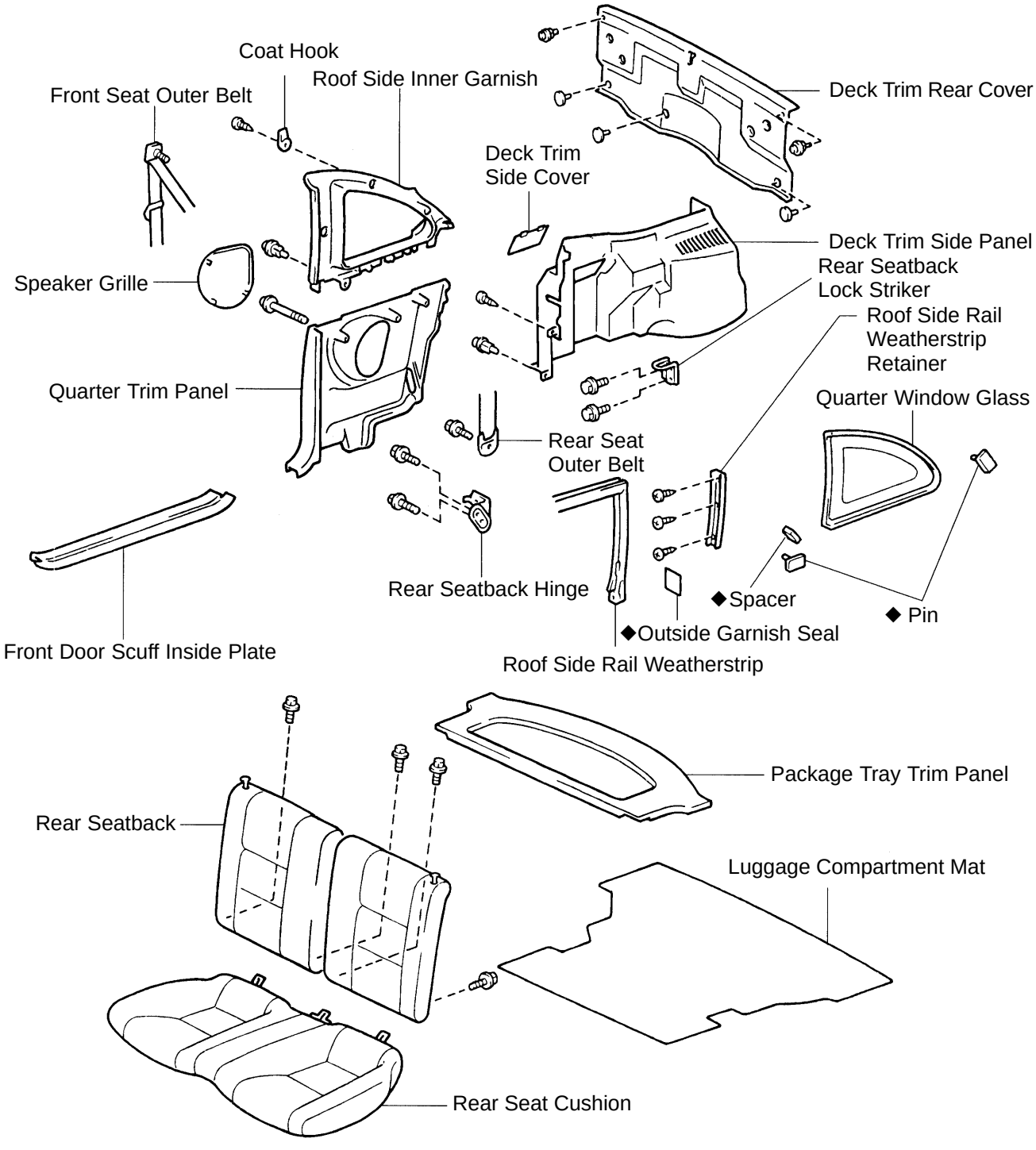

◆ Non-reusable part

N17159

REAR AXLE HUB

SA13A-02

COMPONENTS

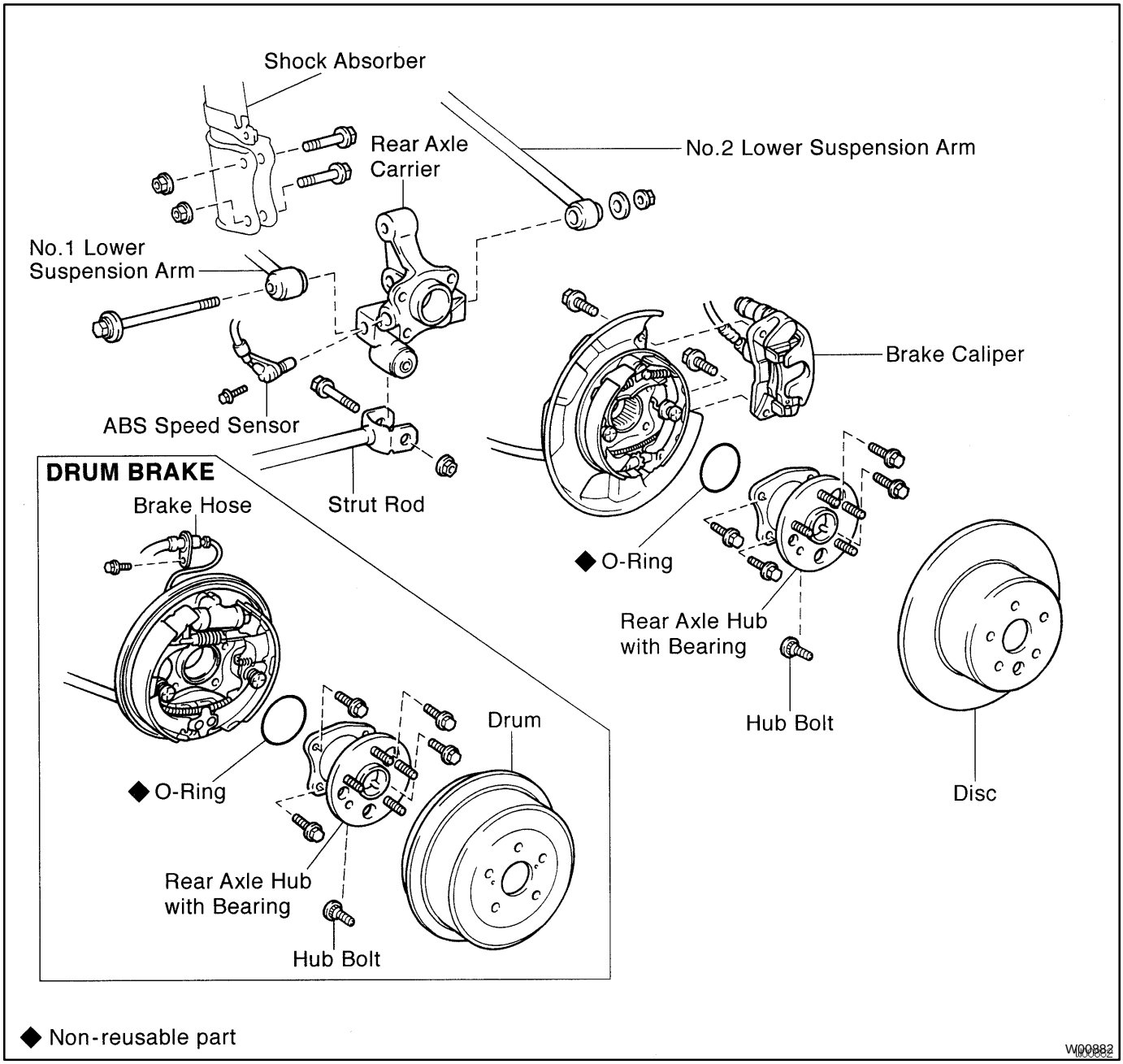

REAR BUMPER

COMPONENTS

BO1DH-05

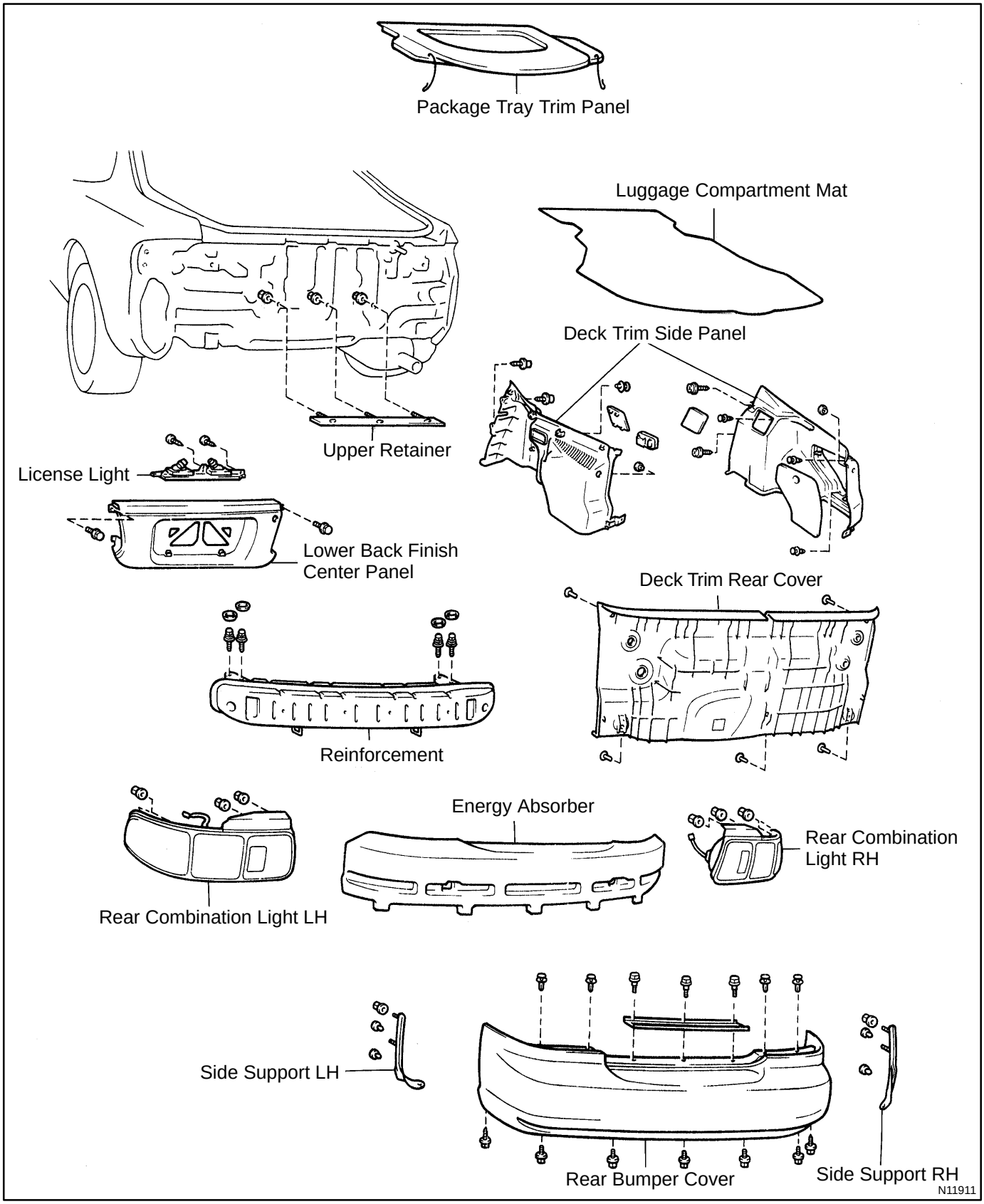

REAR LOWER SUSPENSION ARM AND STRUT ROD

SA13L-02

COMPONENTS

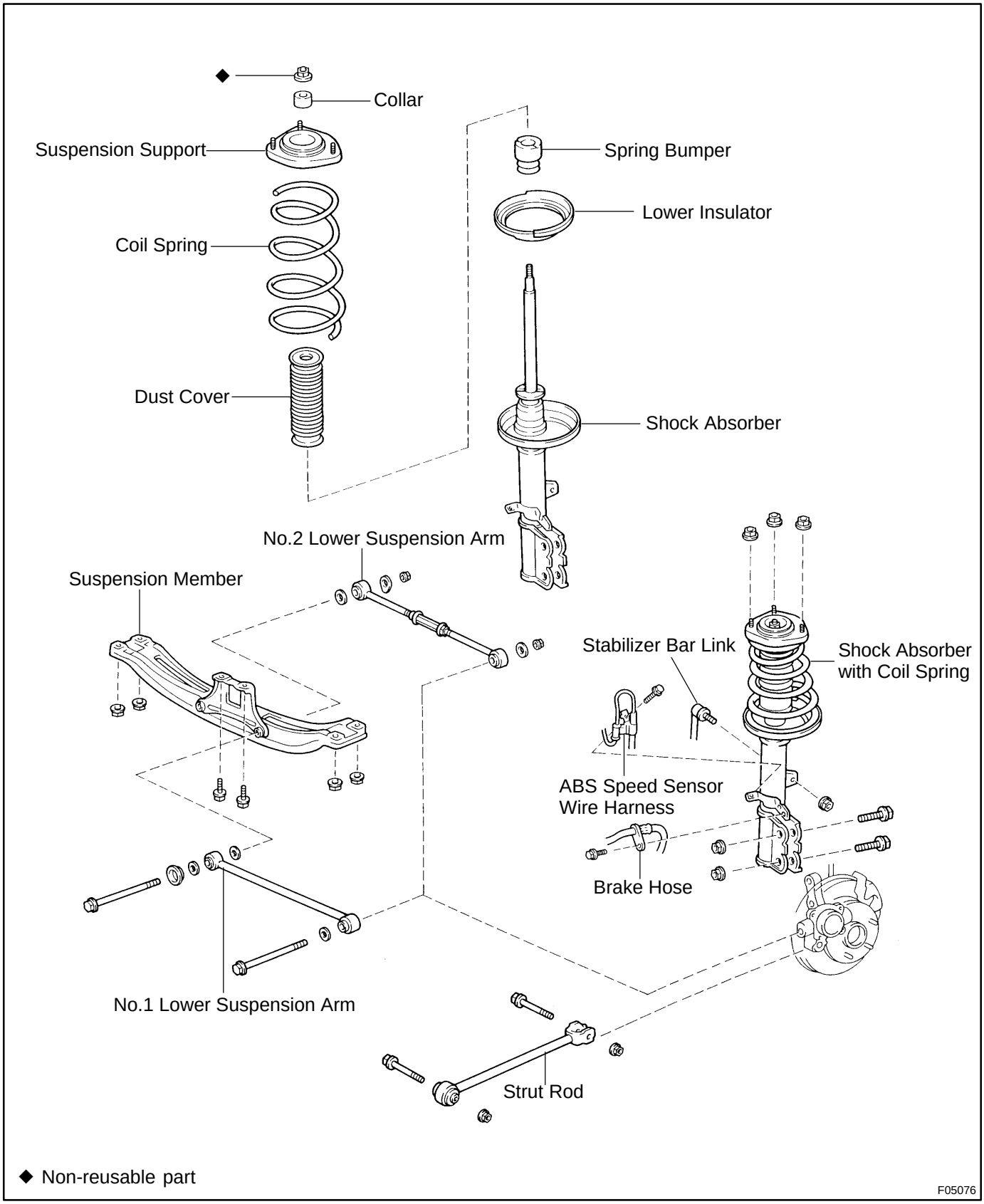

REAR SHOCK ABSORBER

SA13E-02

COMPONENTS

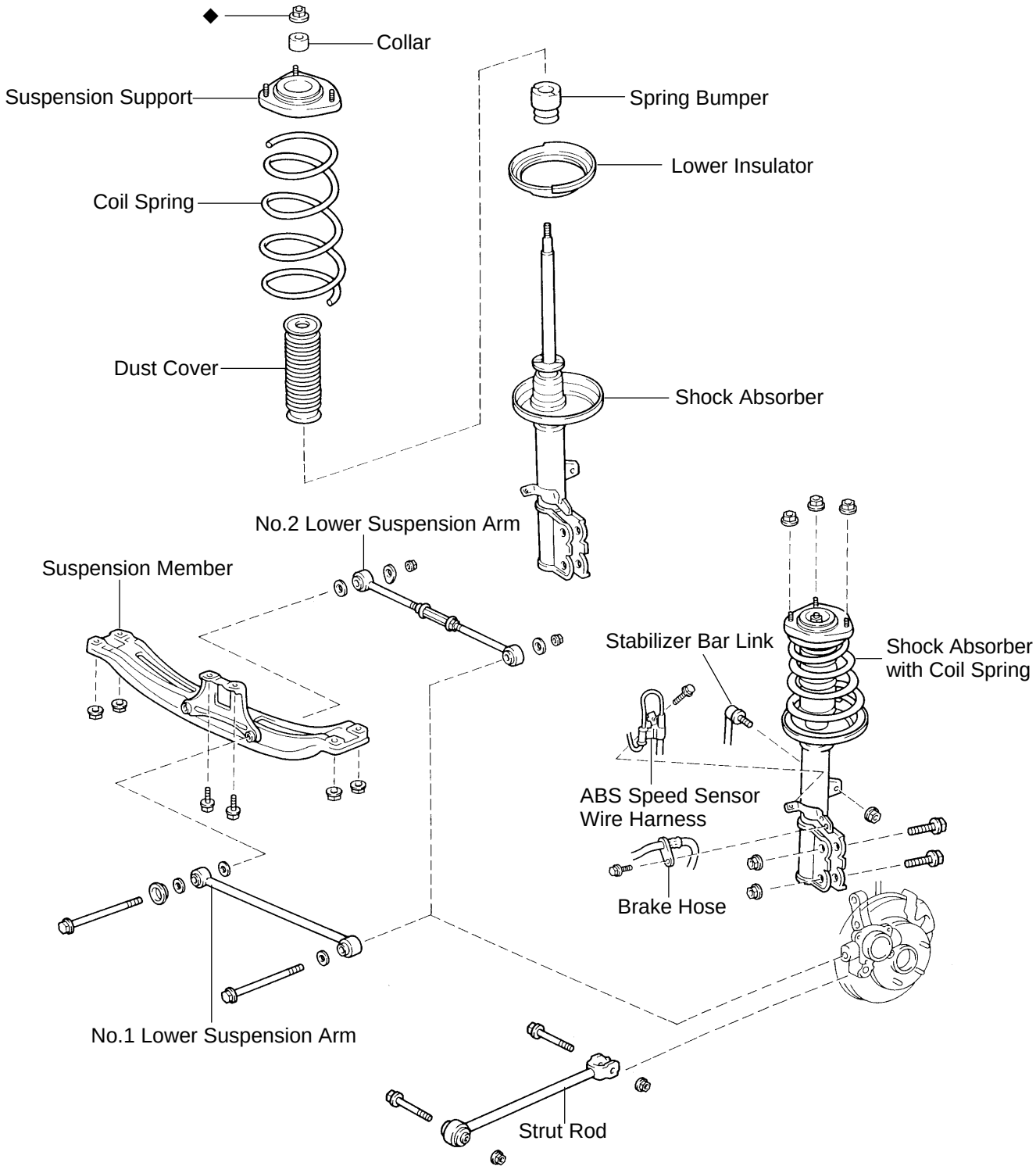

◆ Non-reusable part

F05076

REAR STABILIZER BAR

COMPONENTS

SA13Q-02

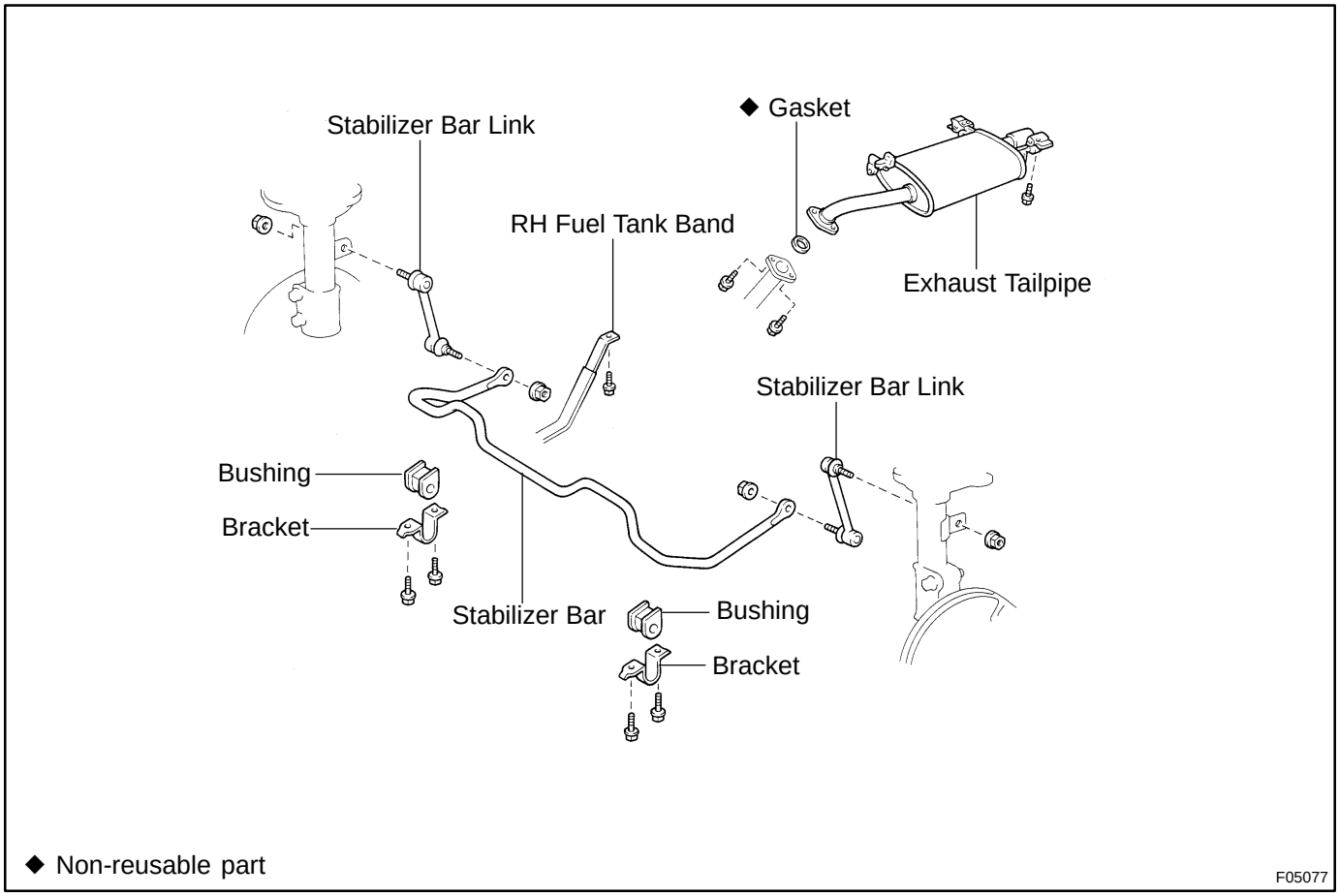

REAR WIPER AND WASHER

COMPONENTS

BO1DY-04

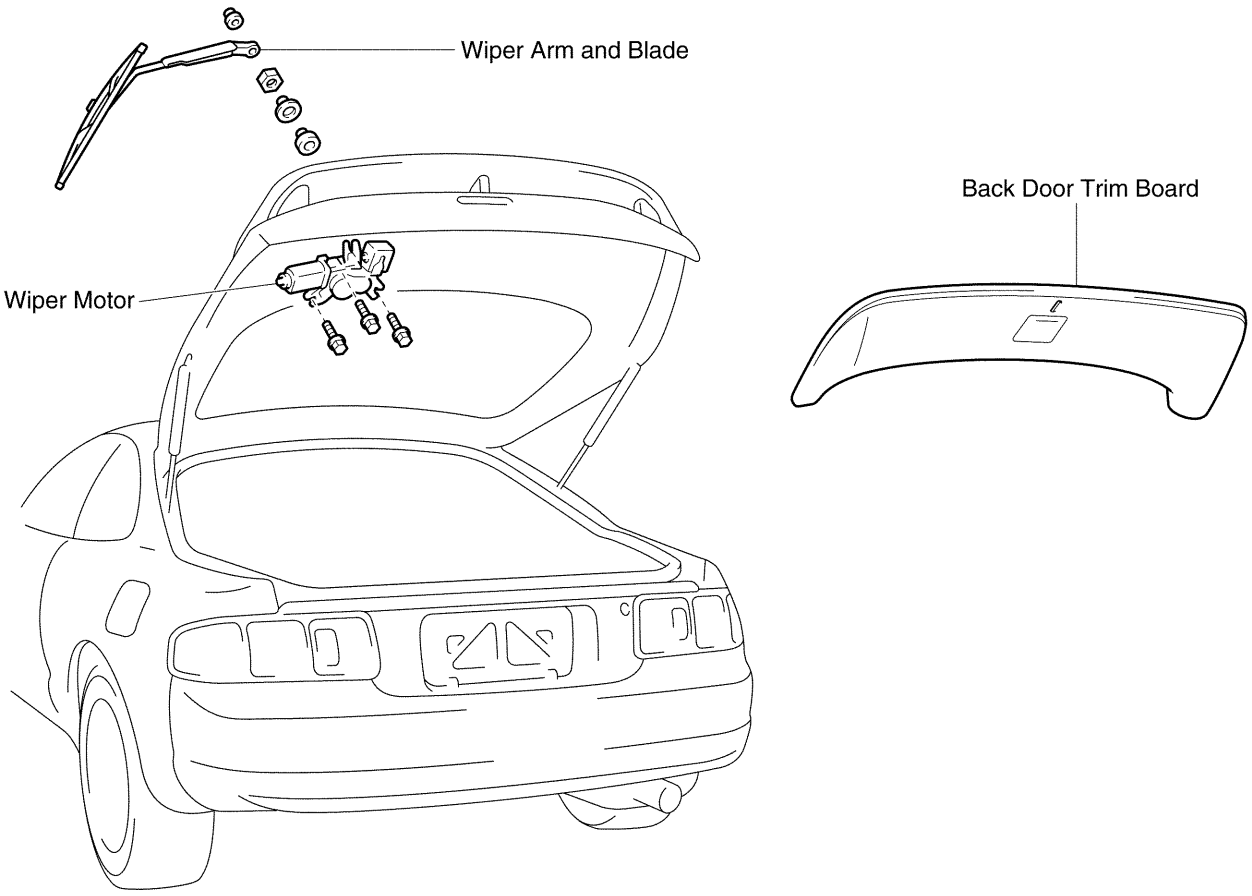

P

H17933

ROOF DRIP SIDE FINISH MOULDING

BO1E3-03

COMPONENTS

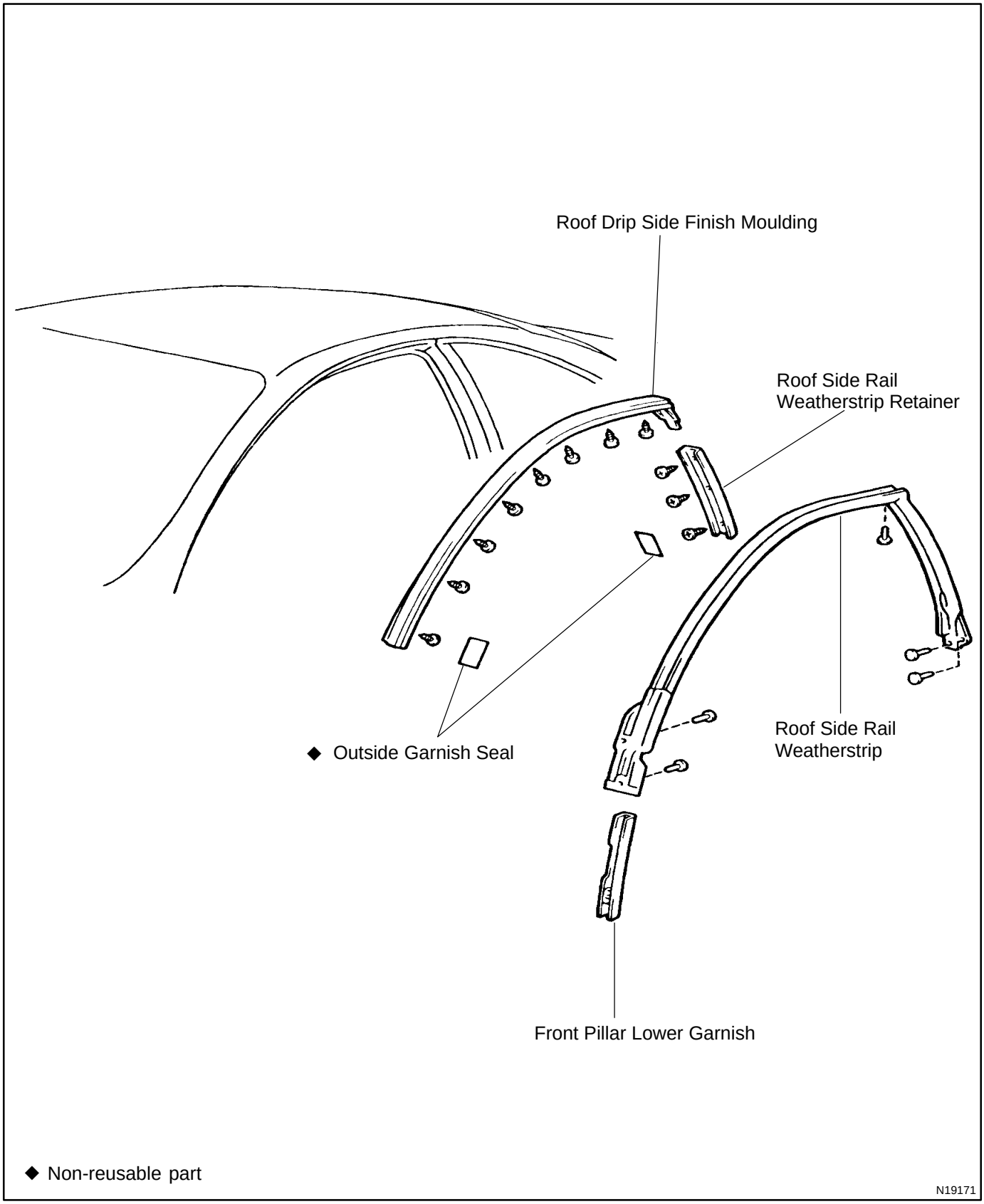

DIFFERENTIAL CASE

COMPONENTS

MX04S-07

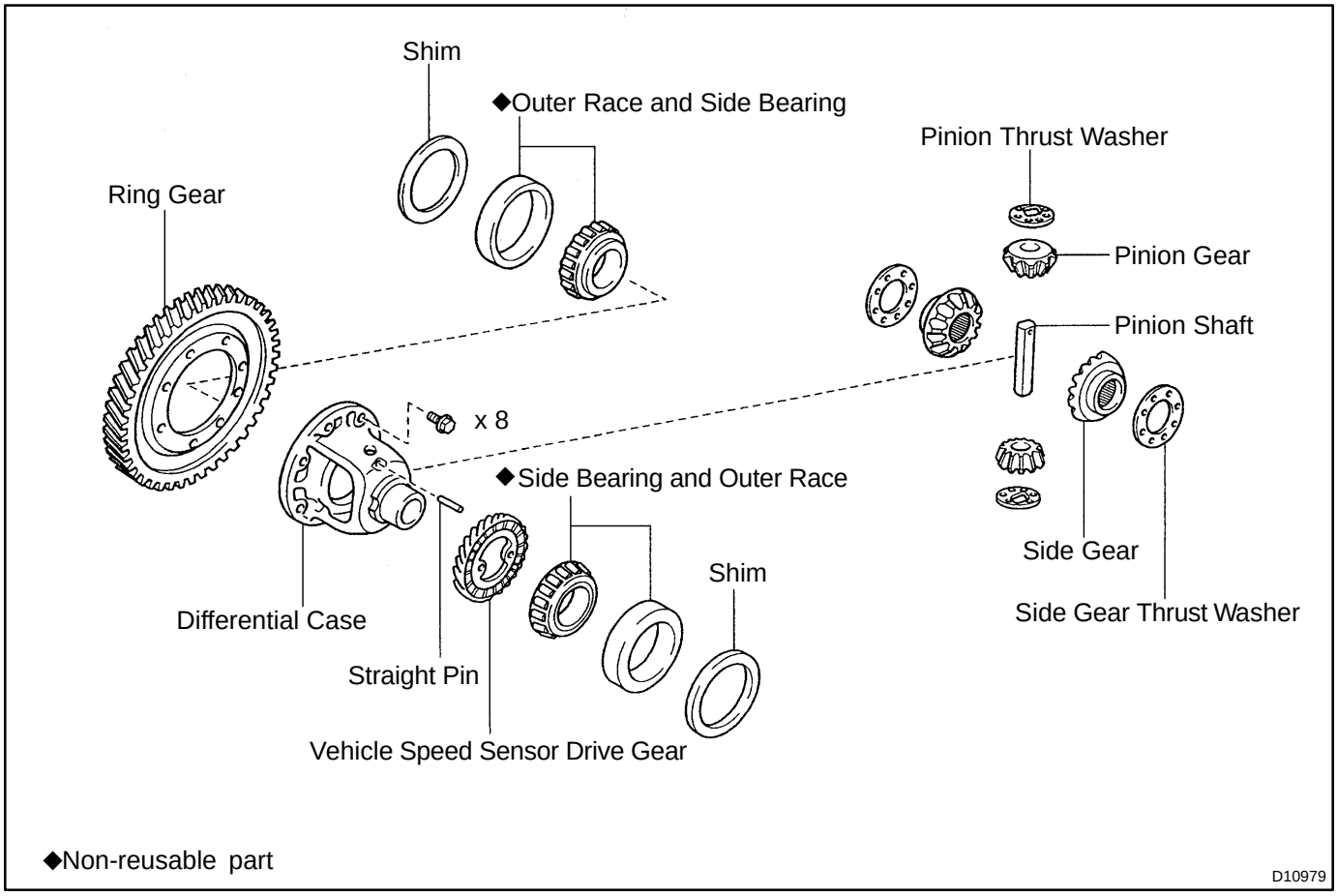

MANUAL TRANSAXLE UNIT

COMPONENTS

MX080-04

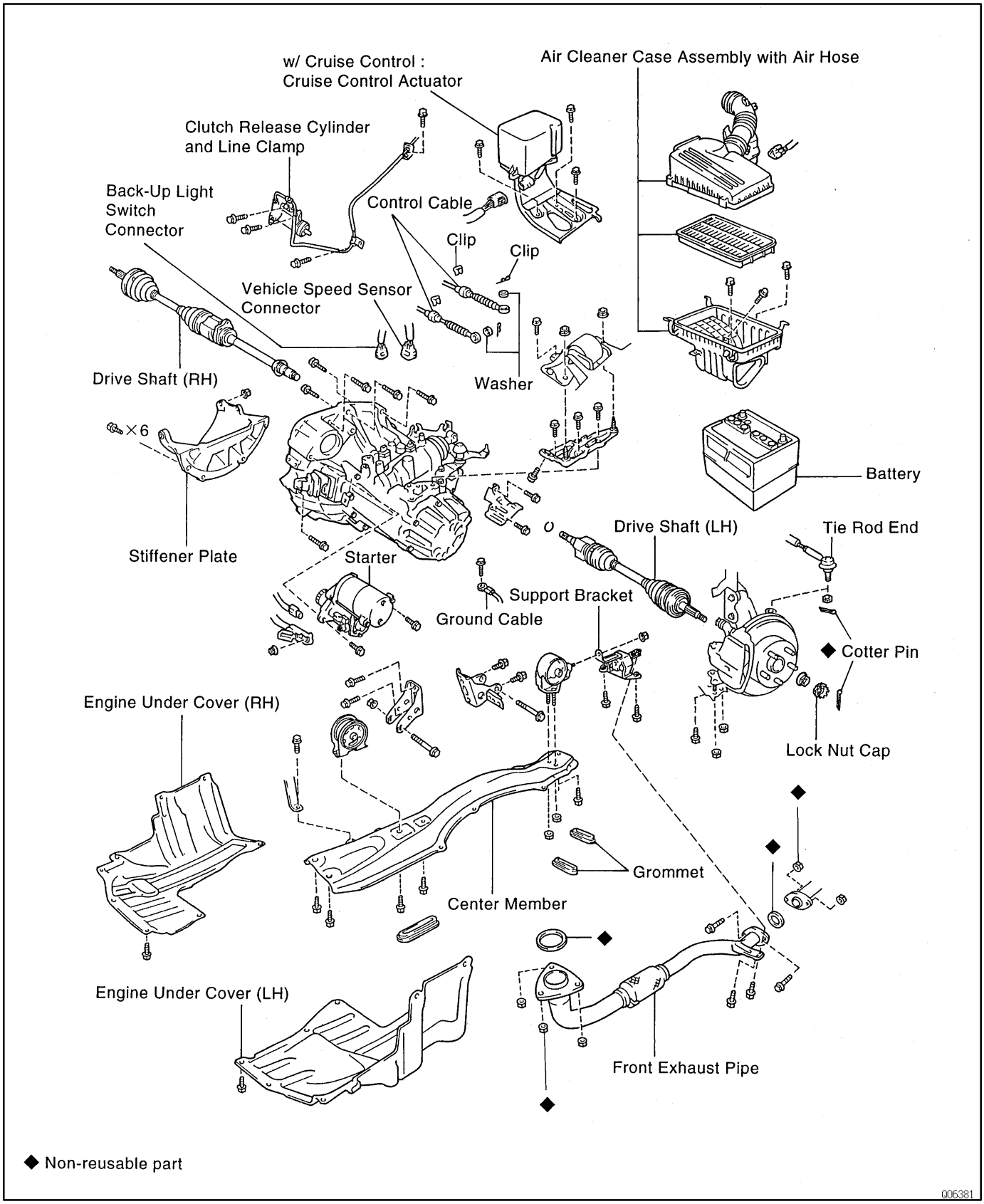

OUTPUT SHAFT

COMPONENTS

MX04N-02

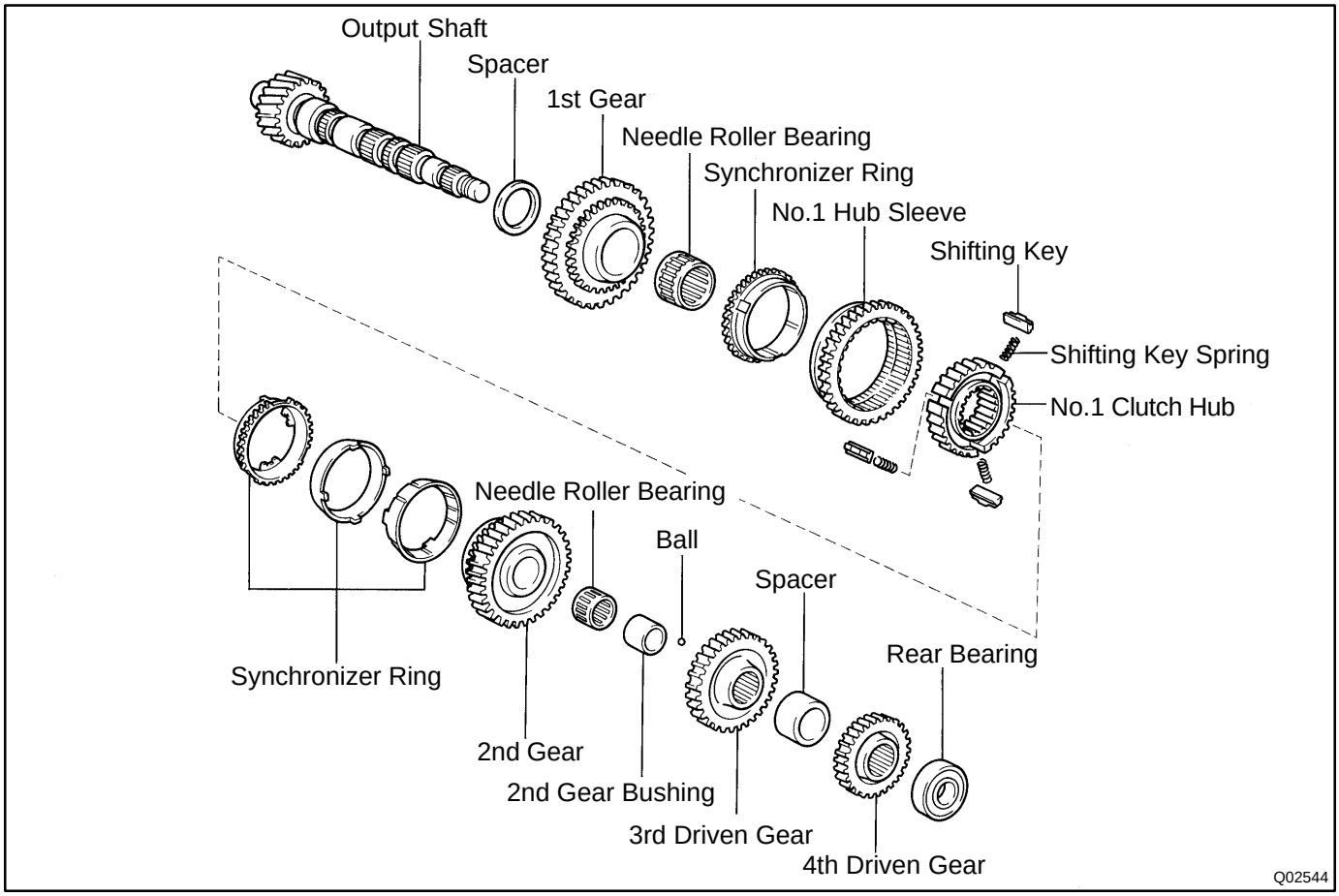

SHIFT AND SELECT LEVER SHAFT

MX04R-08

COMPONENTS

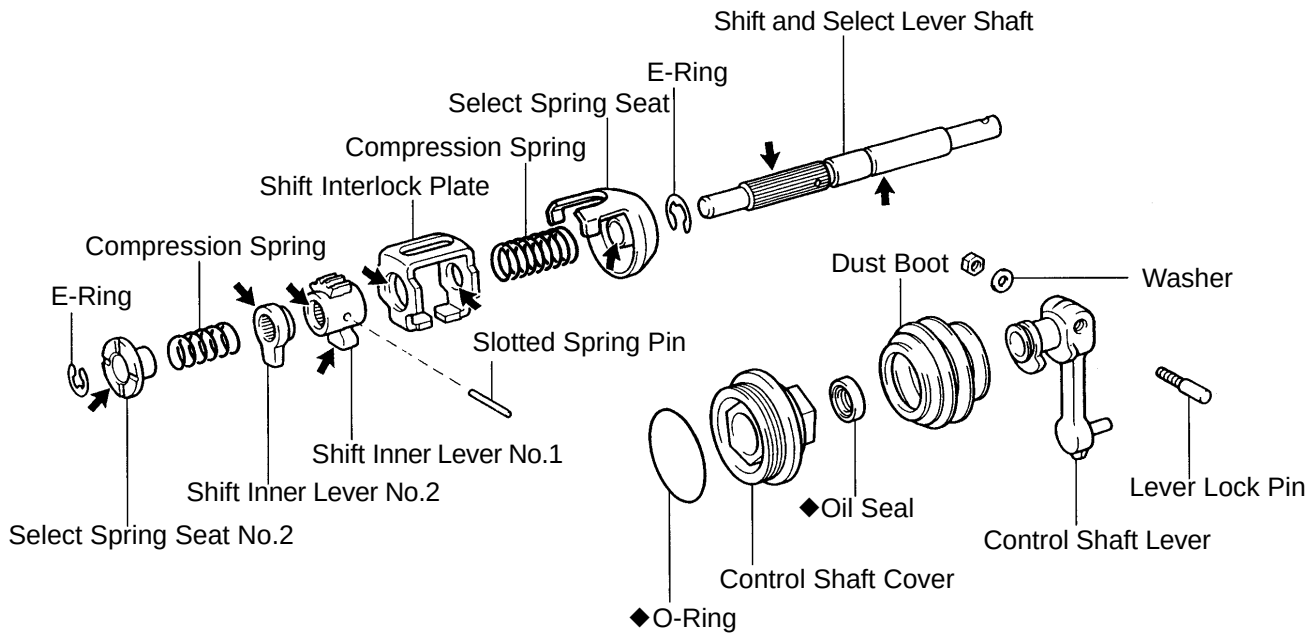

SHIFT LEVER AND CONTROL CABLE

COMPONENTS

MX084-04

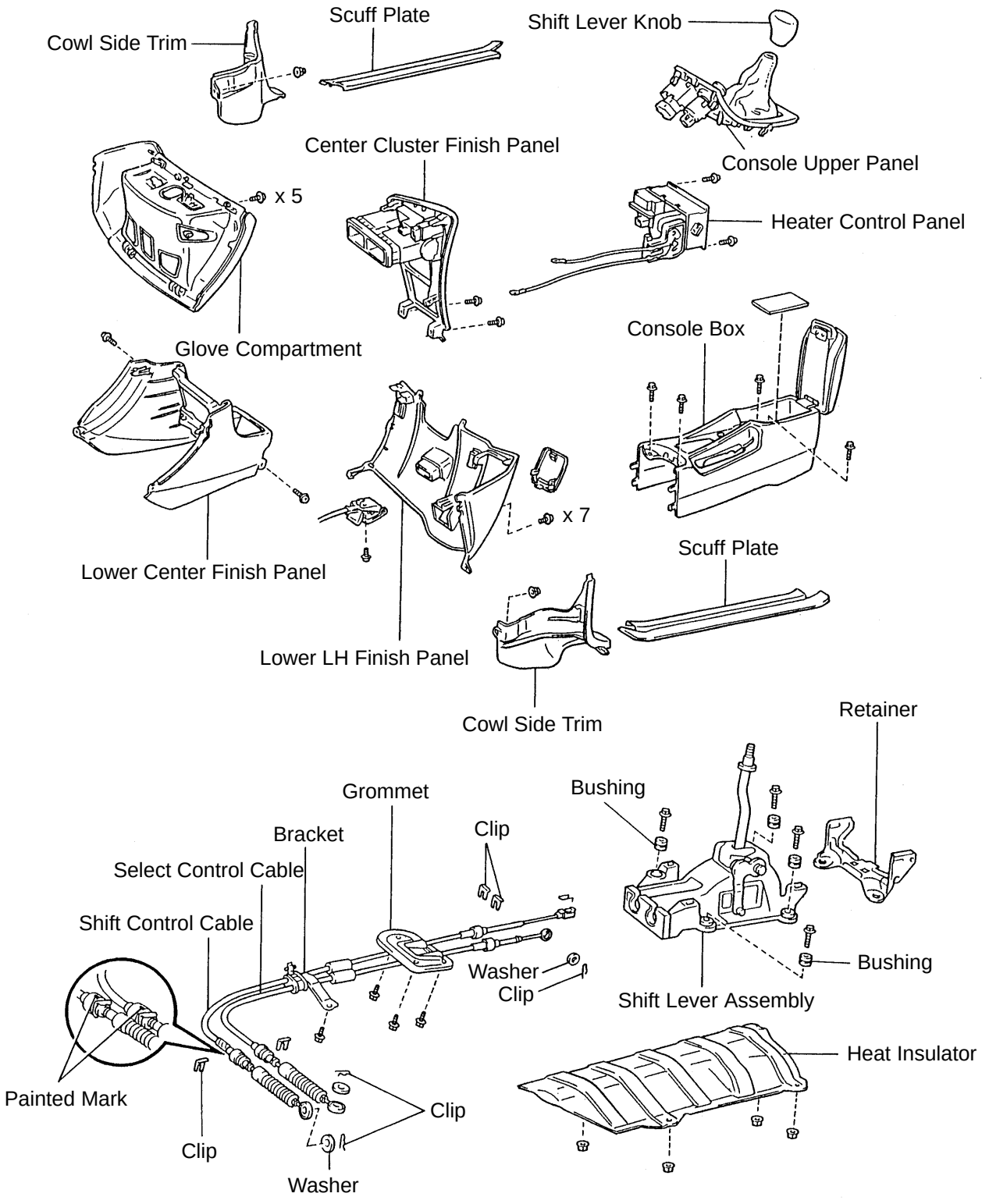

STEERING WHEEL PAD AND SPIRAL CABLE

RS02X-11

COMPONENTS

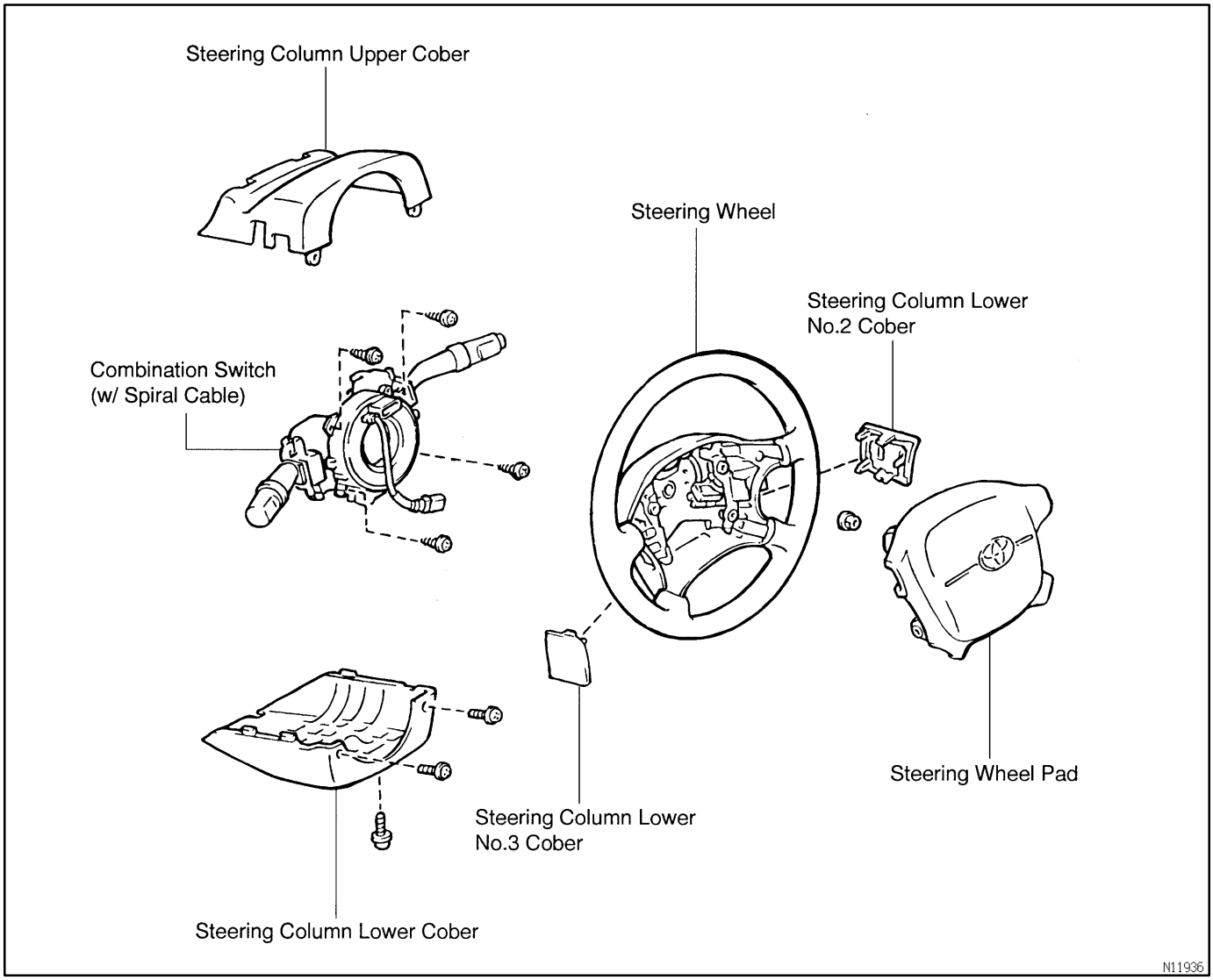

TILT STEERING COLUMN

COMPONENTS

SR0K1-04

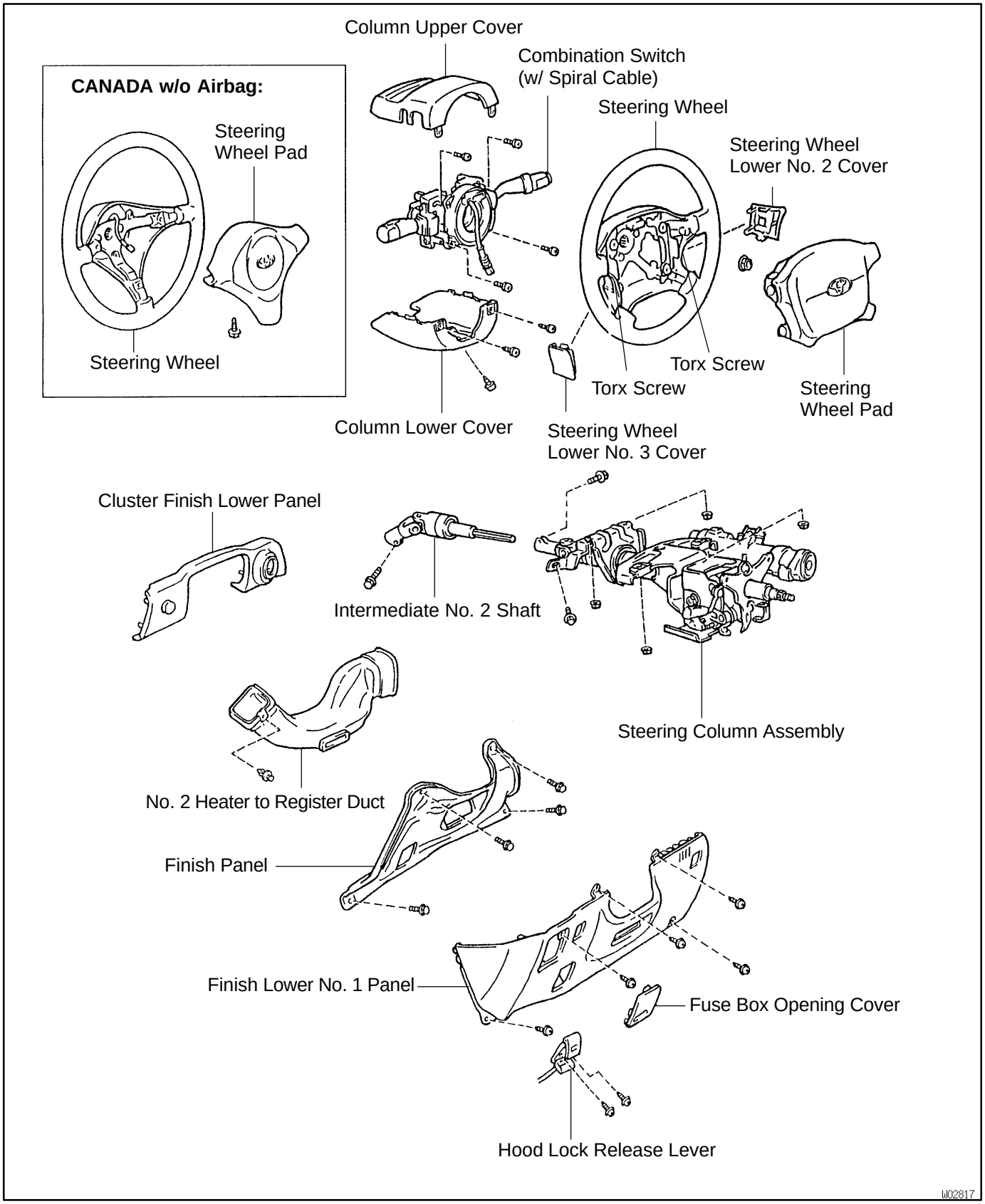

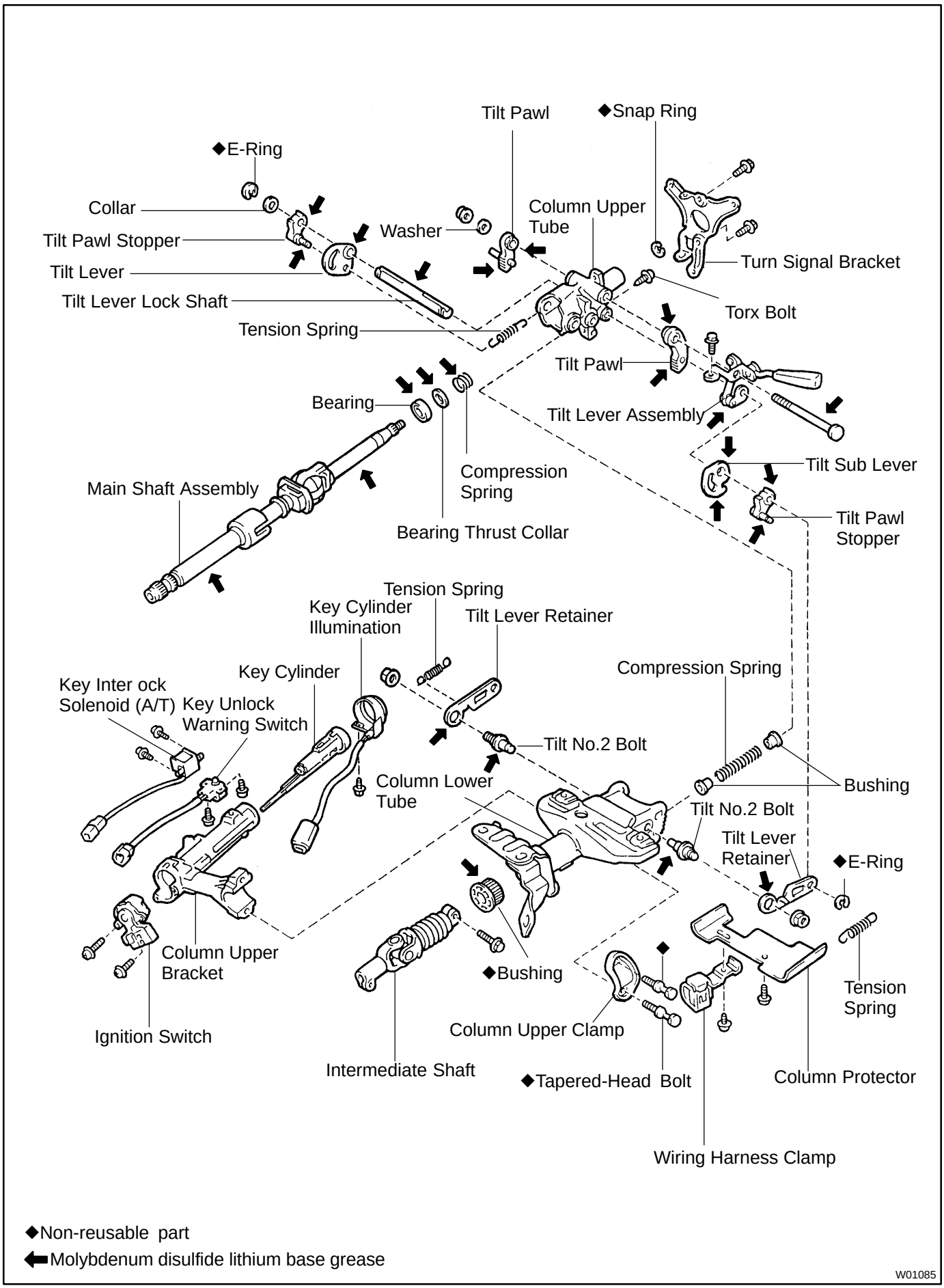

◆Non-reusable part

⬅Molybdenum disulfide lithium base grease

W01085

SHIFT AND SELECT LEVER SHAFT

MX0BU-01

COMPONENTS

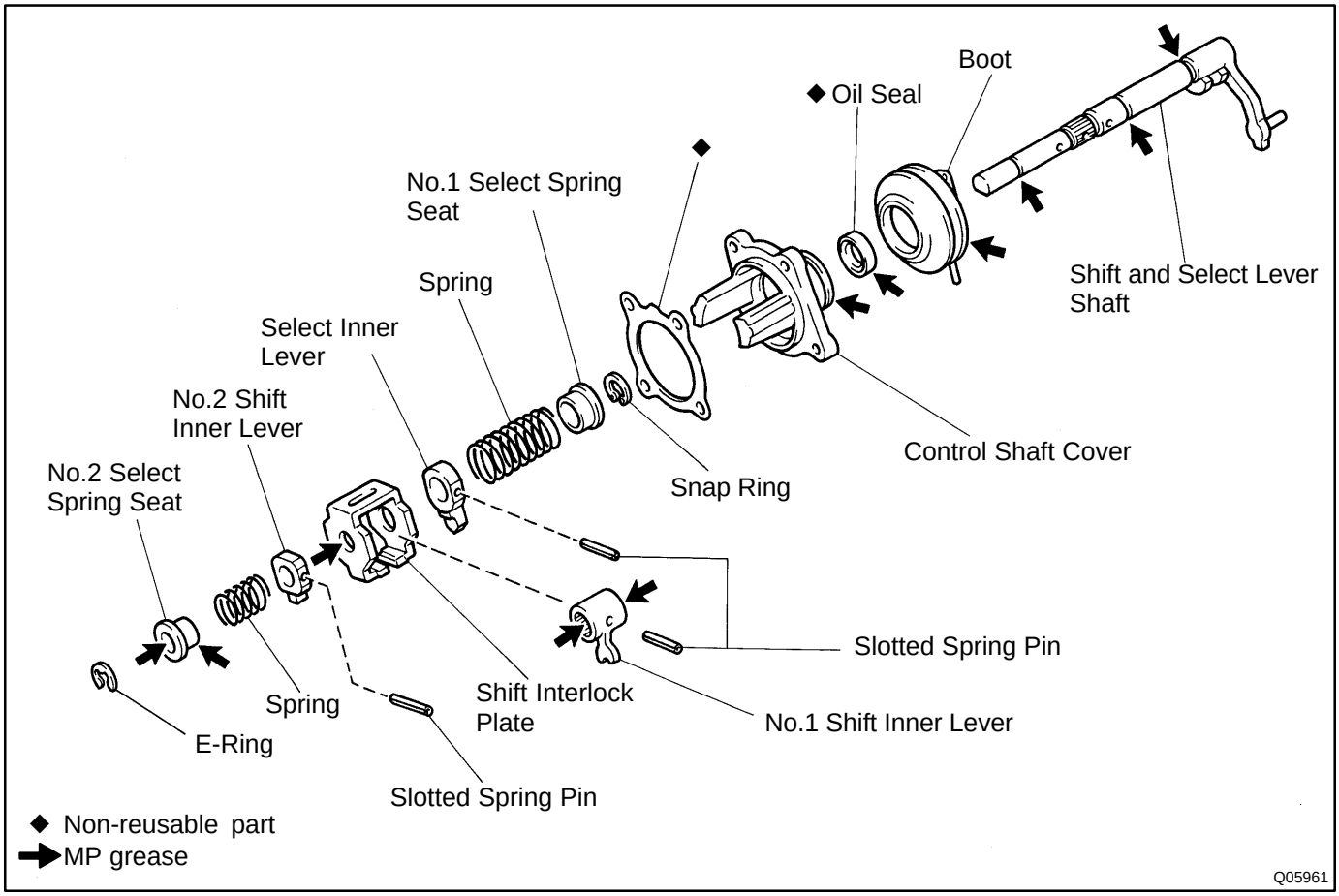

POWER STEERING VANE PUMP (7A-FE)

SR16V-02

COMPONENTS

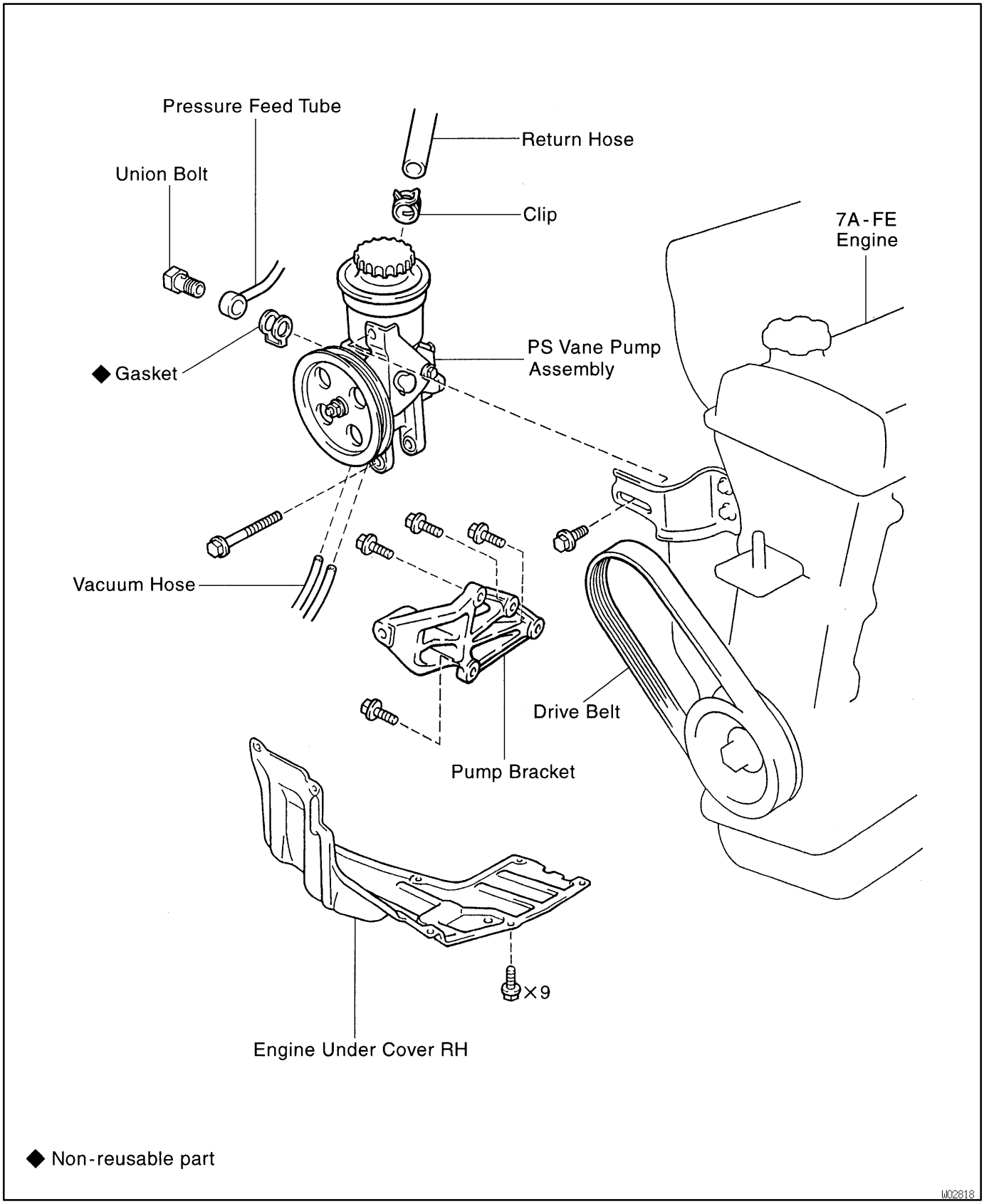

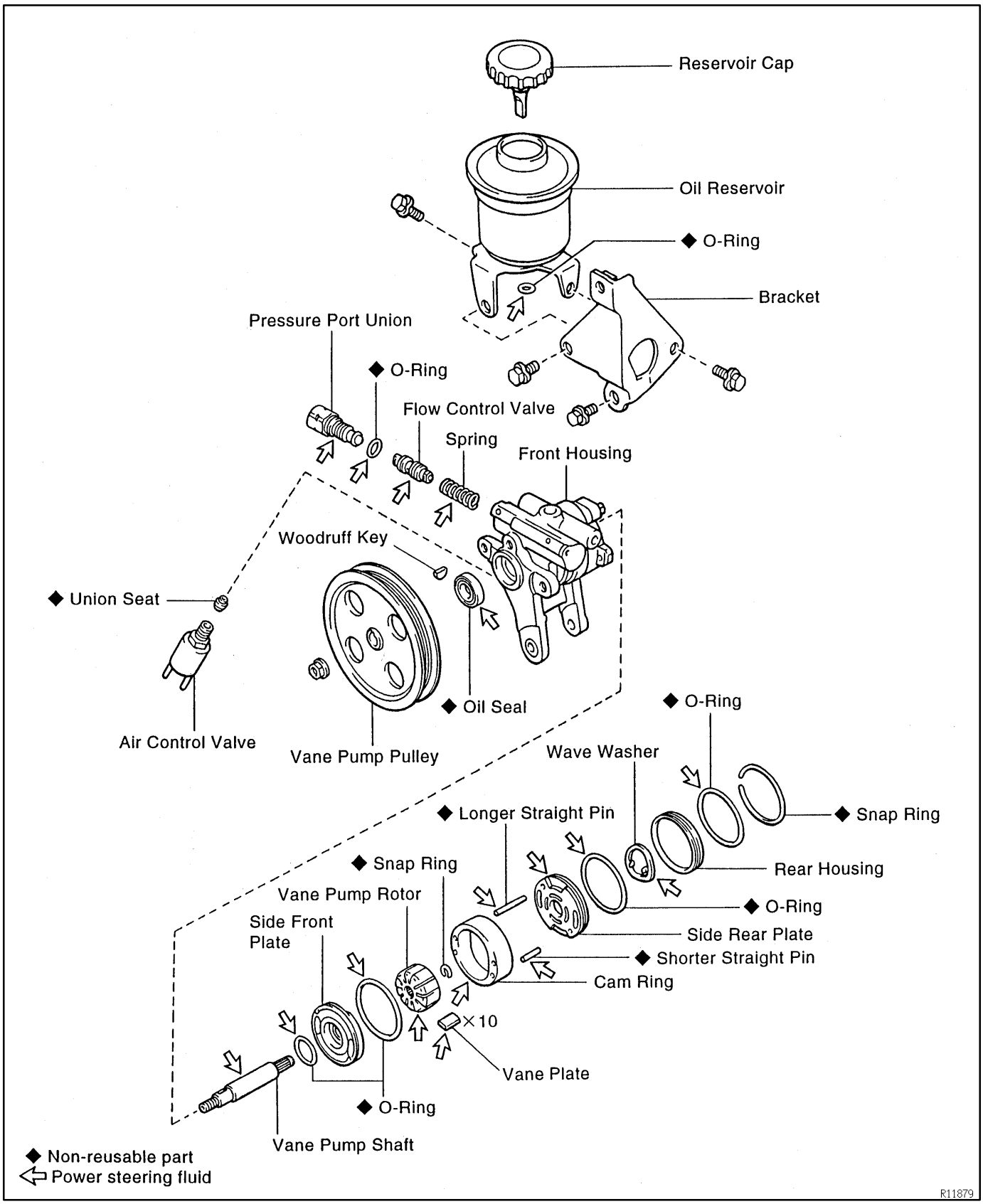
Reservoir Cap
Oil Reservoir
◆ O-Ring
Bracket
Pressure Port Union
◆ O-Ring
Flow Control Valve
Spring
Front Housing
Woodruff Key
◆ Union Seat
Air Control Valve
Vane Pump Pulley
◆ Oil Seal
◆ O-Ring
Wave Washer
◆ Snap Ring
◆ Longer Straight Pin
Rear Housing
◆ Snap Ring
Vane Pump Rotor
◆ O-Ring
Side Front Plate
Side Rear Plate
◆ Shorter Straight Pin
Cam Ring
×10
Vane Plate
◆ O-Ring
Vane Pump Shaft
◆ Non-reusable part
⇦ Power steering fluid
R11879

SF0W7-02

COMPONENTS

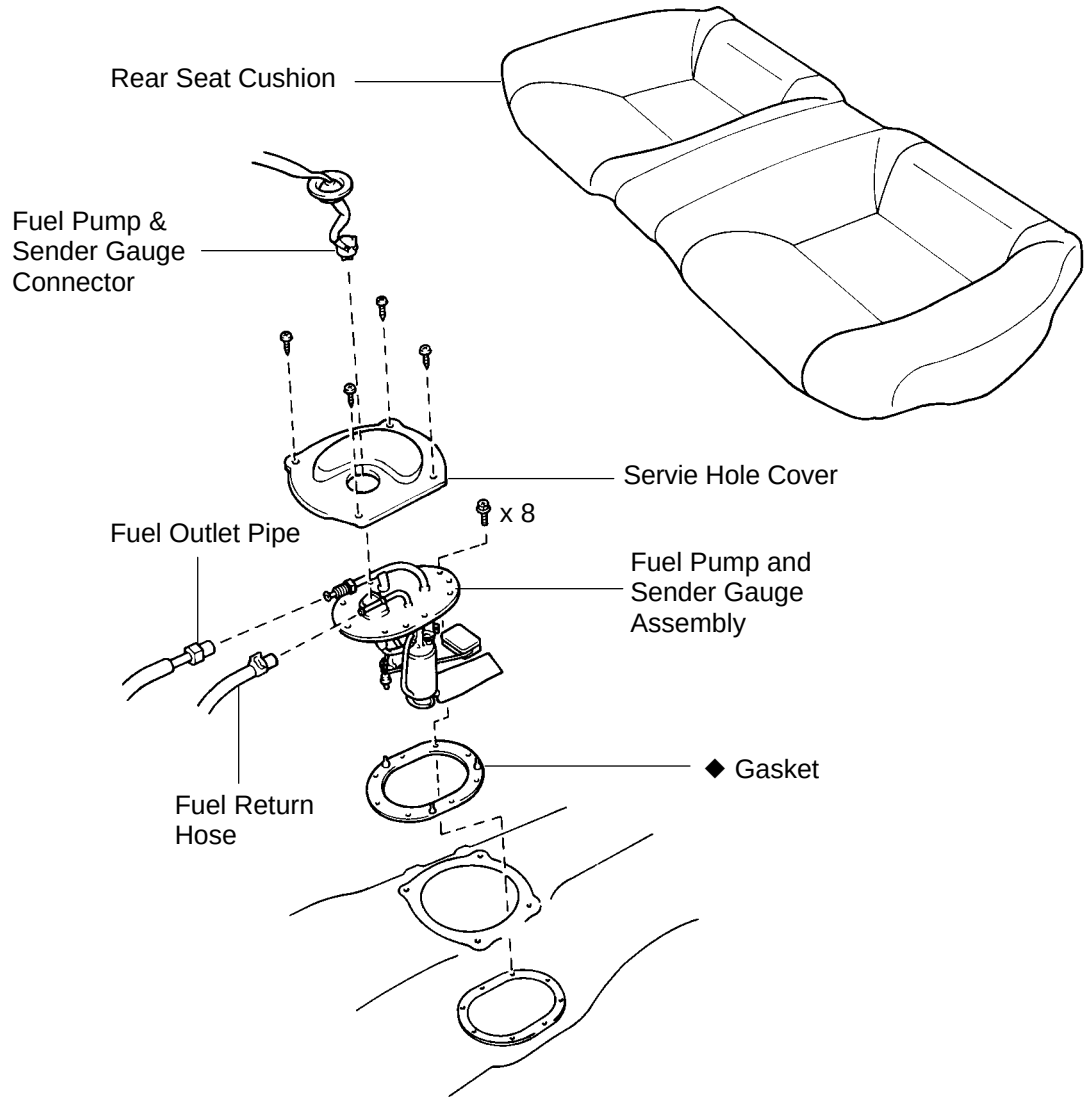

◆ Non-reusable part

S01539

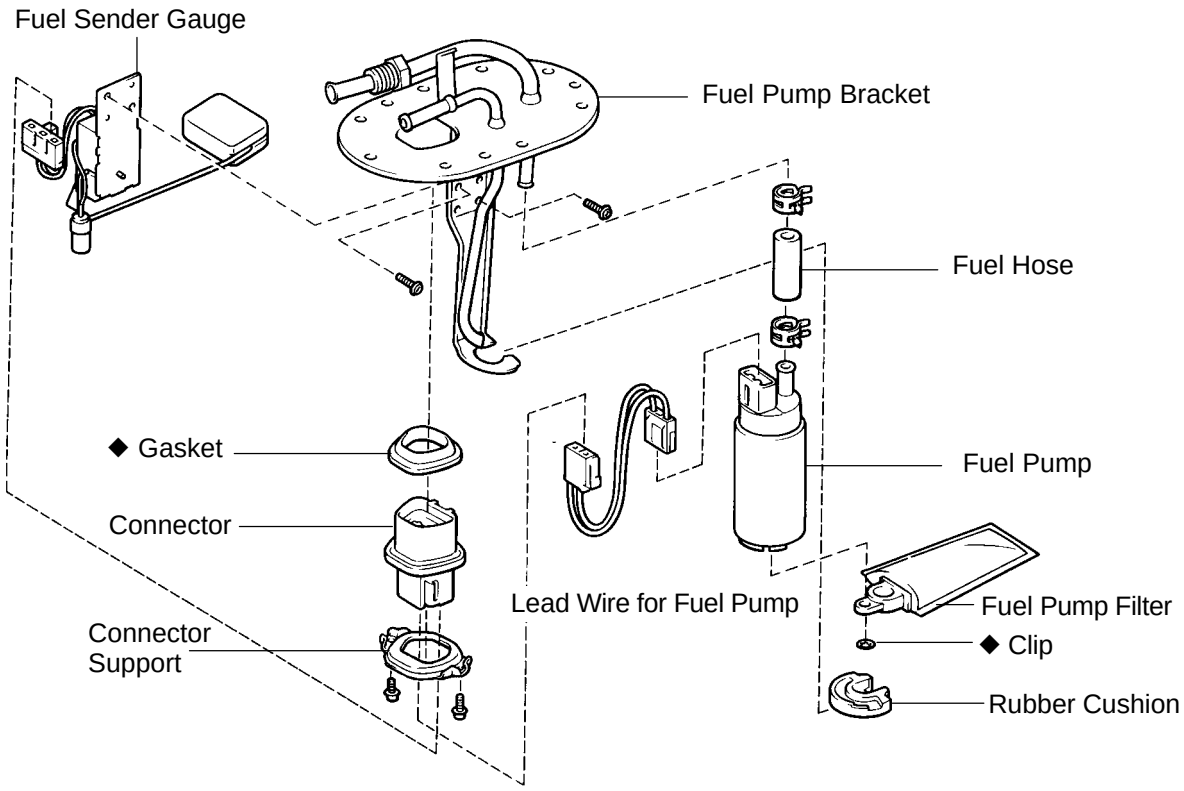

◆ Non-reusable part

S01524

DI54J-01

CUSTOMER PROBLEM ANALYSIS CHECK

CRUISE CONTROL SYSTEM Check Sheet

Inspector's name: _____

Customer's Name		**Registration No.**	
		Registration Year	
		Frame No.	
Date of Vehicle Brought in	/ /	**Odometer Reading**	**km Mile**

Condition of Problem Occurrence	**Date of Problem Occurrence**	/ /
	How Often does Problem Occur?	☑ Continuous ☑ Intermittent (Times a day)
	Vehicle Speed when Problem Occurred	**km Mile**

Symptoms	☑ Auto cancel occurs	● Driving condition ☐ City driving ☐ Freeway ☐ Up hill ☐ Down hill ● After cancel occurred, did the driver activate cruise control again? ☐ Yes ☐ No
	☐ Cancel does not occur	☐ With brake ON ☐ Except D position shift ☐ At 40 km/h (25 mph) or less ☐ When control SW turns to CANCEL position
	☐ Cruise control malfunction	☐ Slip to acceleration side ☐ Slip to deceleration side ☐ Hunting occurs ☐ O/D cut off does not occur ☐ O/D does not return
	☐ Switch malfunction	☐ SET ☐ ACCEL ☐ COAST ☐ RESUME ☐ CANCEL
	☐	☐ Remains ON ☐ Does not light up ☐ Blinking

DTC Check	**1st Time**	☐ Normal Code ☐ Malfunction Code (Code)
	2nd Time	☐ Normal Code ☐ Malfunction Code (Code)

DI51J-01

CUSTOMER PROBLEM ANALYSIS CHECK

ENGINE CONTROL SYSTEM Check Sheet

Inspector's Name _____

Customer's Name		**Model and Model Year**	
Driver's Name		**Frame No.**	
Data Vehicle Brought in		**Engine Model**	
License No.		**Odometer Reading**	km miles

Problem Symptoms	☐ **Engine does not Start**	☐ **Engine does not crank** ☐ **No initial combustion** ☐ **No complete combustion**
	☐ **Difficult to Start**	☐ **Engine cranks slowly** ☐ **Other** _____
	☐ **Poor Idling**	☐ **Incorrect first idle** ☐ **Idling rpm is abnormal** ☐ **High (rpm)** ☐ **Low (rpm)** ☐ **Rough idling** ☐ **Other** _____
	☐ **Poor Driveaability**	☐ **Hesitation** ☐ **Back fire** ☐ **Muffler explosion (after-fire)** ☐ **Surging** ☐ **Knocking** ☐ **Other** _____
	☐ **Engine Stall**	☐ **Soon after starting** ☐ **After accelerator pedal depressed** ☐ **After accelerator pedal released** ☐ **During A/C operation** ☐ **Shifting from N to D** ☐ **Other** _____
	☐ **Others**	

Datas Problem Occurred		
Problem Frequency		☐ **Constant** ☐ **Sometimes (times per day/month)** ☐ **Once only** ☐ **Other** _____
Condition When Problem Occurs	**Weather**	☐ **Fine** ☐ **Cloudy** ☐ **Rainy** ☐ **Snowy** ☐ **Various/Other** _____
	Outdoor Temperature	☐ **Hot** ☐ **Warm** ☐ **Cool** ☐ **Cold (approx. ____˚F/____˚C)**
	Place	☐ **Highway** ☐ **Suburbs** ☐ **Inner City** ☐ **Uphill** ☐ **Downhill** ☐ **Rough road** ☐ **Other** _____
	Engine Temp.	☐ **Cold** ☐ **Warming up** ☐ **After Warming up** ☐ **Any temp.** ☐ **Other** _____
	Engine Operation	☐ **Starting** ☐ **Just after starting (min.)** ☐ **Idling** ☐ **Racing** ☐ **Driving** ☐ **Constant speed** ☐ **Acceleration** ☐ **Deceleration** ☐ **A/C switch ON/OFF** ☐ **Other** _____

Condition of MIL		☐ **Remains on** ☐ **Sometimes light up** ☐ **Does not light up**
DTC Inspection	**Normal mode (Precheck)**	☐ **Normal** ☐ **Malfunction code(s) (code)** ☐ **Freezed frame data ( )**
	Check Mode	☐ **Normal** ☐ **Malfunction code(s) (code)** ☐ **Freezed frame data ( )**

DI50G-01

CUSTOMER PROBLEM ANALYSIS CHECK

ENGINE CONTROL SYSTEM Check Sheet

Inspector's Name _____

Customer's Name		**Model and Model Year**	
Driver's Name		**Frame No.**	
Data Vehicle Brought in		**Engine Model**	
License No.		**Odometer Reading**	km miles

Problem Symptoms	☐ **Engine does not Start**	☐ **Engine does not crank** ☐ **No initial combustion** ☐ **No complete combustion**
	☐ **Difficult to Start**	☐ **Engine cranks slowly** ☐ **Other** _____
	☐ **Poor Idling**	☐ **Incorrect first idle** ☐ **Idling rpm is abnormal** ☐ **High (rpm)** ☐ **Low (rpm)** ☐ **Rough idling** ☐ **Other** _____
	☐ **Poor Driveaability**	☐ **Hesitation** ☐ **Back fire** ☐ **Muffler explosion (after-fire)** ☐ **Surging** ☐ **Knocking** ☐ **Other** _____
	☐ **Engine Stall**	☐ **Soon after starting** ☐ **After accelerator pedal depressed** ☐ **After accelerator pedal released** ☐ **During A/C operation** ☐ **Shifting from N to D** ☐ **Other** _____
	☐ **Others**	

Datas Problem Occurred		
Problem Frequency		☐ **Constant** ☐ **Sometimes (times per day/month)** ☐ **Once only** ☐ **Other** _____
Condition When Problem Occurs	**Weather**	☐ **Fine** ☐ **Cloudy** ☐ **Rainy** ☐ **Snowy** ☐ **Various/Other** _____
	Outdoor Temperature	☐ **Hot** ☐ **Warm** ☐ **Cool** ☐ **Cold (approx. ____˚F/____˚C)**
	Place	☐ **Highway** ☐ **Suburbs** ☐ **Inner City** ☐ **Uphill** ☐ **Downhill** ☐ **Rough road** ☐ **Other** _____
	Engine Temp.	☐ **Cold** ☐ **Warming up** ☐ **After Warming up** ☐ **Any temp.** ☐ **Other** _____
	Engine Operation	☐ **Starting** ☐ **Just after starting (min.)** ☐ **Idling** ☐ **Racing** ☐ **Driving** ☐ **Constant speed** ☐ **Acceleration** ☐ **Deceleration** ☐ **A/C switch ON/OFF** ☐ **Other** _____

Condition of MIL		☐ **Remains on** ☐ **Sometimes light up** ☐ **Does not light up**
DTC Inspection	**Normal mode (Precheck)**	☐ **Normal** ☐ **Malfunction code(s) (code)** ☐ **Freezed frame data ( )**
	Check Mode	☐ **Normal** ☐ **Malfunction code(s) (code)** ☐ **Freezed frame data ( )**

DI52K-01

CUSTOMER PROBLEM ANALYSIS CHECK

Electronically Controlled Transaxle Check Sheet

Inspector's Name :

Customer's Name		Registration No.	
		Registration Year	/ /
		Frame No.	
Date Vehicle Brought In	/ /	Odometer Reading	km mile

Date Problem Occurred	/ /
How Often Does Problem Occur?	☐ Continuous ☐ Intermittent (times a day)

Symptoms	☐ Vehicle does not move (☐ Any position ☐ Particular position)
	☐ No up-shift (☐ 1st → 2nd ☐ 2nd → 3rd ☐ 3rd → O/D)
	☐ No down-shift (☐ O/D → 3rd ☐ 3rd → 2nd ☐ 2nd → 1st)
	☐ Lock-up malfunction
	☐ Shift point too high or too low
	☐ Harsh engagement (☐ N → D ☐ Lock-up ☐ Any drive position)
	☐ Slip or shudder
	☐ No kick-down
	☐ Others ( )

Check Item	Malfunction Indicator Lamp	☐ Normal ☐ Remains ON

DTC Check	1st Time	☐ Normal code	☐ Malfunction code (Code)
	2nd Time	☐ Normal code	☐ Malfunction code (Code)

DI530-02

CUSTOMER PROBLEM ANALYSIS CHECK

Electronically Controlled Transaxle Check Sheet

Inspector's Name :

Customer's Name		Registration No.	
		Registration Year	/ /
		Frame No.	
Date Vehicle Brought In	/ /	Odometer Reading	km mile

Date Problem Occurred	/ /
How Often Does Problem Occur?	☐ Continuous ☐ Intermittent (times a day)

Symptoms	☐ Vehicle does not move (☐ Any position ☐ Particular position)
	☐ No up-shift (☐ 1st → 2nd ☐ 2nd → 3rd ☐ 3rd → O/D)
	☐ No down-shift (☐ O/D → 3rd ☐ 3rd → 2nd ☐ 2nd → 1st)
	☐ Lock-up malfunction
	☐ Shift point too high or too low
	☐ Harsh engagement (☐ N → D ☐ Lock-up ☐ Any drive position)
	☐ Slip or shudder
	☐ No kick-down
	☐ Others ( )

Check Item	Malfunction Indicator Lamp	☐ Normal ☐ Remains ON

DTC Check	1st Time	☐ Normal code	☐ Malfunction code (Code)
	2nd Time	☐ Normal code	☐ Malfunction code (Code)

DI53Z-01

CUSTOMER PROBLEM ANALYSIS CHECK

Supplemental Restraint System Check Sheet

Inspector's Name _____

Customer's Name		**Registration No.**	
		Registration Year	/ /
		Frame No.	
Date Vehicle Brought In	/ /	**Odometer Reading**	**km Miles**

Date Problem Dist Occurred	/ /
Weather	☐ Fine ☐ Cloudy ☐ Rainy ☐ Snowy ☐ Other
Temperature	**Approx.**

Vehicle Operation	☐ Starting ☐ Idling ☐ Driving [☐ Constant speed ☐ Acceleration ☐ Deceleration ☐ Other]
Road Conditions	
Details Of Problem	

Vehicle Inspection, Repair History¿Prior to Occurrence of Malfunction(Including Supplemental Restraint System)	

Diagnosis System Inspection

SRS Warning Light Inspection	**1st Time**	☐ Remains ON ☐ Sometimes Light Up ☐ Does Not Light Up
	2nd Time	☐ Remains ON ☐ Sometimes Light Up ☐ Does Not Light Up
DTC Inspection	**1st Time**	☐ Normal Code ☐ Malfunction Code [Code.]
	2nd Time	☐ Normal Code ☐ Malfunction Code [Code.]

DI54L-01

DIAGNOSTIC TROUBLE CODE CHART

If a malfunction code is displayed during the DTC check, check the circuit listed for that code in the table below and proceed to the appropriate page.

DTC No. (See Page)	Detection Item	Trouble Area
-	• Normal	-
11 (DI-423)	• Actuator Motor Circuit	• Cruise control actuator motor • Harness or connector between actuator motor and ECU • ECU
12 (DI-425)	• Actuator Magnetic Clutch Circuit	• Cruise control actuator magnetic clutch • Harness or connector between ECU and magnetic clutch, magnetic clutch and body ground • ECU • STOP Fuse
13 (DI-428)	• Actuator Position Sensor Circuit	• Cruise control actuator motor • Cruise control actuator position sensor • Harness or connector between actuator position sensor and body ground • Harness or connector between actuator motor and ECU • ECU
14 (DI-423) (DI-428)	• Actuator Motor Circuit • Actuator Position Sensor Circuit	
21 (DI-431)	• Vehicle Speed Sensor Circuit	• Vehicle speed sensor • Combination meter • Harness or connector between vehicle speed sensor and combination meter, combination meter and ECU • ECU
*23 (DI-431)	• Actuator Control Cable • Vehicle Speed Sensor Circuit	• Actuator • Vehicle speed sensor • Harness and connector in OD and SPD circuit (Open or short intermittently) • ECU
32 (DI-434)	• Control Switch Circuit (Cruise Control Switch)	• Cruise control switch • Harness or connector between control switch and ECU • ECU
41	• Cruise Control ECU	• ECU
42	• Source Voltage Drop	• Battery
43	• Cruise Control ECU	• ECU

HINT:

- When 2 or more codes are indicated, the lowest numbered code will be displayed first.
- If the inspection ”Proceed to next circuit inspection shown on matrix chart” is given in the flow chart for each circuit, proceed to the circuit with the next highest number in the table to continue check.
- If the trouble still reappears even though there are no abnormalities in any of the other circuit, then check or replace the cruise control ECU as the last step.

(*) When the vehicle speed decreases on uphill roads, the speed can be set again and driving continued. (This is not a malfunction.)

DI51L-02

DIAGNOSTIC TROUBLE CODE CHART

HINT:

Parameters listed in the chart may not be exactly the same as your reading due to the type of instrument or other factors.

If a malfunction code is displayed during the DTC check in check mode, check the circuit for that code listed in the table below. For details of each code, turn to the page referred to under the ”See page ” for the respective ”DTC No.” in the DTC chart.

SAE Controlled:

DTC No. (See Page)	Detection Item	Trouble Area	MIL*	Memory
P0105 (DI-128)	Manifold Absolute Pressure/Barometric Pressure Circuit Malfunction	• Open or short in manifold absolute pressure sensor circuit • Manifold absolute pressure sensor • ECM	○	○
P0106 (DI-132)	Manifold Absolute Pressure/Barometric Pressure Circuit Range/Performance Problem	• Manifold absolute pressure sensor	○	○
P0110 (DI-133)	Intake Air Temp. Circuit Malfunction	• Open or short in intake air temp. sensor circuit • Intake air temp. sensor • ECM	○	○
P0115 (DI-137)	Engine Coolant Temp. Circuit Malfunction	• Open or short in engine coolant temp. sensor circuit • Engine coolant temp. sensor • ECM	○	○
P0116 (DI-142)	Engine Coolant Temp. Circuit Range/Performance Problem	• Engine coolant temp. sensor • Cooling system	○	○
P0120 (DI-143)	Throttle/Pedal Position Sensor/Switch ”A” Circuit Malfunction	• Open or short in throttle position sensor circuit • Throttle position sensor • ECM	○	○
P0121 (DI-147)	Throttle/Pedal Position Sensor/Switch ”A” Circuit Range/Performance Problem	• Throttle position sensor	○	○
P0125 (DI-148)	Insufficient Coolant Temp. for Closed Loop Fuel Control	• Open or short in oxygen sensor circuit • Oxygen sensor	○	○
P0130 (DI-151)	Oxygen Sensor Circuit Malfunction (Bank 1 Sensor 1)	• Oxygen sensor • Fuel trim malfunction	○	○
P0133 (DI-154)	Oxygen Sensor Circuit Slow Response (Bank 1 Sensor 1)	• Oxygen sensor	○	○
P0136 (DI-155)	Oxygen Sensor Circuit Malfunction (Bank 1 Sensor 2)	• Oxygen sensor	○	○
P0171 (DI-157)	System too Lean (Fuel Trim)	• Air intake (hose loose) • Fuel line pressure • Injector blockage • Oxygen sensor malfunction • Manifold absolute pressure sensor • Engine coolant temp. sensor	○	○

*: ○ ・・・ MIL lights up

DTC No. (See Page)	Detection Item	Trouble Area	MIL*	Memory
P0172 (DI-157)	System too Rich (Fuel Trim)	• Fuel line pressure • Injector blockage, leak • Oxygen sensor malfunction • Manifold absolute pressure sensor • Engine coolant temp. sensor	○	○
P0300 (DI-160)	Random/Multiple Cylinder Misfire Detected	• Ignition system • Injector • Fuel line pressure • EGR • Compression pressure • Valve clearance not to specification • Valve timing • Manifold absolute pressure sensor • Engine coolant temp. sensor	○	○
P0301 P0302 P0303 P0304 (DI-160)	Misfire Detected - Cylinder 1 - Cylinder 2 - Cylinder 3 - Cylinder 4			
P0325 (DI-165)	Knock Sensor 1 Circuit Malfunction	• Open or short in knock sensor 1 circuit • Knock sensor 1 (looseness) • ECM	○	○
P0335 (DI-168)	Crankshaft Position Sensor ”A” Circuit Malfunction	• Open or short in crankshaft position sensor circuit • Crankshaft position sensor • Starter • ECM	○	○
P0340 (DI-171)	Camshaft Position Sensor Circuit Malfunction	• Open or short in camshaft position sensor circuit • Camshaft position sensor • Starter • ECM	○	○
P0401 (DI-173)	Exhaust Gas Recirculation Flow Insufficient Detected	• EGR valve stuck closed • Open or short in VSV circuit for EGR • Vacuum or EGR hose disconnected • Manifold absolute pressure sensor • EGR VSV open or close malfunction • ECM	○	○
P0402 (DI-180)	Exhaust Gas Recirculation Flow Excessive Detected	• EGR valve stuck open • Vacuum or EGR hose is connected to wrong post • Manifold absolute pressure sensor • ECM	○	○
P0420 (DI-182)	Catalyst System Efficiency Below Threshold	• Three-way catalytic converter • Open or short in oxygen sensor circuit • Oxygen sensor	○	○
P0500 (DI-185)	Vehicle Speed Sensor Malfunction	• Open or short in speed sensor circuit • Vehicle speed sensor • Combination meter • ECM	○	○
P0505 (DI-187)	Idle Control System Malfunction	• IAC valve is stuck or closed • Open or short in IAC valve circuit • Open or short in A/C signal circuit • Air intake (hose loose)	○	○

*: ○ ・・・ MIL lights up

Manufacturer Controlled:

DTC No. (See Page)	Detection Item	Trouble Area	MIL*	Memory
P1300 (DI-190)	Igniter Circuit Malfunction	• Open or short in IGF or IGT circuit from igniter to ECM • Igniter • ECM	○	○
P1335 (DI-195)	Crankshaft Position Sensor Circuit Malfunction (during engine running)	• Open or short in crankshaft position sensor circuit • Crankshaft position sensor • ECM	-	○
P1500 (DI-196)	Starter Signal Circuit Malfunction	• Open or short in starter signal circuit • Open or short in ignition switch or starter relay circuit • ECM	-	○
P1600 (DI-198)	ECM BATT Malfunction	• Open in back up power source circuit • ECM	○	○
P1780 (DI-200)	Park/Neutral Position Switch Malfunction	• Short in park/neutral position switch circuit • Park/neutral position switch • ECM	○	○

-: ・・・ MIL dose not light up

*: ○ ・・・ MIL lights up

DI52M-02

DIAGNOSTIC TROUBLE CODE CHART

If a DTC is displayed during the DTC check, check the circuit listed in the table below and proceed to the page given.

DTC No. (See Page)	Detection Item	Trouble Area	MIL *	Memory
P0500 (DI-238)	Vehicle Speed Sensor Malfunction	• Open or short in vehicle speed sensor circuit • Vehicle speed sensor • Combination meter • ECM	●	○
P0750 (DI-239)	Shift Solenoid A Malfunction (Shift Solenoid Valve No.1)	• Shift solenoid valve No.1 is stuck open or closed • Valve body is blocked up or stuck	●	○
P0753 (DI-240)	Shift Solenoid A Electrical Malfunction (Shift Solenoid Valve No.1)	• Open or short in shift solenoid valve No.1 circuit • Shift solenoid valve No.1 • ECM	●	○
P0755 (DI-239)	Shift Solenoid B Malfunction (Shift Solenoid Valve No.2)	• Shift solenoid valve No.2 is stuck open or closed • Valve body is blocked up or stuck	●	○
P0758 (DI-240)	Shift Solenoid B Electrical Malfunction (Shift Solenoid Valve No.2)	• Open or short in shift solenoid valve No.2 circuit • Shift solenoid valve No.2 • ECM	●	○
P0770 (DI-243)	Shift Solenoid E Malfunction (Shift Solenoid Valve SL)	• Shift solenoid valve SL is stuck open or closed • Valve body is blocked up or stuck • Lock-up clutch	●	○
P0773 (DI-245)	Shift Solenoid E Electrical Malfunction (Shift Solenoid Valve SL)	• Open or short in shift solenoid valve SL circuit • Shift solenoid valve SL • ECM	●	○
P1780 (DI-248)	Park/Neutral Position Switch Malfunction	• Short in park/neutral position switch circuit • Park/neutral position switch • ECM	●	○

● ... MIL light up

DI532-03

DIAGNOSTIC TROUBLE CODE CHART

If a DTC is displayed during the DTC check, check the circuit listed for that code in the table below and proceed to the page given.

DTC No. (See Page)	Detection Item	Trouble Area	MIL *	Memory
P0500 (DI-281)	Vehicle Speed Sensor Malfunction	• Open or short in vehicle speed sensor circuit • Vehicle speed sensor • Combination meter • ECM	●	○
P0750 (DI-282)	Shift Solenoid A Malfunction (Shift Solenoid Valve No.1)	• Shift solenoid valve No.1 is stuck open or closed • Valve body is blocked up or stuck	●	○
P0753 (DI-284)	Shift Solenoid A Electrical Malfunction (Shift Solenoid Valve No.1)	• Open or short in shift solenoid valve No.1 circuit • Shift solenoid valve No.1 • ECM	●	○
P0755 (DI-282)	Shift Solenoid B Malfunction (Shift Solenoid Valve No.2)	• Shift solenoid valve No.2 is stuck open or closed • Valve body is blocked up or stuck	●	○
P0758 (DI-284)	Shift Solenoid B Electrical Malfunction (Shift Solenoid Valve No.2)	• Open or short in shift solenoid valve No.2 circuit • Shift solenoid valve No.2 • ECM	●	○
P0770 (DI-288)	Shift Solenoid E Malfunction (Shift Solenoid Valve SL)	• Shift solenoid valve SL is stuck open or closed • Valve body is blocked up or stuck • Lock-up clutch	●	○
P0773 (DI-290)	Shift Solenoid E Electrical Malfunction (Shift Solenoid Valve SL)	• Open or short in shift solenoid valve SL circuit • Shift solenoid valve SL • ECM	●	○
P1780 (DI-293)	Park/Neutral Position Switch Malfunction	• Short in park/neutral position switch signal circuit • Park/neutral position switch • ECM	●	○

* : ●...MIL light up

DI53I-02

DIAGNOSTIC TROUBLE CODE CHART

HINT:

- Using SST 09843-18020, connect the terminals Tc and E_1, and remove the short pin.
- If any abnormality is not found when inspection parts, inspect the ECU.

If a malfunction code is displayed during the DTC check, check the circuit listed for that the code. For details of each code, turn to the page referred to under the "See page" for the respective "DTC No." in the DTC chart.

DTC No. (See Page)	Detection Item	Trouble Area
11 (DI-316)	Open circuit in ABS solenoid relay circuit	• ABS solenoid relay • Open or short in ABS solenoid relay circuit
12 (DI-316)	Short in ABS solenoid relay circuit	• ABS solenoid relay • B+ short in ABS solenoid relay circuit
13 (DI-319)	Open circuit in ABS motor relay circuit	• ABS motor relay • Open or short in ABS motor relay circuit
14 (DI-319)	Short circuit in ABS motor relay circuit	• ABS motor relay • B+ short in ABS motor relay circuit
21 (DI-322)	Open or short circuit in solenoid circuit for right front wheel	• ABS actuator • Open or short in SFRR or SFRH circuit
22 (DI-322)	Open or short circuit in solenoid circuit for left front wheel	• ABS actuator • Open or short in SFLR or SFLH circuit
23 (DI-322)	Open or short circuit in solenoid circuit for right rear wheel	• ABS actuator • Open or short in SRRR or SRRH circuit
24 (DI-322)	Open or short circuit in solenoid circuit for left rear wheel	• ABS actuator • Open or short in SRLR or SRLH circuit
31 (DI-325)	Right front wheel speed sensor signal malfunction	• Right front, left front, right rear and left rear speed sensor • Open or short in each speed sensor circuit • Sensor rotor
32 (DI-325)	Left front wheel speed sensor signal malfunction	
33 (DI-325)	Right rear wheel speed sensor signal malfunction	
34 (DI-325)	Left rear wheel speed sensor signal malfunction	
41 (DI-330)	Low battery positive voltage	• Battery • IC regulator • Open or short in power source circuit
51 (DI-333)	Pump motor is locked Open in pump motor ground	• ABS pump motor
Always ON	Malfunction in ECU Abnormally high battery positive voltage	• ECU • Battery

DI541-01

DIAGNOSTIC TROUBLE CODE CHART

If a malfunction code is displayed during the DTC check, check the circuit listed for that code in the table below (Proceed to the page given for that circuit.).

DTC No. (See Page)	Detection Item	Trouble Area	SRS Warning Light
Normal (DI-398)	• System normal	-	OFF
	• Voltage source drop	• Battery • Center airbag sensor assembly	ON
11 (DI-355)	• Short in squib circuit or front airbag sensor circuit (to ground)	• Steering wheel pad (D squib) • Front passenger airbag assembly (P squib) • Front airbag sensor • Spiral cable • Center airbag sensor assembly • Wire harness	ON
12 (DI-364)	• Short in squib circuit (to B+)	• Steering wheel pad (D squib) • Front passenger airbag assembly (P squib) • Front airbag sensor • Spiral cable • Center airbag sensor assembly • Wire harness	ON
13 (DI-371)	• Short in D squib circuit	• Steering wheel pad (D squib) • Spiral cable • Center airbag sensor assembly • Wire harness	ON
14 (DI-377)	• Open in D squib circuit	• Steering wheel pad (D squib) • Spiral cable • Center airbag sensor assembly • Wire harness	ON
15 (DI-382)	• Open in front airbag sensor circuit	• Front airbag sensor • Center airbag sensor assembly • Wire harness	ON
24 (DI-386)	• Half connection in center airbag sensor assembly connector	• Electrical connection check mechanism • Center airbag sensor assembly	ON
31 (DI-389)	• Center airbag sensor assembly malfunction	• Center airbag sensor assembly	ON
53 (DI-391)	• Short in P squib circuit	• Front passenger airbag assembly (P squib) • Center airbag sensor assembly • Wire harness	ON
54 (DI-395)	• Open in P squib circuit	• Front passenger airbag assembly (P squib) • Center airbag sensor assembly • Wire harness	ON

HINT:

- When the SRS warning light remains lit up and the DTC is the normal code, this means a source voltage drop.
  This malfunction is not stored in memory by the center airbag sensor assembly and if the power source voltage returns to normal, after approx. 10 seconds the SRS warning light will automatically go out.
- When 2 or more codes are indicated, the lowest numbered code will appear first.
- If a code not listed on the chart is displayed, then the center airbag sensor assembly is faulty.

DI50I-02

DIAGNOSTIC TROUBLE CODE CHART

HINT:

Parameters listed in the chart may not be exactly the same as your reading due to the type of instrument or other factors.

If a malfunction code is displayed during the DTC check in check mode, check the circuit for that code listed in the table below. For details of each code, turn to the page referred to under the ”See page ” for the respective ”DTC No.” in the DTC chart.

SAE Controlled:

DTC No. (See Page)	Detection Item	Trouble Area	MIL*	Memory
P0105 (DI-21)	Manifold Absolute Pressure/Barometric Pressure Circuit Malfunction	• Open or short in manifold absolute pressure sensor circuit • Manifold absolute pressure sensor • ECM	○	○
P0106 (DI-25)	Manifold Absolute Pressure/Barometric Pressure Circuit Range/Performance Problem	• Manifold absolute pressure sensor	○	○
P0110 (DI-26)	Intake Air Temp. Circuit Malfunction	• Open or short in intake air temp. sensor circuit • Intake air temp. sensor • ECM	○	○
P0115 (DI-30)	Engine Coolant Temp. Circuit Malfunction	• Open or short in engine coolant temp. sensor circuit • Engine coolant temp. sensor • ECM	○	○
P0116 (DI-34)	Engine Coolant Temp. Circuit Range/Performance Problem	• Engine coolant temp. sensor • Cooling system	○	○
P0120 (DI-35)	Throttle/Pedal Position Sensor/Switch ”A” Circuit Malfunction	• Open or short in throttle position sensor circuit • Throttle position sensor • ECM	○	○
P0121 (DI-39)	Throttle/Pedal Position Sensor/Switch ”A” Circuit Range/Performance Problem	• Throttle position sensor	○	○
P0125 (DI-40)	Insufficient Coolant Temp. for Closed Loop Fuel Control	• Open or short in oxygen sensor circuit • Oxygen sensor	○	○
P0130 (DI-43)	Oxygen Sensor Circuit Malfunction (Bank 1 Sensor 1)	• Oxygen sensor • Fuel trim malfunction	○	○
P0133 (DI-46)	Oxygen Sensor Circuit Slow Response (Bank 1 Sensor 1)	• Oxygen sensor	○	○
P0136 (DI-47)	Heated Oxygen Sensor Circuit Malfunction (Bank 1 Sensor 2)	• Heated Oxygen sensor	○	○
P0141 (DI-49)	Heated Oxygen Sensor Heater Circuit Malfunction (Bank 1 Sensor 2)	• Open or short in heater circuit of heated oxygen sensor • Heated oxygen sensor heater • ECM	○	○

*: MIL lights up

DTC No. (See Page)	Detection Item	Trouble Area	MIL*	Memory
P0171 (DI-50)	System too Lean (Fuel Trim)	• Air intake (hose loose) • Fuel line pressure • Injector blockage • Oxygen sensor malfunction • Manifold absolute pressure sensor • Engine coolant temp. sensor	○	○
P0172 (DI-50)	System too Rich (Fuel Trim)	• Fuel line pressure • Injector blockage, leak • Oxygen sensor malfunction • Manifold absolute pressure sensor • Engine coolant temp. sensor	○	○
P0300 (DI-53)	Random/Multiple Cylinder Misfire Detected	• Ignition system • Injector • Fuel line pressure • EGR • Compression pressure • Valve clearance not to specification • Valve timing • Manifold absolute pressure sensor • Engine coolant temp. sensor	○	○
P0301 P0302 P0303 P0304 (DI-53)	Misfire Detected - Cylinder 1 - Cylinder 2 - Cylinder 3 - Cylinder 4			
P0325 (DI-58)	Knock Sensor 1 Circuit Malfunction	• Open or short in knock sensor 1 circuit • Knock sensor 1 (looseness) • ECM	○	○
P0335 (DI-61)	Crankshaft Position Sensor ”A” Circuit Malfunction	• Open or short in crankshaft position sensor circuit • Crankshaft position sensor • Starter • ECM	○	○
P0340 (DI-64)	Camshaft Position Sensor Circuit Malfunction	• Open or short in camshaft position sensor circuit • Camshaft position sensor • Starter • ECM	○	○
P0401 (DI-66)	Exhaust Gas Recirculation Flow Insufficient Detected	• EGR valve stuck closed • Open or short in VSV circuit for EGR • Vacuum or EGR hose disconnected • Manifold absolute pressure sensor • EGR VSV open or close malfunction • ECM	○	○
P0402 (DI-73)	Exhaust Gas Recirculation Flow Excessive Detected	• EGR valve stuck open • Vacuum or EGR hose is connected to wrong post • Manifold absolute pressure sensor • ECM	○	○
P0420 (DI-75)	Catalyst System Efficiency Below Threshold	• Three-way catalytic converter • Open or short in oxygen sensor circuit • Oxygen sensor	○	○
P0500 (DI-78)	Vehicle Speed Sensor Malfunction	• Open or short in vehicle speed sensor circuit • Vehicle speed sensor • Combination meter • ECM	○	○
P0505 (DI-80)	Idle Control System Malfunction	• IAC valve is stuck or closed • Open or short in IAC valve circuit • Open or short in A/C signal circuit • Air intake (hose loose)	○	○

*: ○ ・・・ MIL lights up

Manufacturer Controlled:

DTC No. (See Page)	Detection Item	Trouble Area	MIL*	Memory
P1300 (DI-83)	Igniter Circuit Malfunction	• Open or short in IGF or IGT circuit from igniter to ECM • Ignition coil • ECM	○	○
P1335 (DI-88)	Crankshaft Position Sensor Circuit Malfunction (during engine running)	• Open or short in crankshaft position sensor circuit • Crankshaft position sensor • ECM	-	○
P1500 (DI-89)	Starter Signal Circuit Malfunction	• Open or short in starter signal circuit • Open or short in ignition switch or starter relay circuit • ECM	-	○
P1600 (DI-91)	ECM BATT Malfunction	• Open in back up power source circuit • ECM	○	○
P1780 (DI-93)	Park/Neutral Position Switch Malfunction	• Short in park/neutral position switch circuit • Park/neutral position switch • ECM	○	○

*: ○ ・・・ MIL lights up

*: - ・・・MIL does not light up

SR0JX-02

DISASSEMBLY

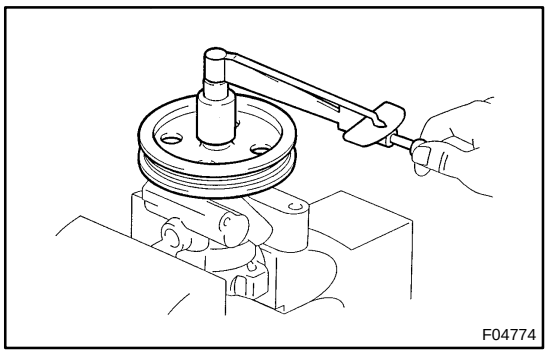
F04774

NOTICE:

When using a vise, do not overtighten it.

1. MEASURE PS VANE PUMP ROTATING TORQUE

(a) Check that the pump rotates smoothly without abnormal noise.

(b) Using a torque wrench, check the pump rotating torque.
Rotating torque:
0.3 N·m (2.8 kgf·cm, 2.4 in.·lbf) or less

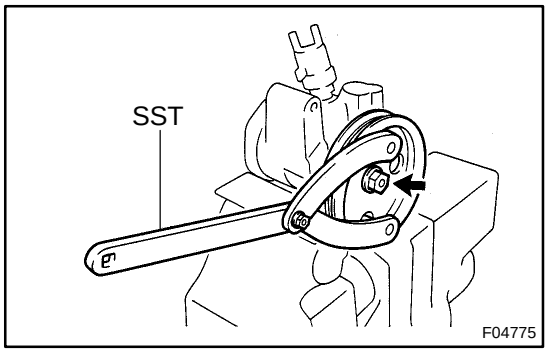

F04775

2. REMOVE VANE PUMP PULLEY

(a) Using SST to stop the pulley rotating, remove the nut.
SST 09960-10010 (09962-01000, 09963-01000)

(b) Remove the woodruff key from the vane pump shaft.

3. REMOVE AIR CONTROL VALVE

Remove the union seat.

4. REMOVE PRESSURE FEED NO.2 TUBE

Remove the union bolt and 2 gaskets.

5. REMOVE SUCTION PORT UNION

(a) Remove the bolt.

(b) Remove the O-ring from the union.

6. REMOVE PRESSURE PORT UNION

Remove the O-ring from the union.

7. REMOVE FLOW CONTROL VALVE AND SPRING

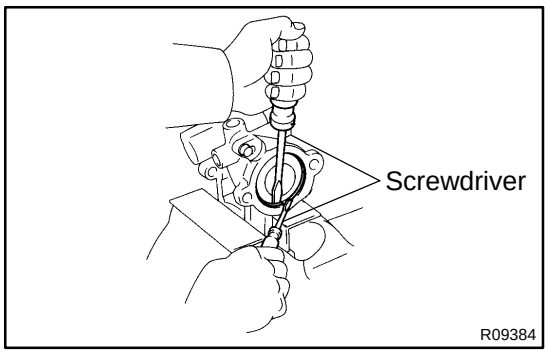

R09384

8. REMOVE REAR HOUSING AND WAVE WASHER

(a) Using 2 screwdrivers, remove the snap ring.

NOTICE:

Be careful not to damage the front and rear housing.

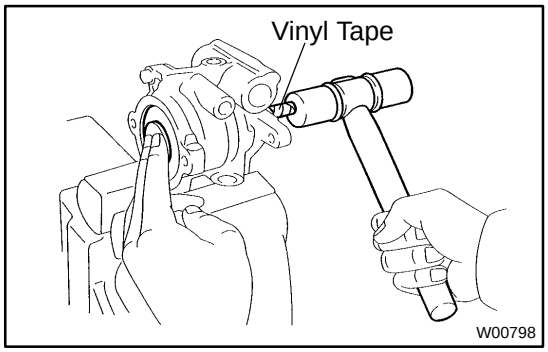

W00798

(b) Wind vinyl tape on the pump shaft.

(c) Using a plastic hammer, tap out the housing and washer.

(d) Remove the O-ring from the housing.

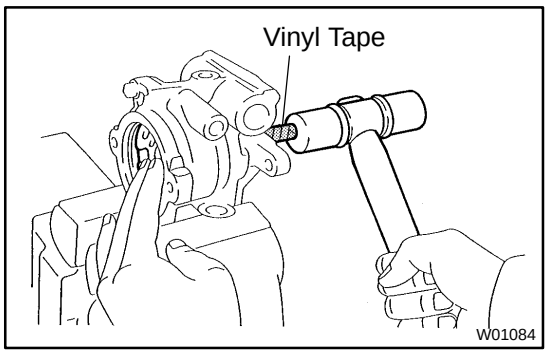

9. REMOVE SIDE REAR PLATE

(a) Using a plastic hammer, tap out the plate.

(b) Remove the O-ring from the plate.

10. REMOVE CAM RING AND 10 VANE PLATES

NOTICE:

Be careful not to drop the vane plate.

11. REMOVE VANE PUMP SHAFT WITH VANE PUMP ROTOR AND SIDE FRONT PLATE

12. REMOVE LONGER STRAIGHT PIN

Remove the pin from the front housing.

13. REMOVE VANE PUMP ROTOR AND SIDE FRONT PLATE

(a) Using a screwdriver, remove the snap ring from the vane pump shaft.

(b) Remove the 2 O-rings from the plate.

14. REMOVE SHORTER STRAIGHT PIN

Remove the pin from the side front plate.

SR0JR-02

DISASSEMBLY

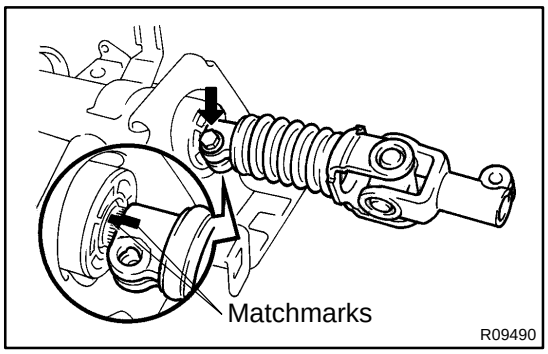

NOTICE:

When using a vise, do not overtighten it.

1. REMOVE INTERMEDIATE SHAFT

(a) Remove the bolt.

(b) Place matchmarks on the intermediate shaft and main shaft.

2. REMOVE KEY CYLINDER ILLUMINATION

Remove the screw.

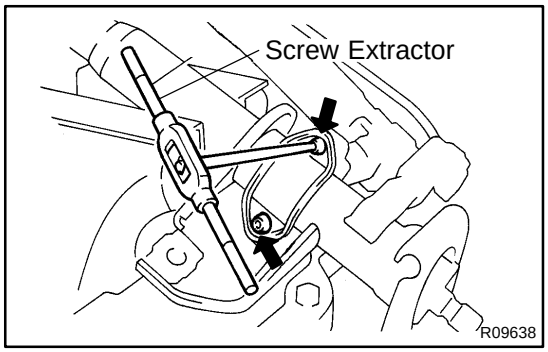

3. REMOVE COLUMN UPPER BRACKET AND COLUMN UPPER CLAMP

(a) Using a centering punch, mark the center of the 2 tapered-head bolts.

(b) Using a 4-5 mm (0.16-0.20 in.) drill, drill into the 2 bolts.

(c) Using a screw extractor, remove the 2 bolts.

4. REMOVE MAIN SHAFT ASSEMBLY WITH BUSHING

(a) Using a snap ring expander, remove the snap ring from the shaft assembly.

(b) Using a brass bar and hammer, tap out the shaft assembly with the bushing from the column tube.

NOTICE:

Take care not to drop the shaft assembly.

(c) Remove the bushing from the shaft assembly.

(d) Using a snap ring expander, remove the snap ring from the shaft assembly.

EM1PC-01

DISASSEMBLY

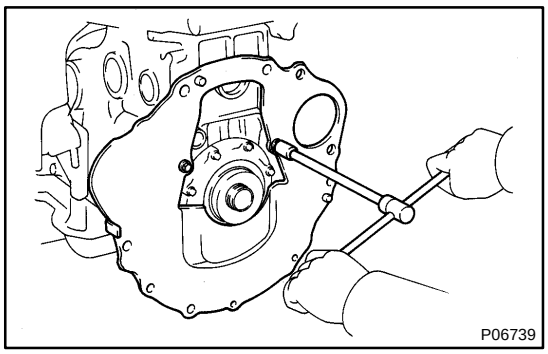

1. **M/T:**
   REMOVE FLYWHEEL
2. **A/T:**
   REMOVE DRIVE PLATE
3. **REMOVE REAR END PLATE**

Remove the 2 bolts and end plate.

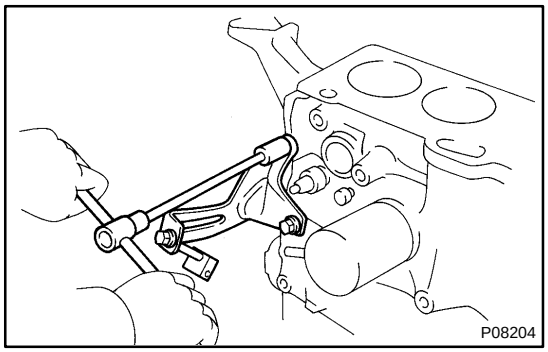

4. **INSTALL ENGINE TO ENGINE STAND FOR DISASSEMBLY**
5. **REMOVE TIMING BELT AND PULLEYS**
   (See page EM-13)
6. **REMOVE CYLINDER HEAD**
   (See page EM-23)
7. **REMOVE GENERATOR BRACKET**

Remove the 3 bolts and generator bracket.

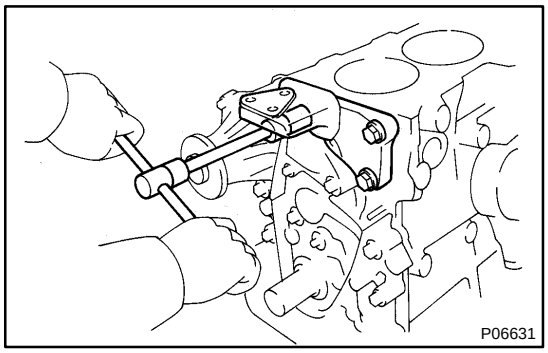

8. **REMOVE RH ENGINE MOUNTING BRACKET**

Remove the 3 bolts and mounting bracket.

9. **REMOVE WATER PUMP**
   (See page CO-5)
10. **REMOVE OIL FILTER**
    (See page LU-2)
11. **REMOVE ENGINE COOLANT DRAIN PLUG**
12. **REMOVE OIL PRESSURE SWITCH**
    (See page LU-7)

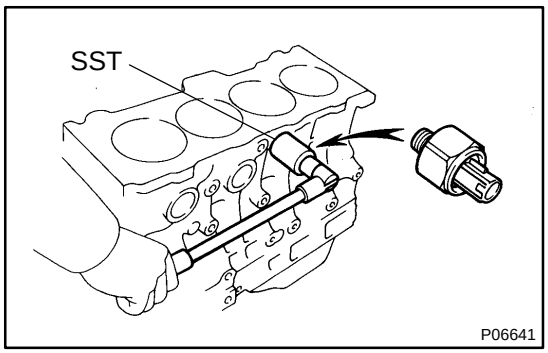

13. **REMOVE KNOCK SENSOR**

Using SST, remove the knock sensor.

SST 09816-30010

14. **REMOVE OIL PAN AND OIL PUMP**
    (See page LU-7)

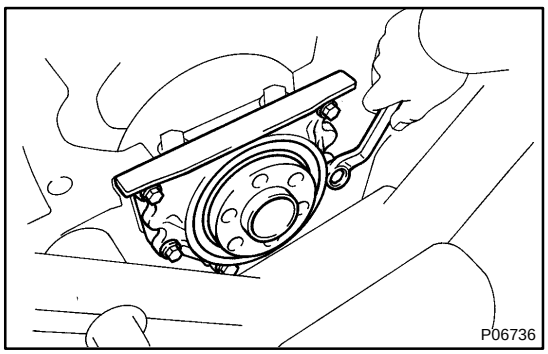

15. **REMOVE REAR OIL SEAL RETAINER**

Remove the 6 bolts, retainer and gasket.

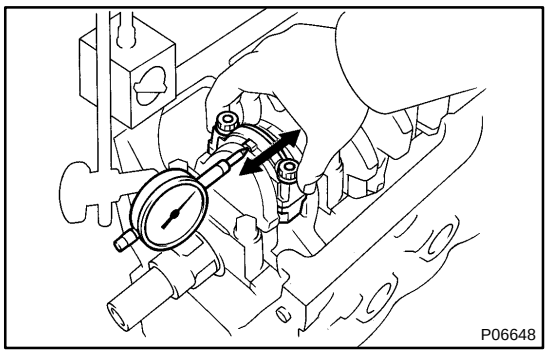

16. CHECK CONNECTING ROD OIL CLEARANCE

Using a dial indicator, measure the thrust clearance while moving the connecting rod back and forth.

Standard thrust clearance:
0.15 - 0.25 mm (0.0059 - 0.0098 in.)
Maximum thrust clearance:
0.30 mm (0.0118 in.)

If the thrust clearance is greater than maximum, replace the connecting rod assembly. If necessary, replace the crankshaft.

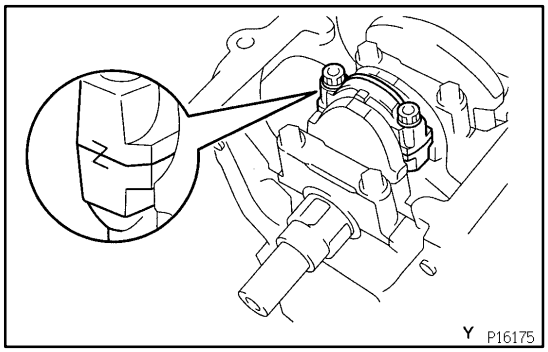

17. REMOVE CONNECTING ROD CAPS AND CHECK OIL CLEARANCE

(a) Check the matchmarks on the connecting rod and cap to ensure correct reassembly.
(b) Remove the connecting rod cap bolts.

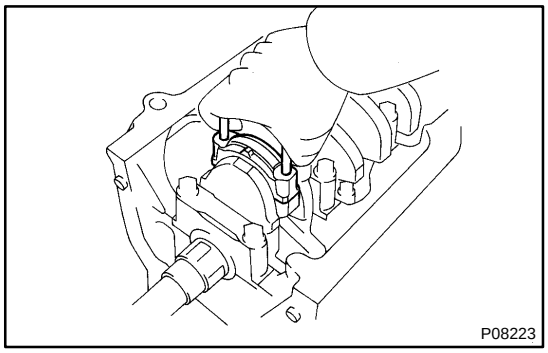

(c) Using the 2 removed connecting rod bolts, remove the connecting rod cap and lower bearing by wiggling the connecting rod cap right and left.

HINT:
Keep the lower bearing inserted with the connecting rod cap.

(d) Clean the crank pin and bearing.
(e) Check the crank pin and bearing for pitting and scratches.

If the crank pin or bearing is damaged, replace the bearings. If necessary, grind or replace the crankshaft.

(f) Lay a strip of Plastigage across the crank pin.
(g) Install the connecting rod cap with the 2 bolts.
(See page EM-85)

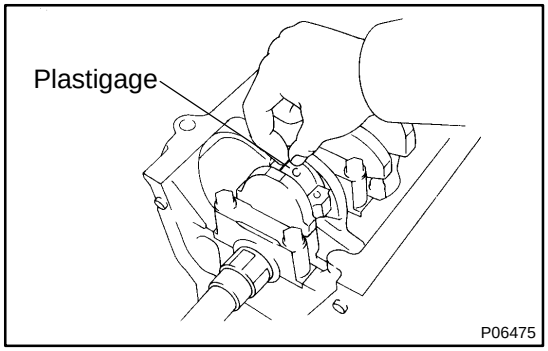

(h) Remove the 2 bolts, connecting rod cap and lower bearing (See procedure (b) and (c) above).

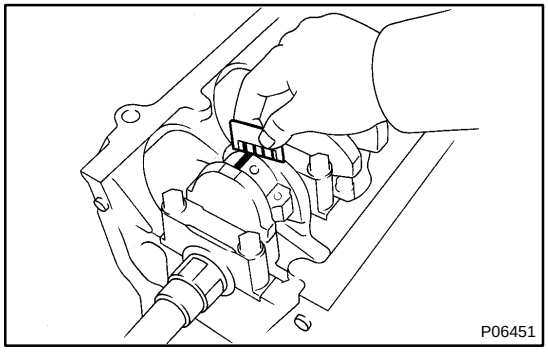

(i) Measure the Plastigage at its widest point.

Standard oil clearance:
STD
0.020 - 0.048 mm (0.0008 - 0.0019 in.)
U/S 0.25
0.019 - 0.058 mm (0.0007 - 0.0022 in.)
Maximum oil clearance:
0.08 mm (0.0031 in.)

If the oil clearance is greater than maximum, replace the bearings. If necessary, grind or replace the crankshaft.

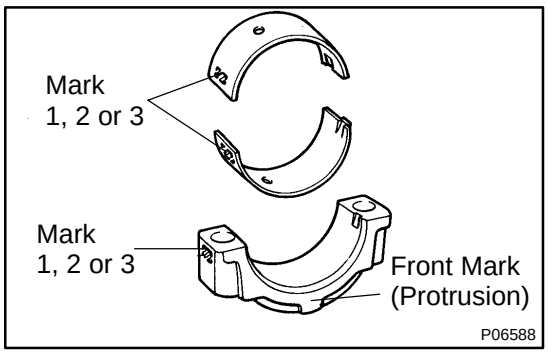

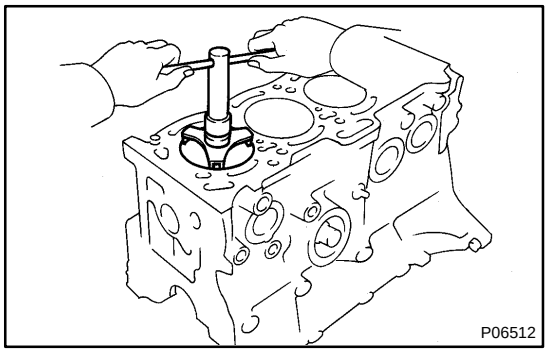

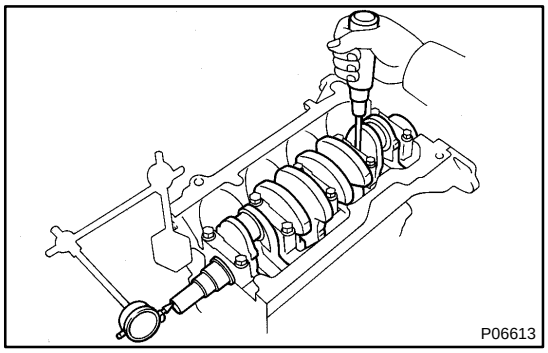

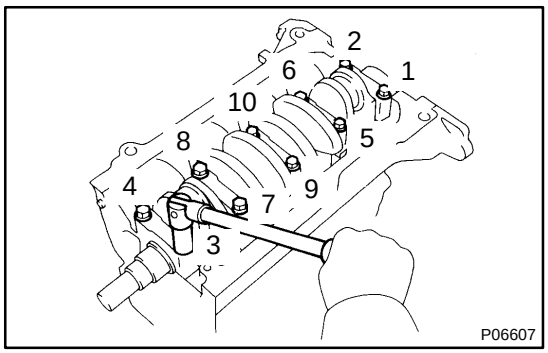

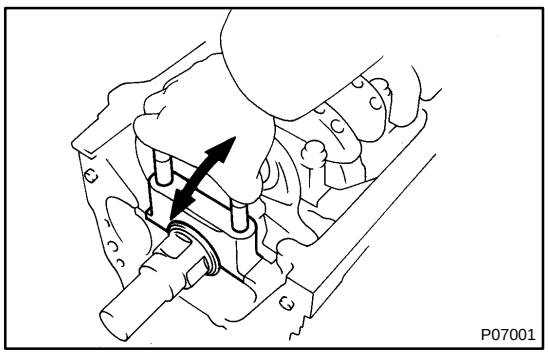

HINT:

If using a standard bearing, replace it with one having the same number marked on the connecting rod cap. There are 3 sizes of standard bearings, marked "1", "2" and "3" accordingly.

Standard sized bearing center wall thickness:

Mark 1	1.486 - 1.490 mm (0.0585 - 0.0587 in.)
Mark 2	1.490 - 1.494 mm (0.0587 - 0.0588 in.)
Mark 3	1.494 - 1.498 mm (0.0588 - 0.0590 in.)

(j) Completely remove the Plastigage.

18. REMOVE PISTON AND CONNECTING ROD ASSEMBLIES

(a) Using a ridge reamer, remove all the carbon from the top of the cylinder.

(b) Push the piston, connecting rod assembly and upper bearing through the top of the cylinder block.

HINT:

- Keep the bearings, connecting rod and cap together.
- Arrange the piston and connecting rod assemblies in correct order.

19. CHECK CRANKSHAFT THRUST CLEARANCE

Using a dial indicator, measure the thrust clearance while prying the crankshaft back and forth with a screwdriver.

Thrust clearance:

STD	0.015 - 0.220 mm (0.0006 - 0.0087 in.)
Maximum	0.30 mm (0.0118 in.)

If the thrust clearance is greater than maximum, replace the thrust washers as a set.

Thrust washer thickness:

2.440 - 2.490 mm (0.0961 - 0.0980 in.)

20. REMOVE MAIN BEARING CAPS AND CHECK OIL CLEARANCE

(a) Uniformly loosen and remove the main bearing cap bolts, in several passes, in the sequence shown.

(b) Using the removed main bearing cap bolts, pry the main bearing cap back and forth, and remove the main bearing caps, lower bearings and lower thrust washers (No.3 main bearing cap only).

HINT:

- Keep the lower bearing and main bearing cap together.
- Arrange the main bearing caps and lower thrust washers in correct order.

(c) Lift out the crankshaft.

HINT:

Keep the upper bearings and upper thrust washers together with the cylinder block.

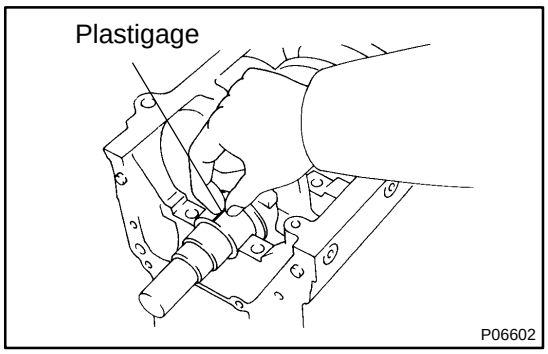

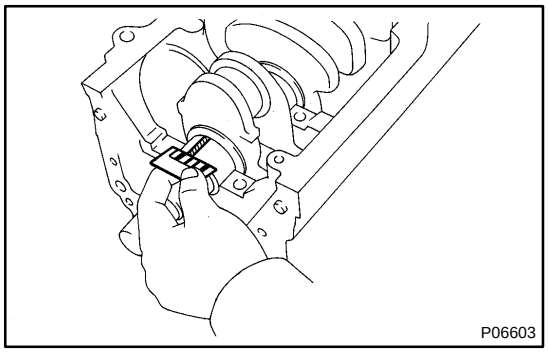

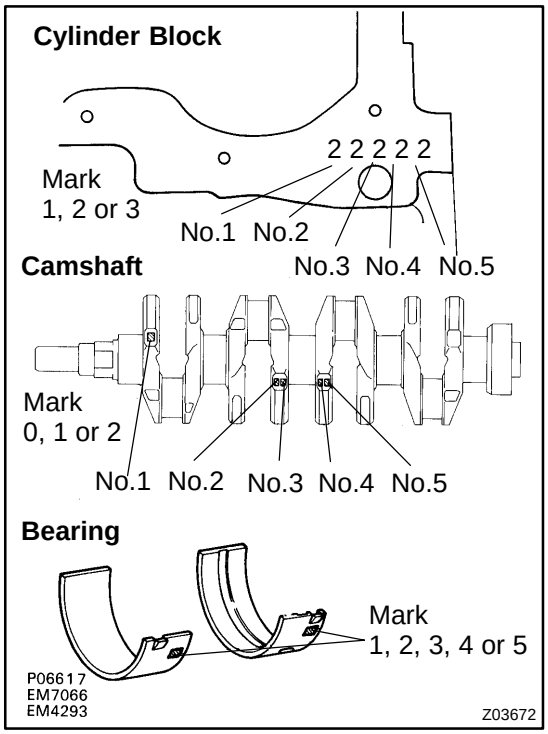

(d) Clean each main journal and bearing.
(e) Check each main journal and bearing for pitting and scratches.

If the journal or bearing is damaged, replace the bearings. If necessary, grind or replace the crankshaft.

(f) Place the crankshaft on the cylinder block.
(g) Lay a strip of Plastigage across each journal.
(h) Install the main bearing caps.
(See page EM-85)

NOTICE:

Do not turn the crankshaft.

(i) Remove the main bearing caps.
(See procedure (a) and (b) above)
(j) Measure the Plastigage at its widest point.

Standard clearance:

STD	0.015 - 0.033 mm (0.0006 - 0.0013 in.)
U/S 0.25	0.016 - 0.056 mm (0.0006 - 0.0022 in.)

Maximum clearance:
0.08 mm (0.0031 in.)

HINT:

If replacing the cylinder block subassembly, the bearing standard clearance will be:

0.015 - 0.045 mm (0.0006 - 0.0018 in.)

If the oil clearance is greater than maximum, replace the bearings. If necessary, grind or replace the crankshaft.

HINT:

If using a standard bearing, replace it with one having the same number. If the number of the bearing cannot be determined, select the correct bearing by adding together the numbers imprinted on the cylinder block and crankshaft, then selecting the bearing with the same number as the total. There are 5 sizes of standard bearings, marked "1", "2", "3", "4" and "5" accordingly.

	Number marked								
Cylinder block	1			2			3		
Crankshaft	0	1	2	0	1	2	0	1	2
Use bearing	1	2	3	2	3	4	3	4	5

EXAMPLE: Cylinder block "2" + Crankshaft "1"
= Total number 3 (Use bearing "3")

Reference:

Cylinder block main journal bore diameter:

Mark 1	52.025 - 52.031 mm (2.0482 - 2.0485 in.)
Mark 2	52.031 - 52.037 mm (2.0485 - 2.0487 in.)
Mark 3	52.037 - 52.043 mm (2.0487 - 2.0489 in.)

Crankshaft journal diameter:

Mark 0	47.994 - 48.000 mm (1.8895 - 1.8898 in.)
Mark 1	47.988 - 47.994 mm (1.8893 - 1.8895 in.)
Mark 2	47.982 - 47.988 mm (1.8891 - 1.8893 in.)

Standard sized bearing center wall thickness:

Mark 1	2.002 - 2.005 mm (0.0788 - 0.0789 in.)
Mark 2	2.005 - 2.008 mm (0.0789 - 0.0791 in.)
Mark 3	2.008 - 2.011 mm (0.0791 - 0.0792 in.)
Mark 4	2.011 - 2.014 mm (0.0792 - 0.0793 in.)
Mark 5	2.014 - 2.017 mm (0.0793 - 0.0794 in.)

(k) Completely remove the Plastigage.

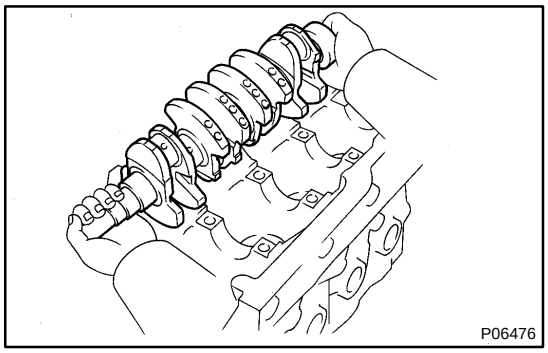

21. REMOVE CRANKSHAFT

(a) Lift out the crankshaft.

(b) Remove the upper bearings and upper thrust washers from the cylinder block.

HINT:

Arrange the main bearing caps, bearings and thrust washers in correct order.

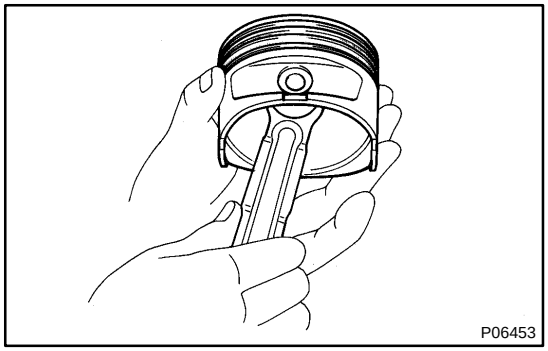

22. CHECK FIT BETWEEN PISTON AND PISTON PIN

Try to move the piston back and forth on the piston pin.

If any movement is felt, replace the piston and pin as a set.

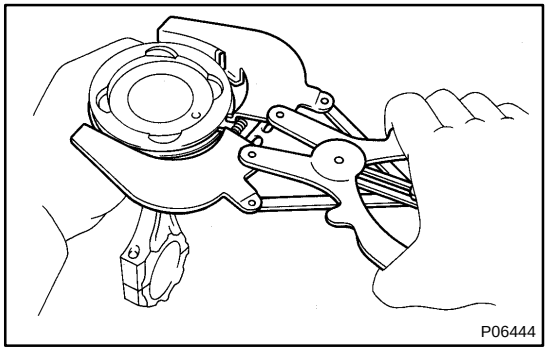

23. REMOVE PISTON RINGS

(a) Using a piston ring expander, remove the 2 compression rings.

(b) Remove the 2 side rails and oil ring by hand.

HINT:

Arrange the piston rings in correct order only.

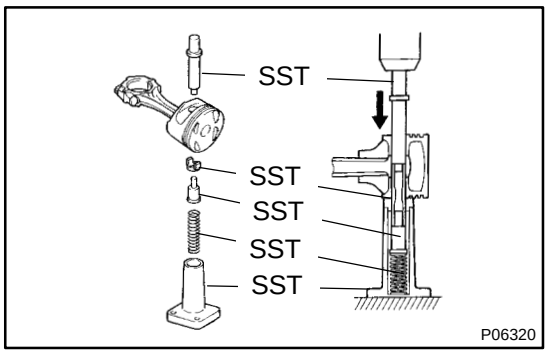

24. DISCONNECT CONNECTING ROD FROM PISTON

Using SST, press out the piston pin from the piston. Remove the connecting rod.

SST 09221-25024 (09221-00020, 09221-00030, 09221-00130, 09221-00140, 09221-00200)

HINT:

- The piston and pin are a matched set.
- Arrange the pistons, pins, rings, connecting rods and bearings in correct order.

CH0E6-02

DISASSEMBLY

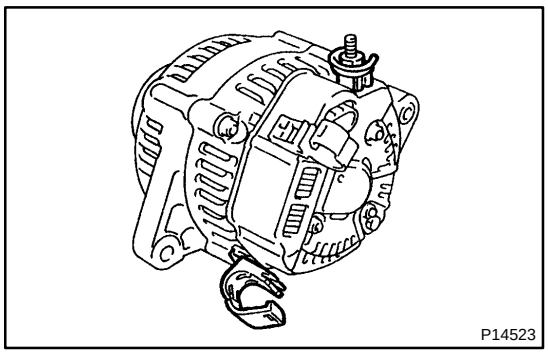

1. REMOVE REAR END COVER

(a) Remove the nut and terminal insulator.

(b) Remove the clamp from the wire clip on the rectifier end frame.

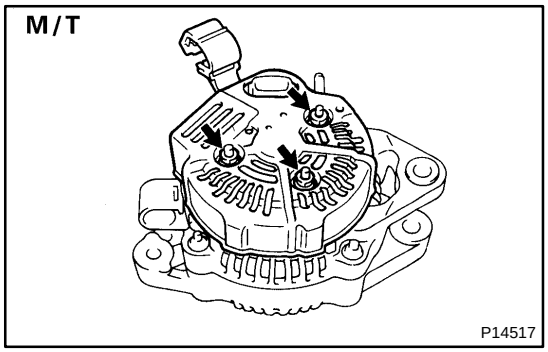

(c) M/T:
Remove the 3 nuts and end cover.

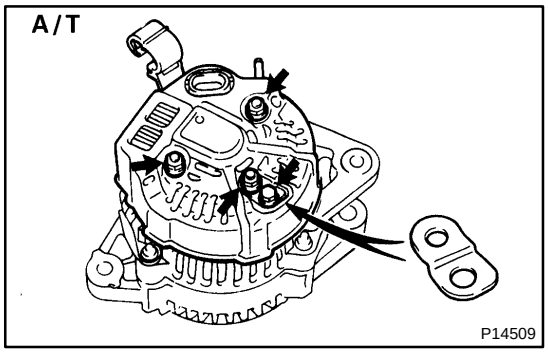

(d) A/T:
Remove the bolt, 3 nuts, plate terminal and end cover.

(e) Remove the wire clamp from the end cover.

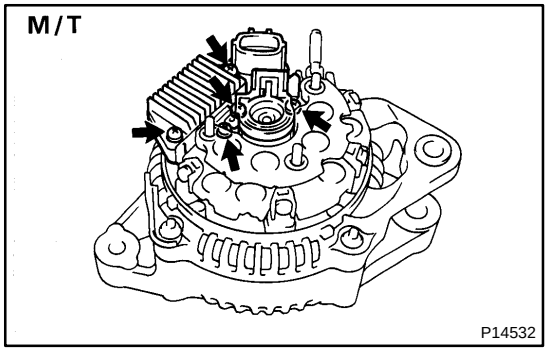

2. M/T:
REMOVE BRUSH HOLDER AND VOLTAGE REGULATOR

(a) Remove the 5 screws, brush holder and voltage regulator.

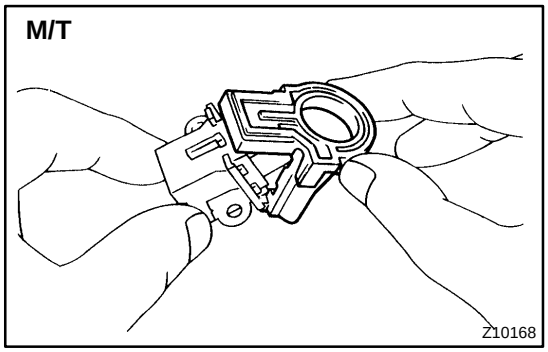

(b) Remove the brush holder cover from the brush holder.

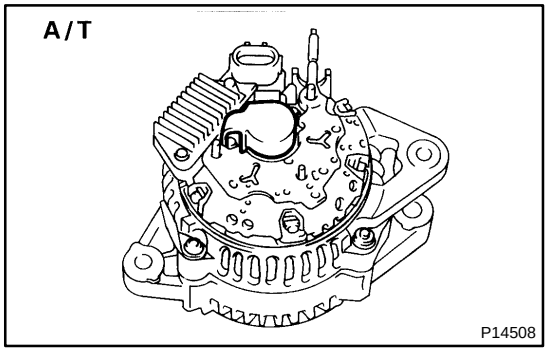

3. A/T:
REMOVE BRUSH HOLDER AND VOLTAGE REGULATOR

(a) Remove the brush holder cover from the brush holder.

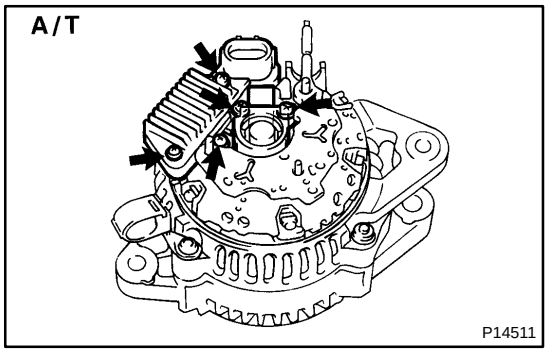

(b) Remove the 5 screws, brush holder and voltage regulator.

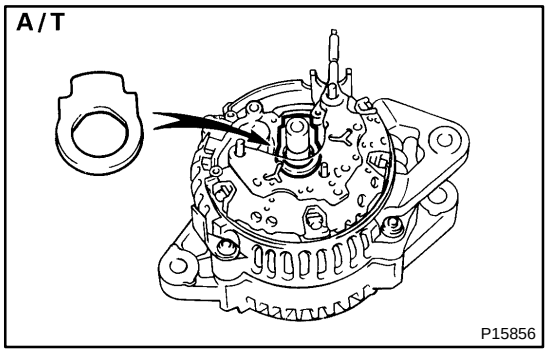

(c) Remove the seal plate from the rectifier end frame.

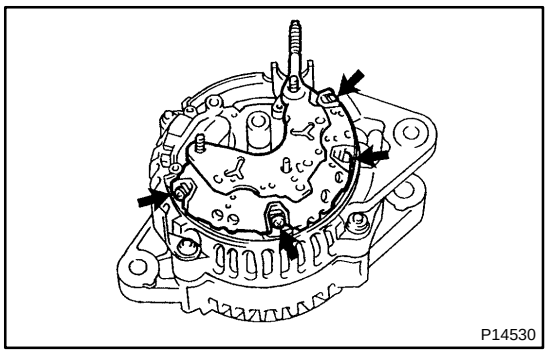

4. REMOVE RECTIFIER HOLDER

(a) Remove the 4 screws and rectifier holder.

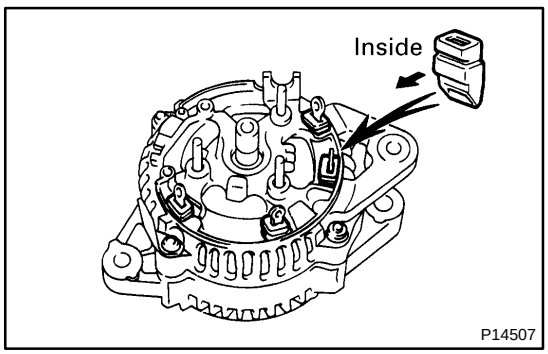

(b) Remove the 4 rubber insulators.

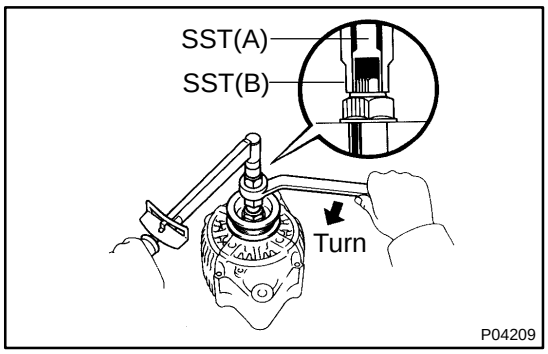

5. REMOVE PULLEY

(a) Hold SST (A) with a torque wrench, and tighten SST (B) clockwise to the specified torque.
SST 09820-63010
Torque: 39 N·m (400 kgf·cm, 29 ft·lbf)

(b) Check that SST (A) is secured to the rotor shaft.

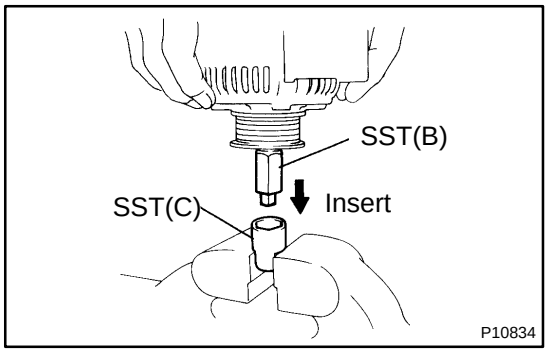

(c) Mount SST (C) in a vise.

(d) Insert SST (B) into SST (C), and attach the pulley nut to SST (C).

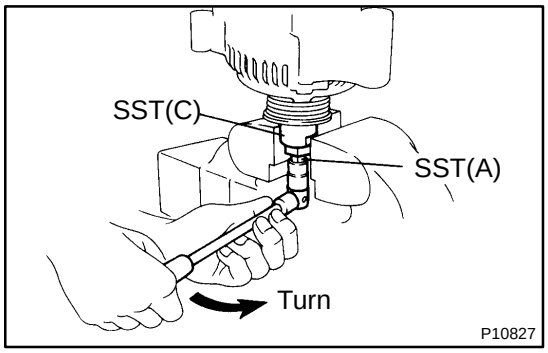

(e) To loosen the pulley nut, turn SST (A) in the direction shown in the illustration.

NOTICE:

To prevent damage to the rotor shaft, do not loosen the pulley nut more than one-half of a turn.

(f) Remove the generator from SST (C).

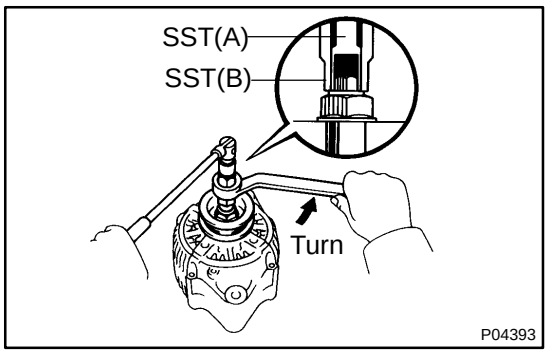

(g) Turn SST (B), and remove SST (A and B).

(h) Remove the pulley nut and pulley.

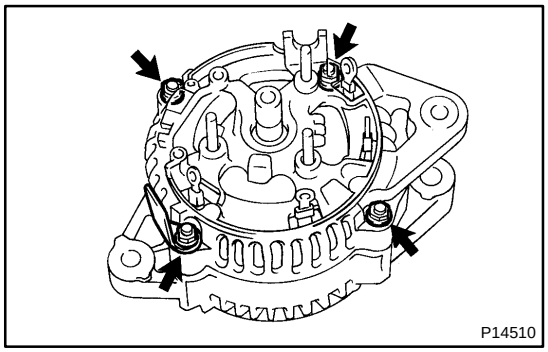

6. REMOVE RECTIFIER END FRAME

(a) Remove the 4 nuts and wire clip.

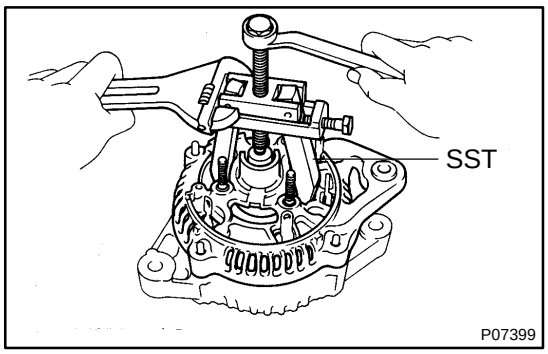

(b) Using SST, remove the rectifier end frame.
SST 09286-4601 1

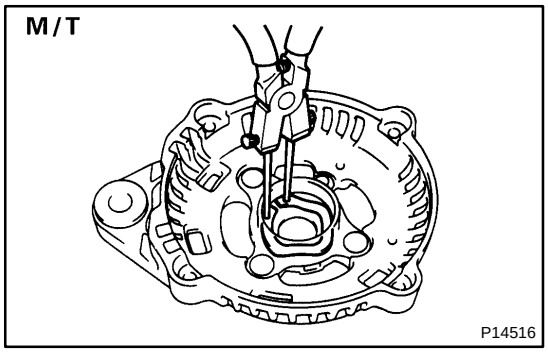

(c) M/T:
Using snap ring pliers, remove the generator washer from the rectifier end frame.

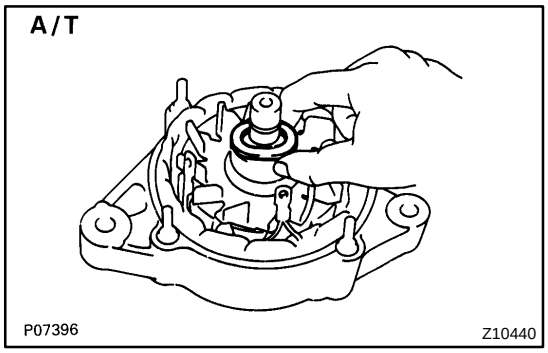

(d) A/T:
Remove the generator washer from the rotor.

7. REMOVE ROTOR FROM DRIVE END FRAME

SR16X-02

DISASSEMBLY

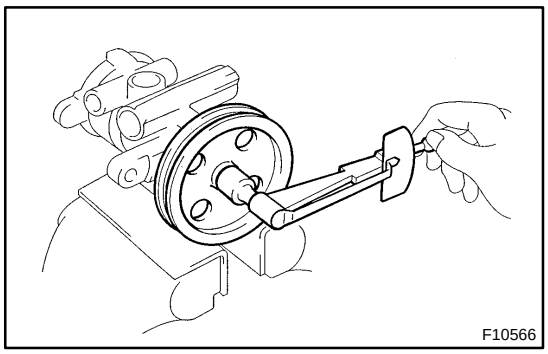
F10566

NOTICE:

When using a vise, do not overtighten it.

1. MEASURE PS VANE PUMP ROTATING TORQUE

(a) Check that the pump rotates smoothly without abnormal noise.

(b) Using a torque wrench, check the pump rotating torque.

Rotating torque:

0.3 N·m (2.8 kgf·cm, 2.4 in.·lbf) or less

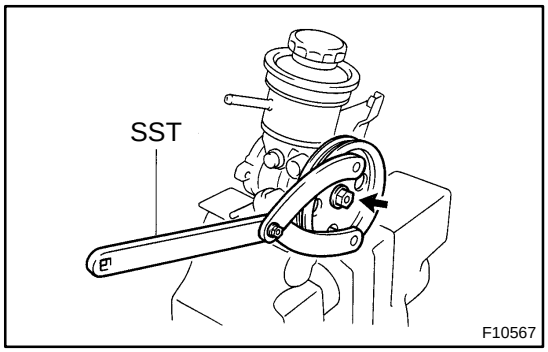

F10567

2. REMOVE VANE PUMP PULLEY

(a) Using SST to stop the pulley rotating, remove the nut.

SST 09960-10010 (09962-01000, 09963-01000)

(b) Remove the woodruff key from the vane pump shaft.

3. REMOVE AIR CONTROL VALVE

Remove the union seat.

4. REMOVE BRACKET AND OIL RESERVOIR

(a) Remove the 4 bolts.

(b) Remove the O-ring from the reservoir.

Remove the union bolt and 2 gaskets.

5. REMOVE PRESSURE PORT UNION

Remove the O-ring from the union.

6. REMOVE FLOW CONTROL VALVE AND SPRING

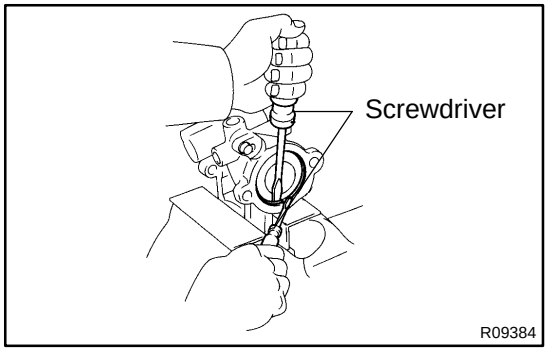

R09384

7. REMOVE REAR HOUSING AND WAVE WASHER

(a) Using 2 screwdrivers, remove the snap ring.

NOTICE:

Be careful not to damage the front and rear housing.

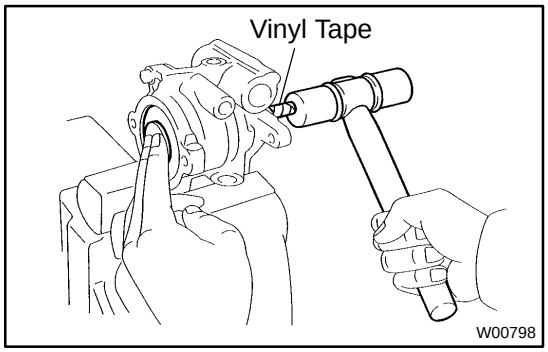

W00798

(b) Wind vinyl tape on the pump shaft.

(c) Using a plastic hammer, tap out the housing and washer.

(d) Remove the O-ring from the housing.

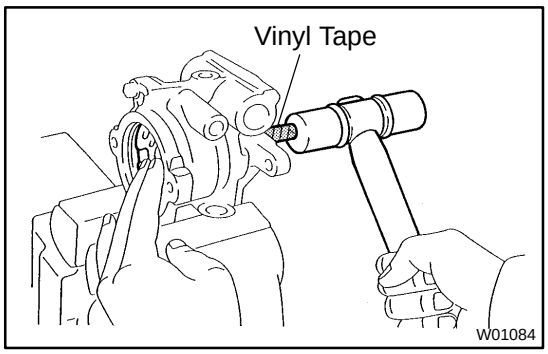

8. REMOVE SIDE REAR PLATE

(a) Using a plastic hammer, tap out the plate.

(b) Remove the O-ring from the plate.

9. REMOVE CAM RING AND 10 VANE PLATES

NOTICE:

Be careful not to drop the vane plate.

10. REMOVE VANE PUMP SHAFT WITH VANE PUMP ROTOR AND SIDE FRONT PLATE

11. REMOVE LONGER STRAIGHT PIN

Remove the pin from the front housing.

12. REMOVE VANE PUMP ROTOR AND SIDE FRONT PLATE

(a) Using a screwdriver, remove the snap ring from the vane pump shaft.

(b) Remove the 2 O-rings from the plate.

13. REMOVE SHORTER STRAIGHT PIN

Remove the pin from the side front plate.

SA12U-02

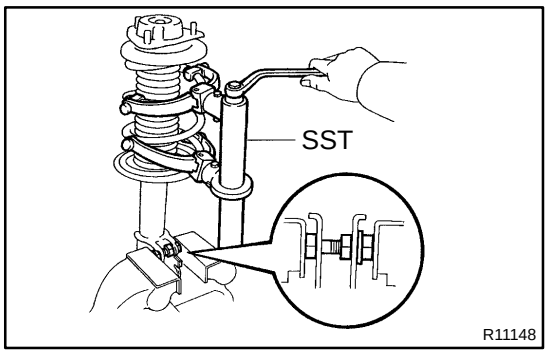

DISASSEMBLY

REMOVE COIL SPRING

(a) Install 2 nuts and a bolt to the bracket at the lower portion of the shock absorber and secure it in a vise.

(b) Using SST, compress the coil spring.
SST 09727-30020

NOTICE:

- **Do not use an impact wrench. It will damage the SST.**
- **When holding the shock absorber with the coil spring removed, do not hold it by the spring lower seat. Also, do not knock the spring lower seat.**

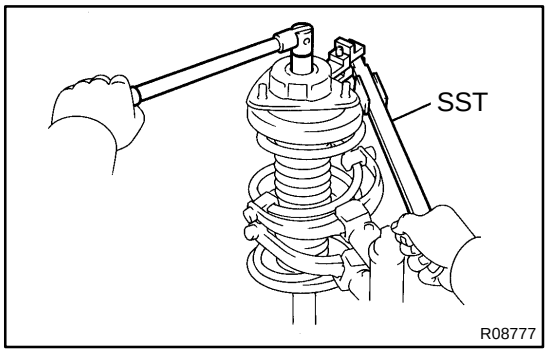

(c) Using SST to hold the suspension support, remove the nut.
SST 09729-22031

(d) Remove the suspension support.

(e) Remove the bearing.

(f) Remove the upper spring seat.

(g) Remove the upper coil spring insulator.

(h) Remove the coil spring.

(i) Remove the dust cover.

(j) Remove the spring bumper.

(k) Remove the lower coil spring insulator.

NOTICE:

When removing or installing the shock absorber, if the bearing becomes separated in any way, it must be replaced by a new bearing.

EM0JI-02

DISASSEMBLY

1. INSTALL ENGINE TO ENGINE STAND FOR DISASSEMBLY

2. REMOVE PS PUMP BRACKET

Remove the 3 bolts and PS pump bracket.

3. REMOVE TIMING BELT AND PULLEYS
(See page EM-13)

4. REMOVE CYLINDER HEAD
(See page EM-29)

5. REMOVE OIL PAN AND OIL PUMP
(See page LU-7)

6. REMOVE OIL COOLER
(See page LU-17)

7. REMOVE KNOCK SENSOR 1
(See page SF-55)

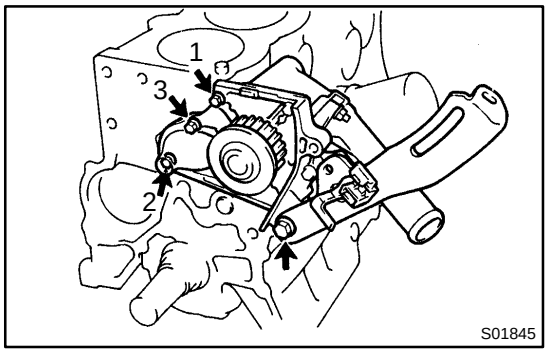

8. REMOVE GENERATOR DRIVE BELT ADJUSTING BAR, WATER PUMP AND WATER PUMP COVER ASSEMBLY

(a) Remove the bolt and adjusting bar.

(b) Remove the 3 bolts in the sequence shown, remove the water pump, water pump cover assembly and O-ring.

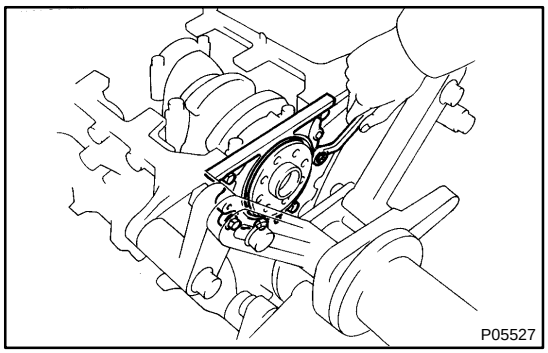

9. REMOVE REAR OIL SEAL RETAINER

Remove the 6 bolts, retainer and gasket.

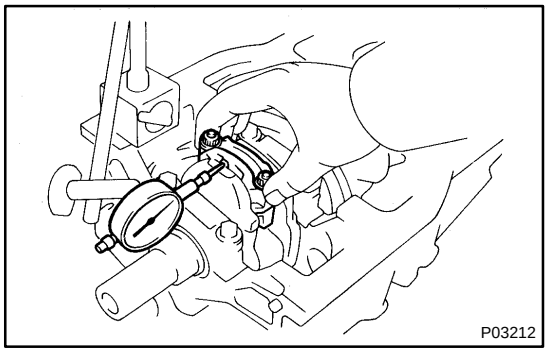

10. CHECK CONNECTING ROD THRUST CLEARANCE

Using a dial indicator, measure the thrust clearance while moving the connecting rod back and forth.

Standard thrust clearance:
0.160 - 0.312 mm (0.0063 - 0.0123 in.)
Maximum thrust clearance:
0.35 mm (0.0138 in.)

If the thrust clearance is greater than maximum, replace the connecting rod assembly. If necessary, replace the crankshaft.

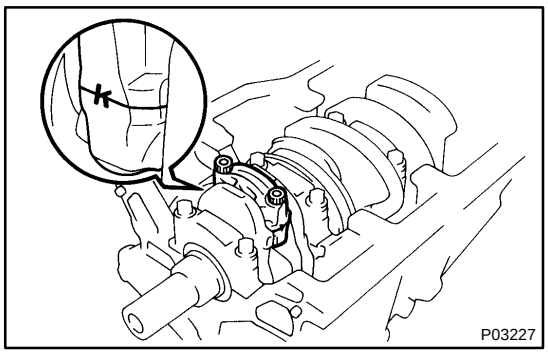

11. REMOVE CONNECTING ROD CAPS AND CHECK OIL CLEARANCE

(a) Check the matchmarks on the connecting rod and cap to ensure correct reassembly.

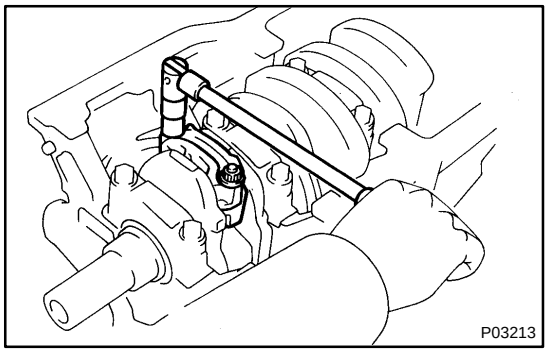

(b) Remove the 2 connecting rod cap nuts.

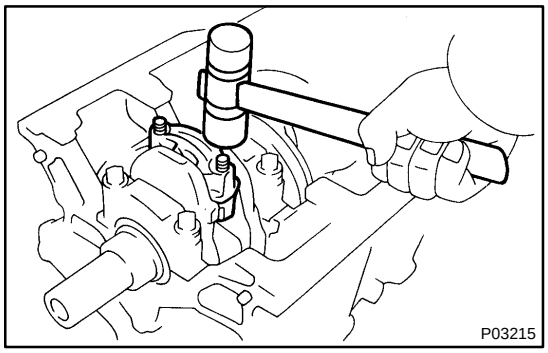

(c) Using a plastic-faced hammer, lightly tap the connecting rod bolts and lift off the connecting rod cap.

HINT:
Keep the lower bearing inserted with the connecting rod cap.

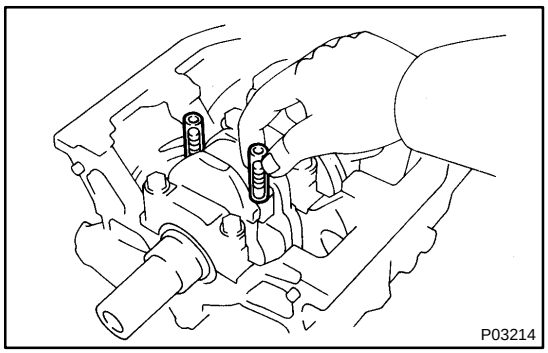

(d) Cover the connecting rod bolts with a short piece of hose to protect the crankshaft from damage.

(e) Clean the crank pin and bearing.

(f) Check the crank pin and bearing for pitting and scratches.

If the crank pin or bearing is damaged, replace the bearings. If necessary, grind or replace the crankshaft.

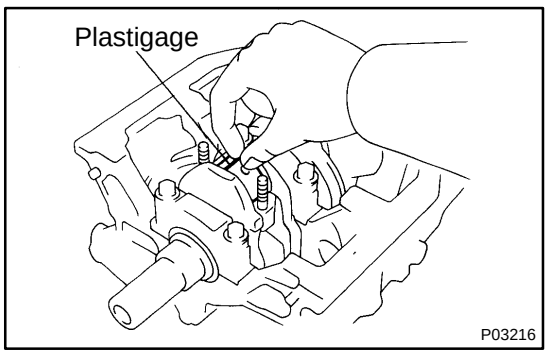

(g) Lay a strip of Plastigage across the crank pin.

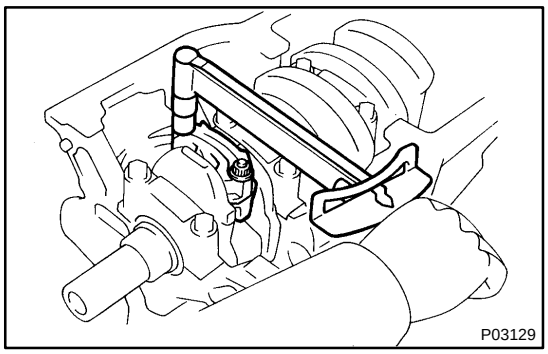

(h) Install the connecting rod cap.
(See page EM-109)

NOTICE:
Do not turn the crankshaft.

(i) Remove the connecting rod cap.

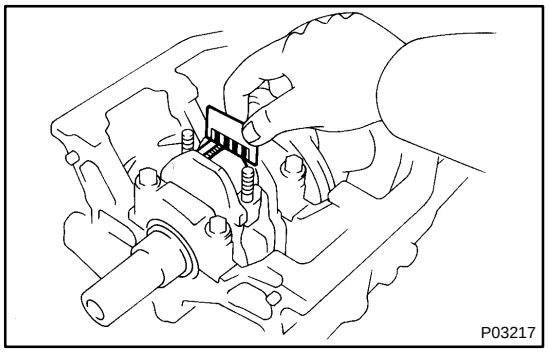

(j) Measure the Plastigage at its widest point.
Standard oil clearance:

STD	0.024 - 0.055 mm (0.0009 - 0.0022 in.)
U/S 0.25	0.023 - 0.069 mm (0.0009 - 0.0027 in.)

Maximum oil clearance: 0.08 mm (0.0031 in.)

If the oil clearance is greater than maximum, replace the bearings. If necessary, grind or replace the crankshaft.

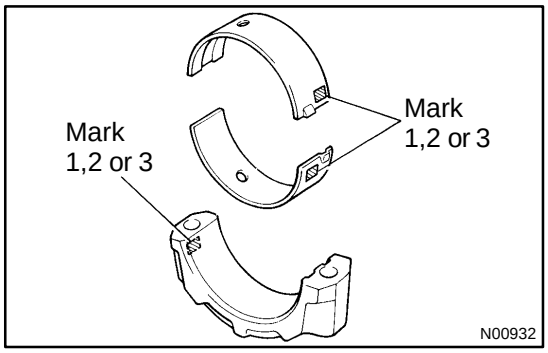

HINT:
If using a standard bearing, replace it with one having the same number marked on the connecting rod cap. There are 3 sizes of standard bearings, marked "1", "2" and "3" accordingly.

Reference
Standard sized bearing center wall thickness:

Mark "1"	1.484 - 1.488 mm (0.0584 - 0.0586 in.)
Mark "2"	1.488 - 1.492 mm (0.0586 - 0.0587 in.)
Mark "3"	1.492 - 1.496 mm (0.0587 - 0.0589 in.)

(k) Completely remove the Plastigage.

12. REMOVE PISTON AND CONNECTING ROD ASSEMBLIES

(a) Using a ridge reamer, remove all the carbon from the top of the cylinder.

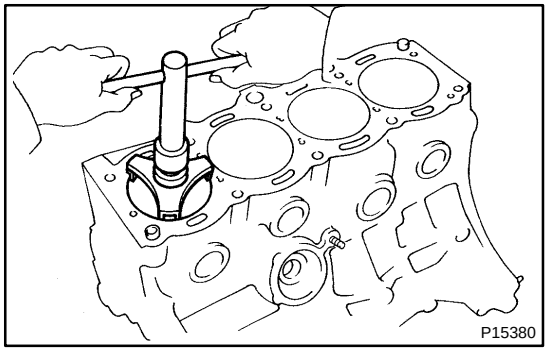

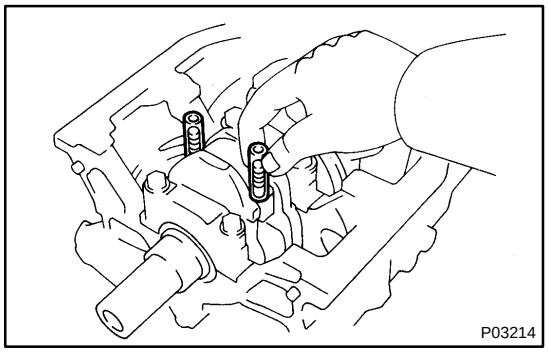

(b) Cover the connecting rod bolts with a short piece of hose to protect the crankshaft from damage.

(c) Push the piston, connecting rod assembly and upper bearing through the top of the cylinder block.

HINT:

- Keep the bearings, connecting rod and cap together.
- Arrange the piston and connecting rod assemblies in the correct order.

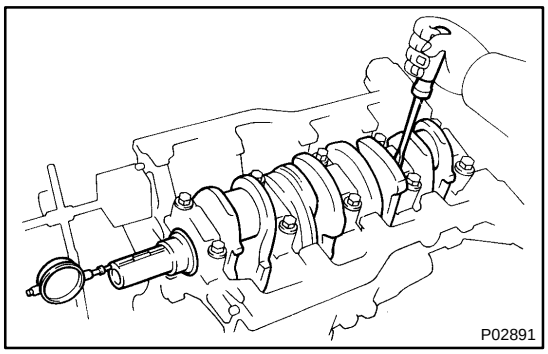

13. CHECK CRANKSHAFT THRUST CLEARANCE

Using a dial indicator, measure the thrust clearance while prying the crankshaft back and forth with a screwdriver.

Standard thrust clearance:
0.020 - 0.220 mm (0.0008 - 0.0087 in.)
Maximum thrust clearance:
0.30 mm (0.0118 in.)

If the thrust clearance is greater than maximum, replace the thrust washer as a set.

Thrust washer thickness:
2.440 - 2.490 mm (0.0961 - 0.0980 in.)

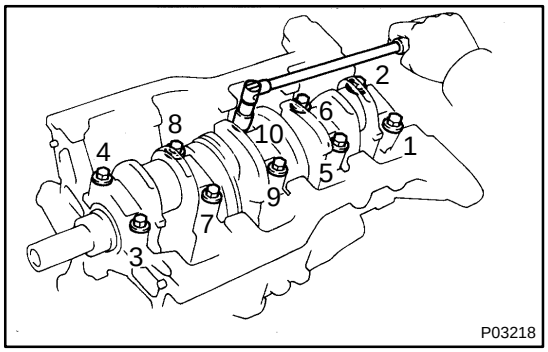

14. REMOVE MAIN BEARING CAPS AND CHECK OIL CLEARANCE

(a) Uniformly loosen and remove the 10 main bearing cap bolts in several passes, in the sequence shown.

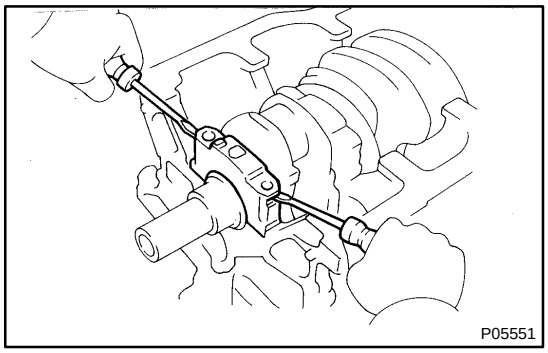

(b) Using 2 screwdrivers, pry out the main bearing cap, and remove the 5 main bearing caps, 5 lower bearings and 2 lower thrust washers (No.3 main bearing cap only).

HINT:

- Keep the lower bearing and main bearing cap together.
- Arrange the main bearing caps and lower thrust washers in the correct order.

(c) Lift out the crankshaft.

HINT:

Keep the upper bearing and upper thrust washers together with the cylinder block.

(d) Clean each main journal and bearing.

(e) Check each main journal and bearing for pitting and scratches.

If the journal or bearing is damaged, replace the bearings. If necessary, grind or replace the crankshaft.

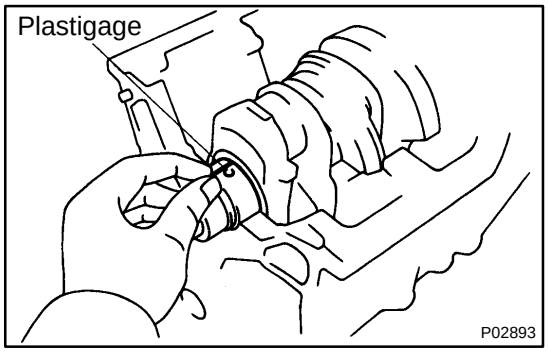

(f) Place the crankshaft on the cylinder block.

(g) Lay a strip of Plastigage across each journal.

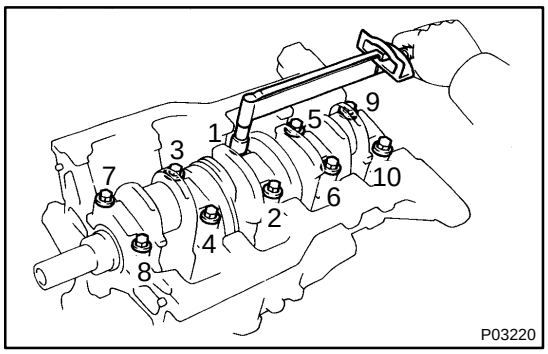

(h) Install the main bearing caps.
(See page EM-109)

NOTICE:

Do not turn the crankshaft.

(i) Remove the main bearing caps.
(See procedure (a) and (b) above)

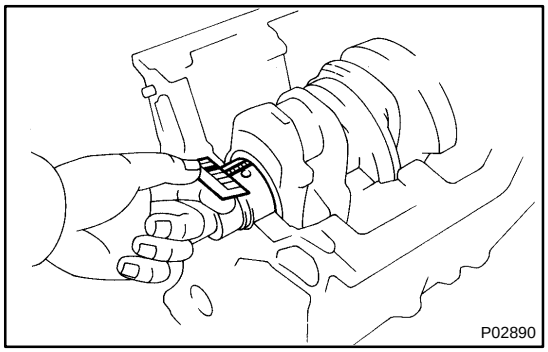

(j) Measure the Plastigage at its widest point.

Standard clearance:

No.3	STD	0.025 - 0.044 mm (0.0010 - 0.0017 in.)
	U/S 0.25	0.027 - 0.067 mm (0.0011 - 0.0026 in.)
Others	STD	0.015 - 0.034 mm (0.0006 - 0.0013 in.)
	U/S 0.25	0.019 - 0.059 mm (0.0007 - 0.0023 in.)

Maximum clearance: 0.08 mm (0.0031 in.)

HINT:

If replacing the cylinder block subassembly, the bearing standard clearance will be:

No.3	0.027 - 0.054 mm (0.0011 - 0.0021 in.)
Others	0.017 - 0.044 mm (0.0007 - 0.0017 in.)

If the oil clearance is greater than maximum, replace the bearings. If necessary, grind or replace the crankshaft.

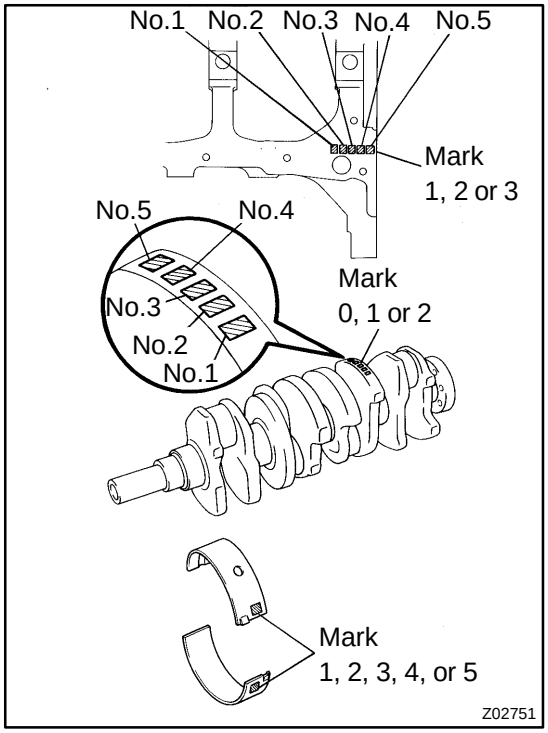

HINT:

If using a standard bearing, replace it with one having the same number. If the number of the bearing cannot be determined, select the correct bearing by adding together the numbers imprinted on the cylinder block and crankshaft, then selecting the bearing with the same number as the total. There are 5 sizes of standard bearings, marked ”1”, ”2”, ”3”, ”4” and ”5” accordingly.

	Number marked								
Cylinder block	1			2			3		
Crankshaft	0	1	2	0	1	2	0	1	2
Use bearing	1	2	3	2	3	4	3	4	5

EXAMPLE: Cylinder block ”2” + Crankshaft ”1”
= Total number 3 (Use bearing ”3”)

Reference

Cylinder block main journal bore diameter:

Mark"1"	59.020-59.026 mm (2.3236-2.3239 in.)
Mark"2"	59.026-59.032 mm (2.3239-2.3241 in.)
Mark"3"	59.032-59.038 mm (2.2341-2.3243 in.)

Crankshaft main journal diameter:

Mark"0"	54.998-55.003 mm (2.1653-2.1655 in.)
Mark"1"	54.993-54.998 mm (2.1651-2.1653 in.)
Mark"2"	54.988-54.993 mm (2.1649-2.1651 in.)

Standard sized bearing center wall thickness:

No.3

Mark"1"	1.992-1.995 mm (0.0784-0.0785 in.)
Mark"2"	1.995-1.998 mm (0.0785-0.0787 in.)
Mark"3"	1.998-2.001 mm (0.0787-0.0788 in.)
Mark"4"	2.001-2.004 mm (0.0788-0.0789 in.)
Mark"5"	2.004-2.007 mm (0.0789-0.0790 in.)

Others

Mark"1"	1.997-2.000 mm (0.0786-0.0787 in.)
Mark"2"	2.000-2.003 mm (0.0787-0.0789 in.)
Mark"3"	2.003-2.006 mm (0.0789-0.0790 in.)
Mark"4"	2.006-2.009 mm (0.0790-0.0791 in.)
Mark"5"	2.009-2.012 mm (0.0791-0.0792 in.)

(k) Completely remove the plastigage.

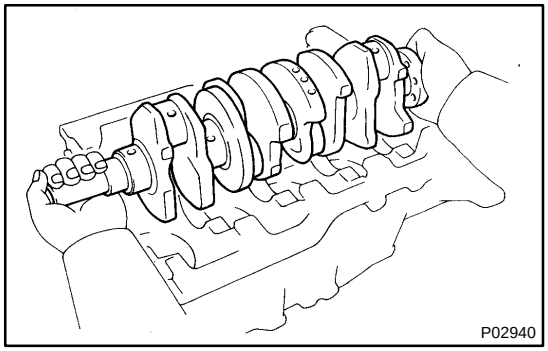

15. REMOVE CRANKSHAFT

(a) Lift out the crankshaft.

(b) Remove the 5 upper bearings and 2 upper thrust washers from the cylinder block.

HINT:

Arrange the main bearing caps, bearings and thrust washers in the correct order.

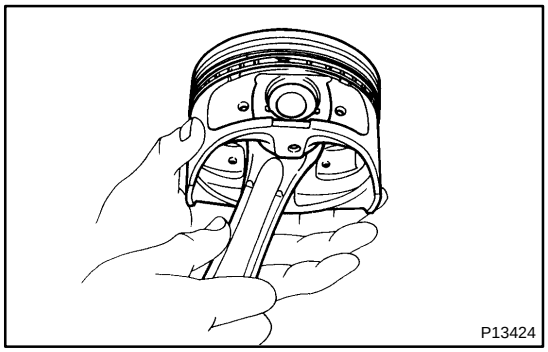

16. CHECK FIT BETWEEN PISTON AND PISTON PIN

Try to move the piston back and forth on the piston pin.

If any movement is felt, replace the piston and pin as a set.

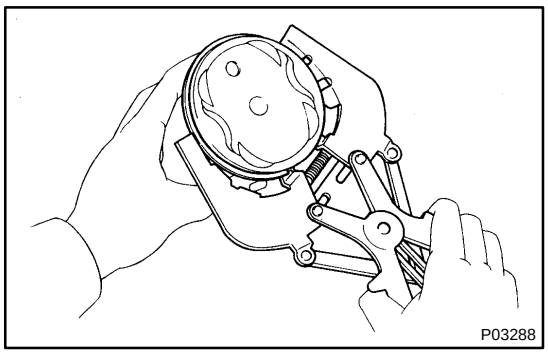

17. REMOVE PISTON RINGS

(a) Using a piston ring expander, remove the No.1 and No.2 piston rings.

(b) Remove the 2 side rails and oil ring expander by hand.

HINT:

Arrange the piston rings in correct order only.

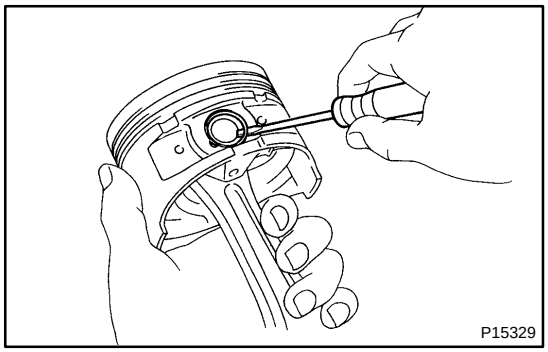

18. DISCONNECT CONNECTING ROD FROM PISTON

(a) Using a small screwdriver, pry out the 2 snap rings.

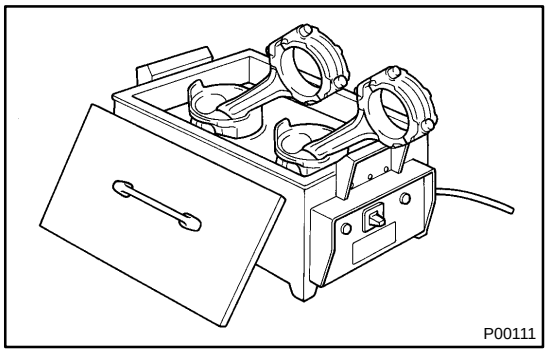

(b) Gradually heat the piston to 80 - 90˚C (176 - 194˚F).

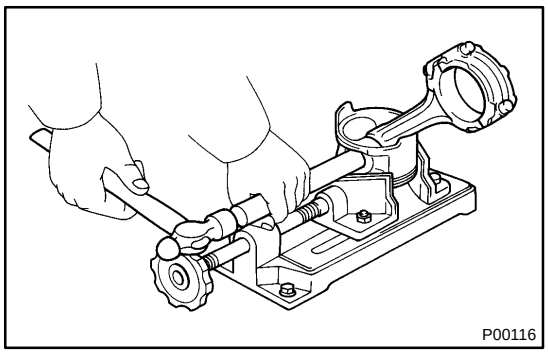

(c) Using a plastic-faced hammer and brass bar, lightly tap out the piston pin and remove the connecting rod.

HINT:

- The piston and pin are a matched set.
- Arrange the pistons, pins, rings, connecting rods and bearings in the correct order.

EM0J9-02

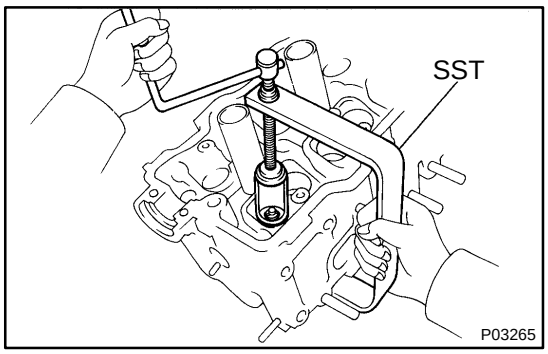

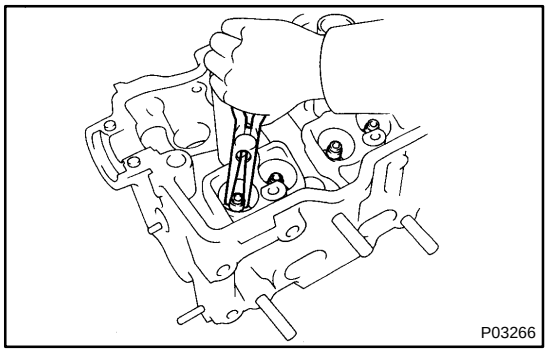

DISASSEMBLY

1. REMOVE VALVE LIFTERS AND SHIMS

HINT:

Arrange the valve lifters and shims in the correct order.

2. REMOVE VALVES

(a) Using SST, compress the valve spring and remove the 2 keepers.

SST 09202-70020 (09202-00010)

(b) Remove these parts:

- Spring retainer
- Valve spring
- Valve
- Spring seat

HINT:

Arrange the valves, valve springs, spring seats and spring retainers in the correct order.

(c) Using needle-nose pliers, remove the oil seal.

IG0LF-01

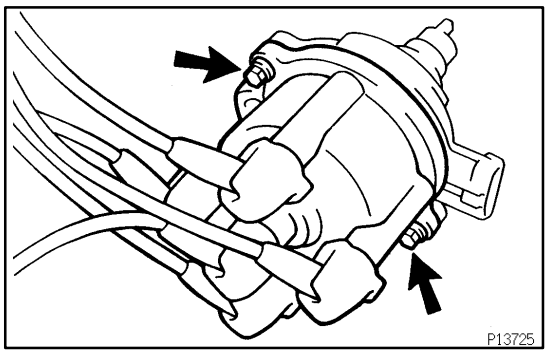

DISASSEMBLY

1. REMOVE DISTRIBUTOR CAP

Remove the 2 bolts, distributor cap and packing.

2. REMOVE ROTOR

Remove the 2 screws and rotor.

CO190-01

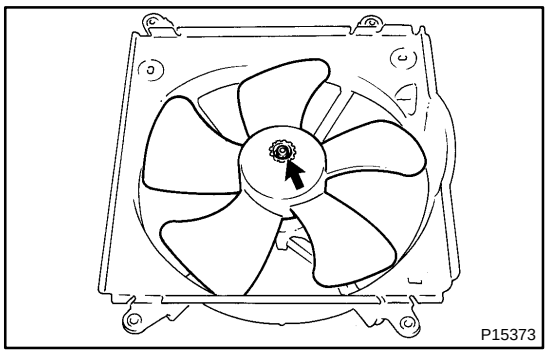

DISASSEMBLY

1. REMOVE NO. 1 COOLING FAN

Remove the nut and fan.

2. REMOVE NO. 1 COOLING FAN MOTOR

(a) Disconnect the wire and connector from the fan shroud.

(b) Remove the 3 screws and fan motor.

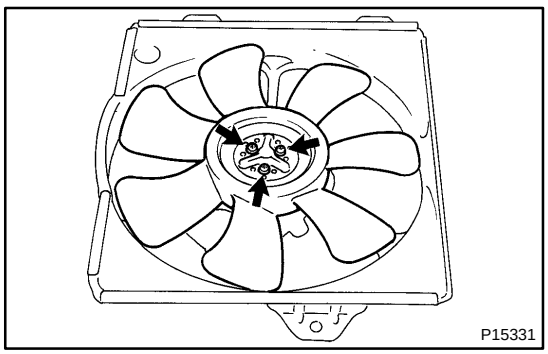

3. REMOVE NO. 2 COOLING FAN

Remove the 3 screws and fan.

4. REMOVE NO. 2 COOLING FAN MOTOR COVER

Remove the 3 screws and fan motor cover.

5. REMOVE NO. 2 COOLING FAN MOTOR

(a) Disconnect the wire and connector from the fan shroud.

(b) Remove the 3 screws and fan motor.

SA24W-01

DISASSEMBLY

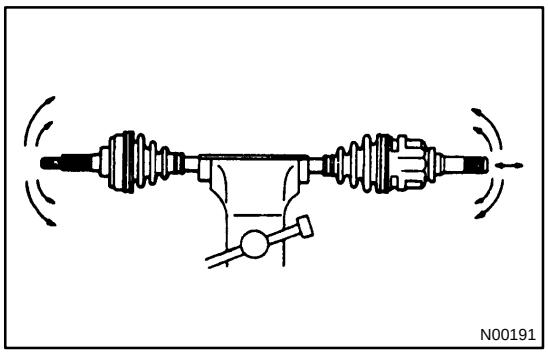
N00191

1. CHECK DRIVE SHAFT

(a) Check to see that there is no play in the outboard joint.

(b) Check to see that the inboard joint slides smoothly in the thrust direction.

(c) Check to see that there is not noticeable play in the radial direction of the inboard joint.

(d) Check for damage to boots.

2. REMOVE INBOARD JOINT BOOT CLAMPS

(a) Using a screwdriver, remove the 2 boot clamps.

(b) Slide the inboard joint boot toward the outboard joint.

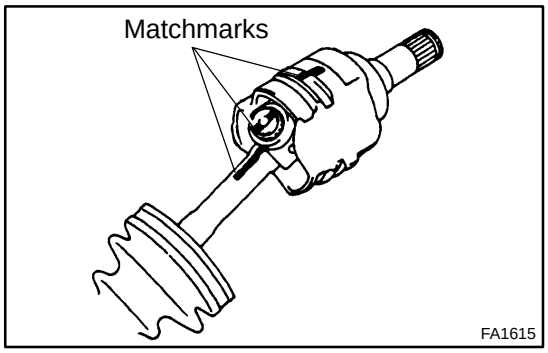

FA1615

3. DISASSEMBLE INBOARD JOINT TULIP

(a) Place matchmarks on the tripod and inboard joint tulip or center drive shaft.

NOTICE:

Do not punch the marks.

(b) Remove the inboard joint tulip or center drive shaft from the drive shaft.

4. REMOVE TRIPOD

(a) Using a snap ring expander, remove the snap ring.

(b) Using a snap ring expander, temporarily slide the snap ring toward the outboard joint side.

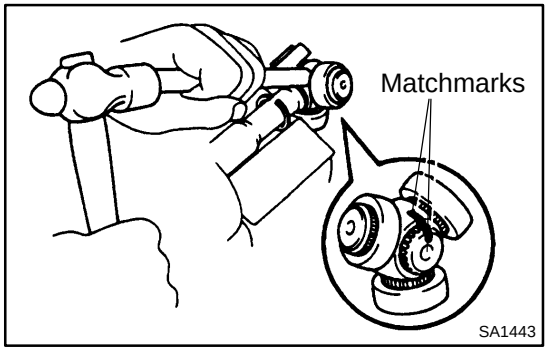

SA1443

(c) Place matchmarks on the drive shaft and tripod.

NOTICE:

Do not punch the marks.

(d) Using a brass bar and hammer, remove the tripod from the drive shaft.

NOTICE:

Do not tap the roller.

(e) Using a snap ring expander, remove the snap ring.

5. REMOVE INBOARD JOINT BOOT

6. w/ DYNAMIC DAMPER (RH DRIVE SHAFT): REMOVE DYNAMIC DAMPER

(a) Using a screwdriver, remove the clamp of the dynamic damper.

(b) Remove the dynamic damper.

7. REMOVE OUTBOARD JOINT BOOT

(a) Using a screwdriver, remove the 2 clamps of the outboard joint boot.

(b) Remove the boot from the outboard joint.

NOTICE:

Do not disassemble the outboard joint.

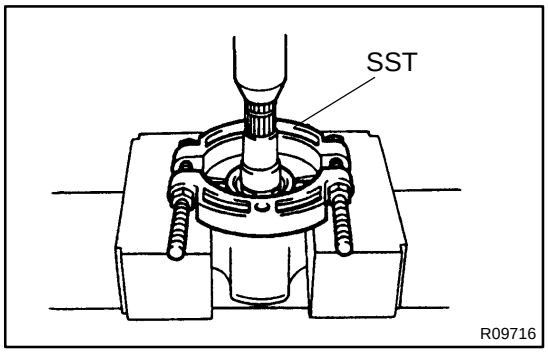

8. LH DRIVE SHAFT: REMOVE DUST COVER

Using SST and a press, remove the dust cover from the inboard joint tulip.

SST 09950-00020

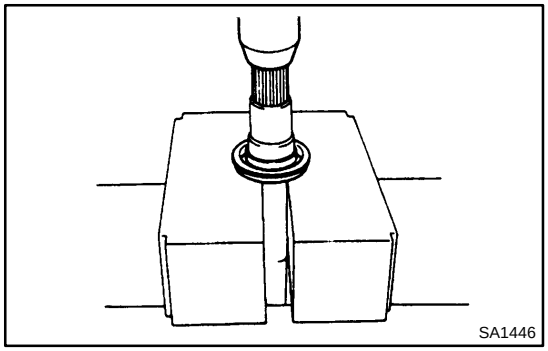

9. RH DRIVE SHAFT: REMOVE DUST COVER

Using a press, remove the dust cover from the center drive shaft.

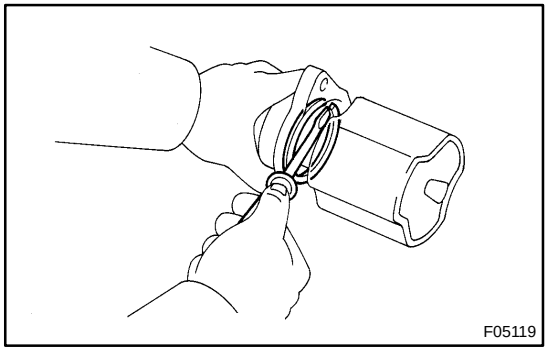

10. RH DRIVE SHAFT: DISASSEMBLE CENTER DRIVE SHAFT

(a) Using a screwdriver, remove the snap ring.

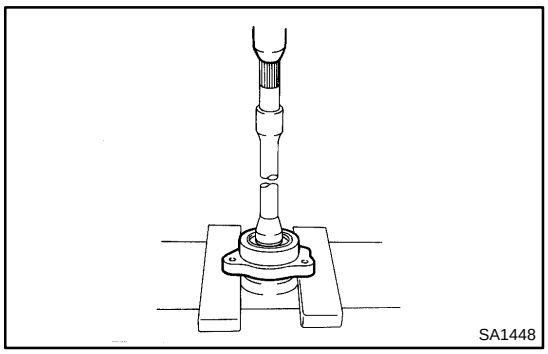

(b) Using a press, remove the bearing case.

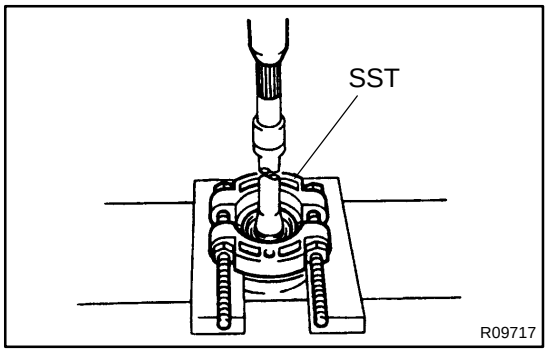

(c) Using SST and a press, remove the dust cover.
SST 09950-00020

(d) Using a snap ring expander, remove the snap ring.

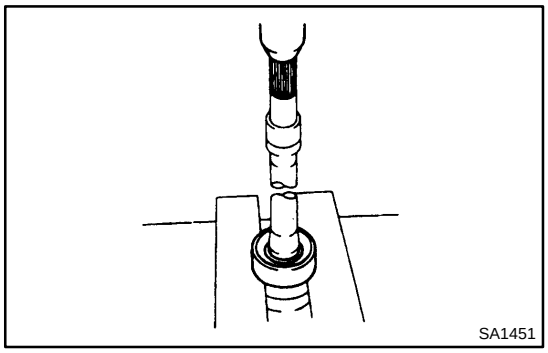

(e) Using a press, remove the bearing.

(f) Using a snap ring expander, remove the snap ring.

(g) Using a pin punch and hammer, remove the straight pin.

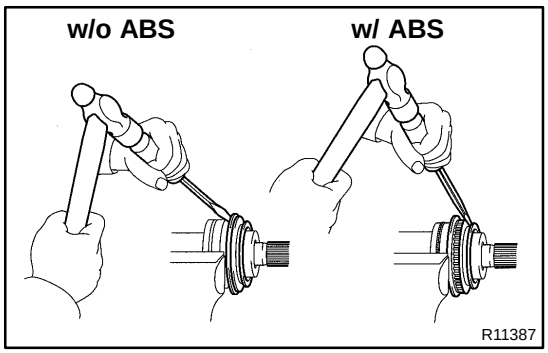

11. REMOVE NO.2 DUST DEFLECTOR

(a) Mount the outboard joint shaft in a soft jaw vise.

(b) Using a screwdriver and hammer, remove the No.2 dust deflector.

NOTICE:

Be careful not to damage the ABS speed sensor rotor.

SF0W9-02

DISASSEMBLY

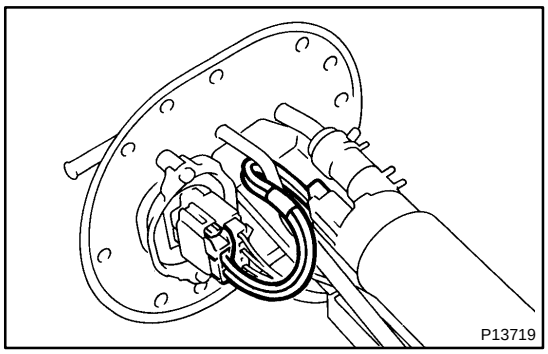

1. REMOVE FUEL PUMP FROM PUMP BRACKET

(a) Remove the lead wire.

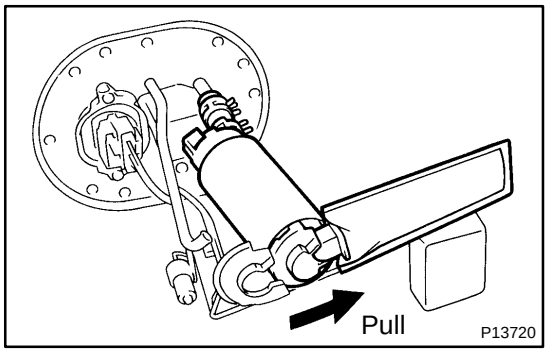

(b) Pull out the lower side of the fuel pump from the pump bracket.
(c) Remove the rubber cushion from the fuel pump.
(d) Disconnect the fuel hose from the fuel pump, and remove the fuel pump.

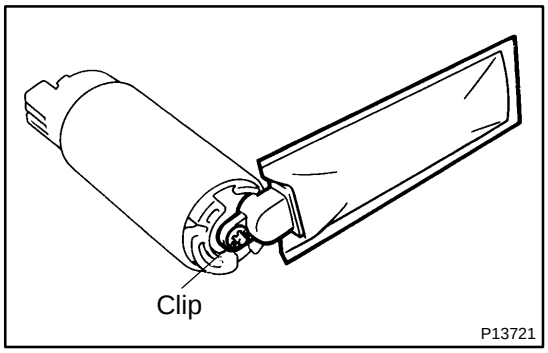

2. REMOVE FUEL PUMP FILTER FROM FUEL PUMP

(a) Remove the clip.
(b) Pull out the pump filter.

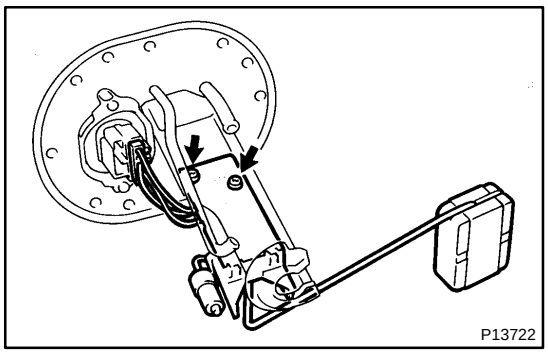

3. REMOVE FUEL SENDER GAUGE FROM FUEL PUMP BRACKET

(a) Disconnect the connector from the fuel pump bracket.
(b) Remove the 2 screws and sender gauge.

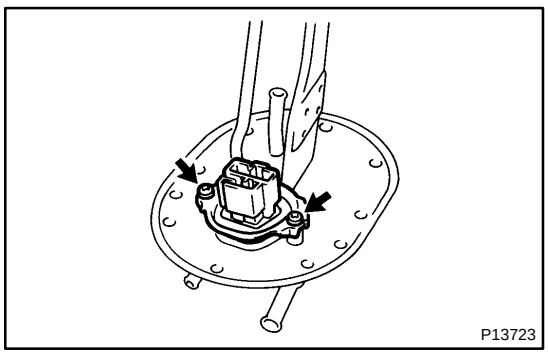

4. REMOVE CONNECTOR

Remove the 2 screws, connector support, connector and gasket.

CH060-02

DISASSEMBLY

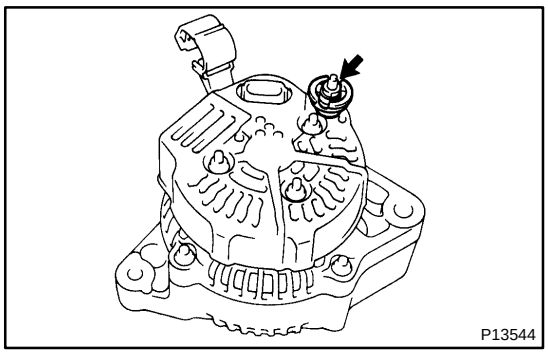

1. REMOVE REAR END COVER

(a) Remove the nut and terminal insulator.

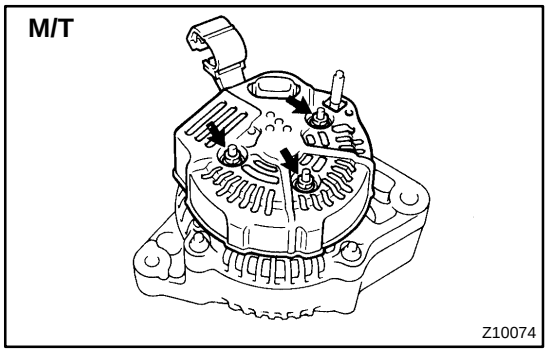

(b) M/T:
Remove the 3 nuts and end cover.

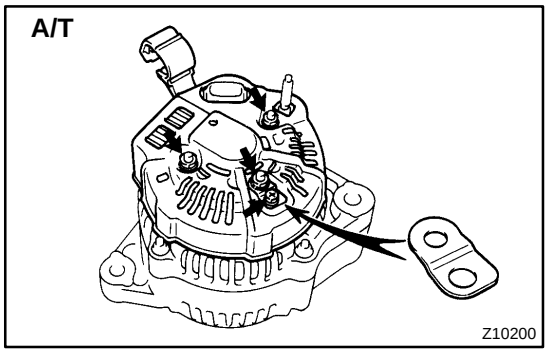

(c) A/T:
Remove the bolt, 3 nuts, plate terminal and end cover.

(d) Remove the wire clamp from the end cover.

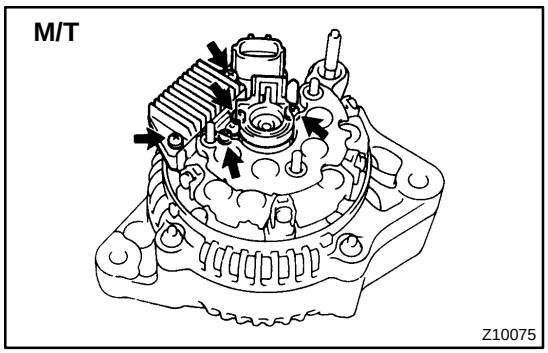

2. M/T:
REMOVE BRUSH HOLDER AND VOLTAGE REGULATOR

(a) Remove the 5 screws, brush holder and voltage regulator.

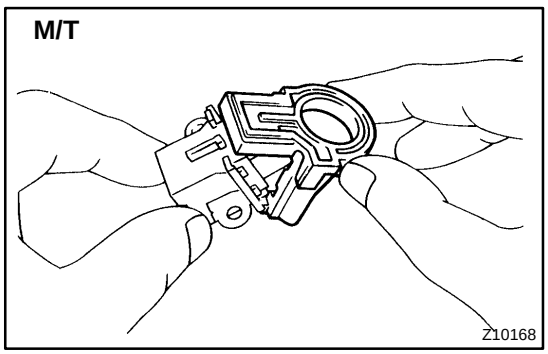

(b) Remove the brush holder cover from the brush holder.

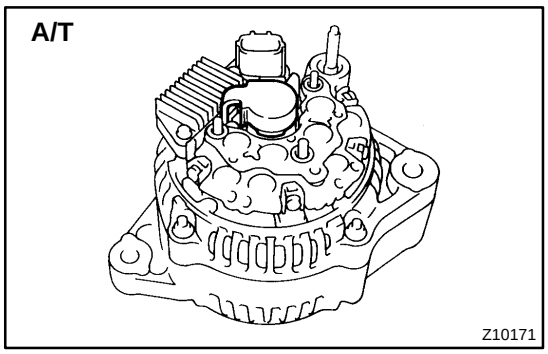

3. A/T

REMOVE BRUSH HOLDER AND VOLTAGE REGULATOR

(a) Remove the brush holder cover from the brush holder.

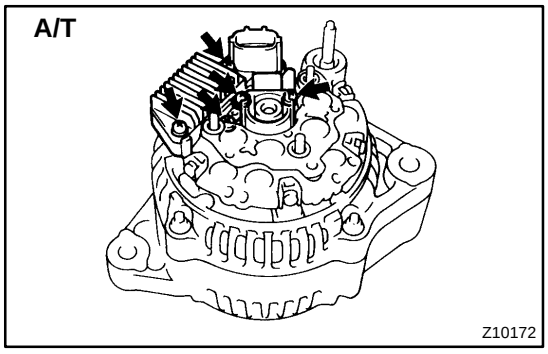

(b) Remove the 5 screws, brush holder and voltage regulator.

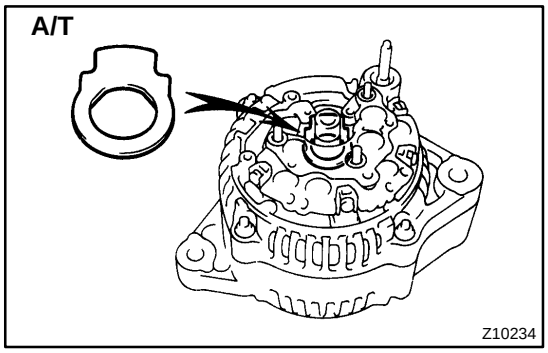

(c) Remove the seal plate from the rectifier end frame.

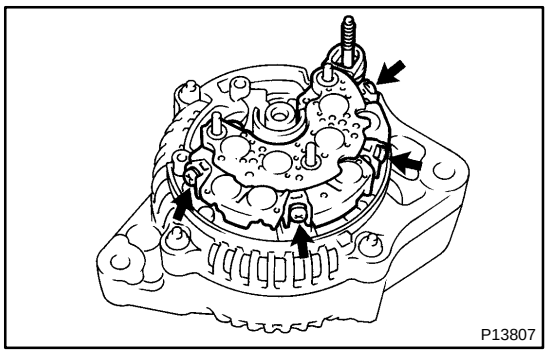

4. REMOVE RECTIFIER HOLDER

(a) Remove the 4 screws and rectifier holder.

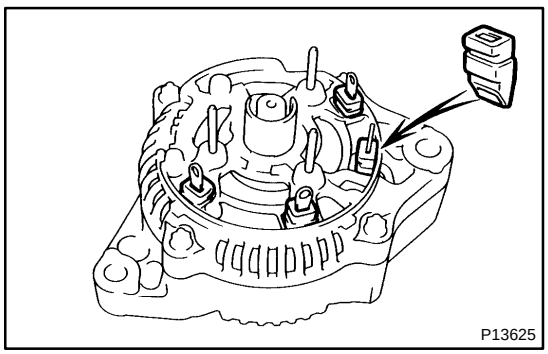

(b) Remove the 4 rubber insulators.

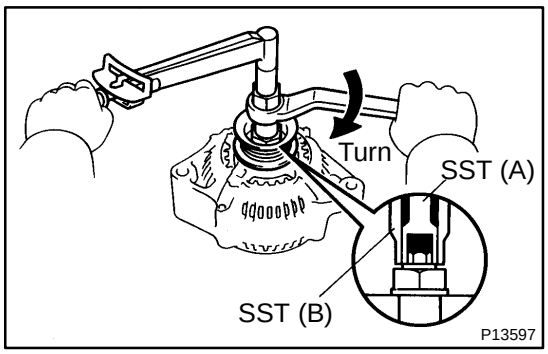

5. REMOVE PULLEY

(a) Hold SST (A) with a torque wrench, and tighten SST (B) clockwise to the specified torque.
SST 09820-63010
Torque: 39 N·m (400 kgf·cm, 29 ft·lbf)

(b) Check that SST (A) is secured to the rotor shaft.

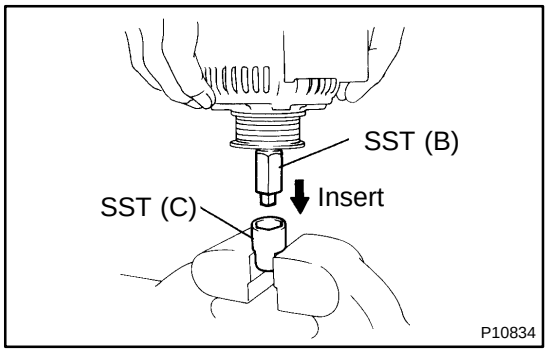

(c) Mount SST (C) in a vise.

(d) Insert SST (B) into SST (C), and attach the pulley nut to SST (C).

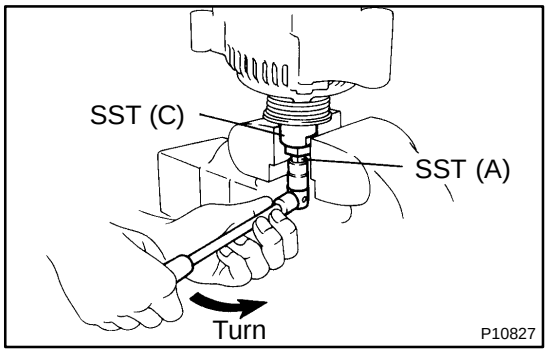

(e) To loosen the pulley nut, turn SST (A) in the direction shown in the illustration.

NOTICE:

To prevent damage to the rotor shaft, do not loosen the pulley nut more than one-half of a turn.

(f) Remove the generator from SST (C).

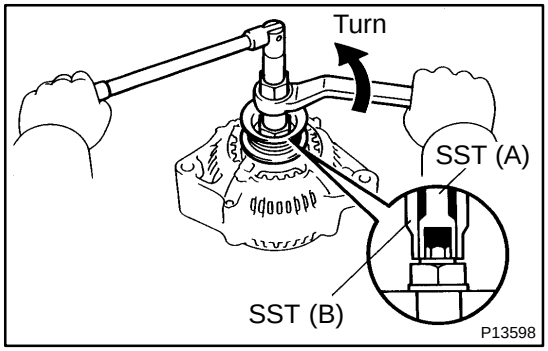

(g) Turn SST (B), and remove SST (A and B).

(h) Remove the pulley nut and pulley.

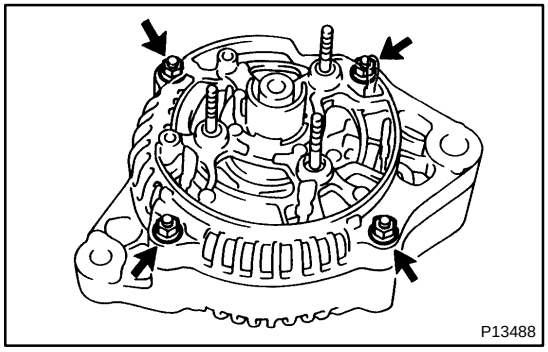

6. REMOVE RECTIFIER END FRAME

(a) Remove the 4 nuts.

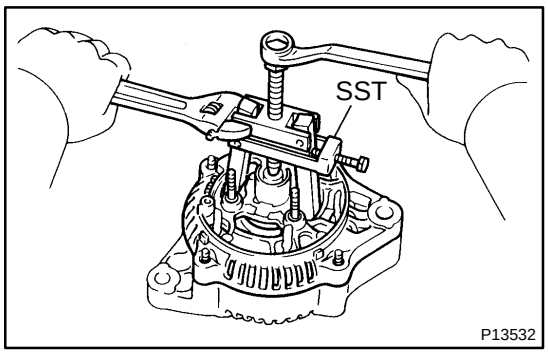

(b) Using SST, remove the rectifier end frame.
SST 09286-4601 1

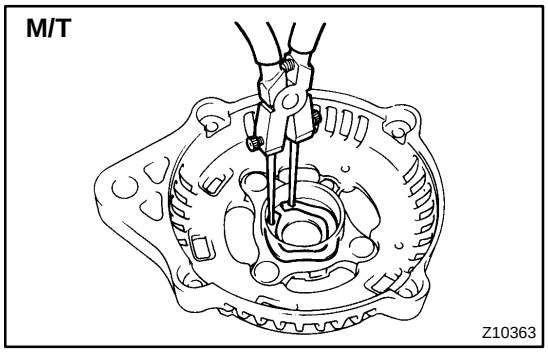

(c) M/T:
Using snap ring pliers, remove the generator washer from the rectifier end frame.

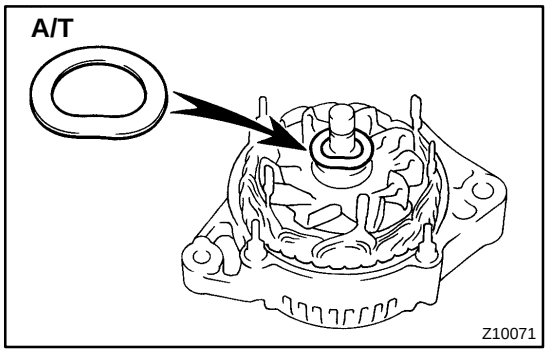

(d) A/T:
Remove the generator washer from the rotor.

7. REMOVE ROTOR FROM DRIVE END FRAME

CO0GL-03

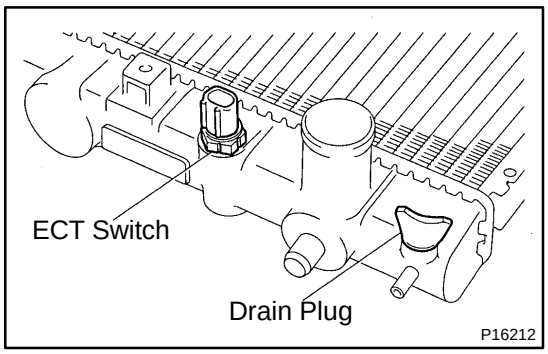

DISASSEMBLY

1. REMOVE ECT SWITCH

(a) Remove the ECT switch.

(b) Remove the O-ring.

2. REMOVE DRAIN PLUG

(a) Remove the drain plug.

(b) Remove the O-ring.

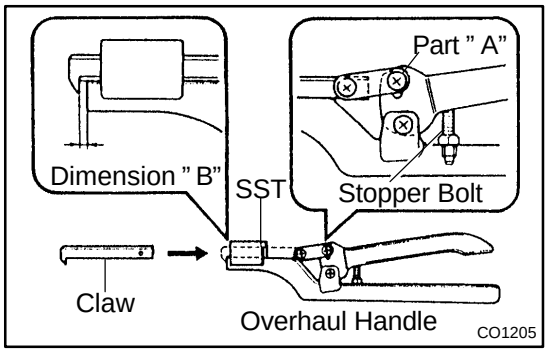

3. ASSEMBLE SST

SST 09230-01010

(a) Install the claw to the overhaul handle, inserting it in the hole in part "A" as shown in the diagram.

(b) While gripping the handle, adjust the stopper bolt so that dimension "B" shown in the diagram is 0.2 - 0.5 mm (0.008 - 0.020 in.).

NOTICE:

If this adjustment is not done the claw may be damaged.

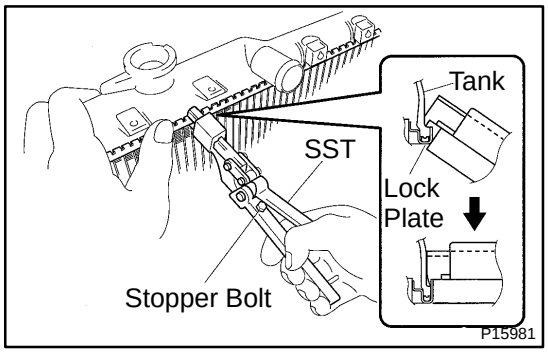

4. UNCAULK LOCK PLATES

Using SST to release the caulking, squeeze the handle until stopped by the stopper bolt.

SST 09230-01010

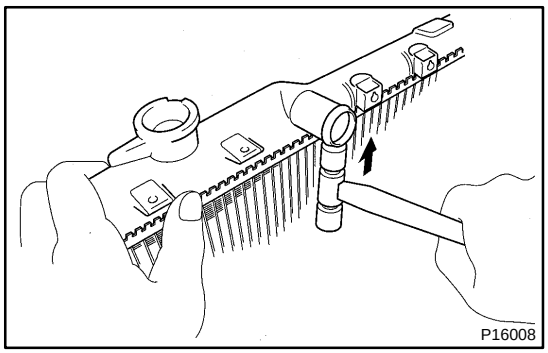

5. REMOVE TANKS AND O-RINGS

Lightly tap the bracket of the radiator (or radiator inlet or outlet) with a soft-faced hammer, and remove the tank and the O-ring.

6. A/T:

REMOVE OIL COOLER FROM LOWER TANK

(a) Loosen the nut, and remove the bolt and cooler pipe.

(b) Remove the 2 nuts and plate washers.

(c) Remove the oil cooler and 2 O-rings.

ST07R-03

DISASSEMBLY

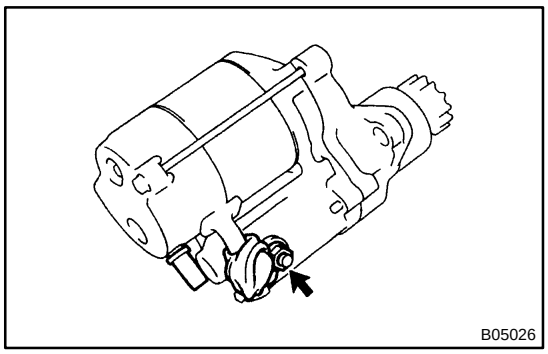
B05026

HINT:

Use high- temperature grease to lubricate the bearings, springs, steel ball, and gears when assembling the starter.

1. REMOVE DUST PROTECTOR

2. REMOVE FIELD FRAME AND ARMATURE

(a) Remove the nut, and disconnect the lead wire from the magnetic switch terminal.
Torque: 5.9 N·m (60 kgf·cm, 52 in.·lbf)

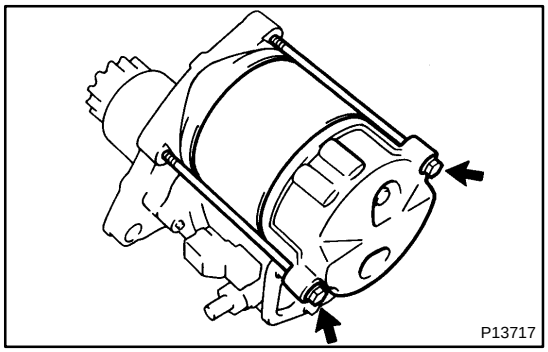
P13717

(b) Remove the 2 through bolts.
Torque: 5.9 N·m (60 kgf·cm, 52 in.·lbf)

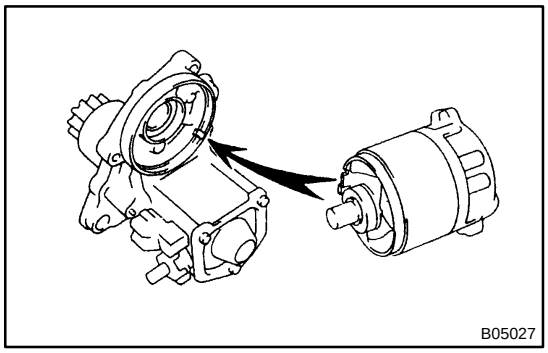
B05027

(c) Pull out the field frame together with the armature.

(d) Remove the O-ring from the field frame.

NOTICE:

Align the protrusion of the field frame with the groove of the magnetic switch.

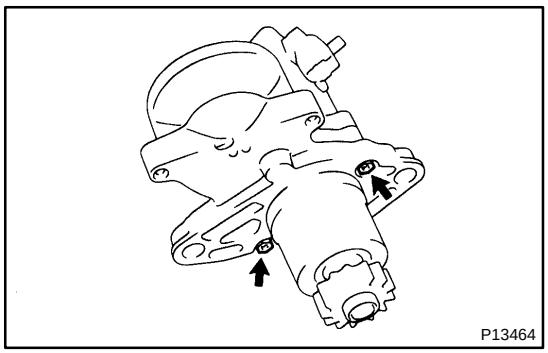
P13464

3. REMOVE STARTER HOUSING, CLUTCH ASSEMBLY AND GEAR

(a) Remove the 2 screws.
Torque: 5.9 N·m (60 kgf·cm, 52 in.·lbf)

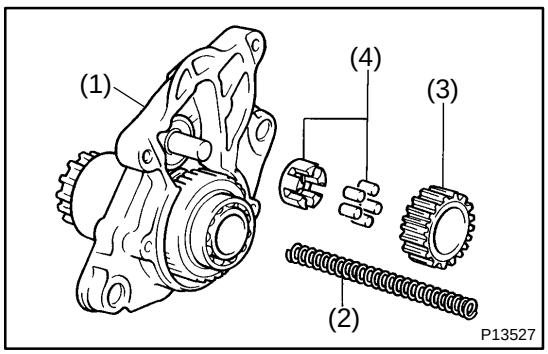

P13527

(b) Remove these parts from the magnetic switch:
(1) Starter housing and clutch assembly
(2) Return spring
(3) Idler gear
(4) Bearing

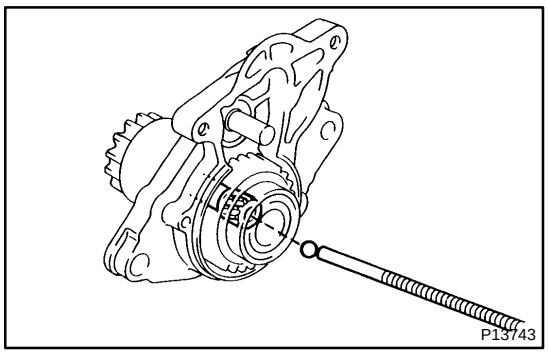

4. REMOVE STEEL BALL

Using a magnetic finger, remove the steel ball from the clutch shaft hole.

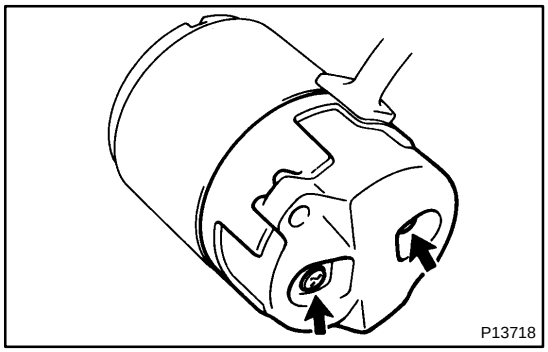

5. REMOVE BRUSH HOLDER

(a) Remove the 2 screws, 2 O-rings and end cover from the field frame.

Torque: 1.5 N·m (15 kgf·cm, 13 in.·lbf)

(b) Remove the O-ring from the field frame.

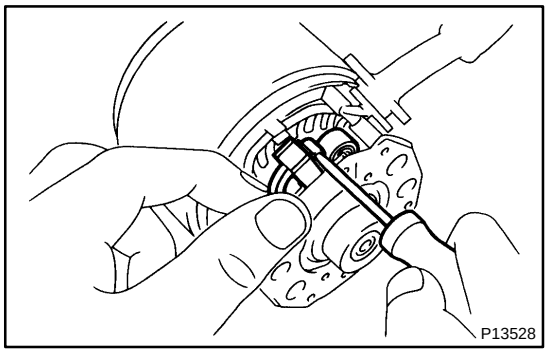

(c) Using a screwdriver, hold the spring back and disconnect the brush from the brush holder.

Disconnect the 4 brushes, and remove the brush holder.

NOTICE:

Check that the positive (+) lead wires are not grounded.

6. REMOVE ARMATURE FROM FIELD FRAME

EM1C3-01

DISASSEMBLY

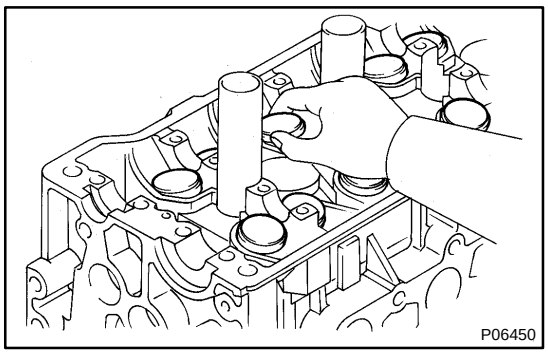

1. REMOVE VALVE LIFTERS AND SHIMS

HINT:

Arrange the valve lifters and shims in correct order.

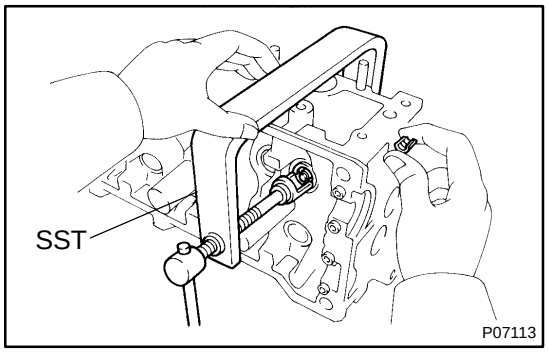

2. REMOVE VALVES

(a) Using SST, compress the valve spring and remove the 2 keepers.

SST 09202-70020

HINT:

Arrange the valves, valve springs, spring seats and spring retainers in correct order.

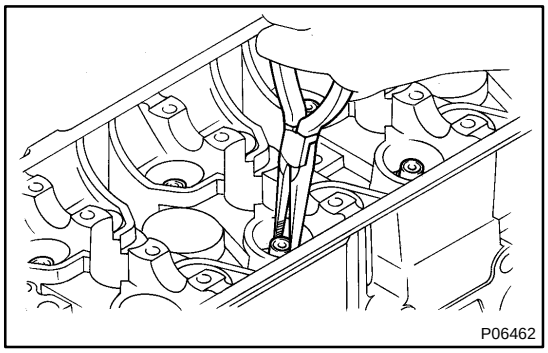

(b) Using needle-nose pliers, remove the oil seal.

IG0LI-01

DISASSEMBLY

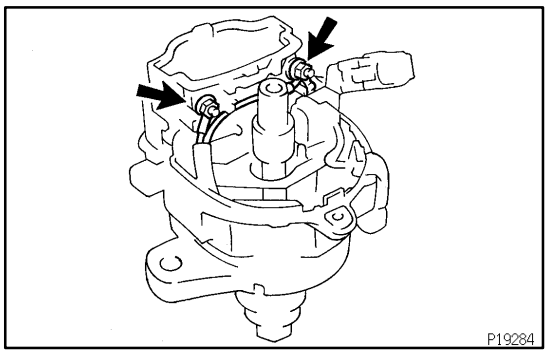

1. REMOVE DISTRIBUTOR CAP

Remove the 3 bolts and distributor cap.

2. REMOVE ROTOR

3. REMOVE IGNITION COIL DUST COVER

Remove the dust cover and gasket.

4. REMOVE IGNITION COIL

(a) Remove the 2 nuts, and disconnect the 3 wires from the ignition coil terminals.

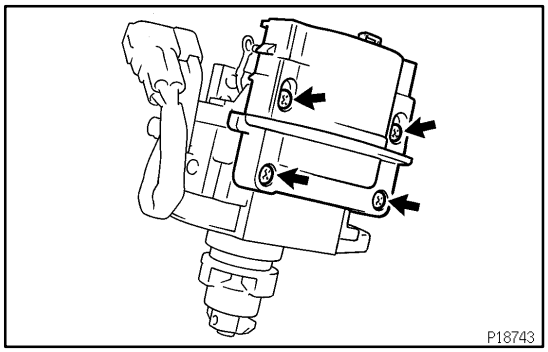

(b) Remove the 4 screws and ignition coil.

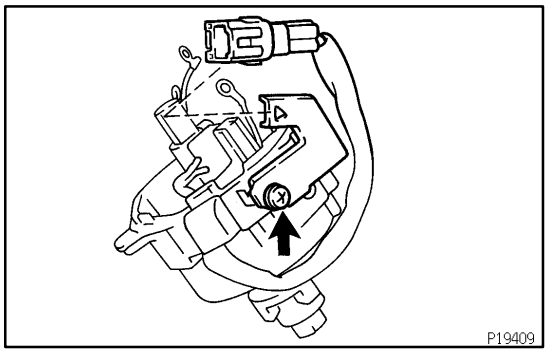

5. REMOVE CORD CLAMP

(a) Disconnect the connector from the cord clamp.

(b) Remove the screw and cord clamp.

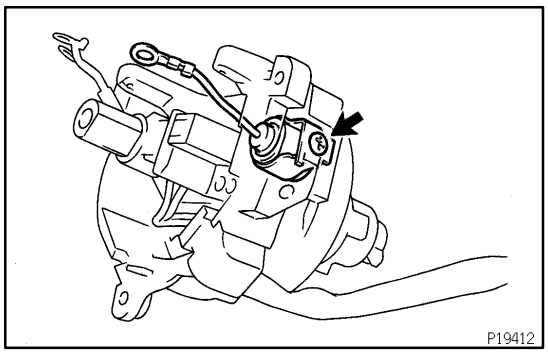

6. REMOVE CONDENSER

Remove the screw and condenser.

CO0ZR-01

DISASSEMBLY

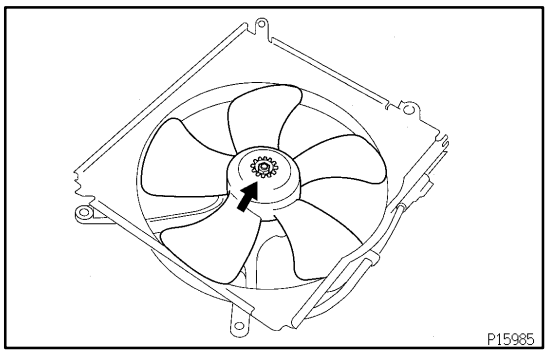

1. REMOVE NO.1 COOLING FAN

(a) Remove the fan.
Remove the nut and fan.

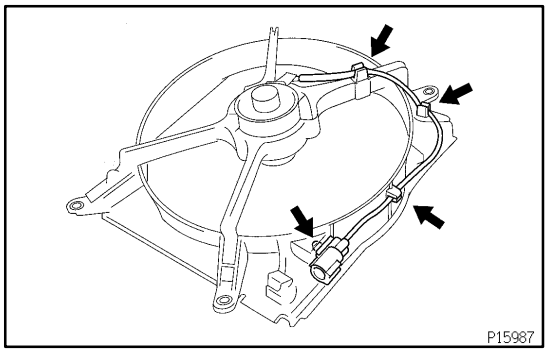

(b) Remove the fan motor.
(1) Disconnect the 4 wire clamps from the fan shroud.

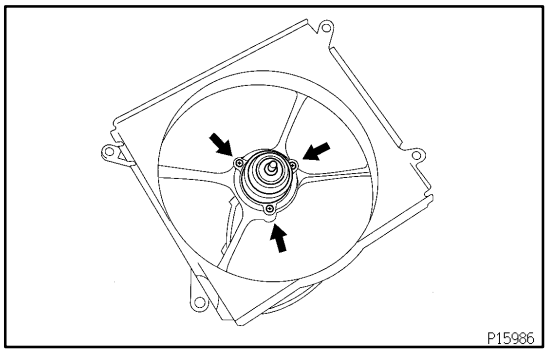

(2) Remove the 3 screws and fan motor.

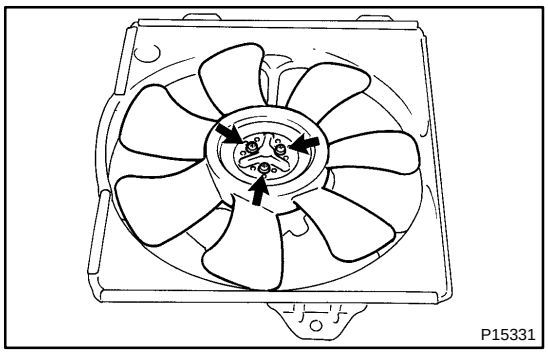

2. REMOVE NO.2 COOLING FAN

(a) Remove the fan.
Remove the 3 screws and fan.

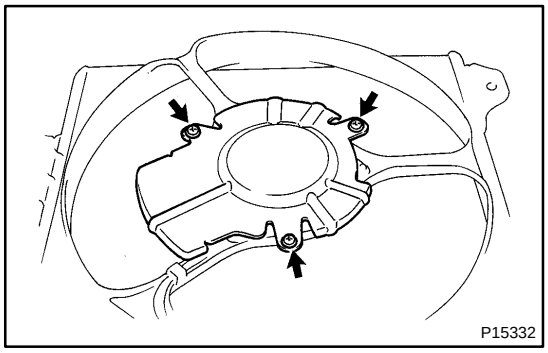

(b) Remove the fan motor cover.
Remove the 3 screws and motor cover.

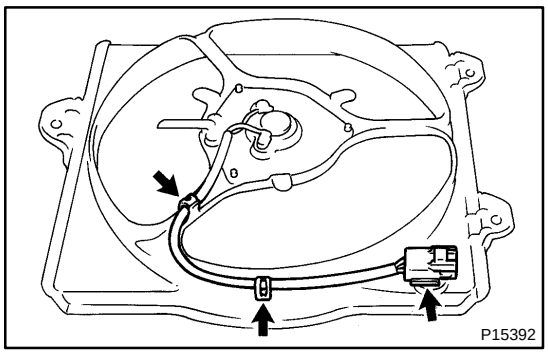

(c) Remove the fan motor.
(1) Disconnect the 3 wire clamps from the fan shroud.

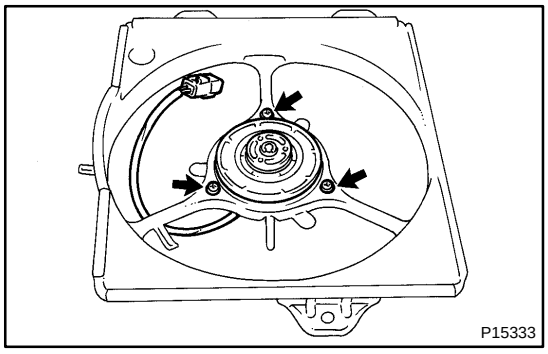

(2) Remove the 3 screws and fan motor.

SA24U-01

DISASSEMBLY

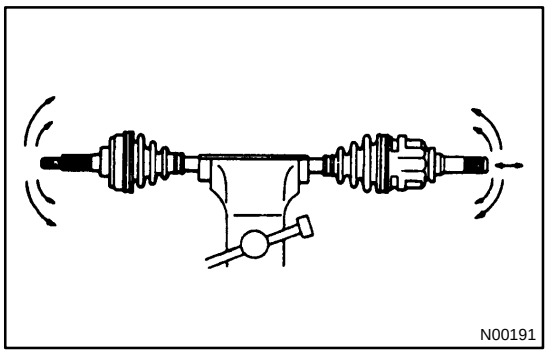
N00191

1. CHECK DRIVE SHAFT

(a) Check to see that there is no play in the outboard joint.

(b) Check to see that the inboard joint slides smoothly in the thrust direction.

(c) Check to see that there is no noticeable play in the radial direction of the inboard joint.

(d) Check for damage to the boots.

2. REMOVE INBOARD JOINT BOOT CLAMPS

(a) Using a screwdriver, remove the 2 boot clamps.

(b) Slide the inboard joint boot toward the outboard joint.

3. REMOVE INBOARD JOINT TULIP

(a) Place matchmarks on the inboard joint tulip, tripod and drive shaft.

NOTICE:

Do not punch the marks.

(b) Remove the inboard joint tulip from the drive shaft.

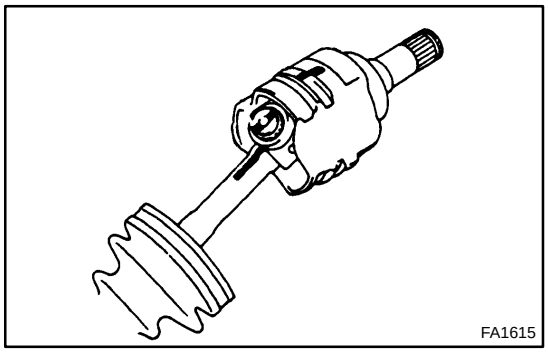
FA1615

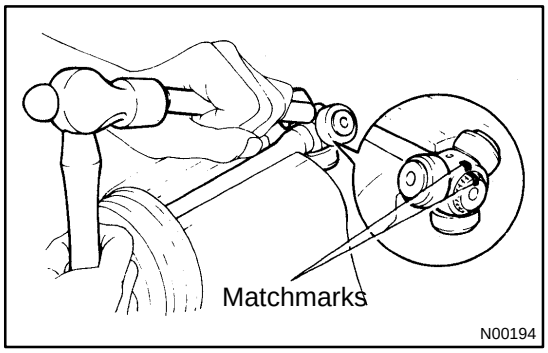

N00194

4. REMOVE TRIPOD

(a) Using a snap ring expander, remove the snap ring.

(b) Place matchmarks on the shaft and tripod.

NOTICE:

Do not punch the marks.

(c) Using a brass bar and hammer, remove the tripod from the drive shaft.

NOTICE:

Do not tap the roller.

5. REMOVE INBOARD JOINT BOOT

6. w/ DYNAMIC DAMPER (RH DRIVE SHAFT): REMOVE DYNAMIC DAMPER

(a) Using a screwdriver, remove the clamp of the dynamic damper.

(b) Remove the dynamic damper.

7. REMOVE OUTBOARD JOINT BOOT

(a) Using a screwdriver, remove the 2 boot clamps of the outboard joint boot.

(b) Remove the boot from the outboard joint.

NOTICE:

Do not disassemble the outboard joint.

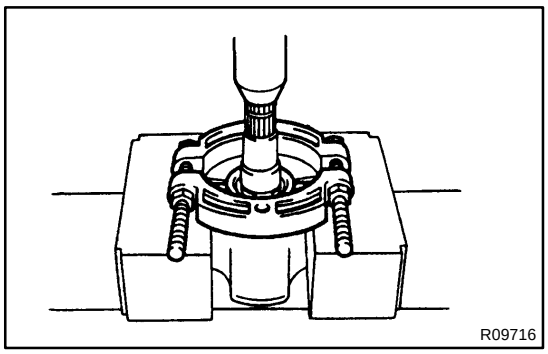

8. REMOVE DUST COVER

Using SST and a press, remove the dust cover from the inboard joint tulip.

SST 09950-00020

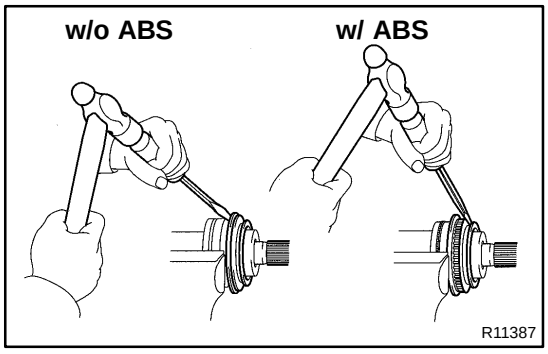

9. REMOVE NO.2 DUST DEFLECTOR

(a) Mount the outboard joint shaft in a soft jaw vise.

(b) Using a screwdriver and hammer, remove the No.2 dust deflector.

NOTICE:

Be careful not to damage the ABS speed sensor rotor (w/ ABS).

SF0W9-03

DISASSEMBLY

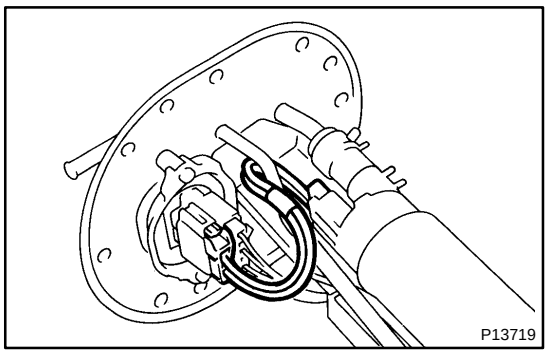

1. REMOVE FUEL PUMP FROM PUMP BRACKET

(a) Remove the lead wire.

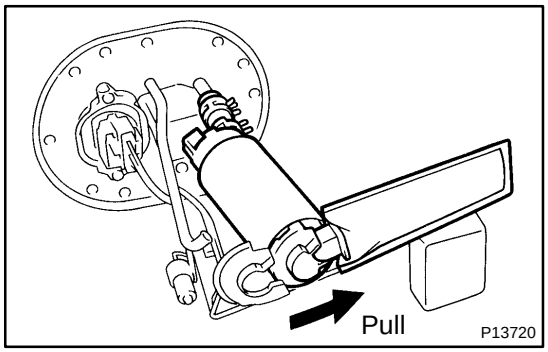

(b) Pull out the lower side of the fuel pump from the pump bracket.
(c) Remove the rubber cushion from the fuel pump.
(d) Disconnect the fuel hose from the fuel pump, and remove the fuel pump.

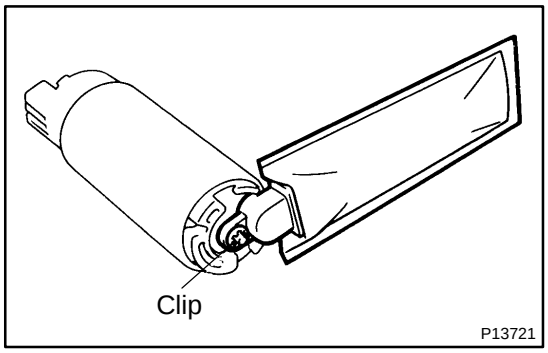

2. REMOVE FUEL PUMP FILTER FROM FUEL PUMP

(a) Remove the clip.
(b) Pull out the pump filter.

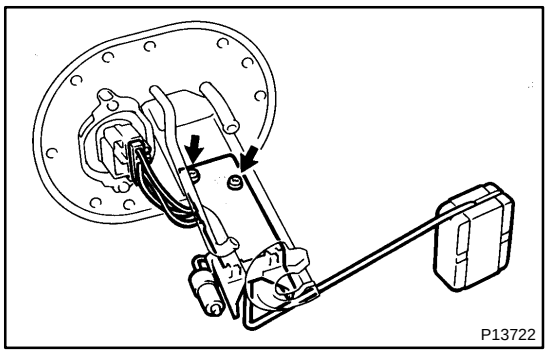

3. REMOVE FUEL SENDER GAUGE FROM FUEL PUMP BRACKET

(a) Disconnect the connector from the fuel pump bracket.
(b) Remove the 2 screws and sender gauge.

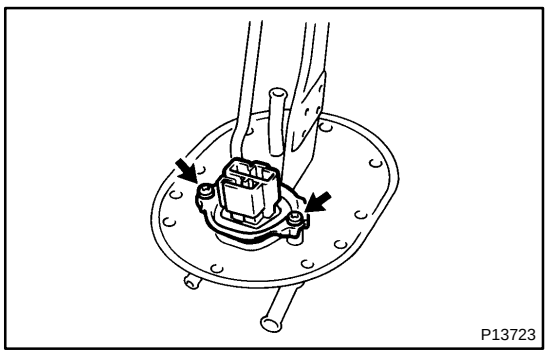

4. REMOVE CONNECTOR

Remove the 2 screws, connector support, connector and gasket.

LU0JO-01

DISASSEMBLY

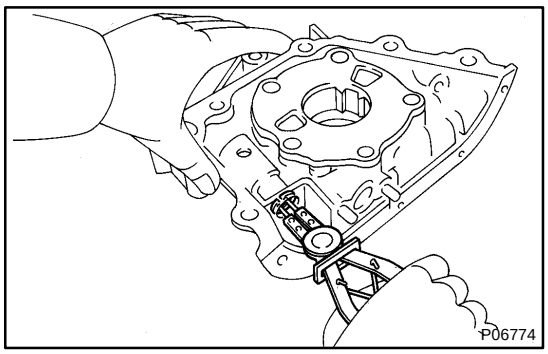

1. REMOVE RELIEF VALVE

(a) Using snap ring pliers, remove the snap ring.

(b) Remove the retainer, spring and relief valve.

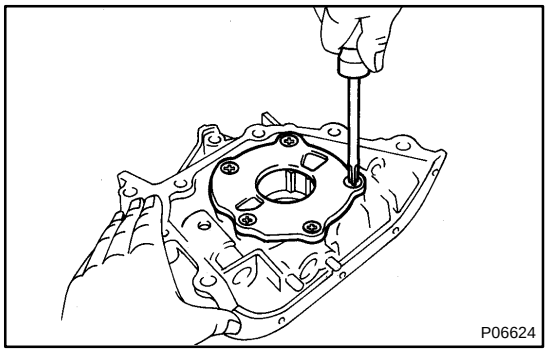

2. REMOVE DRIVE AND DRIVEN ROTORS

Remove the 5 screws, pump body cover, O-ring, the drive and driven rotors.

Torque: 10 N·m (105 kgf·cm, 8 ft·lbf)

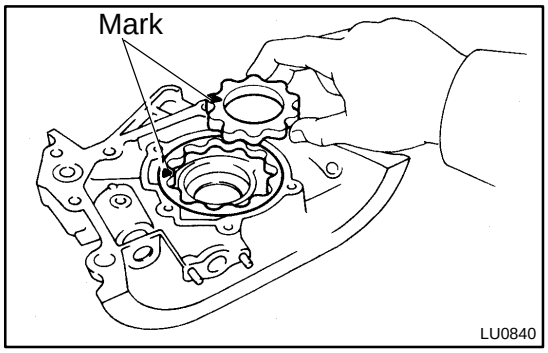

HINT:

Place the drive and driven rotors into pump body with the marks facing the pump body cover side.

CO0ZH-02

DISASSEMBLY

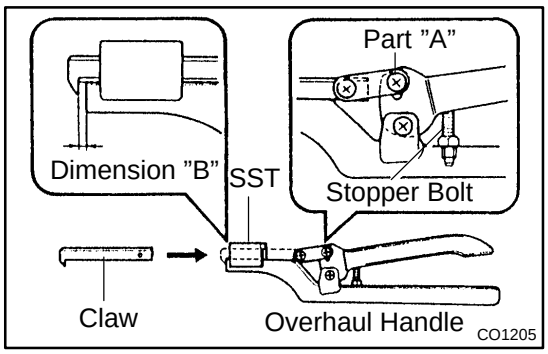

1. ASSEMBLY OF SST

SST 09230-01010

(a) Install the claw to the overhaul handle, inserting it in the hole in part "A" as shown in the diagram.

(b) While gripping the handle, adjust the stopper bolt so that dimension "B" shown in the illustration is 0.2 - 0.5 mm (0.008 - 0.020 in.).

NOTICE:

If this adjustment is not done, the claw may be damaged.

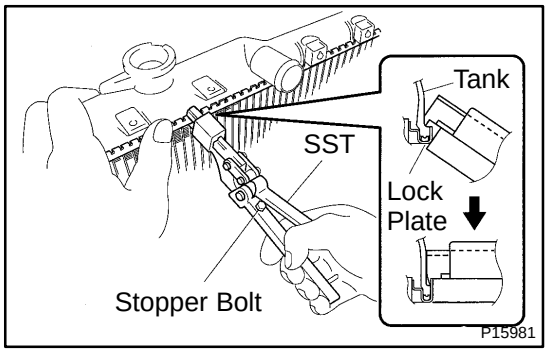

2. UNCAULK LOCK PLATES

Using SST to release the caulking, squeeze the handle until stopped by the stopper bolt.

SST 09230-01010

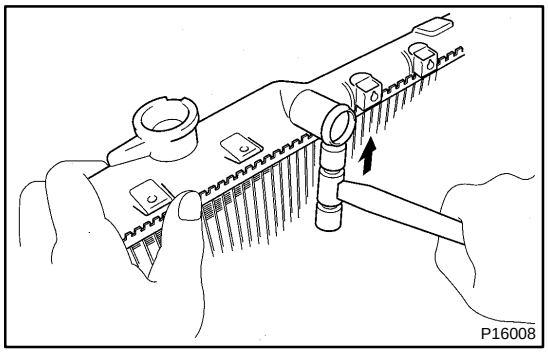

3. REMOVE TANKS AND O-RINGS

(a) Lightly tap the bracket of the radiator (or radiator hose inlet or outlet) with a soft-faced hammer and remove the tank.

(b) Remove the O-ring.

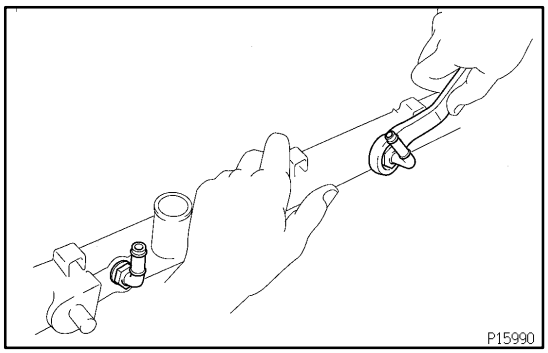

4. A/T:

REMOVE OIL COOLER FROM LOWER TANK

(a) Remove the pipe.

HINT:

Make a note of pipe's position before removal.

(b) Remove the nuts, and plate washers.

(c) Remove the oil cooler and O-rings.

ST0JX-02

DISASSEMBLY

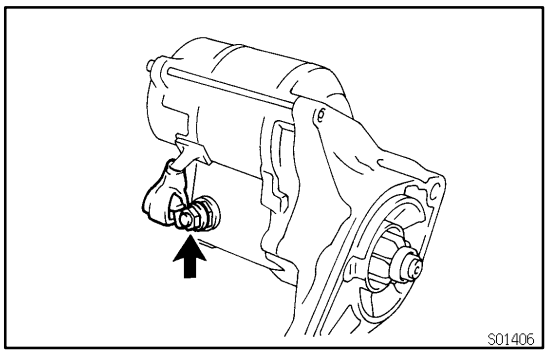

1. REMOVE DUST PROTECTOR(S)

2. REMOVE FIELD FRAME AND ARMATURE

(a) Remove the nut, and disconnect the lead wire from the magnetic switch terminal.
Torque: 7.9 N·m (80 kgf·cm, 70 in.·lbf)

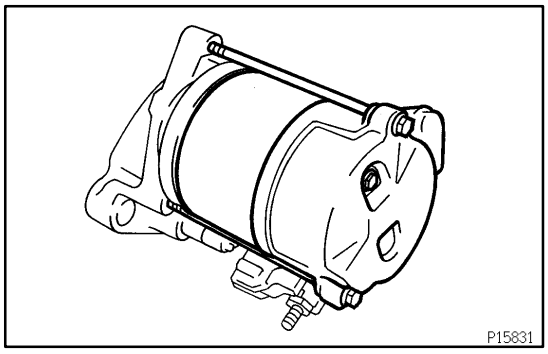

(b) Remove the 2 through bolts.
Torque: 5.9 N·m (60 kgf·cm, 52 in.·lbf)

(c) Pull out the field frame together with the armature from the magnetic switch

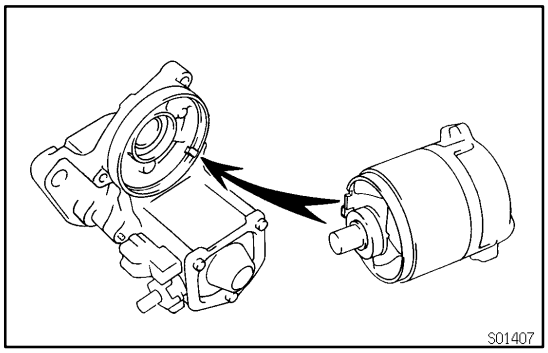

HINT:
Align the protrusion of the field frame with the cut out of the magnetic switch.

(d) Remove the O-ring from the field frame.

HINT:
Use a new O-ring.

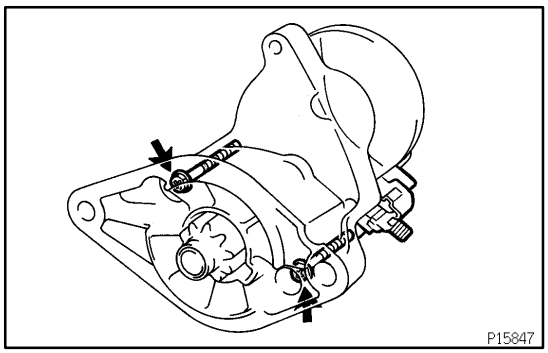

3. REMOVE STARTER HOUSING, CLUTCH ASSEMBLY AND GEAR

(a) Remove the 2 bolts.
Torque: 5.9 N·m (60 kgf·cm, 52 in.·lbf)

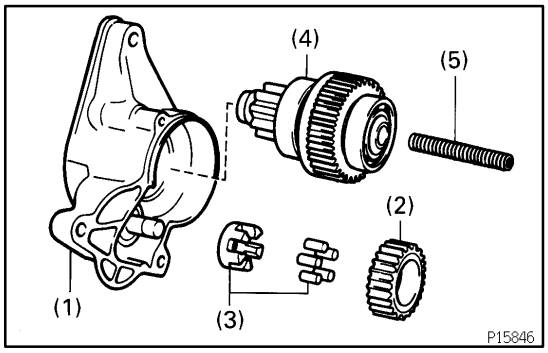

(b) Remove these parts from the magnetic switch assembly:
(1) Starter housing
(2) Idler gear
(3) Bearing
(4) Clutch assembly
(5) Return spring

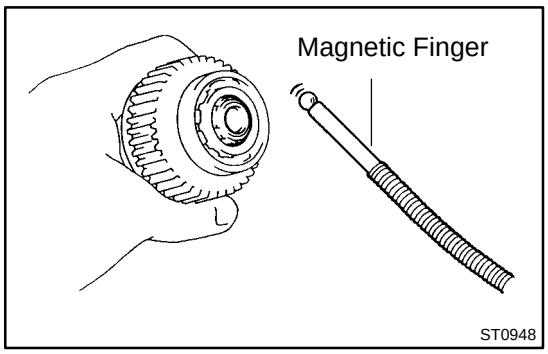

4. REMOVE STEEL BALL

Using a magnetic finger, remove the steel ball from the clutch shaft hole.

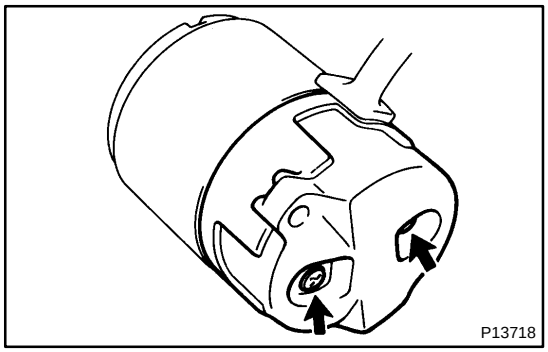

5. REMOVE BRUSH HOLDER

(a) Remove the 2 screws and end cover from the field frame.
Torque: 1.5 N·m (15 kgf·cm, 13 in.·lbf)

(b) Remove the O-ring from the field frame.

HINT:
Use a new O-ring.

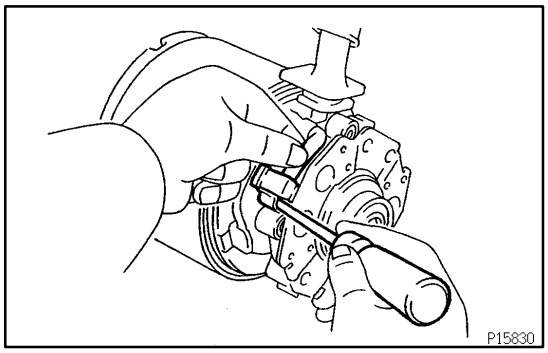

(c) Using a screwdriver, hold the spring back and disconnect the brush from the brush holder. Disconnect the 4 brushes, and remove the brush holder.

6. REMOVE ARMATURE FROM FIELD FRAME

BO1DP-03

DISASSEMBLY

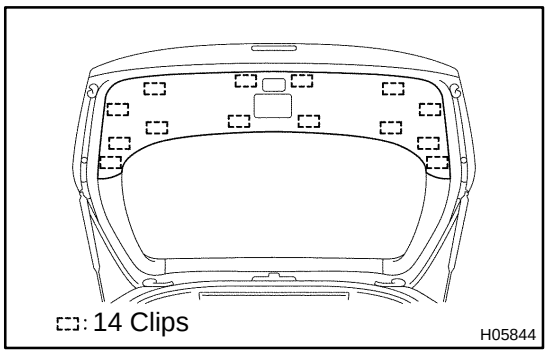

1. REMOVE BACK DOOR TRIM BOARD

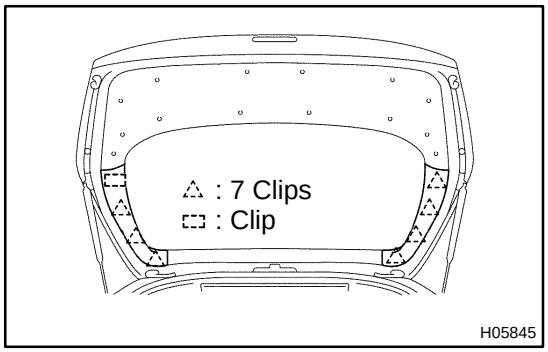

2. REMOVE BACK DOOR TRIM COVERS

3. REMOVE DECK TRIM REAR COVER

4. REMOVE WIPER ARM

5. REMOVE BACK DOOR REINFORCEMENT PLATE NO.2

Remove the 4 bolts and back door reinforcement plate No.2.

6. REMOVE HIGH-MOUNTED STOP LIGHT

(a) Disconnect the connector.

(b) Remove the 2 nuts and high-mounted stop light.

7. REMOVE WIPER MOTOR

(a) Disconnect the connector.

(b) Remove the 3 bolts and wiper motor.

8. REMOVE BACK DOOR LOCK

(a) Disconnect the link from the door lock cylinder.

(b) Disconnect the connector.

(c) Remove the 2 bolts and door lock.

9. REMOVE DOOR LOCK CYLINDER

Remove the 2 bolts and door lock cylinder.

MX0BW-01

DISASSEMBLY

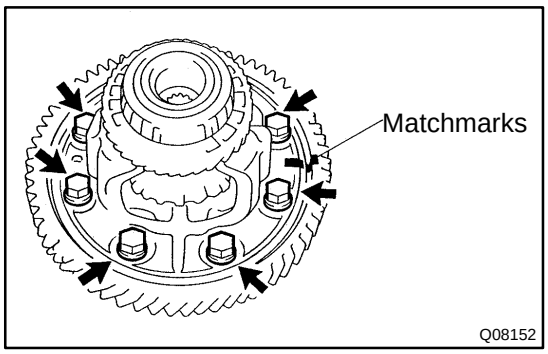

1. REMOVE RING GEAR

(a) Place matchmarks on the ring gear and case.
(b) Remove the 8 bolts.
(c) Using a copper hammer, tap on the ring gear to remove it from the case.

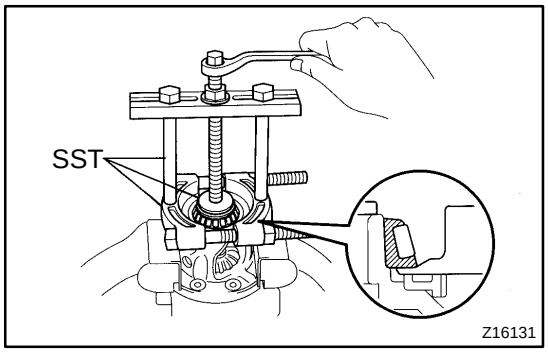

2. Vehicle Speed Sensor Drive Gear Side: REMOVE SIDE BEARING FROM DIFFERENTIAL CASE

(a) Using SST, remove the side bearing.
SST 09950-00020, 09950-00030, 09950-60010 (09951-00360)

HINT:
Apply the claw of SST to the bearing inner race at the position where the vehicle speed sensor drive gear is indented.

(b) Remove the vehicle speed sensor drive gear.

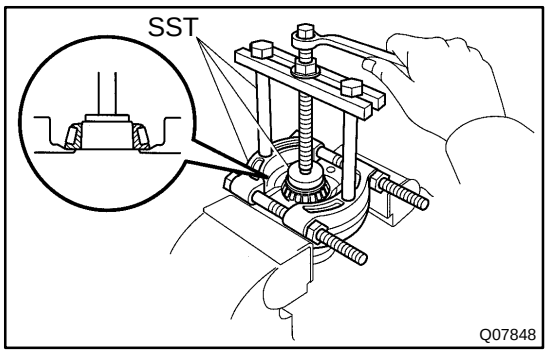

3. Ring Gear Side: REMOVE SIDE BEARING FROM DIFFERENTIAL CASE

Using SST, remove the side bearing.
SST 09950-00020, 09950-00030, 09950-60010 (09951-00360)

HINT:
Apply the claw of SST to the bearing inner race at the position where the differential case is indented.

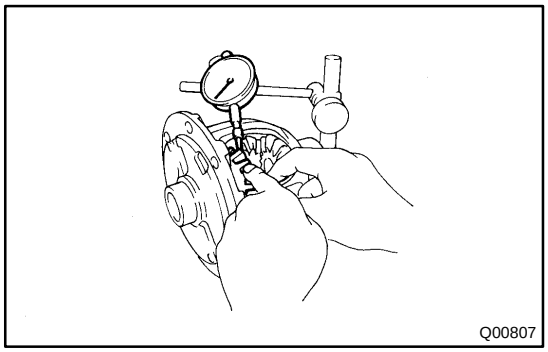

4. INSPECT SIDE GEAR BACKLASH

Using a dial indicator, measure the backlash of one side gear while holding one pinion toward the case.

Standard backlash: 0.05-0.20 mm (0.0020-0.0079 in.)

If the backlash is not within the specification, install the correct thrust washer to the side gears.

5. DISASSEMBLE DIFFERENTIAL CASE

(a) Using a pin punch and hammer, drive out the pinion shaft straight pin.

(b) Remove the pinion shaft from the case.

(c) Remove the 2 pinions and side gears with the 4 thrust washers from each gear.

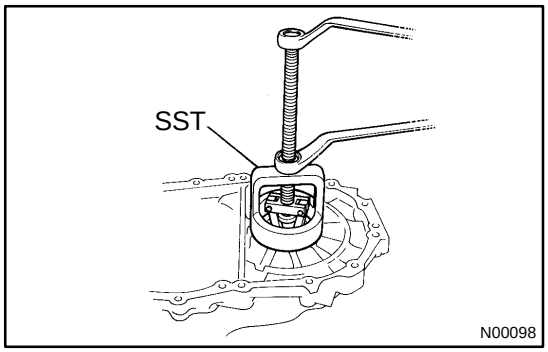

6. Transmission Case Side:
IF NECESSARY, REPLACE OIL SEAL AND SIDE BEARING OUTER RACE

(a) Using a screwdriver and hammer, drive out the oil seal.

(b) Using SST, pull out the outer race and shim.
SST 09612-65014

(c) Place the shim into the case.

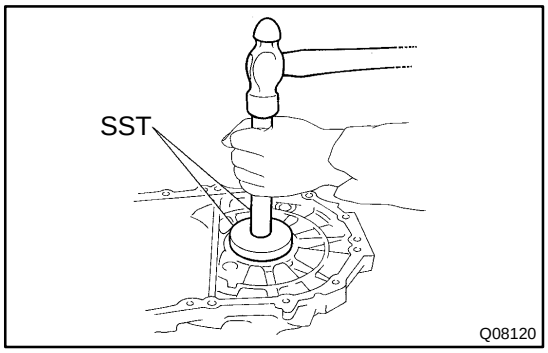

(d) Using SST and a hammer, drive in a new outer race.
SST 09950-60020 (09951-00710),
09950-70010 (09951-07150)

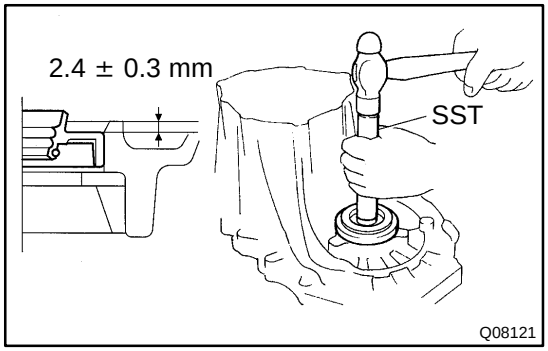

(e) Using SST and a hammer, drive in a new oil seal.
SST 09350-32014 (09351-32111, 09351-32130)
Drive in depth: 2.4 ± 0.3 mm (0.094 ± 0.012 in.)

(f) Coat the lip of the oil seal with MP grease.

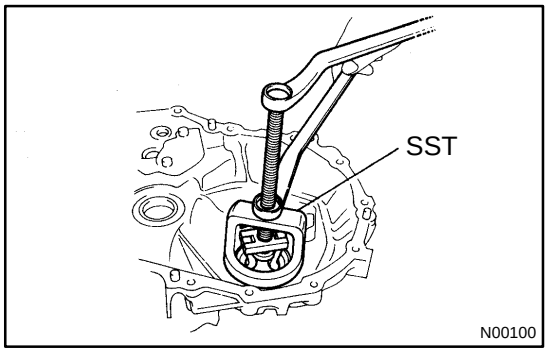

7. Transaxle Case Side:
IF NECESSARY, REPLACE OIL SEAL AND SIDE BEARING OUTER RACE

(a) Using a screwdriver and hammer, drive out the oil seal.

(b) Using SST, pull out the outer race and shim.
SST 09612-65014

(c) Place the shim into the case.

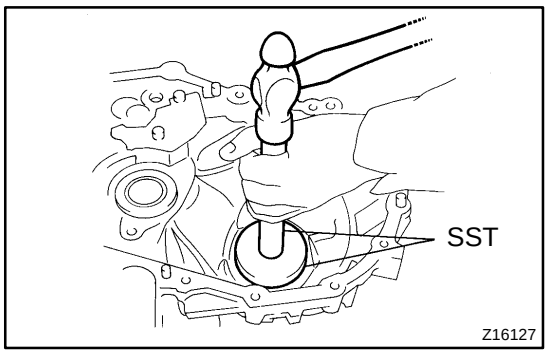

(d) Using SST and a hammer, drive in a new outer race.
SST 09950-60020 (09951-00680),
09950-70010 (09951-07150)

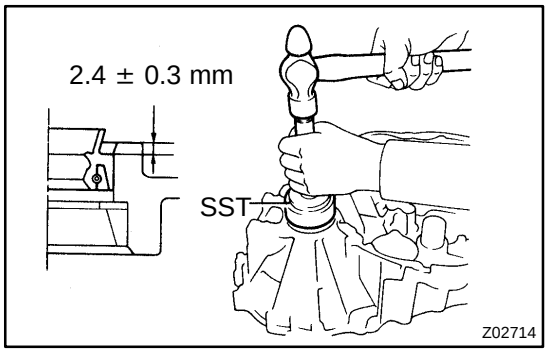

(e) Using SST and a hammer, drive in a new oil seal.
SST 09350-32014 (09351-32130, 09351-32150)
Drive in depth: 2.4 ± 0.3 mm (0.094 ± 0.012 in.)

(f) Coat the lip of the oil seal with MP grease.

MX0BN-01

DISASSEMBLY

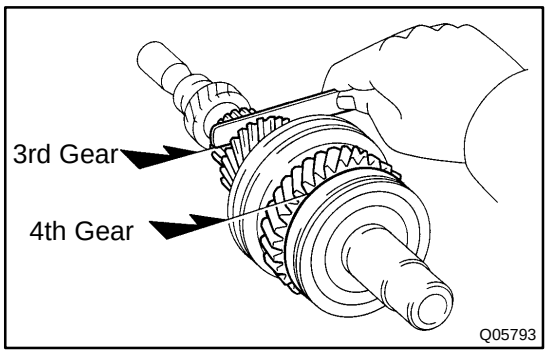

1. INSPECT 3RD AND 4TH GEARS THRUST CLEARANCE

Using a feeler gauge, measure the thrust clearance.

Standard clearance:
3rd gear: 0.10-0.35 mm (0.0039-0.0138 in.)
4th gear: 0.10-0.55 mm (0.0039-0.0217 in.)
Maximum clearance:
3rd gear: 0.40 mm (0.0157 in.)
4th gear: 0.60 mm (0.0236 in.)

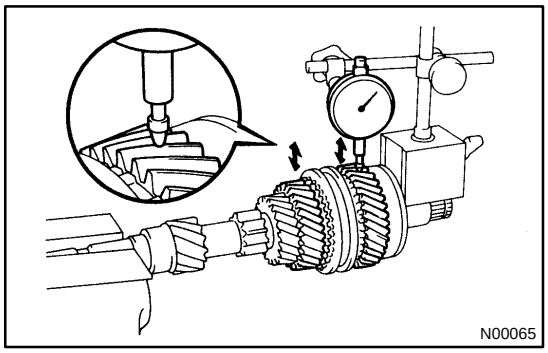

2. INSPECT 3RD AND 4TH GEARS RADIAL CLEARANCE

Using a dial indicator, measure the radial clearance between the gear and shaft.

Standard clearance: 0.015-0.058 mm (0.0006-0.0023 in.)
Maximum clearance: 0.070 mm (0.0028 in.)

If the clearance exceeds the maximum, replace the gear, needle roller bearing and shaft.

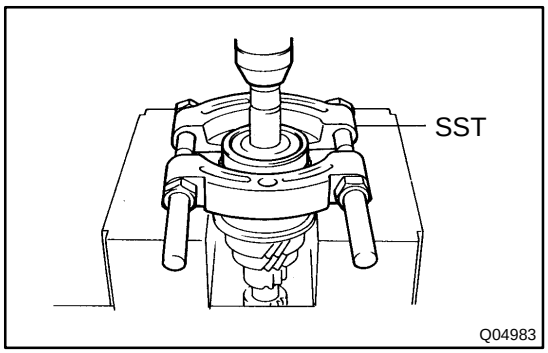

3. REMOVE SNAP RING

Using 2 screwdrivers and a hammer, tap out the snap ring.

4. REMOVE REAR BALL BEARING, 4TH GEAR, NEEDLE ROLLER BEARING, SPACER AND SYNCHRONIZER RING FROM INPUT SHAFT

(a) Using SST and a press, remove the rear ball bearing.
SST 09950-00020

(b) Remove the 4th gear, needle roller bearings, spacer and synchronizer ring.

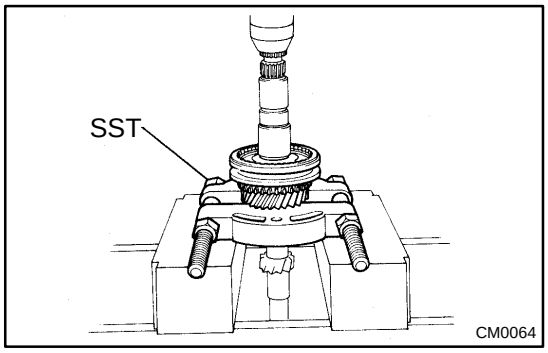

5. REMOVE SNAP RING

Using 2 screwdrivers and a hammer, tap out the snap ring.

6. REMOVE NO.2 HUB SLEEVE ASSEMBLY, 3RD GEAR, SYNCHRONIZER RING AND NEEDLE ROLLER BEARING

Using SST and a press, remove the No.2 hub sleeve assembly, 3rd gear, synchronizer ring and needle roller bearings.

SST 09950-00020

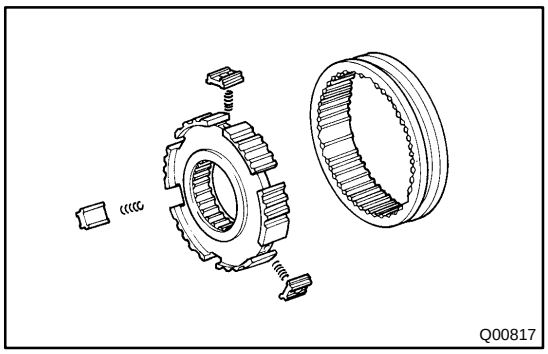

7. REMOVE NO.2 HUB SLEEVE, SHIFTING KEY AND SPRING FROM NO.2 CLUTCH HUB

Remove the 3 shifting keys and springs from the No.2 clutch hub.

MX0BJ-01

DISASSEMBLY

1. REMOVE RELEASE FORK AND BEARING

HINT:

Apply molybdenum disulphide lithium base grease. (See page CL-17)

2. REMOVE BOLT AND VEHICLE SPEED SENSOR DRIVEN GEAR

Torque: 11 N·m (115 kgf·cm, 8 ft·lbf)

3. REMOVE BACK-UP LIGHT SWITCH

Torque: 40 N·m (410 kgf·cm, 30 ft·lbf)

4. REMOVE SELECTING BELLCRANK ASSEMBLY

(a) Remove the 2 bolts and selecting bellcrank assembly.

Torque: 25 N·m (250 kgf·cm, 18 ft·lbf)

(b) Remove the control bellcrank dust cover from the selecting bellcrank assembly.

5. REMOVE CONTROL LEVER HOUSING SUPPORT BRACKET

Remove the 3 bolts and bracket.

Torque: 11 N·m (115 kgf·cm, 8 ft·lbf)

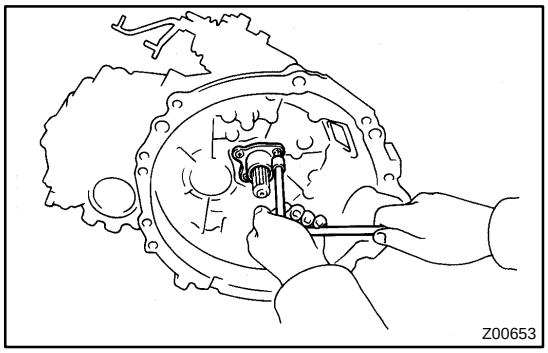

6. REMOVE CLUTCH RELEASE BEARING RETAINER

Using a torx wrench (T30), remove the 3 torx screws and retainer.

Torque: 11 N·m (110 kgf·cm, 8 ft·lbf)

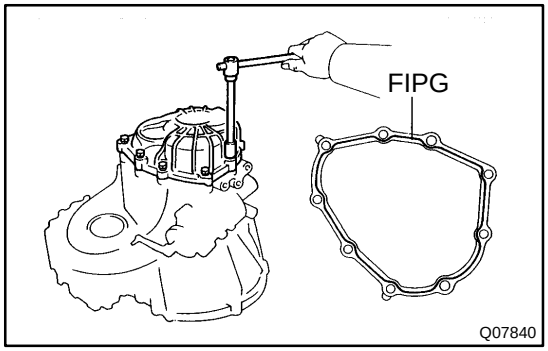

7. REMOVE TRANSMISSION CASE COVER

(a) Remove the 9 bolts.

Torque: 18 N·m (185 kgf·cm, 13 ft·lbf)

(b) Using a brass bar and hammer, carefully tap the projection of the transmission case cover to remove the transmission case cover from the transmission case, and remove the transmission case cover.

FIPG: Part No. 08826-00090, THREE BOND 1281 or equivalent

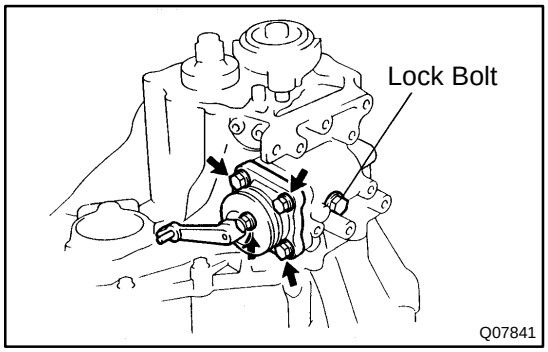

8. REMOVE SHIFT AND SELECT LEVER SHAFT ASSEMBLY

(a) Remove the lock bolt.

Torque: 29 N·m (300 kgf·cm, 22 ft·lbf)

(b) Remove the 4 bolts and pull out the shift and select lever shaft assembly with the gasket.

Sealant: Part No.08833-00080, THREE BOND 1344, LOCTITE 242 or equivalent

Torque: 20 N·m (200 kgf·cm, 14 ft·lbf)

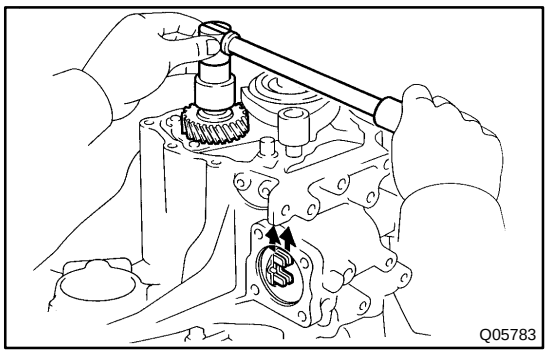

9. REMOVE LOCK NUT

(a) Engage the gear double meshing.

(b) Using a chisel and hammer, loosen the staked part of the nut.

(c) Remove the lock nut.

Torque: 118 N·m (1,200 kgf·cm, 87 ft·lbf)

(d) Disengage the gear double meshing.

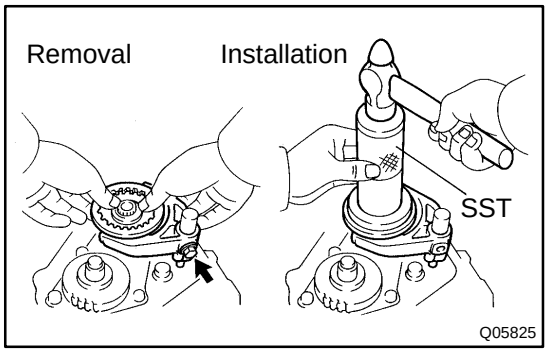

10. REMOVE NO.3 HUB SLEEVE AND NO.3 SHIFT FORK

(a) Remove the bolt from the No.3 shift fork.

Torque: 16 N·m (160 kgf·cm, 12 ft·lbf)

(b) Remove the No.3 hub sleeve and shift fork.

HINT:

Using SST and a hammer, drive in the No.3 hub sleeve with the shift fork.

SST 09636-20010

NOTICE:

Align the synchronizer ring slots with the shifting keys.

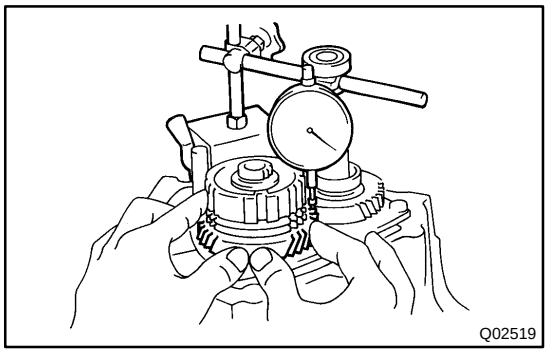

11. INSPECT 5TH GEAR THRUST CLEARANCE

Using a dial indicator, measure the thrust clearance.

Standard clearance: 0.10-0.57 mm (0.0039-0.0224 in.)

Maximum clearance: 0.65 mm (0.0256 in.)

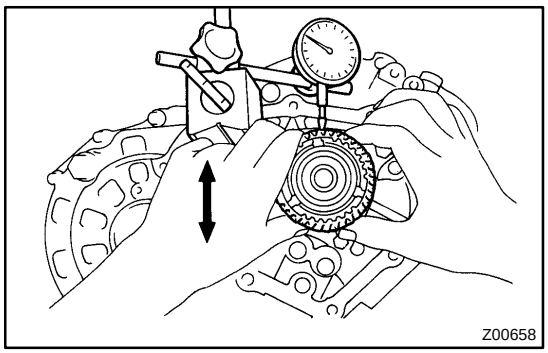

12. INSPECT 5TH GEAR RADIAL CLEARANCE

Using a dial indicator, measure the radial clearance.

Standard clearance: 0.015-0.058 mm (0.0006-0.0023 in.)

Maximum clearance: 0.070 mm (0.0028 in.)

If the clearance exceeds the maximum, replace the gear, needle roller bearing or shaft.

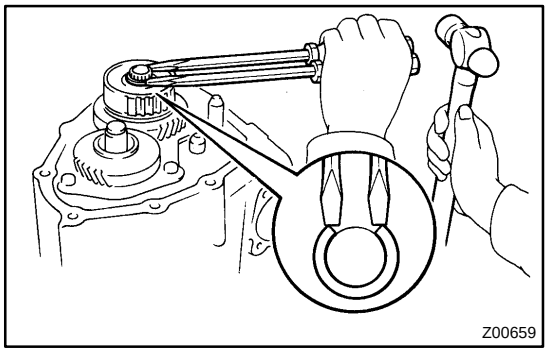

13. REMOVE NO.3 CLUTCH HUB AND 5TH GEAR

(a) Using 2 screwdrivers and a hammer, tap out the snap ring.

HINT:
Select a snap ring that will allow minimum axial play.

Mark	Thickness mm (in.)	Mark	Thickness mm (in.)
A	2.25 (0.0886)	E	2.49 (0.0980)
B	2.31 (0.0909)	F	2.55 (0.1004)
C	2.37 (0.0933)	G	2.61 (0.1028)
D	2.43 (0.0957)	-	-

(b) Using a screwdriver, remove the key spring.

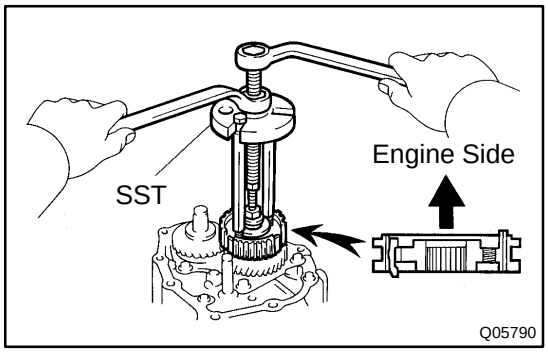

(c) Install a bolt and washer to the tip of the input shaft and using SST, remove the No.3 clutch hub.
SST 09950-30010

NOTICE:
Select a bolt whose outer diameter is smaller than the screw hole of the input shaft so that it can be turned easily.

(d) Remove the synchronizer ring, 5th gear and needle roller bearing.

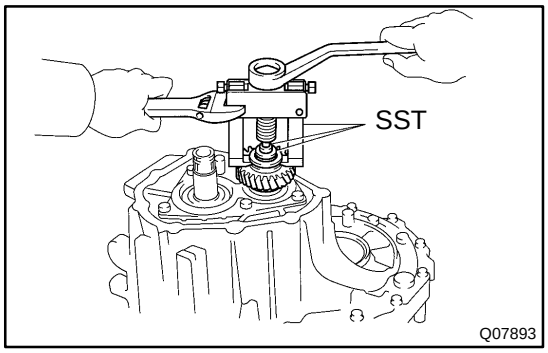

14. REMOVE 5TH DRIVEN GEAR

Using SST, remove the 5th driven gear.
SST 09628-62011, 09950-40010 (09957-04010), 09950-60010 (09951-00230)

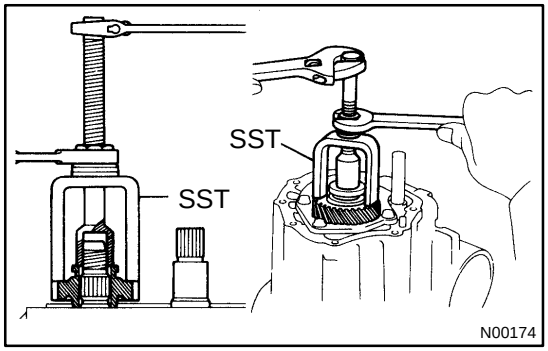

HINT:
Using SST, install the 5th driven gear.
SST 09309-12020

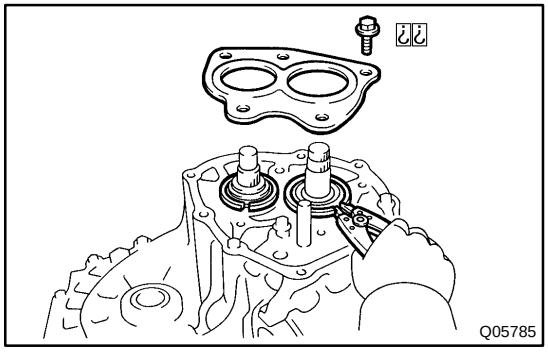

15. REMOVE REAR BEARING RETAINER

Remove the 5 bolts and retainer.
Torque: 27 N·m (280 kgf·cm, 20 ft·lbf)

16. REMOVE BEARING SNAP RING

Using a snap ring expander, remove the 2 snap rings.
HINT:
If it is difficult to remove and install the snap rings, pull up the shafts.

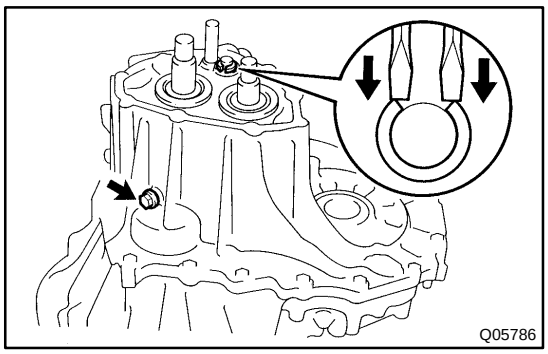

17. REMOVE REVERSE IDLER GEAR SHAFT LOCK BOLT
Torque: 29 N·m (300 kgf·cm, 22 ft·lbf)

18. REMOVE SNAP RING FROM NO.2 SHIFT FORK SHAFT

Using 2 screwdrivers and a hammer, tap out the snap ring.

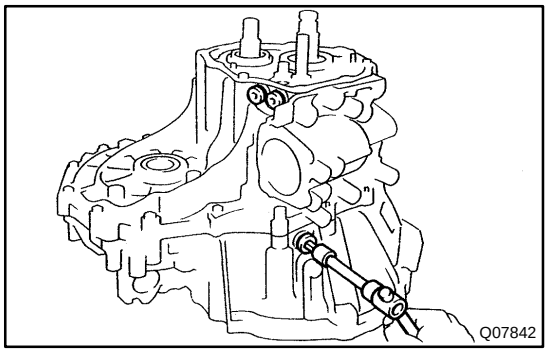

19. REMOVE PLUG, SEAT, SPRING AND BALL

(a) Using a hexagon wrench, remove the 3 plugs.
Sealant: Part No. 08833-00080, THREE BOND 1344, LOCTITE 242 or equivalent
Torque: 25 N·m (250 kgf·cm, 18 ft·lbf)

(b) Using a magnetic finger, remove the 3 seats, springs and balls.

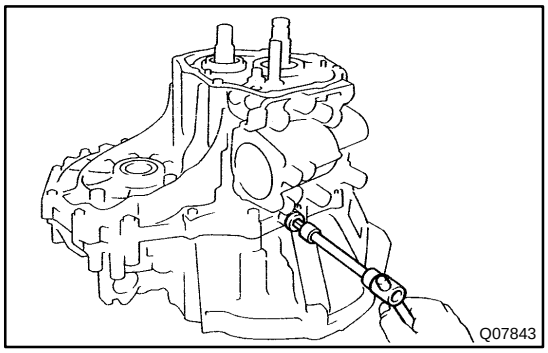

20. REMOVE LOCK BALL ASSEMBLY

Using a hexagon wrench, remove the lock ball assembly.
Sealant: Part No. 08833-00080, THREE BOND 1344, LOCTITE 242 or equivalent
Torque: 39 N·m (400 kgf·cm, 29 ft·lbf)

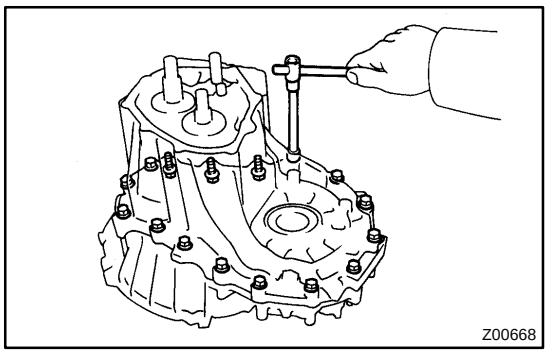

21. REMOVE TRANSMISSION CASE

(a) Remove the 16 bolts.
Torque: 29 N·m (300 kgf·cm, 22 ft·lbf)

(b) Using a plastic hammer, carefully tap the projection of the transmission case to remove the transmission case from the transaxle case, and remove the transmission case.

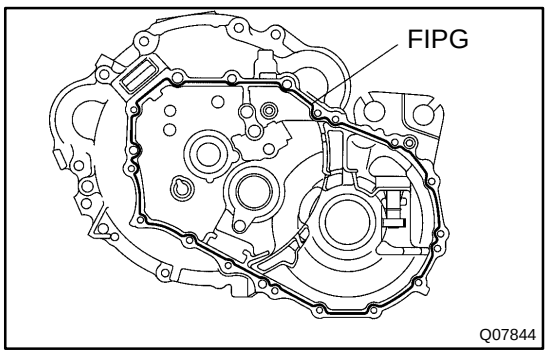

FIPG: Part No. 08826-00090, THREE BOND 1281 or equivalent

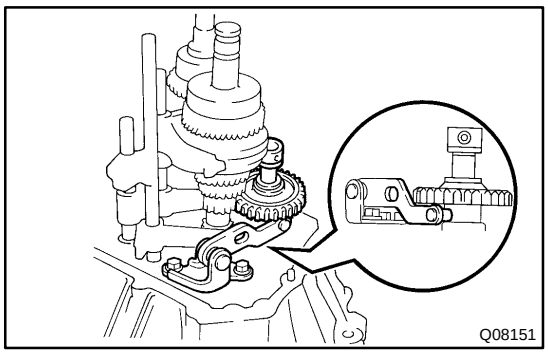

22. REMOVE REVERSE IDLER GEAR, THRUST WASHER AND SHAFT

23. REMOVE REVERSE SHIFT ARM BRACKET

Remove the 2 bolts and bracket.

Torque: 17 N·m (175 kgf·cm, 13 ft·lbf)

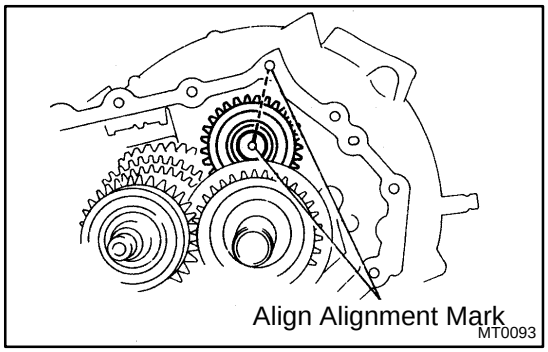

HINT:

Install the reverse idler gear, thrust washer and shaft, as shown.

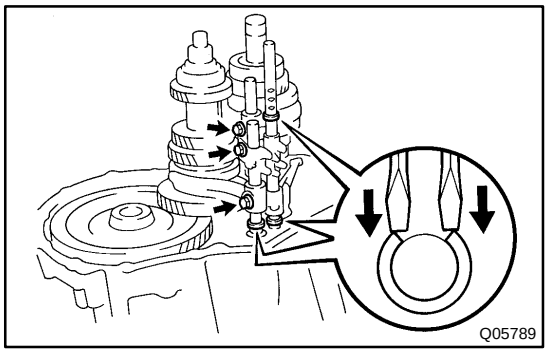

24. REMOVE SHIFT FORK AND SHIFT FORK SHAFT

(a) Using 2 screwdrivers and a hammer, tap out the 3 snap rings.

(b) Remove the 3 set bolts.

Torque: 16 N·m (160 kgf·cm, 12 ft·lbf)

(c) Pull up the No.3 shift fork shaft, remove the No.2 shift fork shaft and shift head.

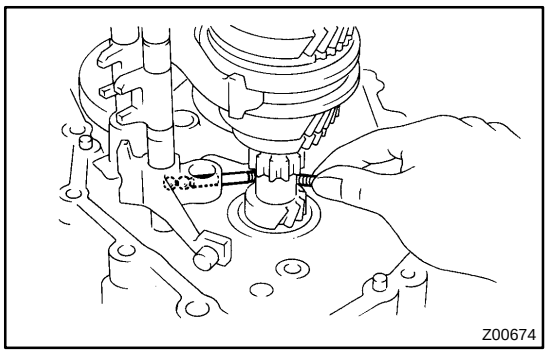

(d) Using a magnetic finger, remove the 2 balls from the reverse shift fork.

(e) Remove the No.3 shift fork shaft and reverse shift fork.

(f) Pull out the No.1 shift fork shaft.

(g) Remove the No.1 and No.2 shift forks.

25. REMOVE INPUT AND OUTPUT SHAFTS TOGETHER FROM TRANSAXLE CASE

26. REMOVE DIFFERENTIAL CASE ASSEMBLY

HINT:

Before assembly, inspect the differential side bearing preload.

27. REMOVE MAGNET FROM TRANSAXLE CASE

28. REMOVE NO.3 HUB SLEEVE, SHIFTING KEY AND SPRING FROM NO.3 CLUTCH HUB

Using a screwdriver, remove the 3 shifting keys and 2 springs from the No.3 clutch hub.

MX0BR-01

DISASSEMBLY

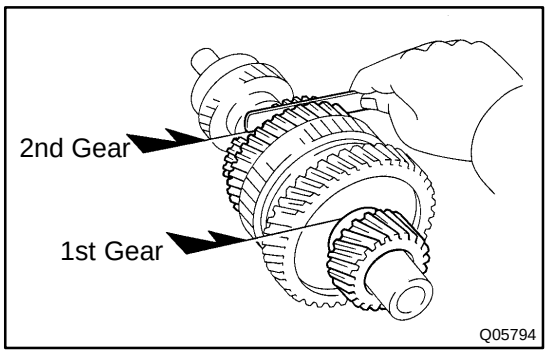

1. INSPECT 1ST AND 2ND GEARS THRUST CLEARANCE

Using a feeler gauge, measure the thrust clearance.

Standard clearance:
1st gear: 0.10-0.40 mm (0.0039-0.0157 in.)
2nd gear: 0.10-0.45 mm (0.0039-0.0177 in.)
Maximum clearance:
1st gear: 0.45 mm (0.0177 in.)
2nd gear: 0.50 mm (0.0197 in.)

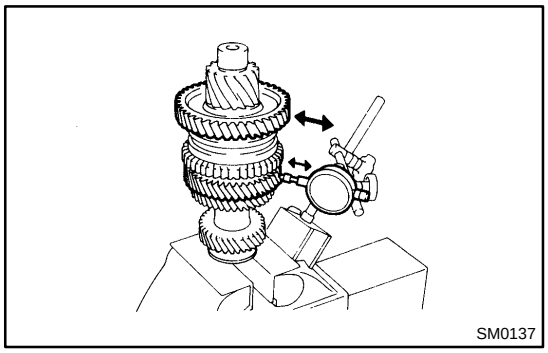

2. INSPECT 1ST AND 2ND GEARS RADIAL CLEARANCE

Using a dial indicator, measure the radial clearance between the gear and shaft.

Standard clearance:
0.015-0.058 mm (0.0006-0.0023 in.)
Maximum clearance: 0.070 mm (0.0028 in.)

If the clearance exceeds the maximum, replace the gear, needle roller bearing and shaft.

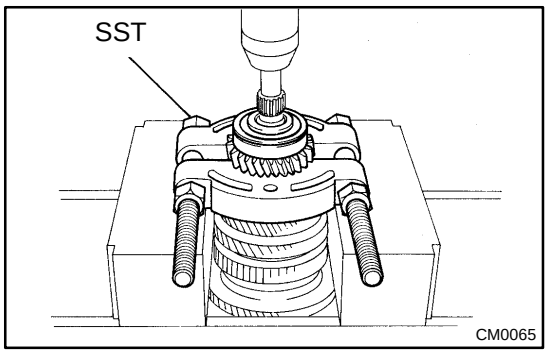

3. REMOVE REAR BALL BEARING, 4TH DRIVEN GEAR AND OUTPUT GEAR SPACER FROM OUTPUT SHAFT

(a) Using SST and a press, remove the rear ball bearing and 4th driven gear.
SST 09950-00020

(b) Remove the output spacer.

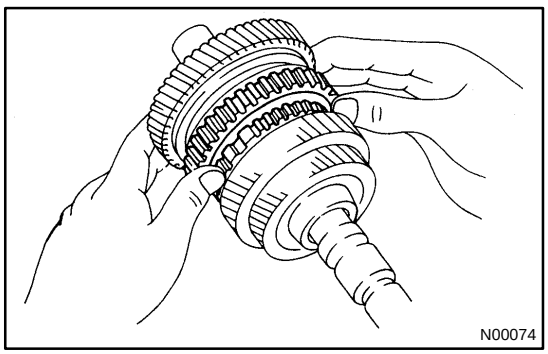

4. REMOVE 3RD DRIVEN GEAR, 2ND GEAR, NEEDLE ROLLER BEARING, SYNCHRONIZER RING AND SPACER

(a) Shift the No.1 hub sleeve into the 1st gear.

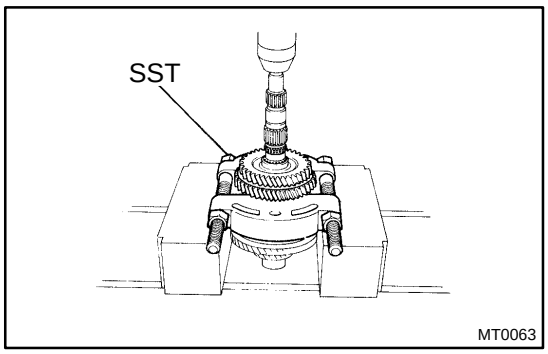

(b) Using SST and a press, remove the 3rd driven gear.
SST 09950-00020

(c) Remove the 2nd gear, needle roller bearing, synchronizer ring and spacer.

5. REMOVE SNAP RING

Using 2 screwdrivers and a hammer, tap out the snap ring.

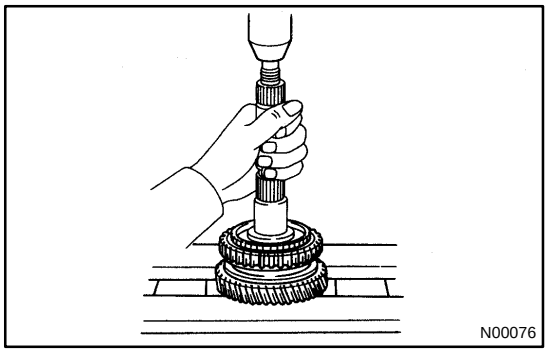

6. REMOVE NO.1 HUB SLEEVE ASSEMBLY, 1ST GEAR, SYNCHRONIZER RING, NEEDLE ROLLER BEARING, THRUST WASHER AND BALL

(a) Using a press, remove the No.1 hub sleeve assembly, 1st gear and synchronizer ring.

(b) Remove the needle roller bearing, thrust washer and ball.

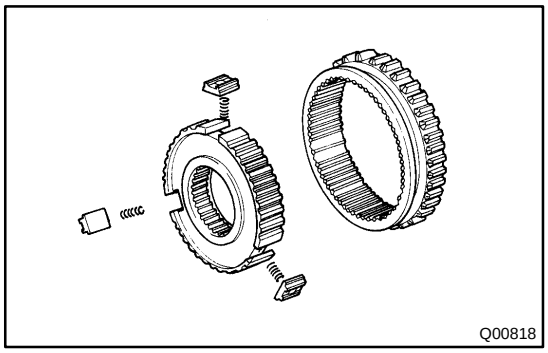

7. REMOVE NO.1 HUB SLEEVE, SHIFTING KEY AND SPRING FROM NO.1 CLUTCH HUB

Remove the 3 shifting keys and springs from the No.1 clutch hub.

CL069-03

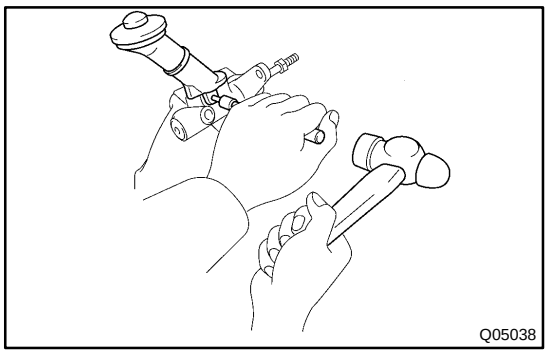

DISASSEMBLY

1. REMOVE CLEVIS

2. REMOVE RESERVOIR TANK

(a) Using a pin punch and hammer, drive out the slotted spring pin.

(b) Remove the reservoir tank and grommet.

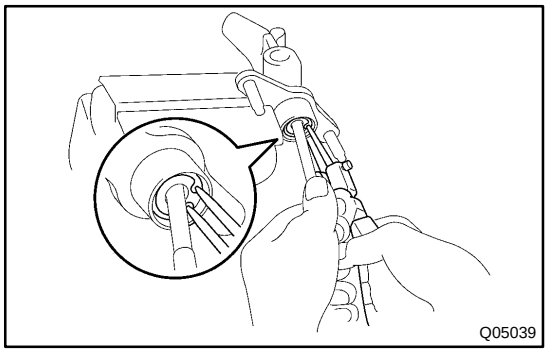

3. REMOVE PUSH ROD

Pull back the boot, and using snap ring pliers, remove the snap ring.

4. REMOVE PISTON

CL06E-03

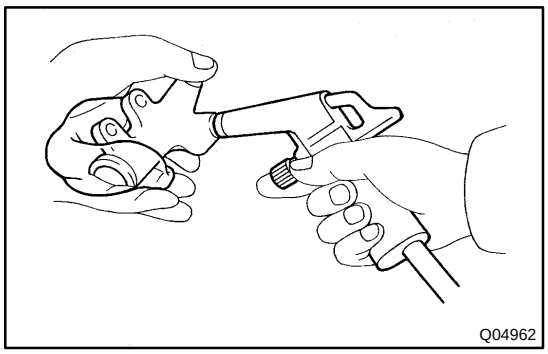

DISASSEMBLY

1. REMOVE BLEEDER PLUG

2. PULL OUT BOOT WITH PUSH ROD

3. REMOVE PISTON

Using compressed air, remove the piston with the spring from the cylinder.

SA12J-01

DISASSEMBLY

1. REMOVE DUST DEFLECTOR

Using a screwdriver, remove the dust deflector.

2. REMOVE LOWER BALL JOINT

(a) Remove the cotter pin and nut.

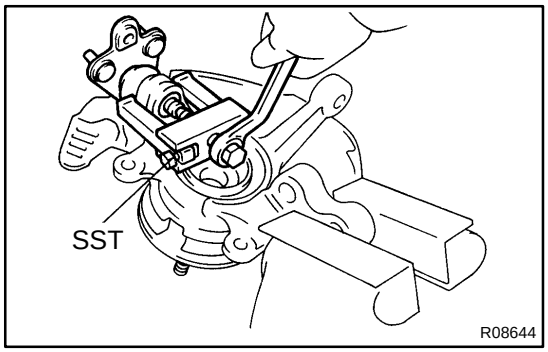

(b) Using SST, remove the lower ball joint.
SST 09628-6201 1

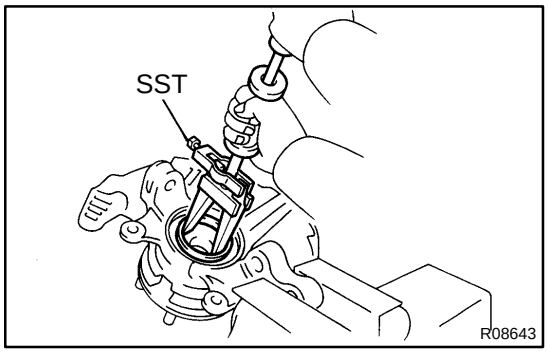

3. REMOVE OIL SEAL

Using SST, remove the inner oil seal.
SST 09308-00010

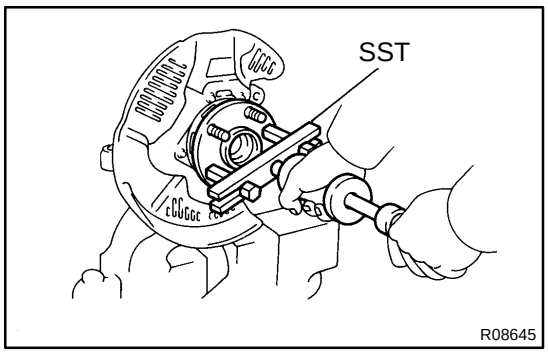

4. REMOVE AXLE HUB

(a) Using SST, remove the axle hub.
SST 09520-00031

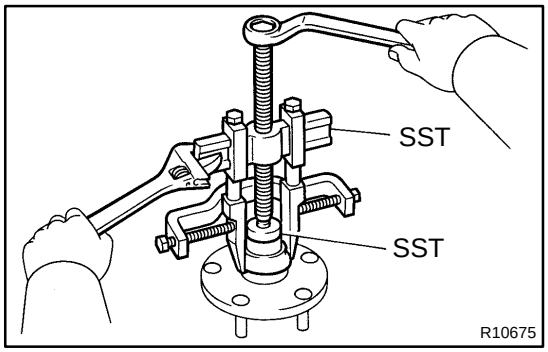

(b) Using SST, remove the inner race (outside) from the axle hub.
SST 09950-4001 1, 09950-60010 (09951-00390)

5. REMOVE DUST COVER

Using a torx socket (T30), remove the 4 bolts and dust cover.

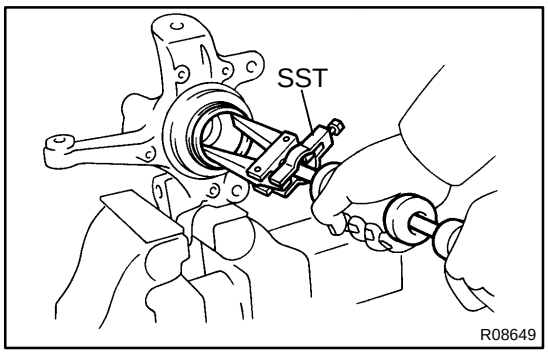

6. REMOVE OUTER OIL SEAL

Using SST, remove the outer oil seal.

SST 09308-00010

7. REMOVE BEARING FROM STEERING KNUCKLE

(a) Using snap ring pliers, remove the snap ring.

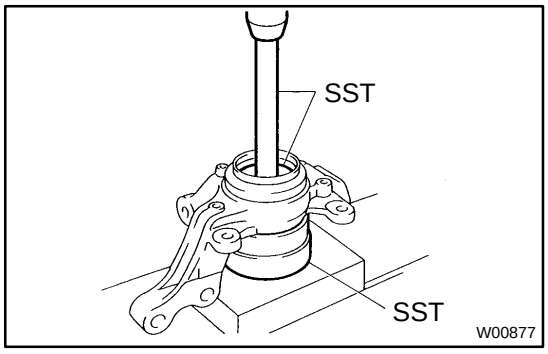

(b) Using SST and a press, remove the bearing from the steering knuckle.

SST 09527-17011, 09950-60010 (09951-00480), 09950-70010 (09951-07150)

SR0K9-02

DISASSEMBLY

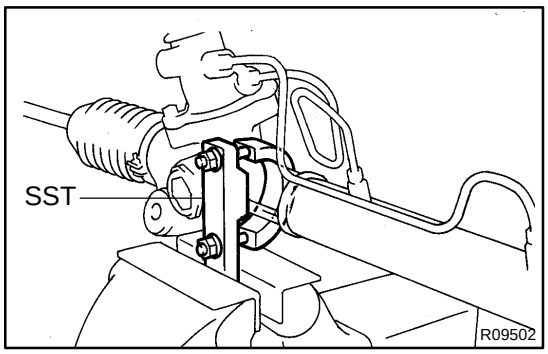

NOTICE:

When using a vise, do not overtighten it.

1. SECURE PS GEAR ASSEMBLY IN VISE

Using SST, secure the gear assembly in a vise.

SST 09612-00012

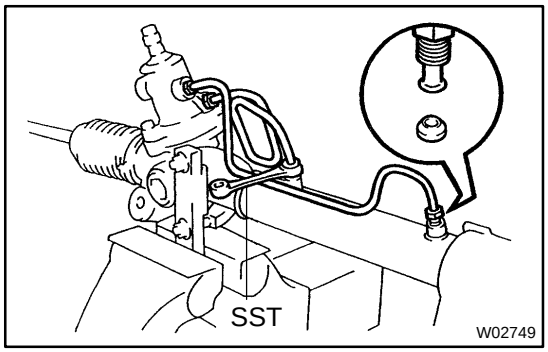

2. REMOVE 2 TURN PRESSURE TUBES

(a) Using SST, remove the tube.

SST 09633-00020

(b) Remove the 2 union seats from the rack housing.

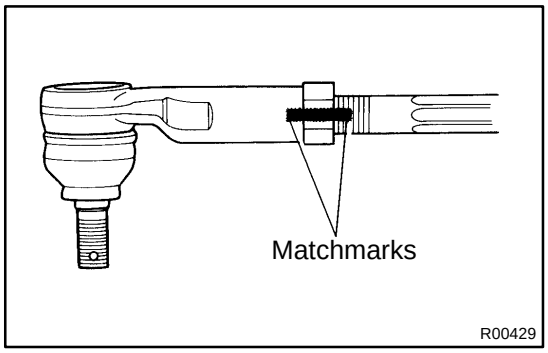

3. REMOVE RH AND LH TIE ROD ENDS AND LOCK NUTS

Place matchmarks on the tie rod end and rack end.

4. REMOVE RH AND LH CLIPS, RACK BOOTS AND CLAMPS

NOTICE:

Be careful not to damage the boot.Mark the RH and LH boots.

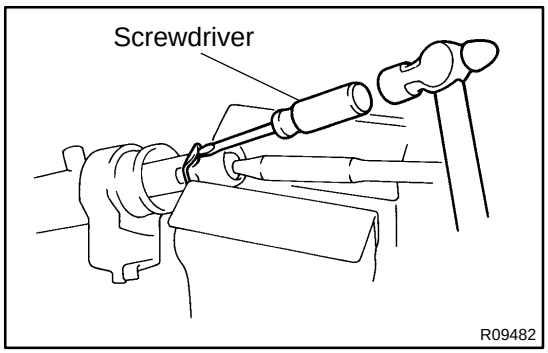

5. REMOVE RH AND LH RACK ENDS AND CLAW WASHERS

(a) Using a screwdriver and hammer, unstake the washer.

NOTICE:

Avoid any impact to the steering rack.

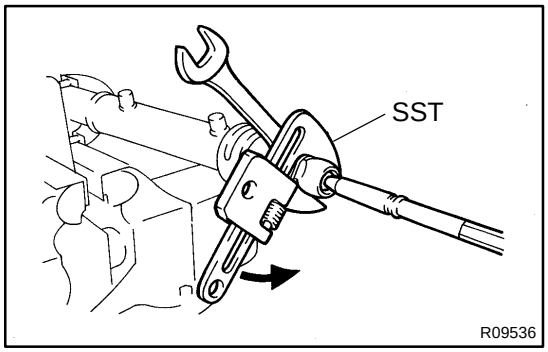

(b) Using a spanner to hold the steering rack steady, and using SST, remove the rack end.

SST 09922-10010

NOTICE:

Use SST 09922-10010 in the direction shown in the illustration.Make the RH and LH rack ends.

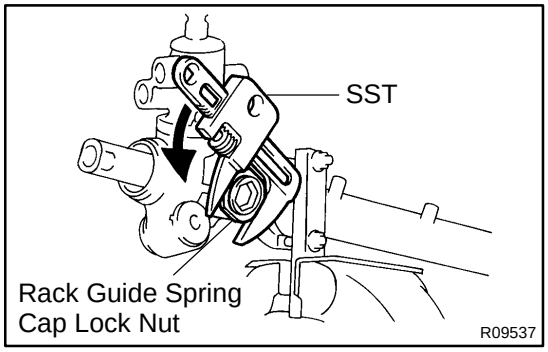

6. REMOVE RACK GUIDE SPRING CAP LOCK NUT

Using SST, remove the nut.

SST 09922-10010

NOTICE:

Use SST 09922-10010 in the direction shown in the illustration.

7. REMOVE RACK GUIDE SPRING CAP

Using a hexagon wrench (24 mm), remove the cap.

8. REMOVE RACK GUIDE SPRING, RACK GUIDE AND RACK GUIDE SEAT

Remove the seat from the guide.

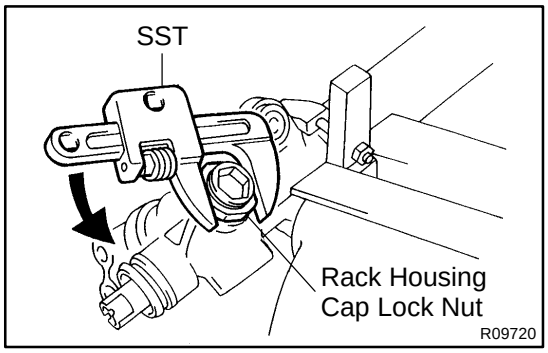

9. REMOVE RACK HOUSING CAP LOCK NUT

Using SST, remove the nut.

SST 09922-10010

NOTICE:

Use SST 09922-10010 in the direction shown in the illustration.

10. REMOVE RACK HOUSING CAP

Using a hexagon wrench (24 mm), remove the cap.

11. REMOVE BEARING

Remove the bearing from the rack housing.

12. REMOVE DUST COVER

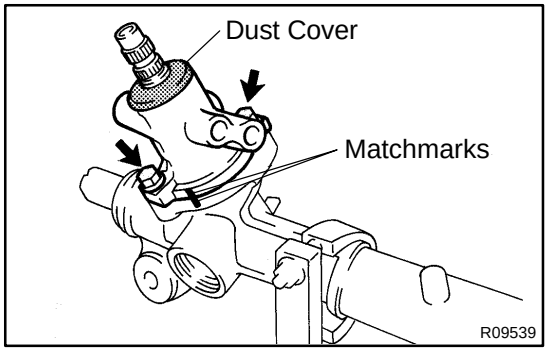

13. REMOVE CONTROL VALVE HOUSING WITH CONTROL VALVE ASSEMBLY

(a) Place matchmarks on the valve housing and rack housing.

(b) Remove the 2 bolts.

(c) Remove the O-ring from the rack housing.

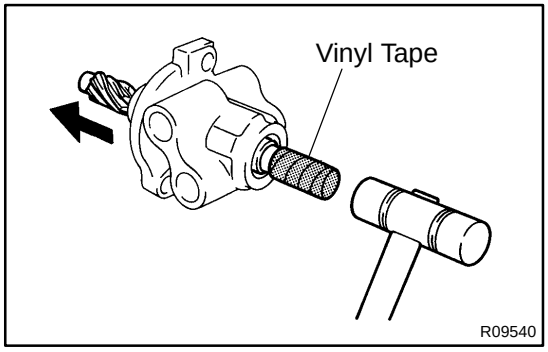

14. REMOVE CONTROL VALVE ASSEMBLY

(a) To prevent oil seal lip damage, wind vinyl tape on the serrated part of the valve shaft.

(b) Using a plastic hammer, tap out the valve assembly from the valve housing.

NOTICE:

Be careful no to damage the oil seal lip.

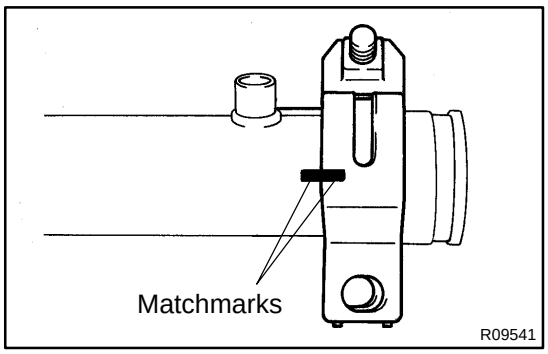

15. REMOVE RACK HOUSING NO.2 BRACKET

(a) Place matchmarks on the bracket and rack housing.

(b) Remove the bolt.

16. REMOVE RACK HOUSING NO.2 GROMMET

Remove the grommet from the rack housing No.2 bracket.

17. REMOVE CYLINDER END STOPPER

(a) Using a snap ring pliers, remove the snap ring from the rack housing.

(b) Remove the stopper from the rack housing.

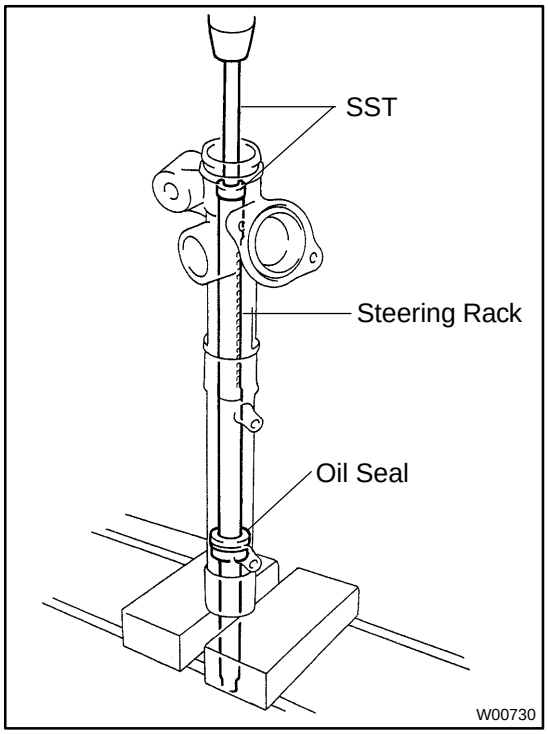

18. REMOVE STEERING RACK AND OIL SEAL

(a) Using SST, press out the rack and oil seal.

SST 09950-60010 (09951-00250),
09950-70010 (09951-07200)

NOTICE:

Take care not to drop the rack.

(b) Remove the oil seal from the rack.

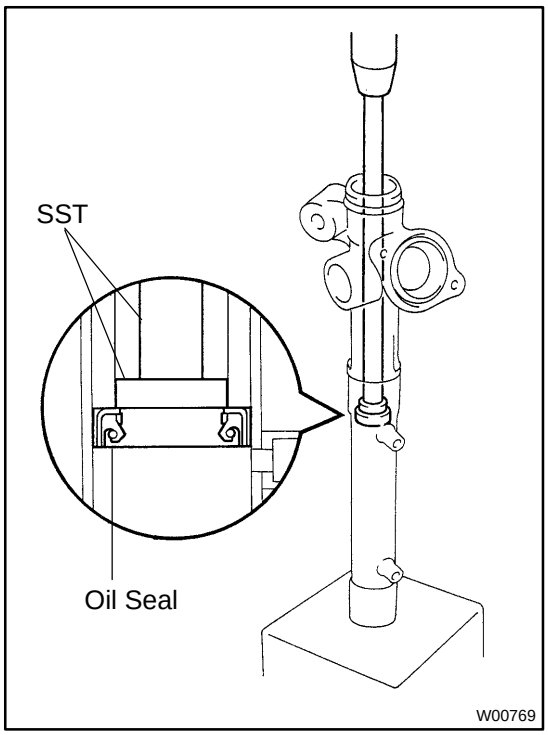

19. REMOVE OIL SEAL

Using SST, press out the oil seal.

SST 09950-60010 (09951-00290),
09950-70010 (09951-07360)

NOTICE:

Be careful not to damage the rack housing.

SA13N-01

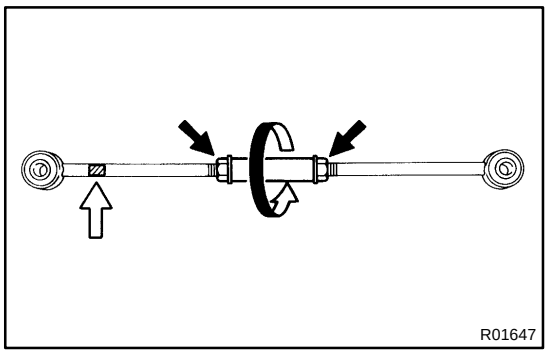

DISASSEMBLY

DISASSEMBLE NO.2 LOWER SUSPENSION ARM

(a) Loosen the 2 lock nuts.
(b) Turn the adjusting tube and disassemble the No.2 lower suspension arm.
(c) Remove the 2 lock nuts from the arm.

SA13G-02

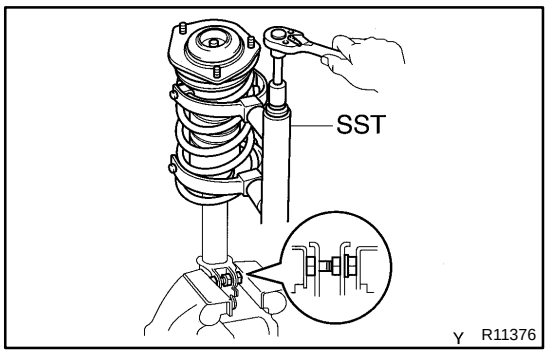

DISASSEMBLY

REMOVE COIL SPRING

(a) Install 2 nuts and a bolt to the bracket at the lower portion of the shock absorber and secure it in a vise.

(b) Using SST, compress the coil spring.
SST 09727-30020

NOTICE:

Do not use an impact wrench. It will damage the SST.

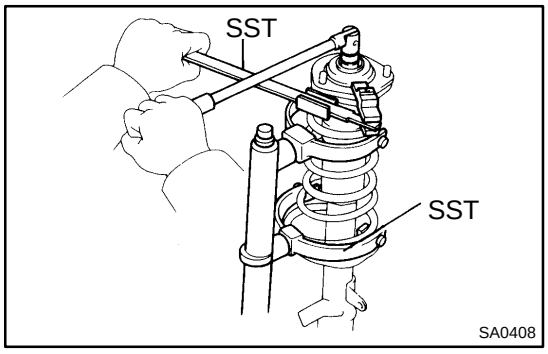

(c) Using SST to hold the suspension support, remove the nut.
SST 09729-22031

(d) Remove the collar and suspension support.

(e) Remove the coil spring.

(f) Remove the dust cover and spring bumper.

(g) Remove the lower insulator.

MX04T-02

DISASSEMBLY

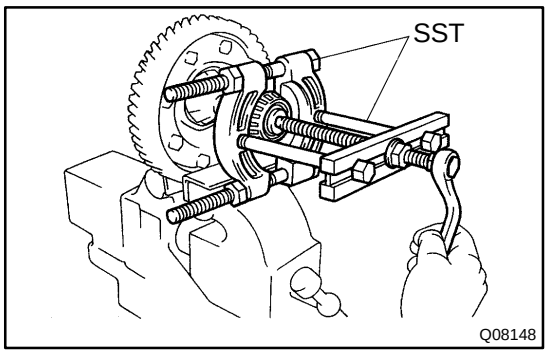

1. Vehicle Speed Sensor Drive Gear Side:
REMOVE SIDE BEARING FROM DIFFERENTIAL CASE

(a) Using SST, remove the bearing from the drive gear side of the case.
SST 09950-00020, 09950-00030

(b) Remove the vehicle speed sensor drive gear.

2. REMOVE RING GEAR

(a) Place matchmarks on the ring gear and case.

(b) Remove the 8 bolts.

(c) Using a copper hammer, tap on the ring gear to remove it from the case.

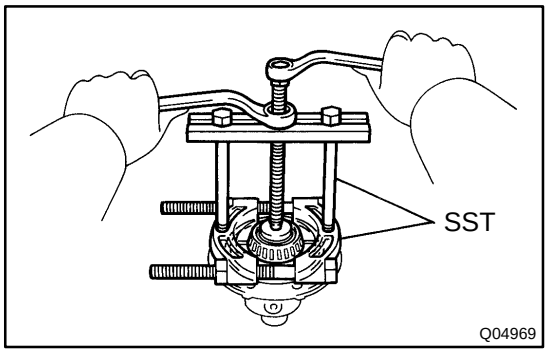

3. Ring Gear Side:
REMOVE SIDE BEARING FROM DIFFERENTIAL CASE

Using SST, remove the bearing from the ring gear side of the case.
SST 09950-00020, 09950-00030

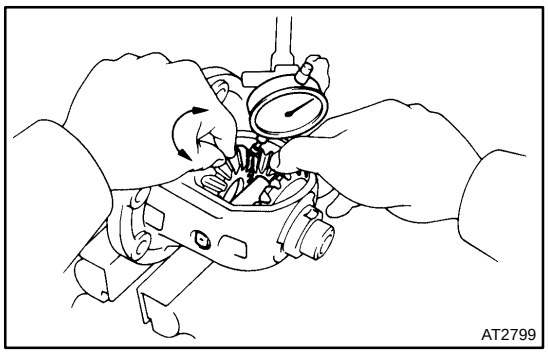

4. INSPECT SIDE GEAR BACKLASH

Using a dial indicator, measure the backlash of one side gear while holding one pinion toward the case.

Standard backlash:
0.05 - 0.20 mm (0.0020 - 0.0079 in.)

If the backlash is not within the specification, install the correct thrust washer to the side gears.

5. DISASSEMBLE DIFFERENTIAL CASE

(a) Using a pin punch and hammer, drive out the straight pin.

(b) Remove the pinion shaft from the case.

(c) Remove the 2 pinions and side gears with the 4 thrust washers from each gear.

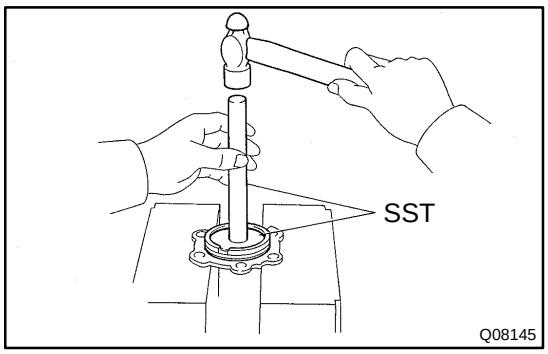

6. Transaxle Case Side:
IF NECESSARY, REPLACE DIFFERENTIAL SIDE BEARING RETAINER OIL SEAL

(a) Using SST and a hammer, drive out the oil seal from the retainer.
SST 09950- 60020 (09951- 00680), 09950- 70010 (09951-07150)

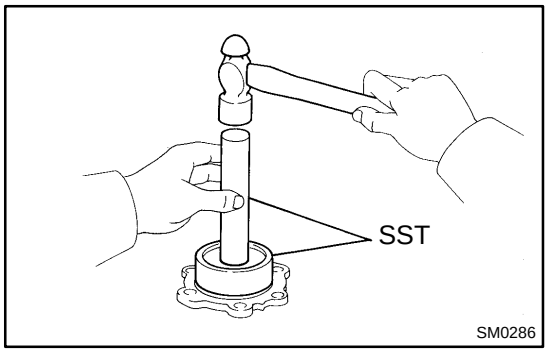

(b) Using SST and a hammer, drive in a new oil seal until its surface is flush with the case surface.
SST 09350-32014 (09351-32130, 09351-32150)

(c) Coat the lip of the oil seal with MP grease.

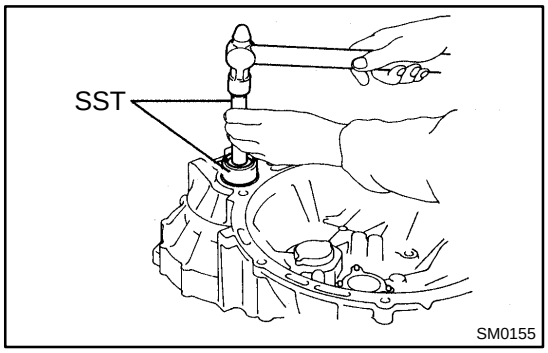

7. Transmission Case Side:
IF NECESSARY, REPLACE SIDE OIL SEAL

(a) Using a screwdriver and hammer, drive out the oil seal.

(b) Using SST and a hammer, drive in a new oil seal until its surface is flush with the case surface.
SST 09350-32014 (09351-32130, 09351-32150)

(c) Coat the lip of the oil seal with MP grease.

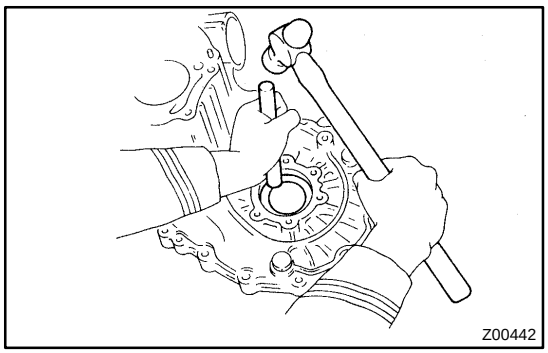

8. Transaxle Case Side:
IF NECESSARY, REPLACE SIDE BEARING OUTER RACE

(a) Using a brass bar and hammer, drive out the bearing outer race.

(b) Install the bearing retainer without an O-ring.

(c) Install and torque the 6 bolts.
Torque: 18 N·m (185 kgf·cm, 13 ft·lbf)

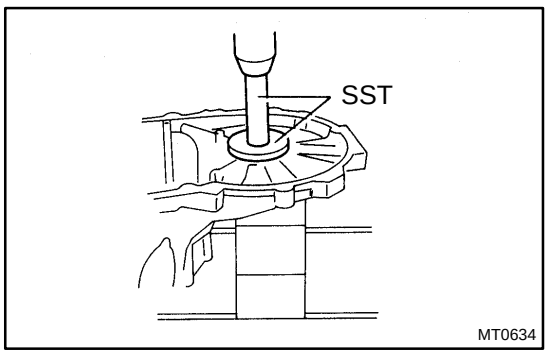

(d) Place the thinnest shim into the case.

(e) Using SST and a press, install a new bearing outer race.
SST 09950- 60020 (09951- 00680), 09950- 70010 (09951-07150)

(f) Remove the 6 bolts.

(g) Remove the bearing retainer and shim.

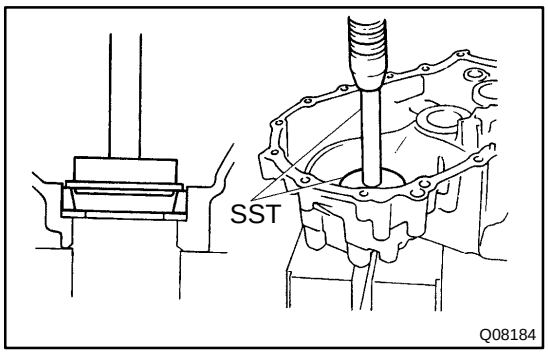

9. Transaxle Case Side:
IF NECESSARY, REPLACE SIDE BEARING OUTER RACE

(a) Using a brass bar and hammer, drive out the bearing outer race and shim.

(b) Place the shim into the case.

(c) Using SST and a press, install a new bearing outer race.
SST 09950- 60020 (09951- 00680), 09950- 70010 (09951-07150)

MX04K-02

DISASSEMBLY

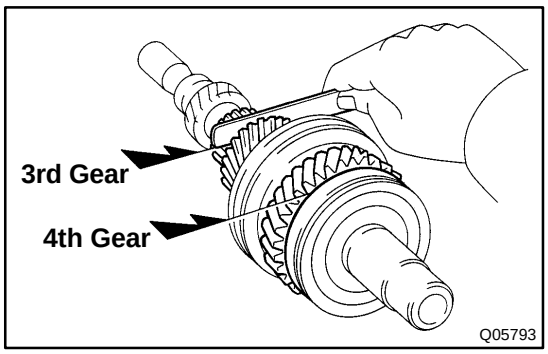

1. INSPECT 3RD AND 4TH GEARS THRUST CLEARANCE

Using a feeler gauge, measure the clearance.

Standard clearance:
3rd gear: 0.10 - 0.25 mm (0.0039 - 0.0098 in.)
4th gear: 0.20 - 0.45 mm (0.0079 - 0.0177 in.)
Maximum clearance:
3rd gear: 0.30 mm (0.0118 in.)
4th gear: 0.50 mm (0.0197 in.)

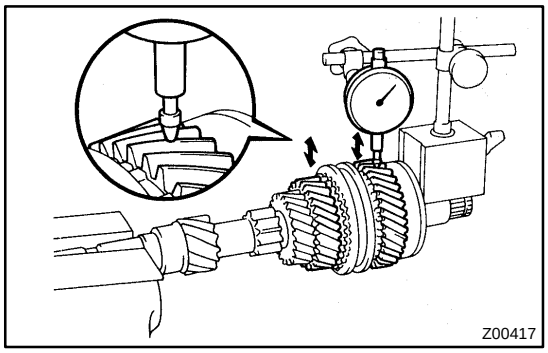

2. INSPECT 3RD AND 4TH GEARS RADIAL CLEARANCE

Using a dial indicator, measure the radial clearance between the gear and shaft.

Standard clearance:
0.009 - 0.053 mm (0.0004 - 0.0021 in.)
Maximum clearance:
0.070 mm (0.0028 in.)

If the clearance exceeds the maximum, replace the gear, needle roller bearing or shaft.

3. REMOVE SNAP RING

Using 2 screwdrivers and a hammer, tap out the snap ring.

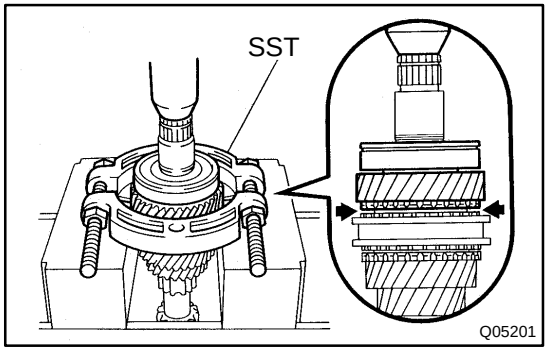

4. REMOVE REAR BEARING, 4TH GEAR, NEEDLE ROLLER BEARING, SPACER AND SYNCHRONIZER RING FROM INPUT SHAFT

(a) Using SST and a press, remove the 4th gear and rear bearing.
SST 09950-00020

(b) Remove the needle roller bearings, spacer and synchronizer ring.

5. REMOVE SNAP RING

Using a snap ring expander, remove the snap ring.

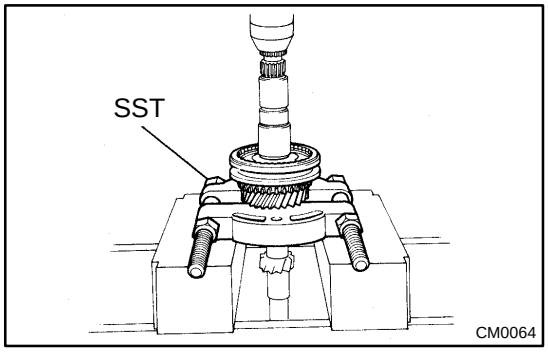

6. REMOVE NO.2 HUB SLEEVE ASSEMBLY, 3RD GEAR SYNCHRONIZER RING AND NEEDLE ROLLER BEARING

Using SST and a press, remove the No.2 hub sleeve, 3rd gear, synchronizer ring and needle roller bearings.

SST 09950-00020

NOTICE:

Be careful not to mistake the 3rd gear synchronizer ring for the 4th gear synchronizer ring.

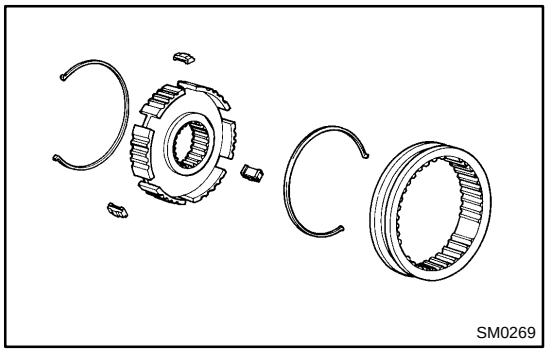

7. REMOVE NO.2 HUB SLEEVE, SHIFTING KEY AND SPRING FROM NO.2 CLUTCH HUB

Using a screwdriver, remove the 3 shifting keys and 2 springs from the No.2 clutch hub.

MX0E2-01

DISASSEMBLY

1. REMOVE RELEASE FORK AND BEARING

2. REMOVE BACK-UP LIGHT SWITCH

Torque: 44 N·m (450 kgf·cm, 33 ft·lbf)

3. REMOVE BOLT AND VEHICLE SPEED SENSOR

Torque: 5.4 N·m (55 kgf·cm, 48 in.·lbf)

4. REMOVE RELEASE BEARING RETAINER

Remove the 3 bolts and retainer.

Torque: 7.4 N·m (75 kgf·cm, 65 in.·lbf)

5. REMOVE ENGINE MOUNT BRACKET AND SELECTING BELLCRANK

(a) Remove the 3 bolts and engine mount bracket.

Torque: 52 N·m (530 kgf·cm, 38 ft·lbf)

(b) Remove the 2 bolts and selecting bellcrank.

Torque: 37 N·m (380 kgf·cm, 27 ft·lbf)

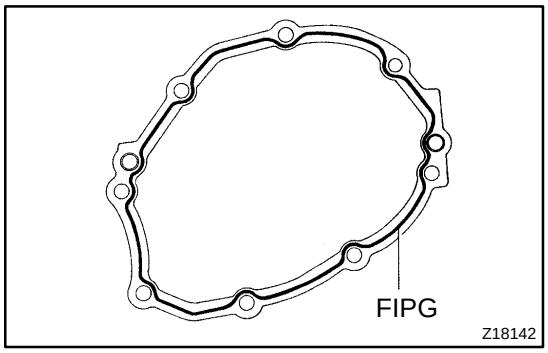

6. REMOVE TRANSMISSION CASE COVER

(a) Remove the 8 bolts.

Sealant:

Part No.08833 - 00080, THREE BOND 1344, LOCTITE 242 or equivalent

Torque: 29 N·m (300 kgf·cm, 22 ft·lbf)

(b) Using a plastic hammer, tap the transmission case cover and remove it.

FIPG:

Part No. 08826 - 00090, THREE BOND 1281 or equivalent

7. REMOVE LOCK BALL ASSEMBLY

Sealant:

Part No.08833 - 00080, THREE BOND 1344, LOCTITE 242 or equivalent

Torque: 29 N·m (300 kgf·cm, 22 ft·lbf)

8. REMOVE SHIFT AND SELECT LEVER ASSEMBLY

HINT:

At the time of reassembly, please refer to the following item.

Apply FIPG to the underside of the flanged portion of the control shaft cover.

FIPG:

Part No. 08826 - 00090, THREE BOND 1281 or equivalent

Torque: 37 N·m (375 kgf·cm, 27 ft·lbf)

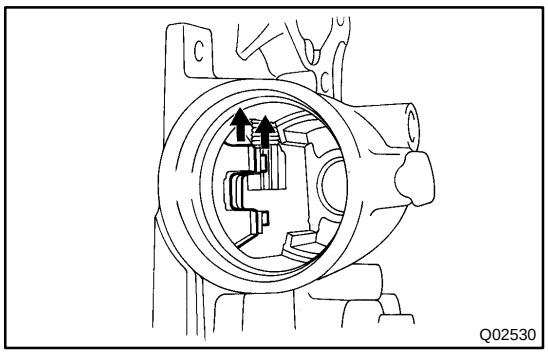
Q02530

9. REMOVE OUTPUT SHAFT LOCK NUT

(a) Unstake the nut.

(b) Engage the gear to the double meshing.

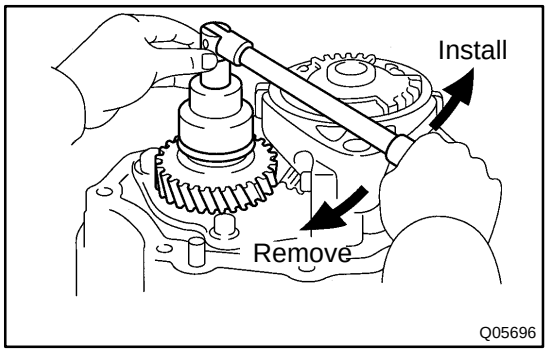

Q05696

(c) Rotate the lock nut clockwise and remove it.
Torque: 123 N·m (1,250 kgf·cm, 90 ft·lbf)

HINT:

The lock nut has LH threads.

(d) Disengage the double meshing of the gear.

10. REMOVE NO.3 HUB SLEEVE AND NO.3 SHIFT FORK

(a) Remove the No.3 shift fork set bolt.
Torque: 18 N·m (185 kgf·cm, 13 ft·lbf)

(b) Remove the No.3 hub sleeve and No.3 shift fork.

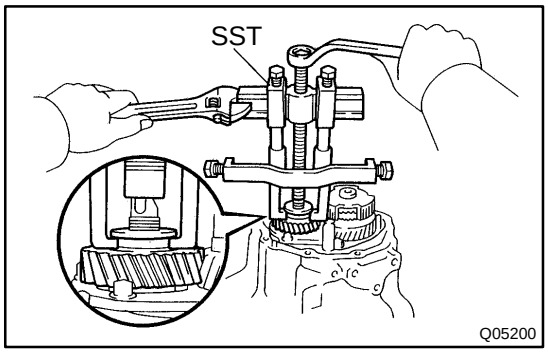

Q05200

11. REMOVE 5TH DRIVEN GEAR

Using SST, remove the 5th driven gear.
SST 09950-40010

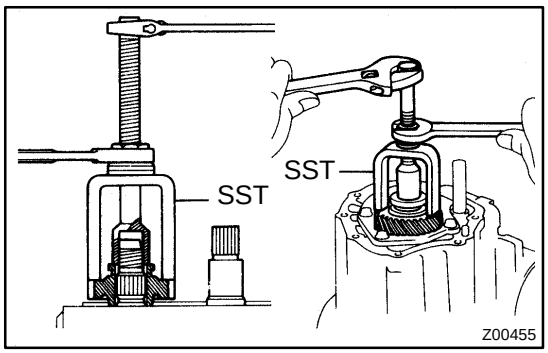

Z00455

HINT:

At the time of reassembly, please refer to the following item.

Using SST, install the 5th driven gear.
SST 09309-12020

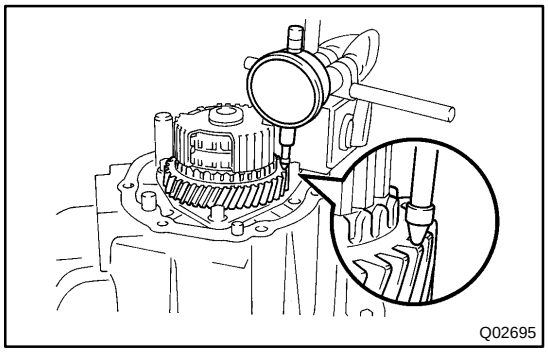
Q02695

12. MEASURE 5TH GEAR THRUST CLEARANCE

Using a dial indicator, measure the thrust clearance.
Standard clearance:
0.20 - 0.40 mm (0.0079 - 0.0157 in.)
Maximum clearance:
0.45 mm (0.0177 in.)

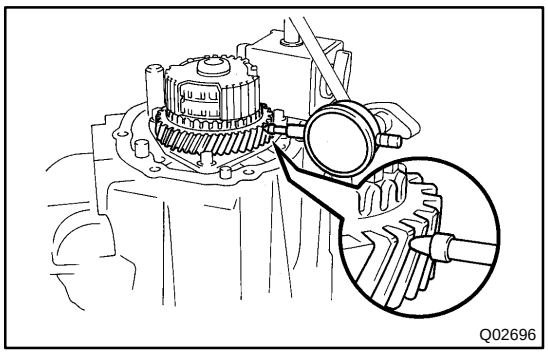
Q02696

13. MEASURE 5TH GEAR RADIAL CLEARANCE

Using a dial indicator, measure the radial clearance.

Standard clearance:
0.009 - 0.050 mm (0.0004 - 0.0020 in.)
Maximum clearance:
0.070 mm (0.0028 in.)

If the clearance exceeds the maximum, replace the gear, needle roller bearing or input shaft.

14. REMOVE NO.3 CLUTCH HUB AND 5TH GEAR

(a) Using 2 screwdrivers and a hammer, tap out the snap ring.

HINT:

At the time of reassembly, please refer to the following item.
Select a snap ring that allows the minimum axial play.

Mark	Thickness mm (in.)	Mark	Thickness mm (in.)
13	2.20-2.25 (0.0866-0.0886)	21	2.60-2.65 (0.1024-0.1043)
14	2.25-2.30 (0.0886-0.0906)	22	2.65-2.70 (0.1043-0.1063)
15	2.30-2.35 (0.0906-0.0925)	23	2.70-2.75 (0.1063-0.1083)
16	2.35-2.40 (0.0925-0.0945)	24	2.75-2.80 (0.1083-0.1102)
17	2.40-2.45 (0.0945-0.0965)	25	2.80-2.85 (0.1102-0.1122)
18	2.45-2.50 (0.0965-0.0984)	26	2.85-2.90 (0.1122-0.1142)
19	2.50-2.55 (0.0984-0.1004)	27	2.90-2.95 (0.1142-0.1161)
20	2.55-2.60 (0.1004-0.1024)	-	-

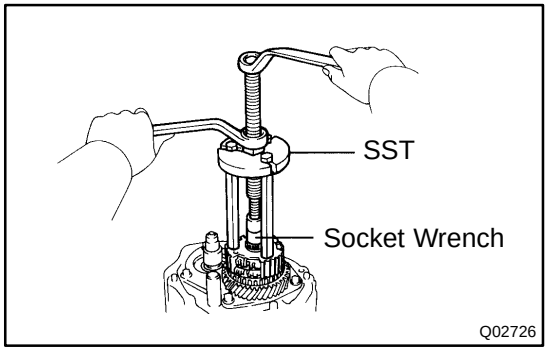

Q02726

(b) Using SST and a socket wrench, remove the No.3 clutch hub with the synchronizer ring.
SST 09950-30010

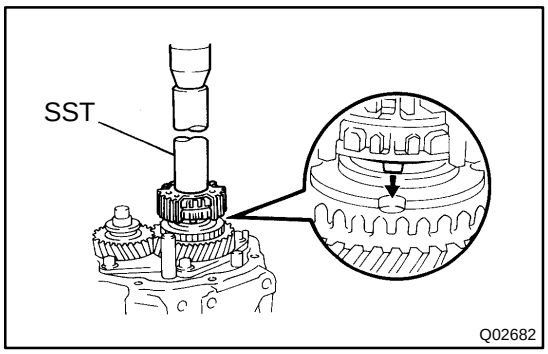

HINT:
At the time of reassembly, please refer to the following item.
Using SST and a press, install the No.3 clutch hub assembly.
SST 09612-2201 1

(c) Remove the 5th gear.

15. REMOVE NEEDLE ROLLER BEARING

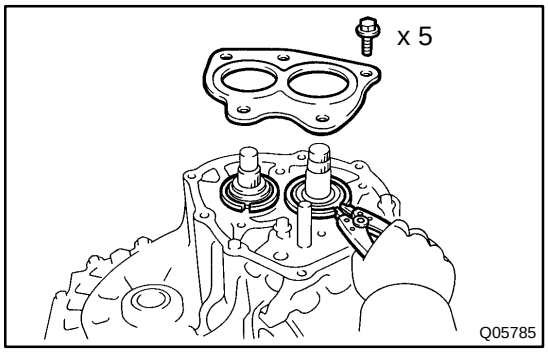

16. REMOVE REAR BEARING RETAINER

Remove the 5 bolts and retainer.

Sealant:
Part No.08833 - 00070, THREE BOND 1324 or equivalent
Torque: 42 N·m (430 kgf·cm, 31 ft·lbf)

17. REMOVE BEARING SNAP RING

Using a snap ring expander, remove the 2 snap rings.

HINT:
If it is difficult to remove and install the snap rings, pull up the shafts.

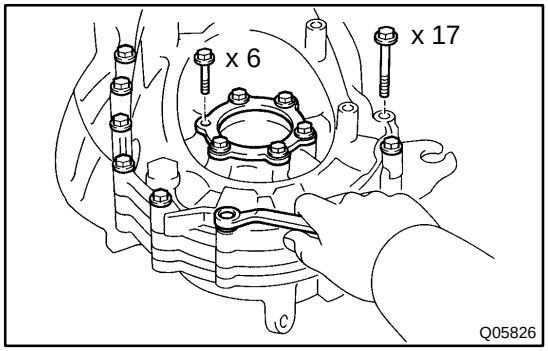

18. REMOVE REVERSE IDLER GEAR SHAFT LOCK BOLT AND GASKET
Torque: 29 N·m (300 kgf·cm, 22 ft·lbf)

19. REMOVE DIFFERENTIAL SIDE BEARING RETAINER AND SHIM

Remove the 6 bolts, retainer and shim.

Sealant:
Part No.08833 - 00080, THREE BOND 1344, LOCTITE 242 or equivalent
Torque: 18 N·m (185 kgf·cm, 13 ft·lbf)

20. REMOVE TRANSMISSION CASE

(a) Remove the 17 bolts.
Torque: 29 N·m (300 kgf·cm, 22 ft·lbf)

(b) Using a plastic hammer, tap the transmission case and remove it.
FIPG:
Part No. 08833 - 00090, THREE BOND 1281 or equivalent

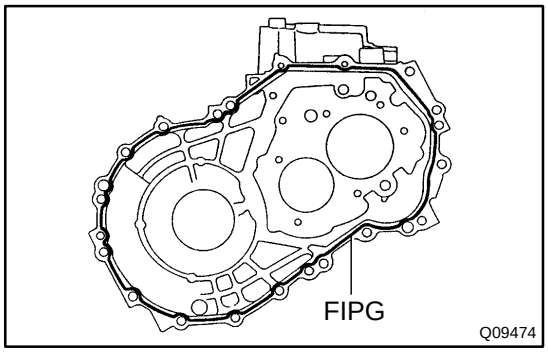

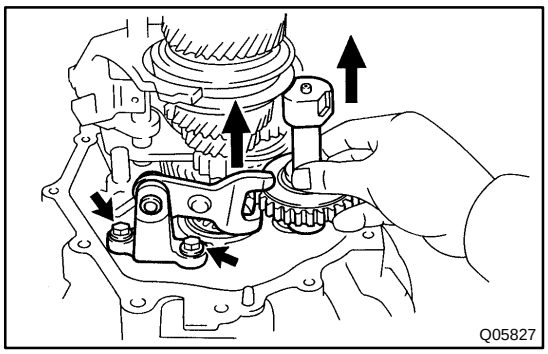

21. REMOVE REVERSE IDLER GEAR AND SHAFT

(a) Pull out the shaft.

(b) Remove the idler gear and thrust washer.

22. REMOVE REVERSE SHIFT ARM

(a) Shift the fork shaft into reverse.

(b) Remove the 2 bolts and pull off the reverse shift arm.

Torque: 18 N·m (185 kgf·cm, 13 ft·lbf)

23. REMOVE NO.1 SHIFT FORK SHAFT, NO.1 SHIFT HEAD, NO.1 AND NO.2 SHIFT FORKS, REVERSE SHIFT FORK WITH INTERLOCK PIN, INPUT SHAFT ASSEMBLY AND OUTPUT SHAFT ASSEMBLY

24. REMOVE DIFFERENTIAL CASE ASSEMBLY

25. REMOVE MAGNET FROM TRANSAXLE CASE

26. REMOVE NO.2 SHIFT FORK SHAFT

(a) Using a hexagon wrench, remove the straight screw plug.

Sealant:

Part No. 08833 - 00080, THREE BOND 1344, LOCTITE 242 or equivalent

Torque: 13 N·m (130 kgf·cm, 9 ft·lbf)

(b) Using a pin punch and hammer, drive out the slotted spring pin.

(c) Pull out the shaft.

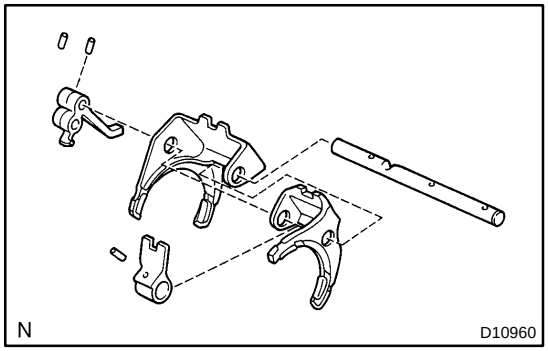

27. SEPARATE NO.1 SHIFT FORK SHAFT, NO.1 SHIFT HEAD, NO.1, NO.2 SHIFT FORKS AND REVERSE SHIFT FORK

(a) Mount the shift forks to the vise.

(b) Using a pin punch and hammer, drive out the slotted spring pin from the No.1 fork shaft.

(c) Using a pin punch and hammer, drive out the slotted spring pin from the No.1 fork shaft, as shown.

(d) Separate the No.1 shift fork shaft, No.1 shift head, No.1 and No.2 shift forks and reverse shift fork.

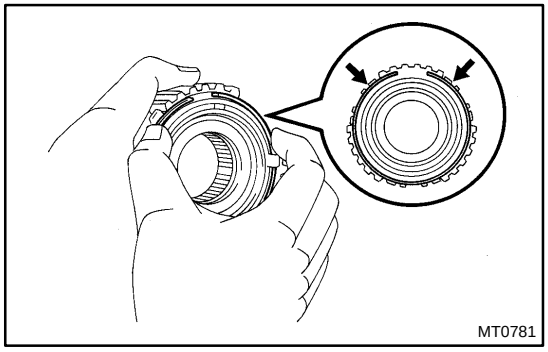

28. REMOVE NO.5 SYNCHRONIZER RING WITH KEY SPRING FROM NO.3 CLUTCH HUB

(a) Remove the No.5 synchronizer ring with the key spring from the No.3 clutch hub.

(b) Using a screwdriver, remove the snap ring.

HINT:

Wrap vinyl tape on the screwdriver to prevent damaging the synchronizer ring.

(c) Remove the synchronizer rings.

MX04O-02

DISASSEMBLY

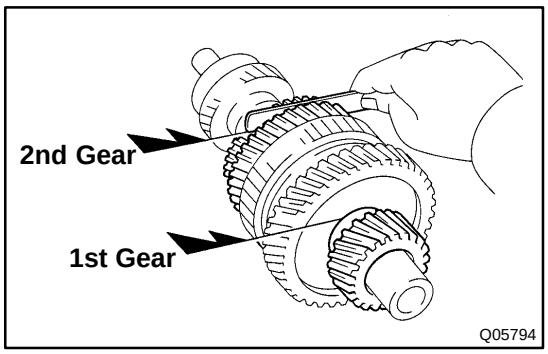

1. INSPECT 1ST AND 2ND GEARS THRUST CLEARANCE

Using a feeler gauge, measure the thrust clearance.

Standard clearance:
1st gear: 0.10 - 0.29 mm (0.0039 - 0.0114 in.)
2nd gear: 0.20 - 0.44 mm (0.0079 - 0.0173 in.)
Maximum clearance:
1st gear: 0.35 mm (0.0138 in.)
2nd gear: 0.50 mm (0.0197 in.)

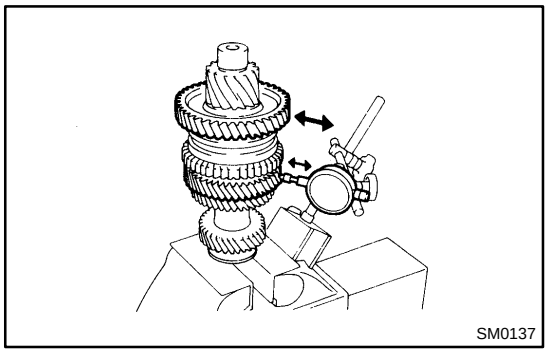

2. INSPECT 1ST AND 2ND GEARS RADIAL CLEARANCE

Using a dial indicator, measure the radial clearance between the gear and shaft.

Standard clearance:
0.009 - 0.053 mm (0.0004 - 0.0021 in.)
Maximum clearance:
0.070 mm (0.0028 in.)

If the clearance exceeds the maximum, replace the gear, needle roller bearing or shaft.

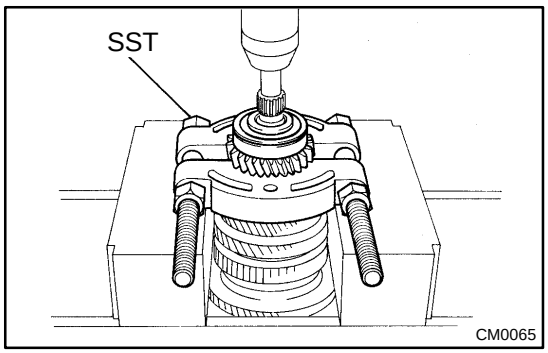

3. REMOVE REAR BALL BEARING, 4TH DRIVEN GEAR AND OUTPUT GEAR SPACER

(a) Using SST and a press, remove the rear ball bearing and 4th driven gear.
SST 09950-00020

(b) Remove the output gear spacer and ball.

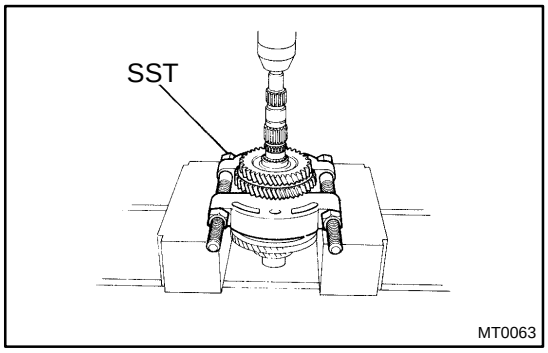

4. REMOVE 3RD DRIVEN GEAR, 2ND GEAR, NEEDLE ROLLER BEARING AND SYNCHRONIZER RING

(a) Shift the No.1 hub sleeve into the 1st gear.

(b) Using SST and a press, remove the 3rd driven gear and 2nd gear.
SST 09950-00020

(c) Remove the needle roller bearing and synchronizer rings.

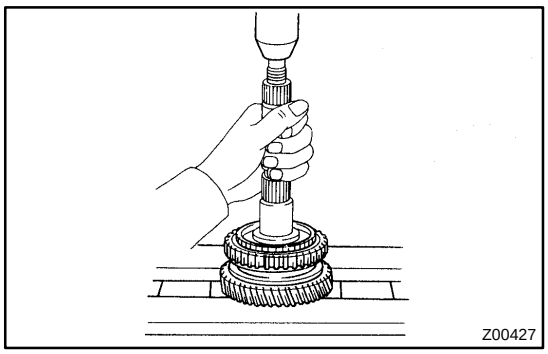

5. REMOVE NO.1 HUB SLEEVE ASSEMBLY, 1ST GEAR, SYNCHRONIZER RING, NEEDLE ROLLER BEARING, THRUST WASHER AND LOCKING BALL

(a) Using a press, remove the No.1 hub sleeve, 1st gear and synchronizer ring.

(b) Remove the needle roller bearing and locking ball.

(c) Using a screwdriver and hammer, drive out the thrust washer.

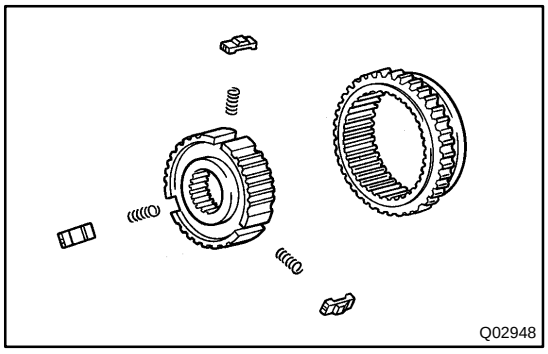

6. REMOVE NO.1 HUB SLEEVE, 3 SHIFTING KEYS AND SPRINGS FROM NO.1 CLUTCH HUB

SR0K3-03

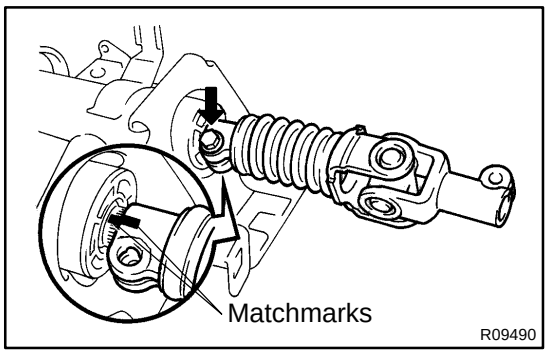

DISASSEMBLY

NOTICE:

When using a vise, do not overtighten it.

1. REMOVE INTERMEDIATE SHAFT

(a) Remove the bolt.

(b) Place matchmarks on the intermediate shaft and main shaft.

2. REMOVE KEY CYLINDER ILLUMINATION

Remove the screw.

3. REMOVE WIRING HARNESS CLAMP AND COLUMN PROTECTOR

Remove the 2 screws.

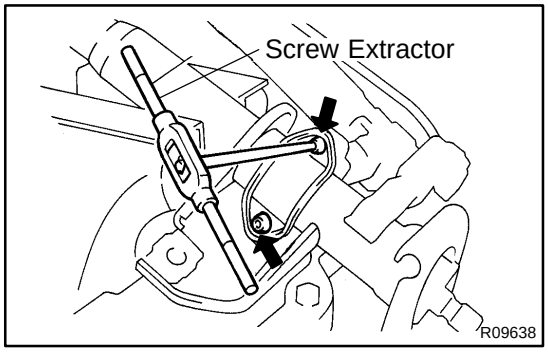

4. REMOVE COLUMN UPPER BRACKET AND COLUMN UPPER CLAMP

(a) Using a centering punch, mark the center of the 2 tapered-head bolts.

(b) Using a 4-5 mm (0.16-0.20 in.) drill,drill into the 2 bolts.

(c) Using a screw extractor, remove the 2 bolts.

5. REMOVE COMPRESSION SPRING

(a) Using a torx socket wrench, remove the torx bolt.

(b) Remove the 2 bushings from the spring.

6. REMOVE 3 TENSION SPRINGS

7. REMOVE TURN SIGNAL BRACKET

Remove the 2 bolts.

8. Tilt lever side
REMOVE 2 TILT LEVER RETAINERS

Remove the nut, E-ring and collar.

9. Tilt sub lever side
REMOVE 2 TILT LEVER RETAINERS

Remove the nut and E-ring.

10. REMOVE 2 TILT PAWL STOPPERS

11. REMOVE 2 TILT PAWLS

(a) Remove the bolt, nut and washer.

(b) Remove the tilt lever assembly set bolt.

12. REMOVE TILT LEVER, TILT SUB LEVER, TILT LEVER ASSEMBLY AND TILT LEVER LOCK SHAFT

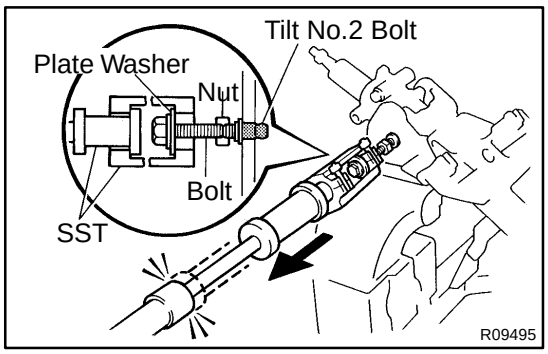

13. REMOVE COLUMN UPPER TUBE WITH MAIN SHAFT ASSEMBLY

(a) Set SST, a nut (10 mm nominal diameter, 1.25 mm pitch), plate washer (36 mm outer diameter) and bolt (10 mm nominal diameter, 1.25 mm pitch, 50 mm length), as shown.

SST 09910-00015 (09911-0001 1, 09912-00010)

Reference:

Nut: 90170-10004

Plate washer: 90201-10201

Bolt: 91111-51050

(b) Remove the 2 tilt No.2 bolts by using the sliding hammer on SST.

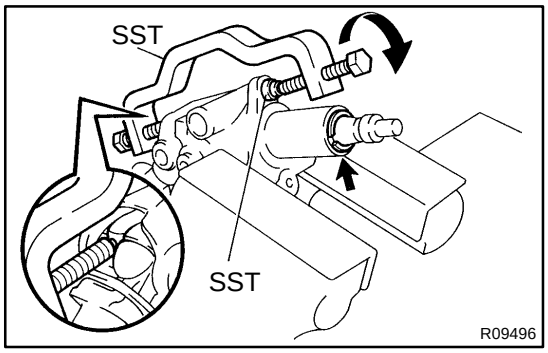

14. REMOVE MAIN SHAFT ASSEMBLY

(a) Using SST, compress the compression spring.

SST 09950-4001 1 (09957-04010, 09958-04010)

NOTICE:

Do not bend the universal joint of the shaft assembly more than 20˚.

(b) Using a snap ring expander, remove the snap ring.

(c) Remove the shaft assembly from the column upper tube.

(d) Remove the compression spring and bearing thrust collar from the shaft assembly.

BO49L-01

DISASSEMBLY

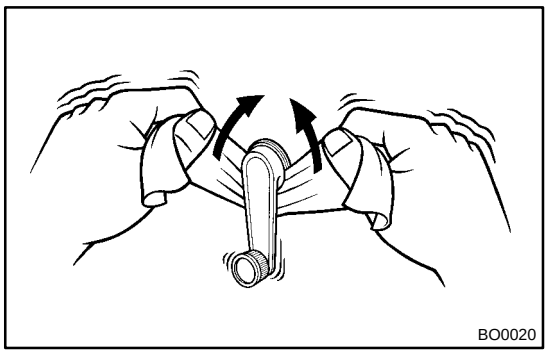

1. w/o Power Window:
REMOVE REGULATOR HANDLE

Pull off the snap ring with a shop rag and remove the regulator handle and plate.

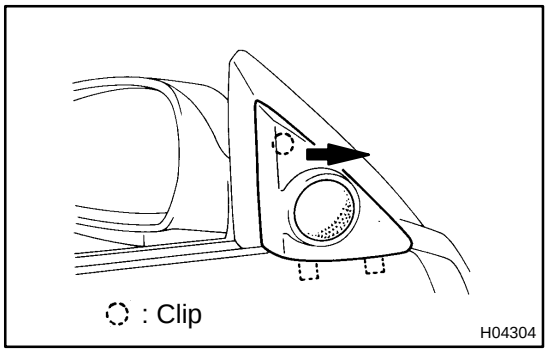

2. REMOVE TWEETER SPEAKER COVER

Using a screwdriver, remove the tweeter speaker cover.

HINT:

Tape the screwdriver tip before use.

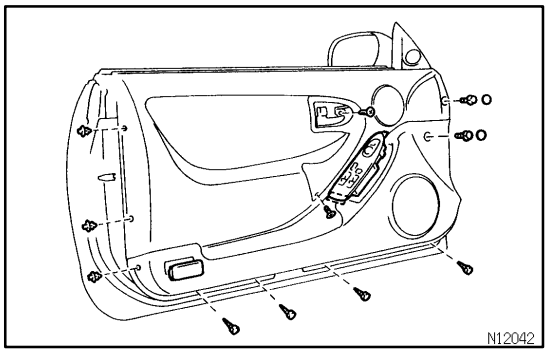

3. REMOVE INSIDE HANDLE BEZEL

4. w/ Power Window:
REMOVE POWER WINDOW SWITCH

5. REMOVE COURTESY LIGHT

6. REMOVE DOOR TRIM

(a) Remove the 2 plug hole covers, 8 screws and 3 clips.

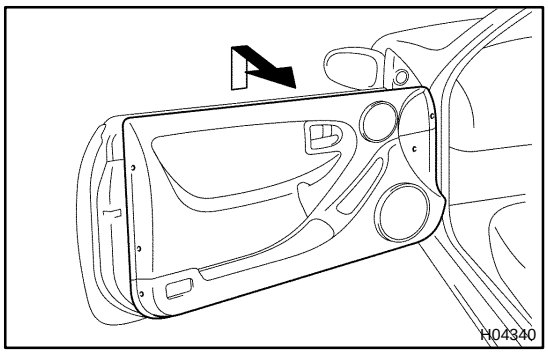

(b) Pull the door trim upward to remove it.

7. REMOVE FRONT UPPER SPEAKER

(a) Disconnect the connector.

(b) Remove the 2 screws and front upper speaker.

8. REMOVE FRONT LOWER SPEAKER

(a) Disconnect the connector.

(b) Remove the 4 screws and front lower speaker.

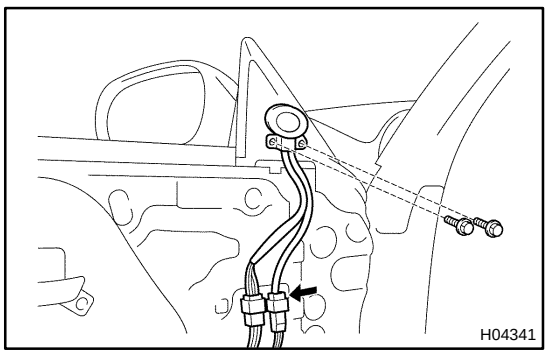

9. REMOVE TWEETER SPEAKER

Disconnect the connector, then remove the 2 bolts and tweeter speaker.

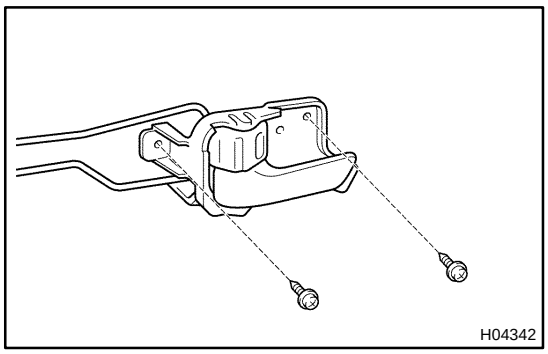

10. REMOVE INSIDE HANDLE

(a) Remove the 2 screws.

(b) Disconnect the 2 links, then remove the inside handle.

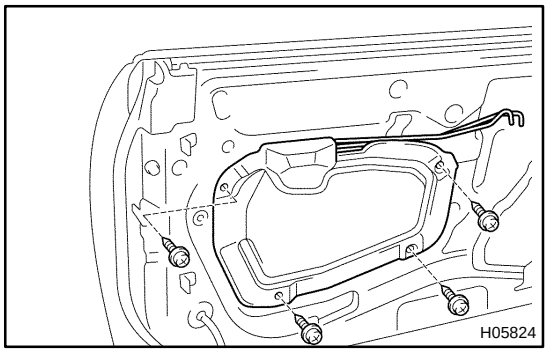

11. REMOVE SERVICE HOLE COVER

12. REMOVE INSIDE PANEL FRAME

Remove the 4 screws and inside panel frame.

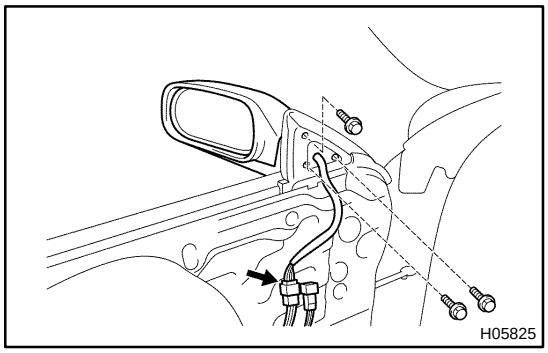

13. REMOVE OUTSIDE REAR VIEW MIRROR

Disconnect the connector, then remove the 3 bolts and outside rear view mirror.

14. REMOVE WEATHER STRIP

15. REMOVE DOOR WINDOW UPPER STOPS

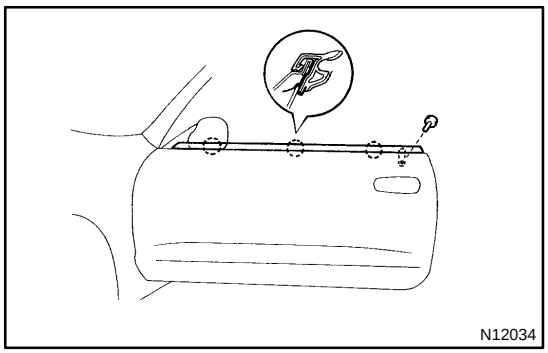

16. REMOVE DOOR BELT MOULDING

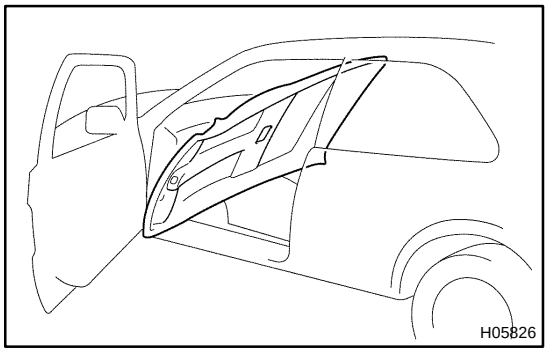

17. REMOVE DOOR GLASS

(a) Open the door glass until the nuts appear in the service hole.

(b) Remove the 3 nuts and door glass.

NOTICE:

Be careful not to drop the door glass.

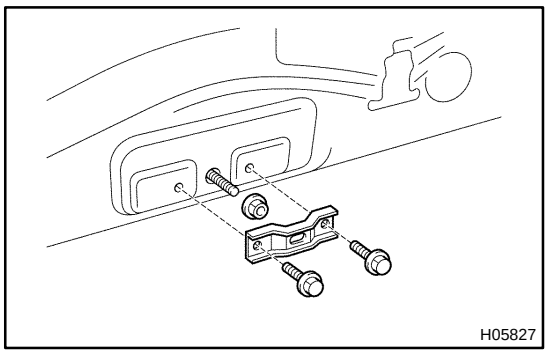

18. REMOVE WINDOW REGULATOR

(a) Remove the 2 bolts and window guide lower plate.

(b) Remove the setting nut.

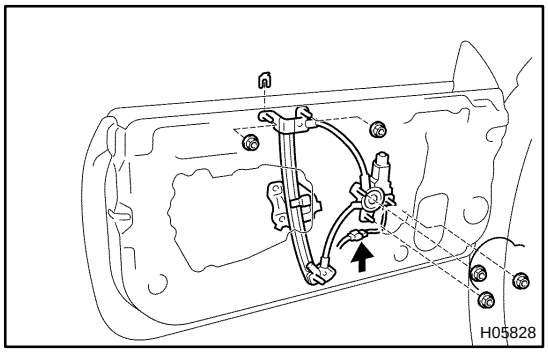

(c) Remove the 5 nuts and window regulator.

(d) w/ Power Window:
Disconnect the connector.

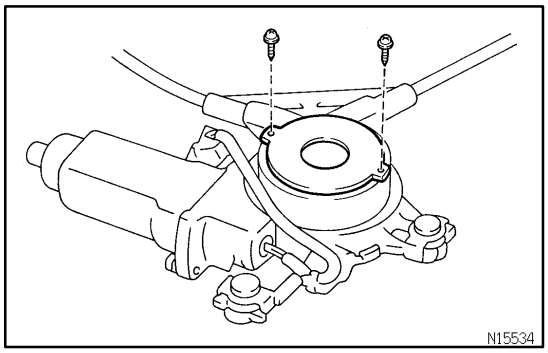

(e) w/ Power Window:
Remove the 2 screws and cover plate.

HINT:
The screws and cover plate can be used again.

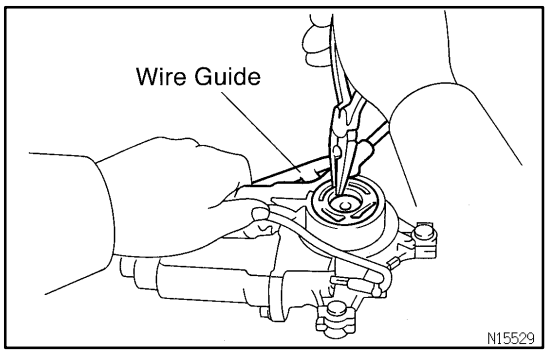

(f) w/ Power Window:
Remove the drum and wire guide from motor.

NOTICE:
Do not use a screwdriver etc. to help remove them.

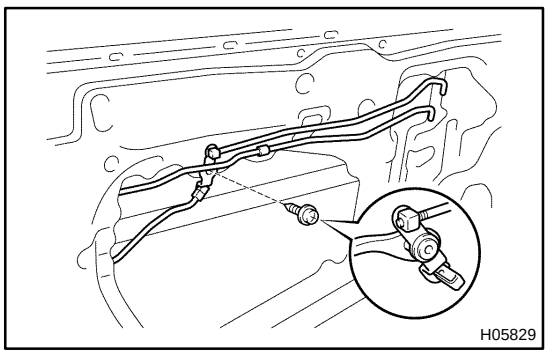

19. REMOVE DOOR LOCK

(a) Disconnect the open link and locking link No.1 from the bellcrank.

(b) Remove the bellcrank.

(c) w/ Power Door Lock:
Disconnect the connector.

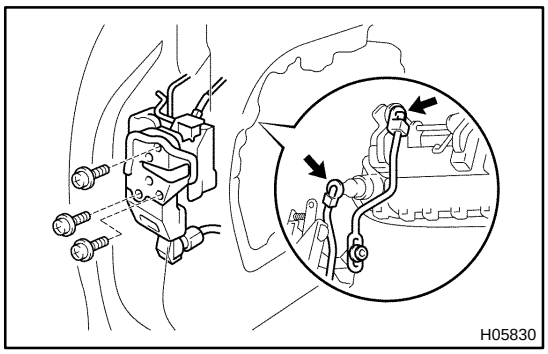

(d) Disconnect the 2 links from the outside handle.
(e) Remove the 3 screws and door lock.

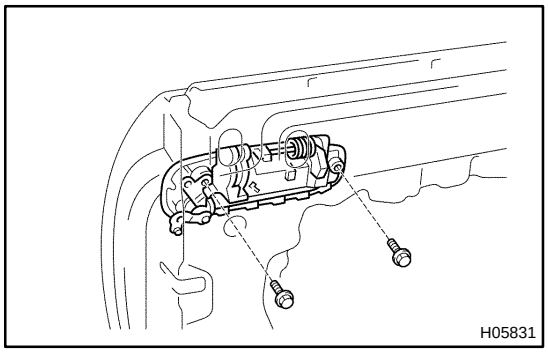

20. REMOVE OUTSIDE HANDLE

Remove the 2 bolts and outside handle.

21. REMOVE DOOR LOCK CYLINDER

Remove the snap ring and door lock cylinder from the outside handle.

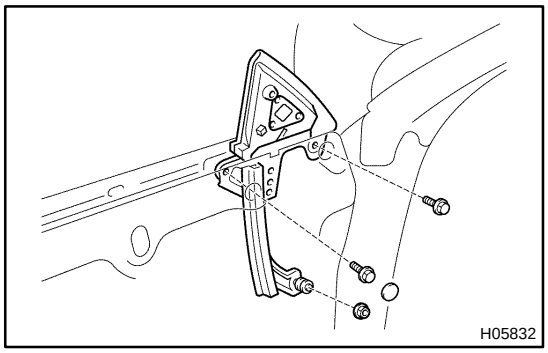

22. REMOVE MIRROR BRACKET

Remove the hole plug cover, then remove the 2 bolts, nut and mirror bracket.

SA12W-01

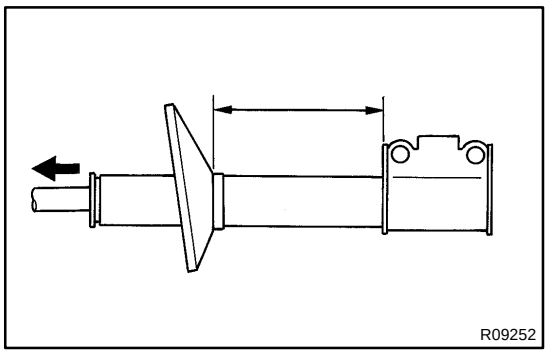

DISPOSAL

1. FULLY EXTEND SHOCK ABSORBER ROD

2. DRILL HOLE TO DISCHARGE GAS FROM CYLINDER

Using a drill, make a hole in the cylinder, as shown to discharge the gas inside.

CAUTION:

The gas discharging is harmless, but be careful of chips which may fly up when drilling.

SA13I-01

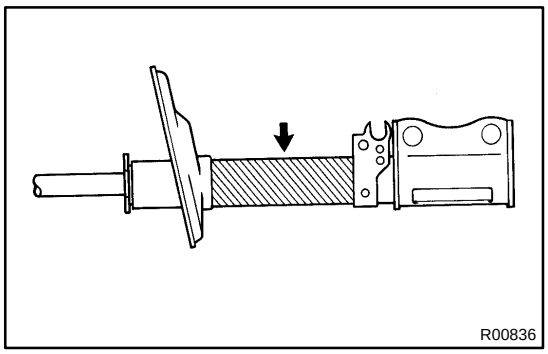
R00836

DISPOSAL

1. FULLY EXTEND SHOCK ABSORBER ROD

2. DRILL HOLE TO DISCHARGE GAS FROM CYLINDER

Using a drill, make a hole in the cylinder, as shown to discharge the gas inside.

CAUTION:

The gas discharging is harmless, but be careful of chips which may fly up when drilling.

RS0PO-02

DISPOSAL

HINT:

When scrapping vehicle equipped with an SRS or disposing of a steering wheel pad (with airbag), always first deploy the airbag in accordance with the procedure described below. If any abnormality occurs with the airbag deployment, contact the SERVICE DEPT. of TOYOTA MOTOR SALES, U.S.A., INC.

When disposing of a steering wheel pad with an airbag deployed in a collision, follow the same procedure given in step 1-(d) in "DISPOSAL".

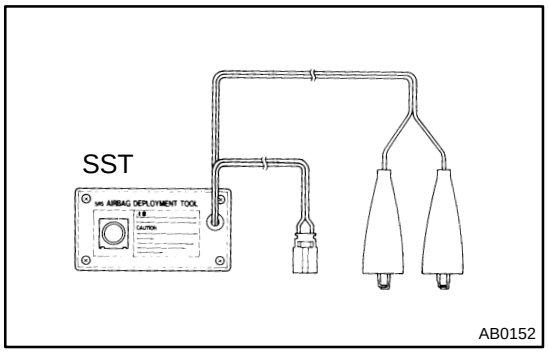

CAUTION:

- **Never dispose of a steering wheel pad which has an undeployed airbag.**
- **The airbag produces a sizeable exploding sound when it deploys, so perform the operation out-of-doors and where it will not create a nuisance to nearby residents.**
- **When deploying the airbag, always use the specified SST (SRS Airbag Deployment Tool). Perform the operation in a place away from electrical noise.**
  SST 09082-00700
- **When deploying an airbag, perform the operation at least 10 m (33 ft) away from the steering wheel pad.**
- **The steering wheel pad is very hot when the airbag is deployed, so leave it alone for at least 30 minutes after deployment.**
- **Use gloves and safety glasses when handling a steering wheel pad with deployed airbag.**
- **Always wash your hands with water after completing the operation.**
- **Do not apply water, etc. to a steering wheel pad with deployed airbag.**

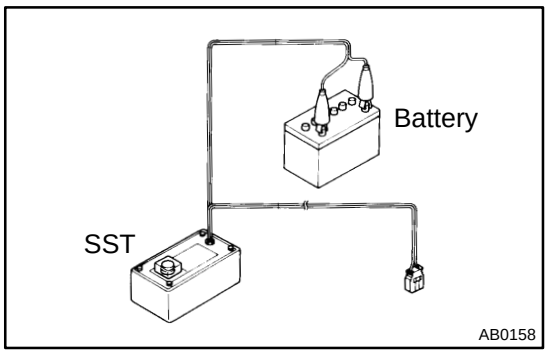

1. AIRBAG DEPLOYMENT WHEN SCRAPPING VEHICLE

HINT:
Have a battery ready as the power source to deploy the airbag.

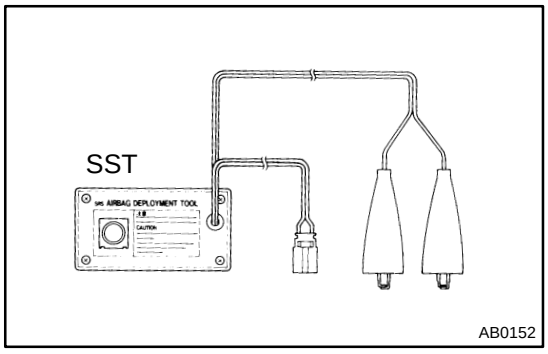

(a) Check functioning of the SST.

CAUTION:
When deploying the airbag, always use the specified SST: SRS Airbag Deployment Tool.

SST 09082-00700

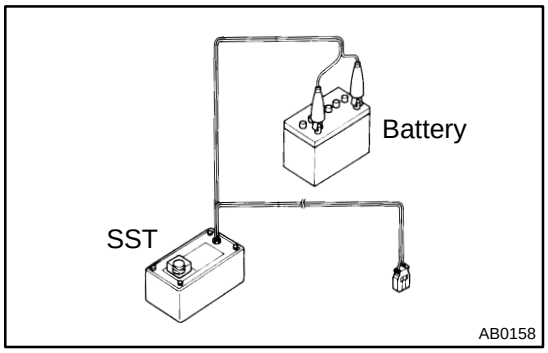

(1) Connect the SST to battery.
Connect the red clip of the SST to the battery positive (+) terminal and the black clip to the battery negative (-) terminal.

HINT:
Do not connect the yellow connector which will be connected with the supplemental restraint system.

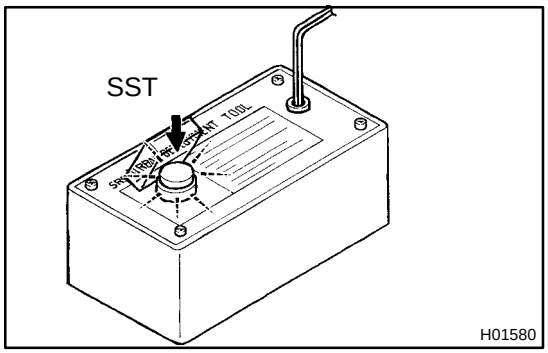

(2) Check functioning of the SST.
Press the SST activation switch, and confirm the LED of the SST activation switch lights up.

CAUTION:
If the LED lights up when the activation switch is not being pressed, SST malfunction is probable, so definitely do not use the SST.

(b) Install the SST.

CAUTION:
Check that there is no looseness in the steering wheel and steering wheel pad.

(1) Disconnect the airbag connector of the spiral cable.
(2) Connect the SST connector to the airbag connector of the spiral cable.

SST 09082-00700

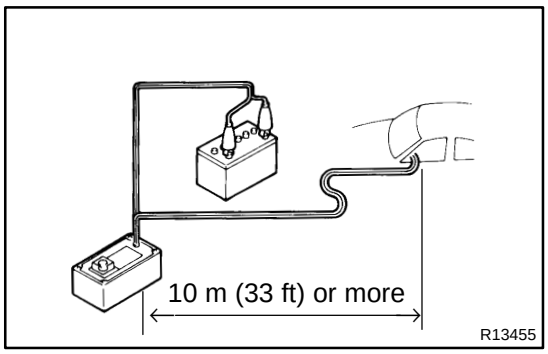

(3) Move the SST to at least 10 m (33 ft) away from the front of the vehicle.
(4) Close all the doors and windows of the vehicle.

NOTICE:

Take care not to damage the SST wire harness.

(5) Connect the SST red clip to the battery positive (+) terminal and the black clip to the negative (-) terminal.

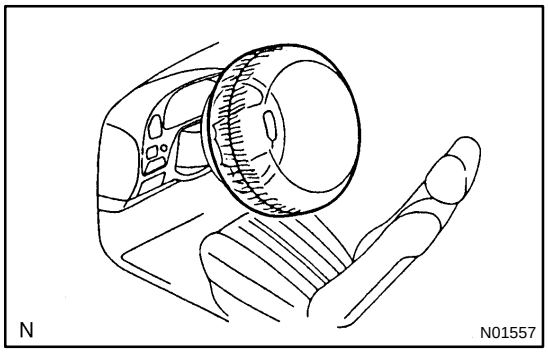

(c) Deploy the airbag.
(1) Check that no one is inside the vehicle or within 10 m (33 ft) area around the vehicle.
(2) Press the SST activation switch and deploy the airbag.

HINT:

The airbag deploys simultaneously as the LED of the SST activation switch lights up.

(d) Dispose of the steering wheel pad (with airbag).

CAUTION:

- **The steering wheel pad is very hot when the airbag is deployed, so leave it alone for at least 30 minutes after deployment.**
- **Use gloves and safety glasses when handling a steering wheel pad with deployed airbag.**
- **Always wash your hands with water after completing the operation.**
- **Do not apply water, etc. to a steering wheel pad with deployed airbag.**

When scrapping a vehicle, deploy the airbag and scrap the vehicle with the steering wheel pad still installed.

2. DEPLOYMENT WHEN DISPOSING OF STEERING WHEEL PAD ONLY

NOTICE:

- **When disposing of the steering wheel pad (with airbag) only, never use the customers vehicle to deploy the airbag.**
- **Be sure to follow the procedure given below when deploying the airbag.**

HINT:

Have a battery ready as the power source to deploy the airbag.

(a) Remove the steering wheel pad (See page SR-12).

CAUTION:

When storing the steering wheel pad, keep the upper surface of the pad facing upward.

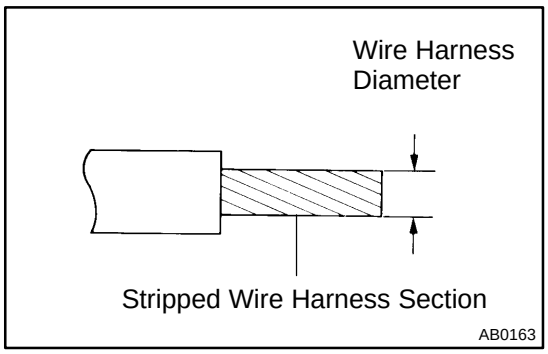

(b) Using a service-purpose wire harness for the vehicle tie down the steering wheel pad to the disc wheel
Wire harness: Stripped wire harness section 1.25 mm^2 or more (0.0019 $in.^2$ or more).

CAUTION:
If a wire harness which is too thin or some other thing is used to tie down the steering wheel pad, it may be snapped by the shock when the airbag is deployed. This is highly dangerous. Always use a wire harness for vehicle use which is at least 1.25 mm^2 (0.0019 $in.^2$).

HINT:
To calculate the square of the stripped wire harness section:
Square = 3.14 X $(Diameter)^2$ divided by 4

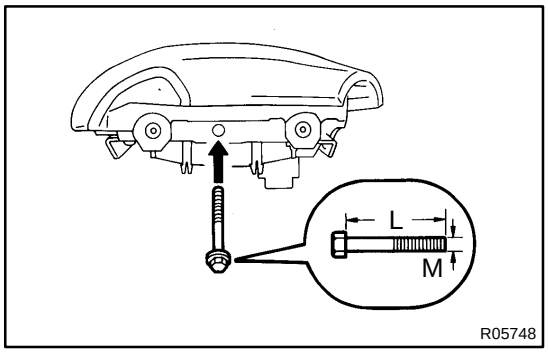

(1) .Install the 2 bolts with washer in the 2 bolt holes in the steering wheel pad.

Bolt:
L: 35.0 mm (1.387 in.)
M: 6.0 mm (0.236 in.)
Pitch: 1.0 mm (0.039 in.)

NOTICE:
- **Tighten the bolts by hand until the bolts become difficult to turn.**
- **Do not tighten the bolts too much.**

(2) Using 3 wire harness, wind the wire harness at least 2 times each around the bolts installed on the left and right sides of the steering wheel pad.

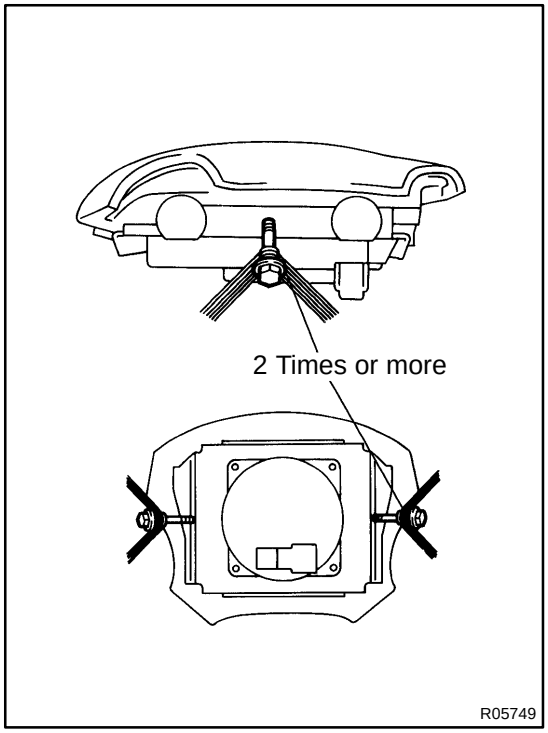

CAUTION:
- **Tightly wind the wire harness around the bolts so that there is no slack.**
- **If there is slackness in the wire harness, the steering wheel pad may come loose due to the shock when the airbag is deployed. This is highly dangerous.**

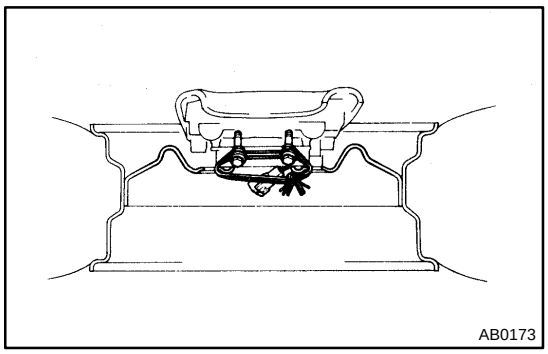
AB0173

(3) Face the upper surface of the steering wheel pad upward. Separately tie the left and right sides of the steering wheel pad to the disc wheel through the hub nut holes. Position the steering wheel pad connector so that it hangs downward through a hub hole in the disc wheel.

CAUTION:

- **Make sure that the wire harness is tight. It is very dangerous if looseness in the wire harness results in the steering wheel pad coming free through the shock of the airbag deploying.**
- **Always tie down the steering wheel pad with the pad side facing upward. It is very dangerous if the steering wheel pad is tied down with the metal surface facing to the airbag deploying direction and the steering wheel pad will be thrown into the air.**

HINT:
The disc wheel will be marked by airbag deployment, so when disposing of the airbag use a redundant disc wheel.

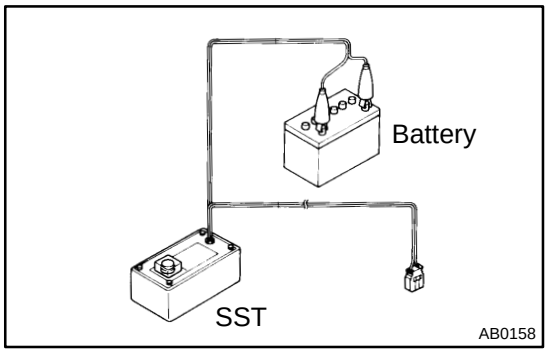

AB0158

(c) Check functioning of the SST.
SST 09082-00700

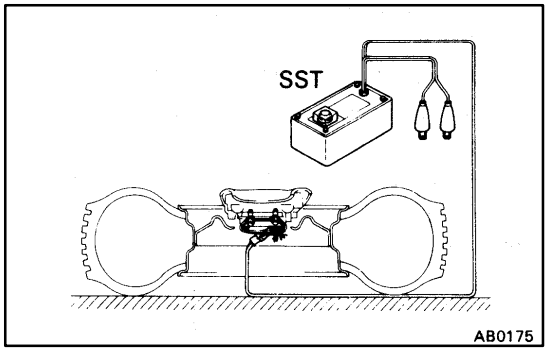

AB0175

(d) Install the SST.

CAUTION:

Place the disc wheel on level ground.

(1) Connect the SST connector to the steering wheel pad connector.
SST 09082-00700

NOTICE:

To avoid damaging the SST connector and wire harness, do not lock the secondary lock of the twin lock. Also, provide some slack for the SST wire harness inside the disc wheel.

(2) Move the SST to at least 10 m (33 ft) away from the steering wheel pad tied down on the disc wheel.

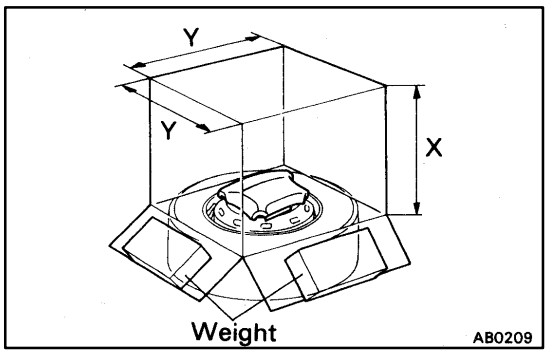

(e) Cover the steering wheel pad with cardboard box or tires.

- Covering method using cardboard box:
  Cover the steering wheel pad with the cardboard box and weight the cardboard box down in 4 places with at least 196 N (20 kg, 44 lb).

Size of cardboard box:
Must exceed the following dimensions:
x= 460 mm (18.11 in.)
When dimension y of the cardboard box exceeds the diameter of the disc wheel with tire to which the steering wheel pad is tied -
x= 460 mm (18.11 in.) + width of tire
y= 650 mm (25.59 in.)

NOTICE:
If a cardboard box smaller than the specified size is used, the cardboard box will be broken by the shock of the airbag deployment.

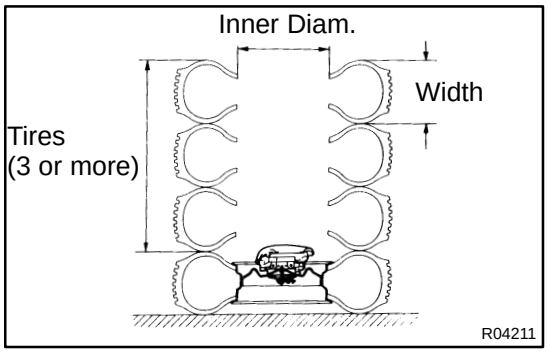

- Covering method using tires:
  Place at least 3 tires without disc wheel on top of the disc wheel with tire to which the steering wheel pad is tied.

Tire size: Must exceed the following dimensions-
Width: 185 mm (7.28 in.)
Inner diameter: 360 mm (14.17 in.)

CAUTION:
Do not use tires with disc wheels.

NOTICE:
The tires may be marked by the airbag deployment, so use redundant tires.

(f) Deploy the airbag.

(1) Connect the SST red clip to the battery positive (+) terminal and the black clip to the battery negative (-) terminal.
(2) Confirm that no one is within 10 m (33 ft) area around the disc wheel to which the steering wheel pad is tied.
(3) Press the SST activation switch and deploy the airbag.

HINT:
The airbag deploys simultaneously as the LED of the SST activation switch lights up.

(g) Dispose of the steering wheel pad (with airbag).

CAUTION:

- **The steering wheel pad is very hot when the airbag is deployed, so leave it alone for at least 30 minutes after deployment.**

- **Use gloves and safety glasses when handling a steering wheel pad with deployed airbag.**
- **Always wash your hands with water after completing the operation.**
- **Do not apply water, etc. to a steering wheel pad with deployed airbag.**
  (1) Remove the steering wheel pad from the disc wheel.
  (2) Place the steering wheel pad in a vinyl bag, tie the end tightly and dispose of it in the same way as other general parts.

EC0GQ-01

DRAWING

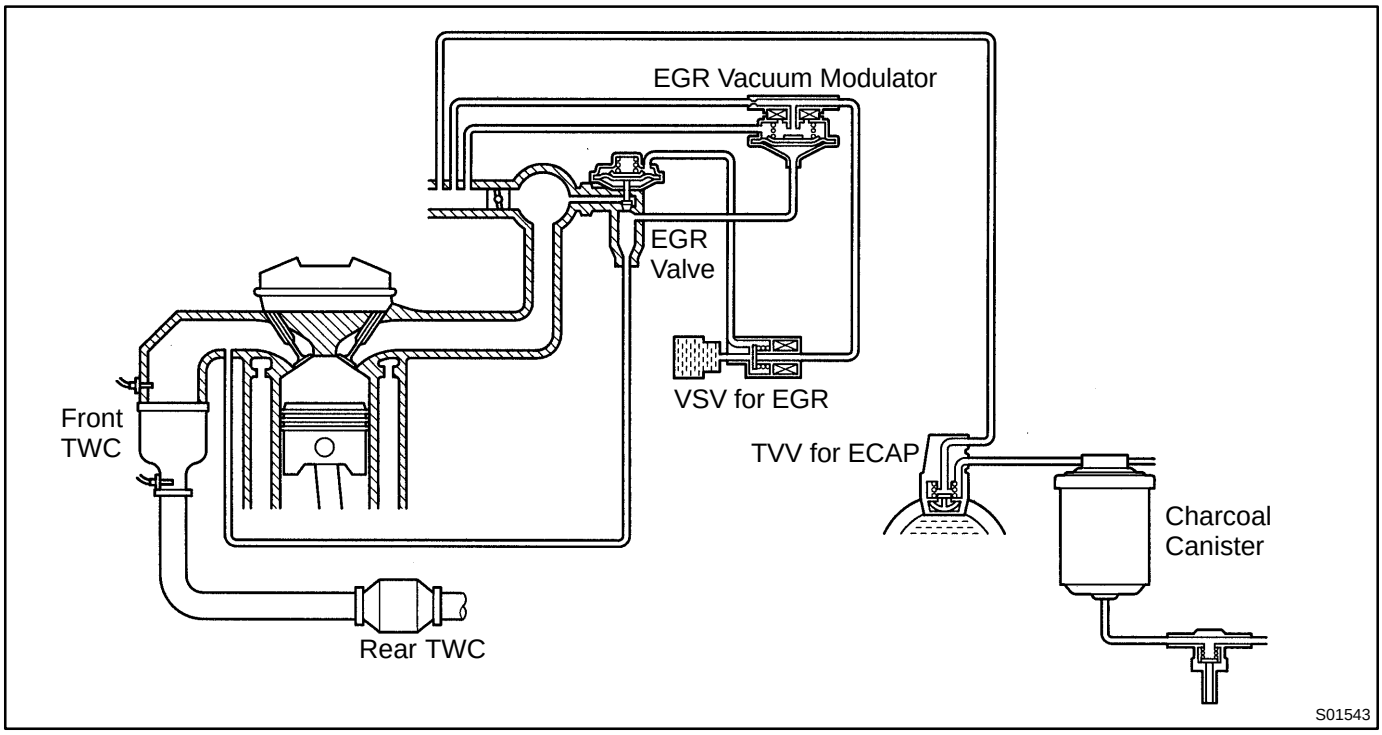

EC0FL-02

DRAWING

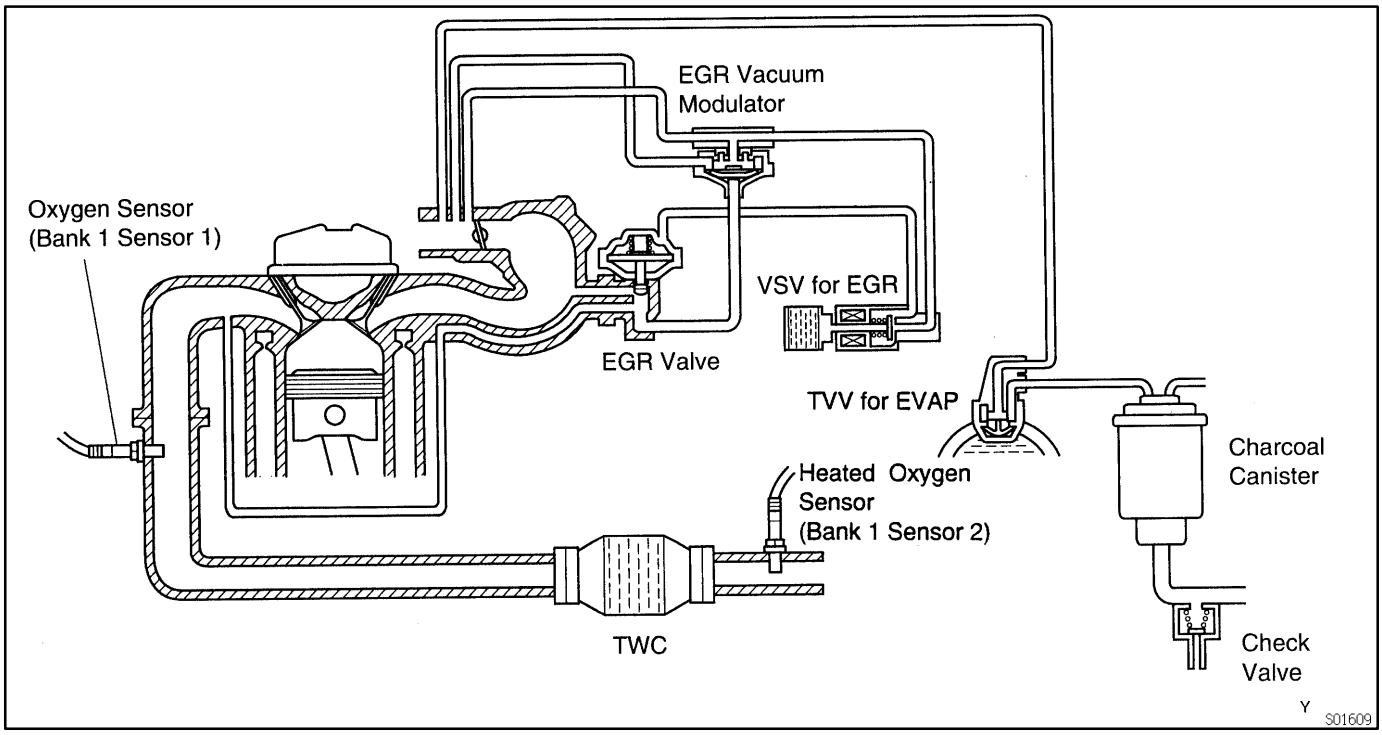

FRONT BRAKE CALIPER

BR0QD-03

COMPONENTS

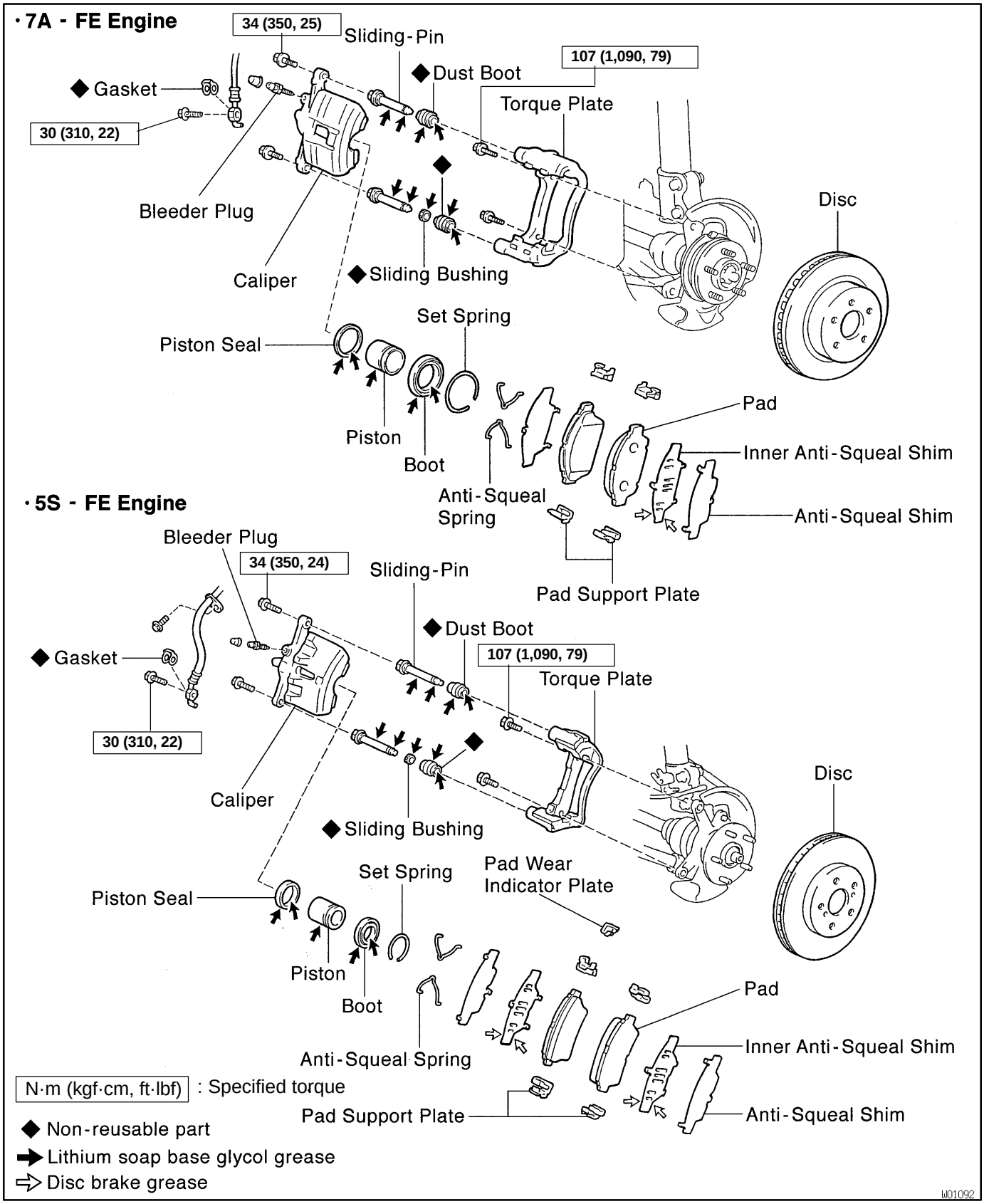

BR0QF-01

DISASSEMBLY

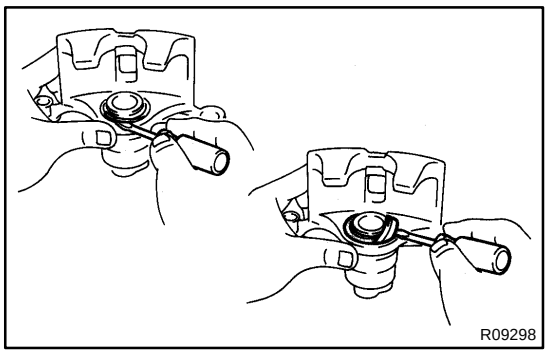
R09298

1. REMOVE SET RING AND CYLINDER BOOT

Using a screwdriver, remove the set ring and cylinder boot from the caliper.

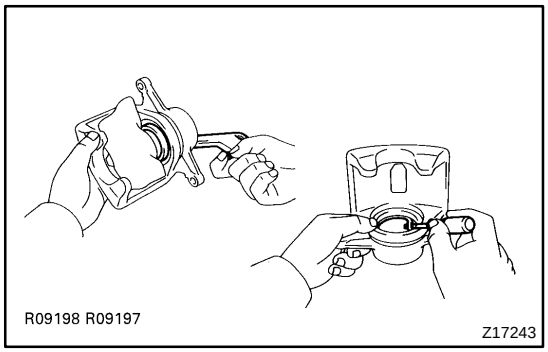
R09198 R09197 Z17243

2. REMOVE PISTON

(a) Place a piece of cloth, or similar, between the piston and the caliper.

(b) Use compressed air to remove the piston from the cylinder.

CAUTION:

Do not place your fingers in front of the piston when using compressed air.

3. REMOVE PISTON SEAL

Using a screwdriver, remove the piston seal from the cylinder.

4. REMOVE SLIDING PINS AND DUST BOOTS

(a) Remove the 2 sliding pins from the torque plate.

NOTICE:

At the time of reassembly, insert the sliding pin with sliding bushing into the bottom side.

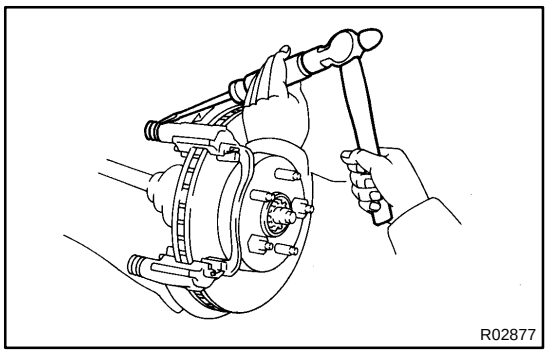
R02877

(b) Using a screwdriver and hammer, tap out the 2 dust boots.

HINT:

At the time of reassembly, use a 19 mm socket wrench and tap in 2 new dust boots into the torque plate.

NOTICE:

At the time of reassembly, check that the metal plate portion of the dust boot fits snugly in the torque plate.

BR0QG-07

INSPECTION

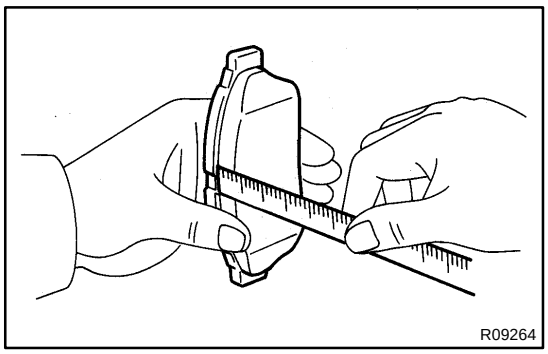

1. MEASURE PAD LINING THICKNESS

Using a ruler, measure the pad lining thickness.

Standard thickness:
7A-FE: 12.0 mm (0.472 in.)
5S-FE: 11.0 mm (0.433 in.)
Minimum thickness: 1.0 mm (0.039 in.)

Replace the pad if the pad's thickness is at the minimum thickness or less, or if the pad has severe, uneven wear.

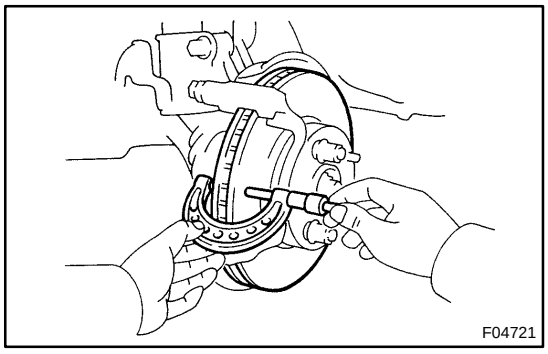

2. MEASURE DISC THICKNESS

Using a micrometer, measure the disc thickness.

Standard thickness:
7A-FE: 25.0 mm (0.984 in.)
5S-FE: 28.0 mm (1.102 in.)
Minimum thickness:
7A-FE: 23.0 mm (0.906 in.)
5S-FE: 26.0 mm (1.024 in.)

Replace the disc if the disc's thickness is at the minimum thickness or less. Replace the disc or grind it on a lathe if it is badly scored or worn unevenly.

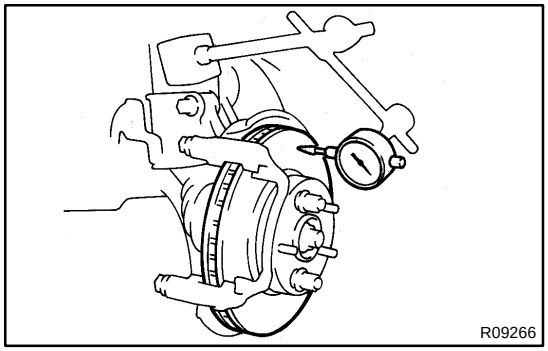

3. MEASURE DISC RUNOUT

Using a dial indicator, measure the disc runout 10 mm (0.39 in.) away from the outer edge of the disc.

Maximum disc runout: 0.05 mm (0.0020 in.)

If the disc's runout is maximum value or greater, check the bearing play in the axial direction and check the axle hub runout (See page SA-10). If the bearing play and axle hub runout are not abnormal, adjust the disc runout or grind it on a "On-car" brake lathe.

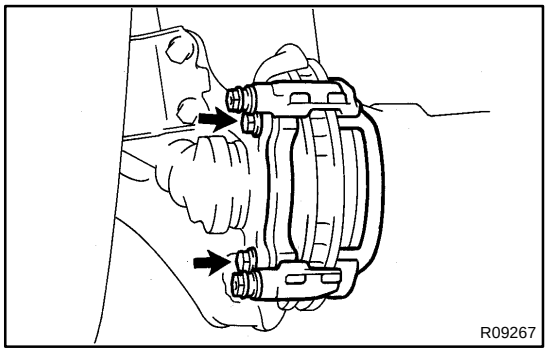

4. IF NECESSARY, ADJUST DISC RUNOUT

(a) Remove the 2 bolts and torque plate from the knuckle.
(b) Remove the hub nuts and the disc. Reinstall the disc in the position turned 1/5 from its original position on the hub. Install and torque the hub nuts.

Torque: 103 N·m (1,050 kgf·cm, 76 ft·lbf)

Remeasure the disc runout. Make a note of the runout and the disc's position on the hub.

(c) Repeat (b) until the disc has been installed on the 3 remaining hub positions.

(d) If the minimum runout recorded in (b) and (c) is less than 0.05 mm (0.0020 in.), install the disc in that position.

(e) If the minimum runout recorded in (b) and (c) is greater than 0.05 mm (0.0020 in.), replace the disc and repeat step 3.

(f) Install the torque plate and torque the mounting bolts.
Torque: 107 N·m (1,090 kgf·cm, 79 ft·lbf)

BR0QI-01

INSTALLATION

Installation is in the reverse order of removal (See page BR-22).

1. **AFTER INSTALLATION, FILL BRAKE RESERVOIR WITH BRAKE FLUID AND BLEED BRAKE SYSTEM (See page BR-4)**
2. **CHECK FOR LEAKS**

BR0QH-01

REASSEMBLY

Reassembly is in the reverse order of disassembly (See page BR-23).

NOTICE:

Apply lithium soap base glycol grease to the parts indicated by arrows (See page BR-21).

BR0QE-06

REMOVAL

1. REMOVE FRONT WHEEL

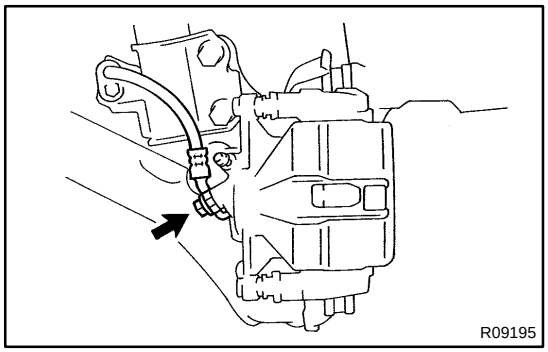

2. DISCONNECT FLEXIBLE HOSE

(a) Remove the union bolt and gasket from the caliper, then disconnect the flexible hose from the caliper.
Torque: 30 N·m (310 kgf·cm, 22 ft·lbf)

HINT:
At the time of installation, install the flexible hose lock securely in the lock hole in the caliper.

(b) Use a container to catch the brake fluid as it drains out.

3. REMOVE CALIPER

(a) Hold the sliding pin and loosen the 2 installation bolts.
Torque: 34 N·m (350 kgf·cm, 25 ft·lbf)

(b) Remove the 2 installation bolts.

(c) Remove the caliper from the torque plate.

4. REMOVE 2 ANTI-SQUEAL SPRINGS

5. REMOVE 2 PADS WITH ANTI-SQUEAL SHIMS

6. REMOVE 4 PAD SUPPORT PLATES

FRONT BRAKE PAD

BR1NT-01

COMPONENTS

7A-FE Engine:

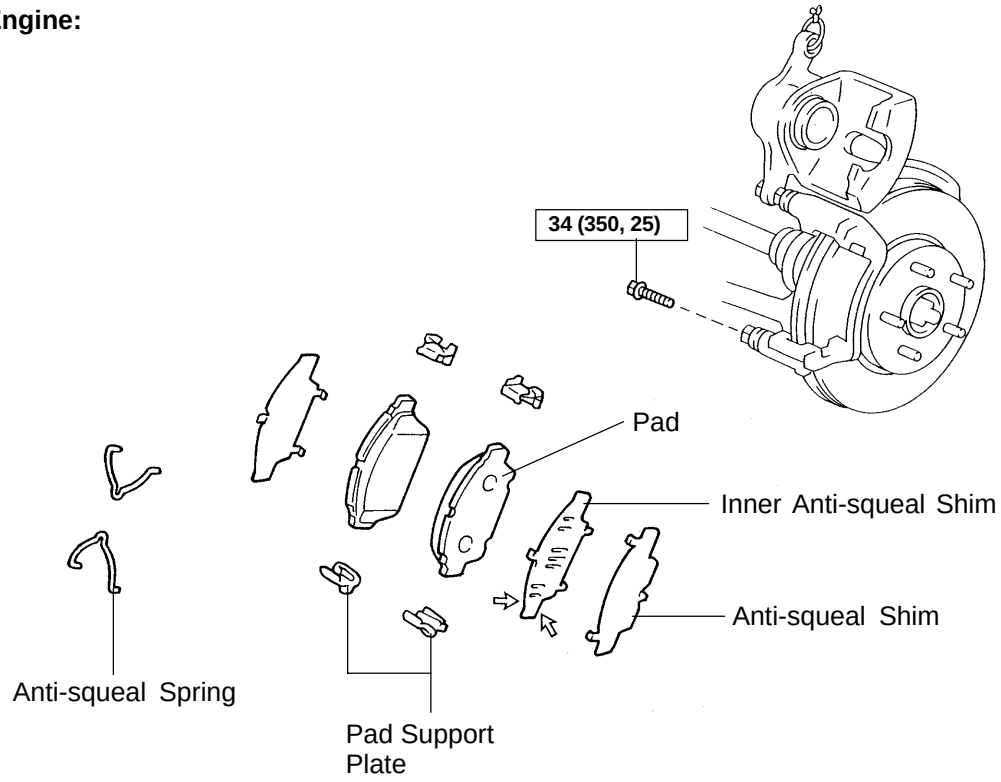

5S-FE Engine:

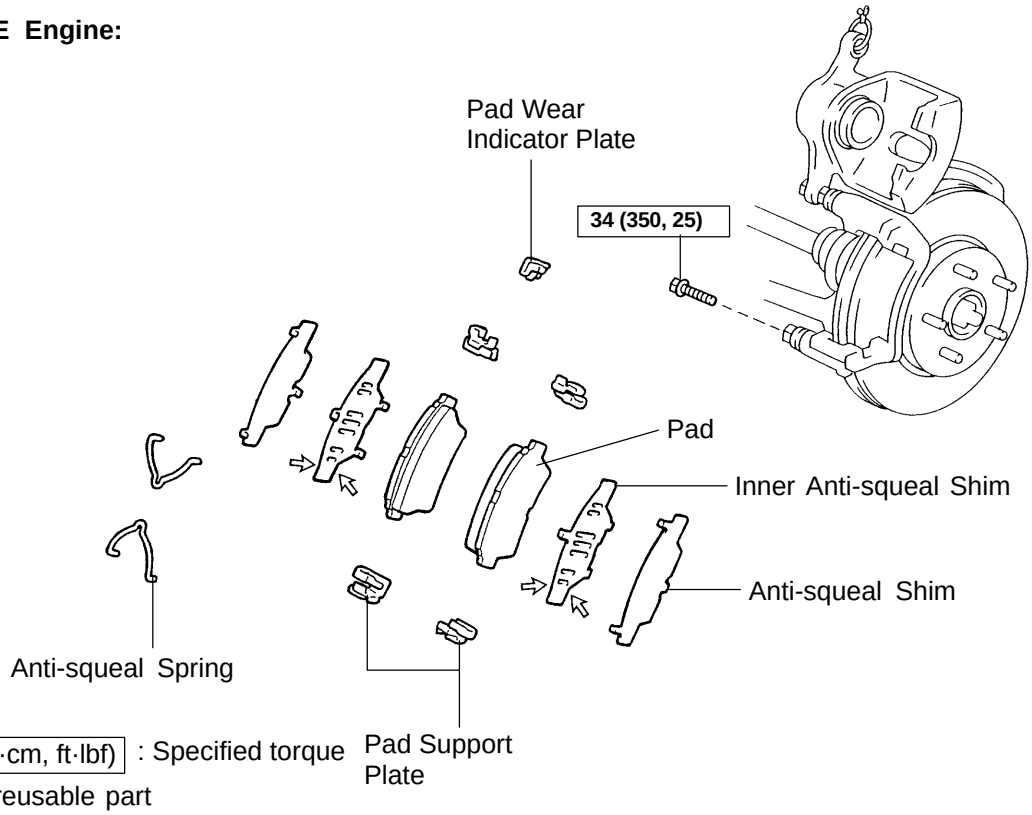

N·m (kgf·cm, ft·lbf) : Specified torque

◆ Non-reusable part

N ⇦ Disc brake grease

F10563

BR0QC-02

REPLACEMENT

1. REMOVE FRONT WHEEL

Remove the wheel and temporarily fasten the disc with hub nuts.

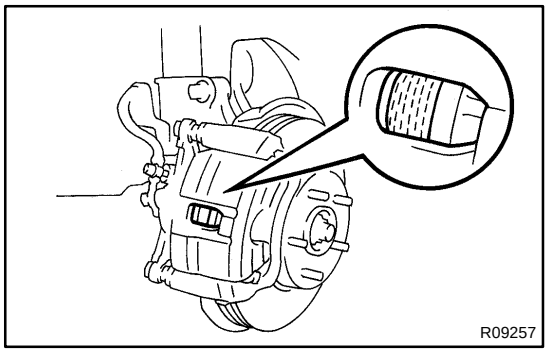

2. INSPECT PAD LINING THICKNESS

Check the pad thickness through the caliper inspection hole and replace the pads if they are not within the specification.

Minimum thickness: 1.0 mm (0.039 in.)

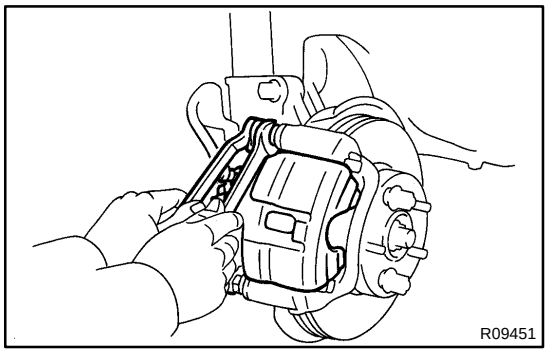

3. LIFT UP CALIPER

(a) Hold the sliding pin and loosen the 2 installation bolts.

(b) Remove the caliper and suspend it securely and so the hose is not stretched.

HINT:

Do not disconnect the flexible hose from the brake caliper.

4. REMOVE 2 ANTI-SQUEAL SPRINGS

5. 7A-FE:

REMOVE 2 PADS WITH 3 ANTI-SQUEAL SHIMS

6. 5S-FE:

REMOVE 2 PADS WITH 4 ANTI-SQUEAL SHIMS AND PAD WEAR INDICATOR PLATE

7. REMOVE 4 PAD SUPPORT PLATE

NOTICE:

The anti-squeal springs and support plates can be used again provided that they have sufficient rebound, no deformation, cracks or wear, and have had all rust, dirt and foreign particles cleaned off.

8. CHECK DISC THICKNESS AND RUNOUT

(See page BR-24)

9. INSTALL PAD SUPPORT PLATES

Install the 4 pad support plates.

10. INSTALL NEW PADS

NOTICE:

When replacing worn pads, the anti-squeal shims and wear indicator plates (5S-FE) must be replaced together with the pads.

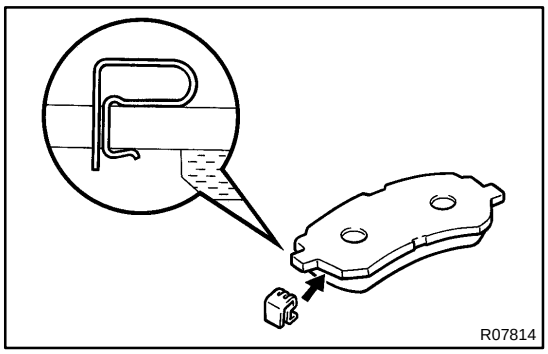

(a) 5S-FE:
Install a pad wear indicator plate on the inner pad.
(b) Apply disc brake grease to inner anti-squeal shim(s) (See page BR-18).
(c) 7A-FE:
Install the anti-squeal shims on outside pad.
(d) 5S-FE:
Install the 2 anti-squeal shims on each pad.
(e) 5S-FE:
Install inner pad with the pad wear indicator plate facing upward, and install the outer pad.

NOTICE:

There should be no oil or grease adhering to the friction surfaces of the pads or the disc.

(f) Install the 2 anti-squeal springs.

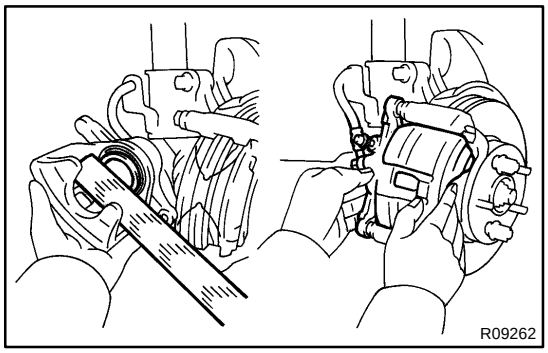

11. INSTALL CALIPER

(a) Draw out a small amount of brake fluid from the reservoir.
(b) Press in the piston with a hammer handle or similar implement.

HINT:

If the piston is difficult to push in, loosen the bleeder plug and push in the piston while letting some brake fluid escape.

(c) Install the caliper.
(d) Hold the sliding pin and torque the installation bolts.
Torque: 34 N·m (350 kgf·cm, 25 ft·lbf)

12. INSTALL FRONT WHEEL

13. CHECK THAT FLUID LEVEL IS AT MAX LINE

FRONT SPEED SENSOR

COMPONENTS

BR0R0-06

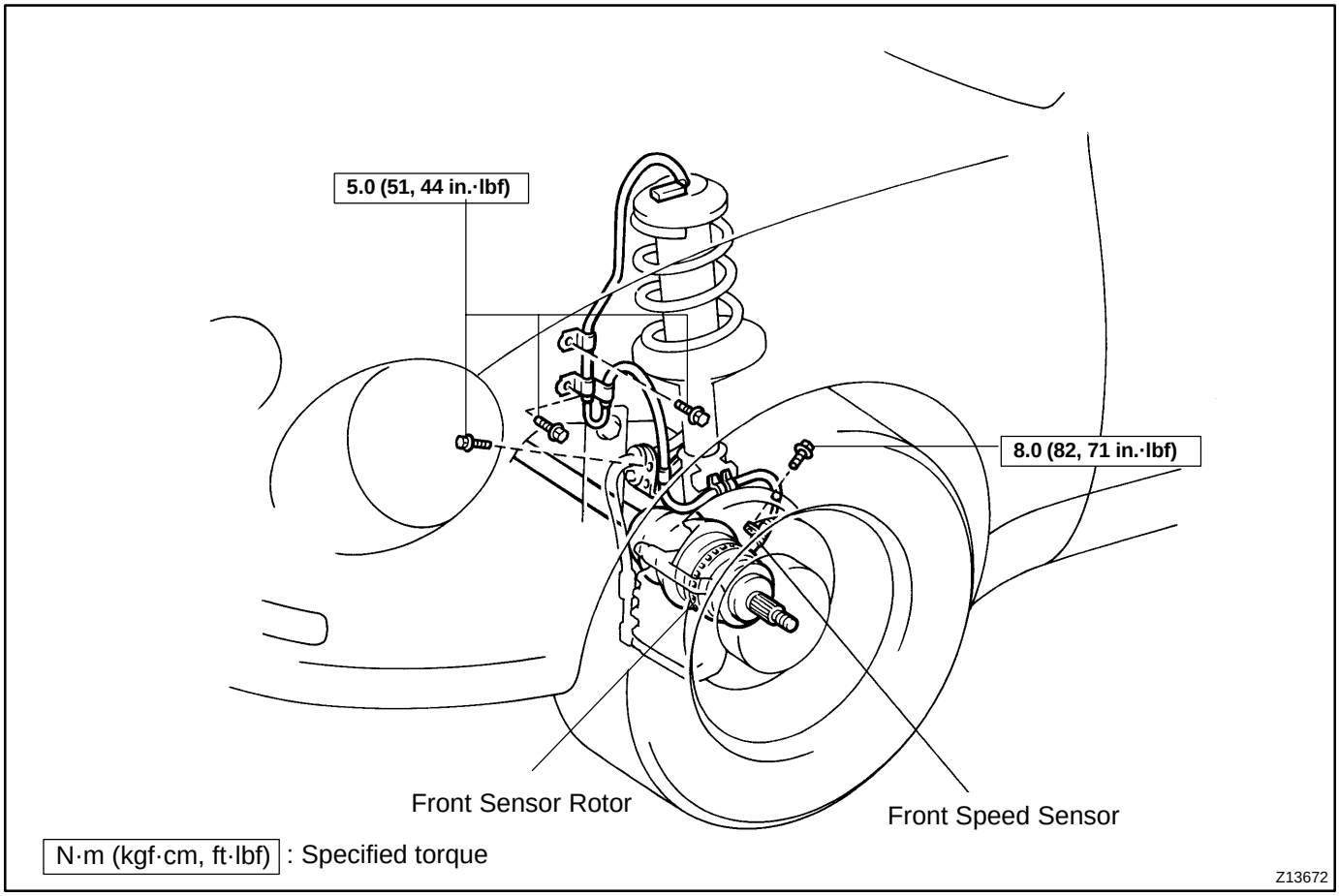

BR0R2-01

INSTALLATION

Installation is in the reverse order of removal (See page BR-56).
AFTER INSTALLATION, CHECK SPEED SENSOR SIGNAL (See page DI-308)

BR0R1-01

REMOVAL

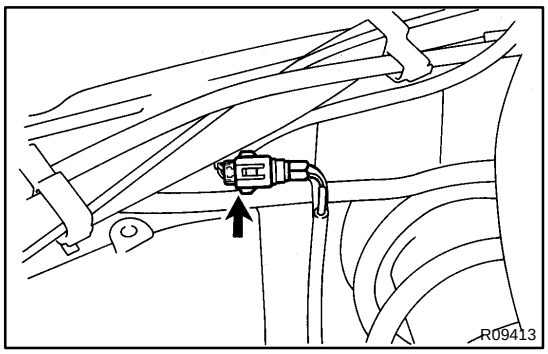

1. DISCONNECT SPEED SENSOR CONNECTOR

(a) Remove the fender liner.

(b) Disconnect the speed sensor connector.

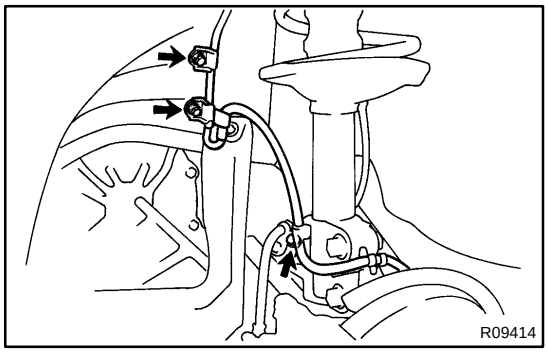

2. REMOVE SPEED SENSOR

(a) Remove the 3 clamp bolts holding the sensor harness from the body and shock absorber.

Torque: 5.0 N·m (51 kgf·cm, 44 in.·lbf)

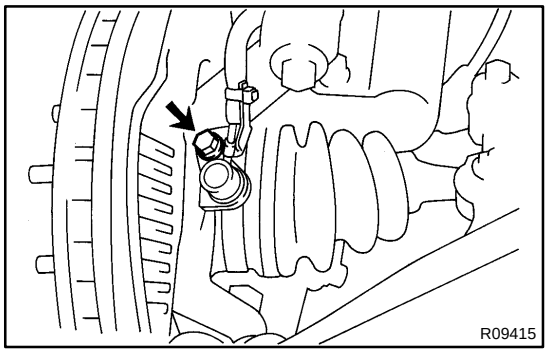

(b) Remove the speed sensor installation bolt from the steering knuckle.

Torque: 8.0 N·m (82 kgf·cm, 71 in.·lbf)

(c) Remove the clamp and speed sensor.

NOTICE:

At the time of installation, please refer to the following item.

- **There are no foreign objects on the sensor or the part of the knuckle to which the sensor is to be installed.**
- **The sensor is installed flat against the knuckle when you tighten the bolt.**

HOW TO TROUBLESHOOT ECU CONTROLLED SYSTEMS

IN072-03

GENERAL INFORMATION

A large number of ECU controlled systems are used in the CELICA. In general, the ECU controlled system is considered to be a very intricate system requiring a high level of technical knowledge and expert skill to troubleshoot. However, the fact is that if you proceed to inspect the circuits one by one, troubleshooting of these systems is not complex. If you have adequate understanding of the system and a basic knowledge of electricity, accurate diagnosis and necessary repair can be performed to locate and fix the problem. This manual is designed through emphasis of the above standpoint to help service technicians perform accurate and effective troubleshooting, and is compiled for the following major ECU controlled systems:

System	Page
1. Engine (7A-FE)	DI-1
2. Engine (5S-FE)	DI-108
3. Automatic Transaxle (A140E)	DI-217
4. Automatic Transaxle (A246E)	DI-260
5. Anti-Lock Brake System	DI-306
6. Supplemental Restraint System	DI-344
7. Cruise Control System	DI-411

The troubleshooting procedure and how to make use of it are described on the above pages.

IDENTIFICATION INFORMATION

IN0GN-02

VEHICLE IDENTIFICATION AND ENGINE SERIAL NUMBER

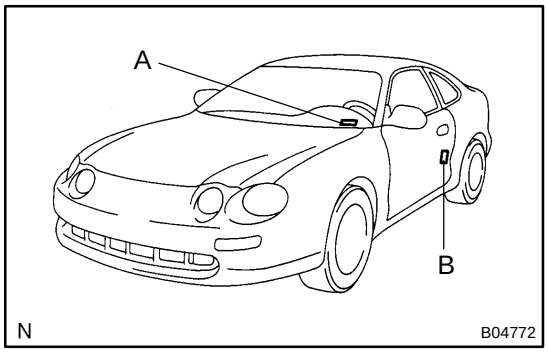

1. VEHICLE IDENTIFICATION NUMBER

The vehicle identification number is stamped on the vehicle identification number plate and certification label.

A: Vehicle Identification Number Plate

B: Certification Label

5S-FE Engine :

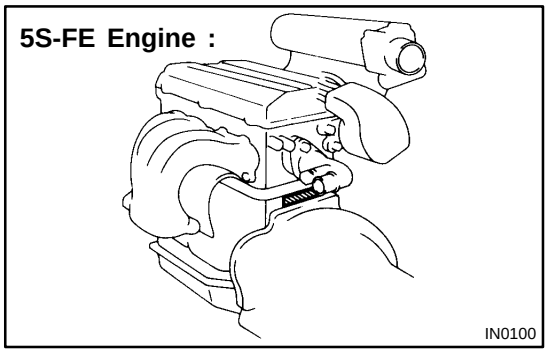

2. ENGINE SERIAL NUMBER

The engine serial number is stamped on the engine block, as shown in the illustration.

7A-FE Engine :

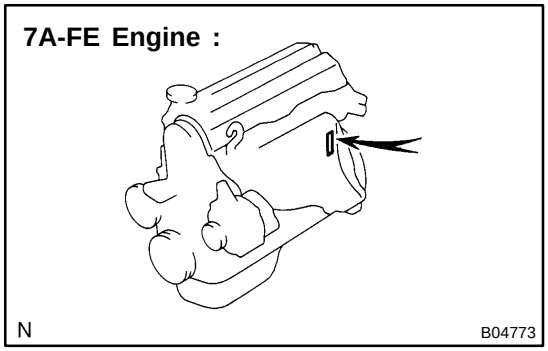

HOW TO USE THIS MANUAL

IN04V-06

GENERAL INFORMATION

1. INDEX

An INDEX is provided on the first page of each section to guide you to the item to be repaired. To assist you in finding your way through the manual, the Section Title and major heading are given at the top of every page.

2. PRECAUTION

At the beginning of each section, a PRECAUTION recaution is given that pertains to all repair operations contained in that section.

Read these precautions before starting any repair task.

3. TROUBLESHOOTING

TROUBLESHOOTING tables are included for each system to help you diagnose the problem and find the cause. The fundamentals of how to proceed with troubleshooting are described on page IN-18 .

Be sure to read this before performing troubleshooting.

4. PREPARATION

Preparation lists the SST (Special Service Tools), recommended tools, equipment, lubricant and SSM (Special Service Materials) which should be prepared before beginning the operation and explains the purpose of each one.

5. REPAIR PROCEDURES

Most repair operations begin with an overview illustration. It identifies the components and shows how the parts fit together.

Example:

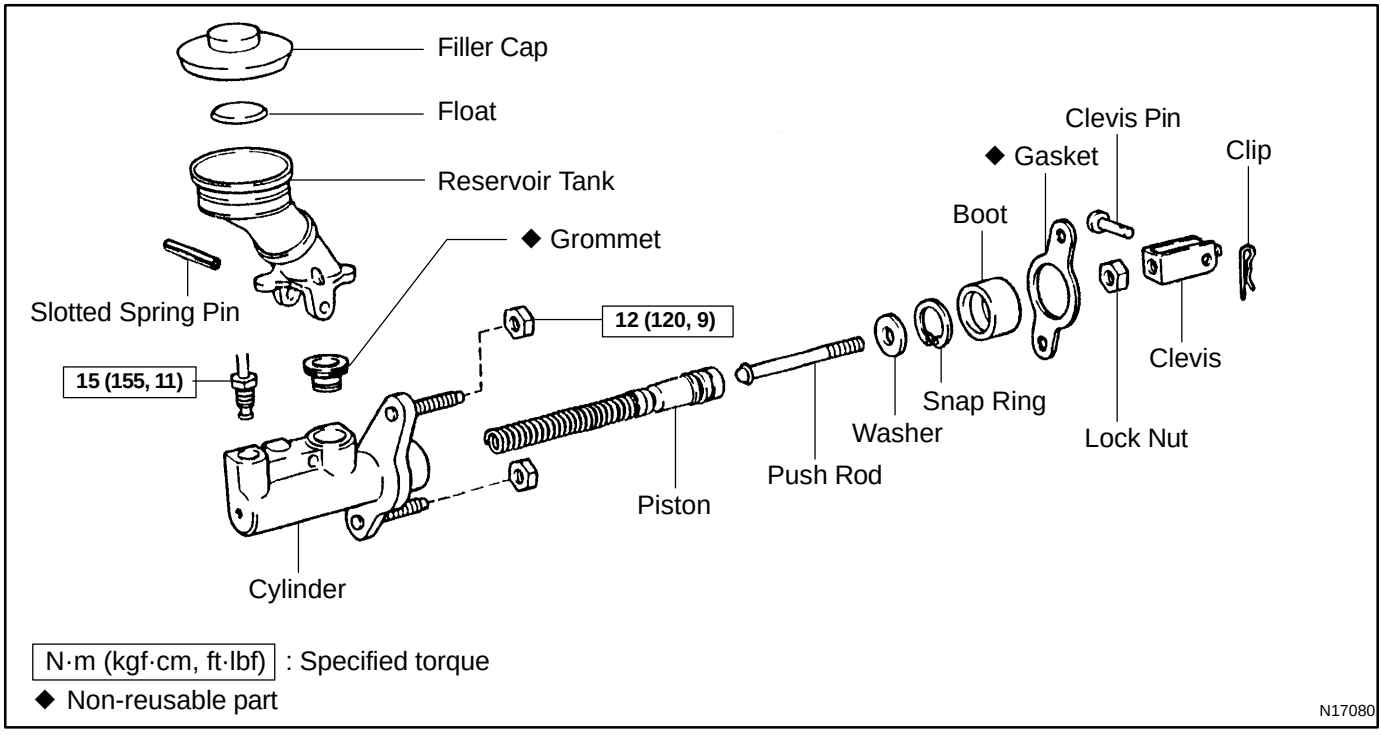

The procedures are presented in a step-by-step format:

- The illustration shows what to do and where to do it.
- The task heading tells what to do.
- The detailed text tells how to perform the task and gives other information such as specifications and warnings.

Example:

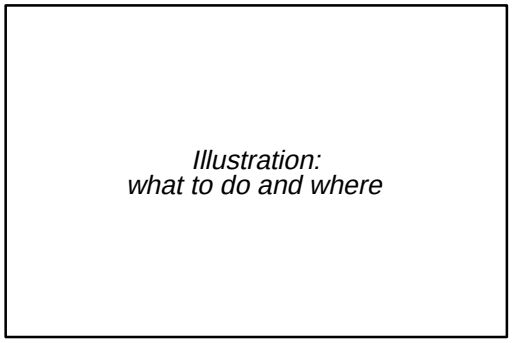

Task heading : what to do

21. CHECK PISTON STROKE OF OVERDRIVE BRAKE

(a) Place SST and a dial indicator onto the overdrive brake piston as shown in the illustration.

SST 09350-30020 (09350-06120)

Set part No. *Component part No.*

Detailed text : how to do task

(b) Measure the stroke applying and releasing the compressed air (392 — 785 kPa, 4 — 8 kgf/cm^2 or 57 — 114 psi) as shown in the illustration.

Piston stroke: 1.40 — 1.70 mm (0.0551 — 0.0669 in.)

Specification

This format provides the experienced technician with a FAST TRACK to the information needed. The upper case task heading can be read at a glance when necessary, and the text below it provides detailed information. Important specifications and warnings always stand out in bold type.

6. REFERENCES

References have been kept to a minimum. However, when they are required you are given the page to refer to.

7. SPECIFICATIONS

Specifications are presented in bold type throughout the text where needed. You never have to leave the procedure to look up your specifications. They are also found in Service Specifications section for quick reference.

8. CAUTIONS, NOTICES, HINTS:

- CAUTIONS are presented in bold type, and indicate there is a possibility of injury to you or other people.
- NOTICES are also presented in bold type, and indicate the possibility of damage to the components being repaired.
- HINTS are separated from the text but do not appear in bold. They provide additional information to help you perform the repair efficiently.

9. SI UNIT

The UNITS given in this manual are primarily expressed according to the SI UNIT (International System of Unit), and alternately expressed in the metric system and in the English System.

Example:

Torque: 30 N·m (310 kgf·cm, 22 ft·lbf)

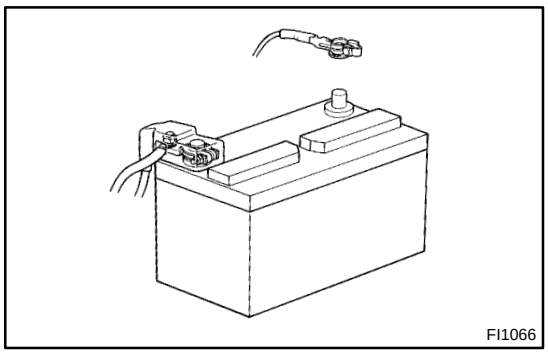
FI1066

REPAIR INSTRUCTIONS

IN06Z-02

GENERAL INFORMATION

BASIC REPAIR HINT

(a) Use fender, seat and floor covers to keep the vehicle clean and prevent damage.

(b) During disassembly, keep parts in the appropriate order to facilitate reassembly.

(c) Observe the following operations:

(1) Before performing electrical work, disconnect the negative (-) terminal cable from the battery.

(2) If it is necessary to disconnect the battery for inspection or repair, always disconnect the negative (-) terminal cable which is grounded to the vehicle body.

(3) To prevent damage to the battery terminal, loosen the cable nut and raise the cable straight up without twisting or prying it.

(4) Clean the battery terminals and cable ends with a clean shop rag. Do not scrape them with a file or other abrasive objects.

(5) Install the cable ends to the battery terminals with the nut loose, and tighten the nut after installation. Do not use a hammer to tap the cable ends onto the terminals.

(6) Be sure the cover for the positive (+) terminal is properly in place.

(d) Check hose and wiring connectors to make sure that they are secure and correct.

(e) Non-reusable parts

(1) Always replace cotter pins, gaskets, O-rings and oil seals, etc. with new ones.

(2) Non-reusable parts are indicated in the component illustrations by the "◆" symbol.

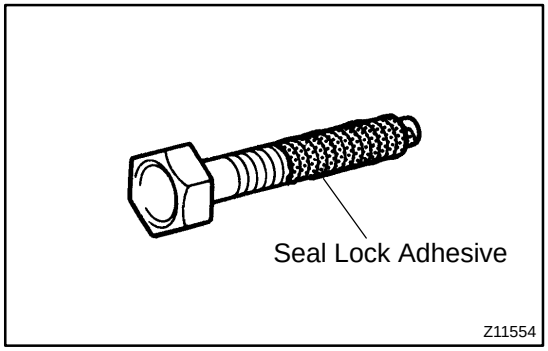

Z11554

(f) Precoated parts

Precoated parts are bolts and nuts, etc. that are coated with a seal lock adhesive at the factory.

(1) If a precoated part is retightened, loosened or caused to move in any way, it must be recoated with the specified adhesive.

(2) When reusing precoated parts, clean off the old adhesive and dry with compressed air. Then apply the specified seal lock adhesive to the bolt, nut or threads.

(3) Precoated parts are indicated in the component illustrations by the "★" symbol.

(g) When necessary, use a sealer on gaskets to prevent leaks.

(h) Carefully observe all specifications for bolt tightening torques. Always use a torque wrench.

(i) Use of special service tools (SST) and special service materials (SSM) may be required, depending on the nature of the repair. Be sure to use SST and SSM where specified and follow the proper work procedure. A list of SST and SSM can be found in Preparation section in this manual.

Medium Current Fuse and High Current Fuse
Equal Amperage Rating

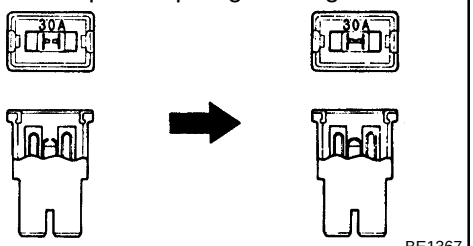

BE1367

(j) When replacing fuses, be sure the new fuse has the correct amperage rating. DO NOT exceed the rating or use one with a lower rating.

Illustration	Symbol	Part Name	Abbreviation
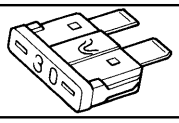 BE5594	 IN0365	FUSE	FUSE
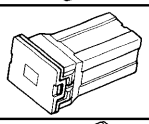 BE5595	 IN0366	MEDIUM CURRENT FUSE	M-FUSE
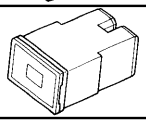 BE5596	 IN0367	HIGH CURRENT FUSE	H-FUSE
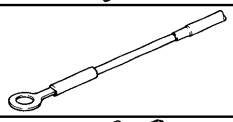 BE5597	 IN0367	FUSIBLE LINK	FL
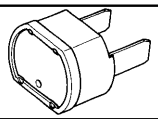 BE5598	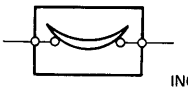 IN0368	CIRCUIT BREAKER	CB

V00076

(k) Care must be taken when jacking up and supporting the vehicle. Be sure to lift and support the vehicle at the proper locations (See page IN-8).
  (1) If the vehicle is to be jacked up only at the front or rear end, be sure to block the wheels at the opposite end in order to ensure safety.
  (2) After the vehicle is jacked up, be sure to support it on stands. It is extremely dangerous to do any work on a vehicle raised on a jack alone, even for a small job that can be finished quickly.

(l) Observe the following precautions to avoid damage to the following parts:
  (1) Do not open the cover or case of the ECU unless absolutely necessary. (If the IC terminals are touched, the IC may be destroyed by static electricity.)

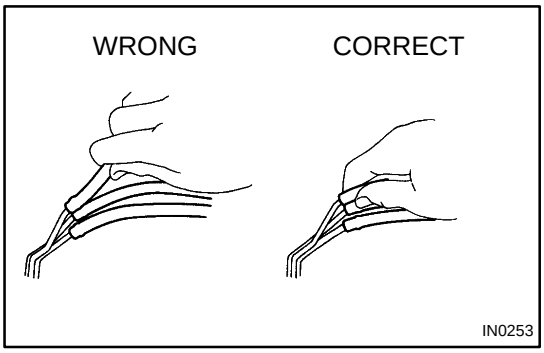

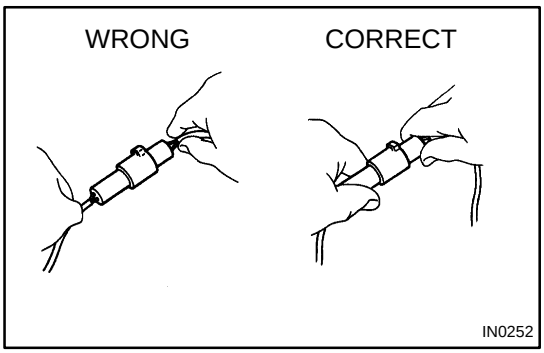

  (2) To disconnect vacuum hoses, pull off the end, not the middle of the hose.
  (3) To pull apart electrical connectors, pull on the connector itself, not the wires.
  (4) Be careful not to drop electrical components, such as sensors or relays. If they are dropped on a hard floor, they should be replaced and not reused.
  (5) When steam cleaning an engine, protect the electronic components, air filter and emission-related components from water.
  (6) Never use an impact wrench to remove or install temperature switches or temperature sensors.
  (7) When checking continuity at the wire connector, insert the tester probe carefully to prevent terminals from bending.
  (8) When using a vacuum gauge, never force the hose onto a connector that is too large. Use a step-down adapter for adjustment. Once the hose has been stretched, it may leak.

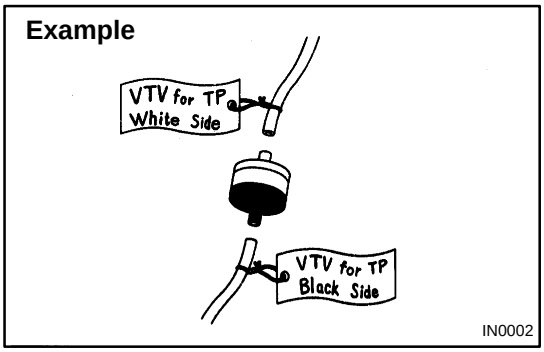

(m) Tag hoses before disconnecting them:
  (1) When disconnecting vacuum hoses, use tags to identify how they should be reconnected to.
  (2) After completing a job, double check that the vacuum hoses are properly connected. A label under the hood shows the proper layout.

(n) Unless otherwise stated, all resistance is measured at an ambient temperature of 20˚C (68˚F). Because the resistance may be outside specifications if measured at high temperatures immediately after the vehicle has been running, measurement should be made when the engine has cooled down.

INSIDE VEHICLE

MA002-34

GENERAL MAINTENANCE

These are some maintenance and inspection items which are considered to be the owner's responsibility. They can be done by the owner or they can have them done at a service shop.
These items include those which should be checked on a daily basis, those which, in most cases, do not require (special) tools and those which are considered to be reasonable for the owner to do.
Items and procedures for general maintenance are as follows.

1. GENERAL NOTES

- Maintenance items may vary from country to country. Check the manual or guide in which the maintenance schedule is shown.
- Every service item in the periodic maintenance schedule must be performed.
- Periodic maintenance service must be performed according to whichever interval in the periodic maintenance schedule occurs first, the odometer reading (miles) or the time interval (months).
- Maintenance service after the last period should be performed at the same interval as before unless otherwise noted.
- Failure to do even one item an cause the engine to run poorly and increase exhaust emissions.

2. LIGHTS

(a) Check that the headlights, stop lights, taillights, turn signal lights, and other lights are all working.
(b) Check the headlight aim.

3. WARNING LIGHTS AND BUZZERS

Check that all warning lights and buzzers function properly.

4. HORN

Check that it is working.

5. WINDSHIELD GLASS

Check for scratches, pits or abrasions.

6. WINDSHIELD WIPER AND WASHER

(a) Check operation of the wipers and washer.
(b) Check that the wipers do not streak.

7. WINDSHIELD DEFROSTER

(a) Check that air comes out from the defroster outlet when operating the heater or air conditioner at defroster mode.
(b) Check that the A/C indicator light lights up when the A/C switch is ON.

8. REAR VIEW MIRROR

Check that it is mounted securely.

9. SUN VISORS

Check that they move freely and are mounted securely.

10. STEERING WHEEL

Check that it has the specified freeplay. Be alert for changes in steering condition, such as hard steering effort, excessive freeplay or strange noises.

11. SEATS

(a) Check that all front seat controls such as seat adjusters, seatback recliner, etc. operate smoothly.
(b) Check that all latches lock securely in any position.
(c) Check that the head restraints move up and down smoothly and that the locks hold securely in any latch position.
(d) For fold-down seat backs, check that the latches lock securely.

12. SEAT BELTS

(a) Check that the seat belt system such as the buckles, retractors and anchors operate properly and smoothly.

(b) Check that the belt webbing is not cut, frayed, worn or damaged.

13. ACCELERATOR PEDAL

Check the pedal for smooth operation and uneven pedal effort or catching.

14. CLUTCH PEDAL (See page CL-2)

(a) Check the pedal for smooth operation.

(b) Check that the pedal has the proper freeplay.

15. BRAKE PEDAL (See page BR-6)

(a) Check the pedal for smooth operation.

(b) Check that the pedal has the proper reserve distance and freeplay.

(c) Check the brake booster function.

16. BRAKES

At a safe place, check that the brakes do not pull to one side when applied.

17. PARKING BRAKE (See page BR-7)

(a) Check that the lever has the proper travel.

(b) On a safe incline, check that the vehicle is held securely with only the parking brake applied.

18. AUTOMATIC TRANSMISSION ”PARK” MECHANISM

(a) Check the lock release button of the selector lever for proper and smooth operation.

(b) On a safe incline, check that the vehicle is held securely with the selector lever in ”P” position and all brakes released.

UNDER HOOD

MA003-32

GENERAL MAINTENANCE

1. GENERAL NOTES

- Maintenance items may vary from country to country. Check the manual or guide in which the maintenance schedule is shown.
- Every serice item in the periodic maintenance schedule must be performed.
- Periodic maintenance service must be performed according to whichever interval in the periodic maintenance schedule occurs first, the odometer reading (miles) or the time interval (months).
- Maintenance service after the last period should be performed at the same interval as before unless otherwise noted.
- Failure to do even one item an cause the engine to run poorly and increase exhaust emissions.

2. WINDSHIELD WASHER FLUID

Check that there is sufficient fluid in the tank.

3. ENGINE COOLANT LEVEL

Check that the coolant level is between the ”FULL” and ”LOW” lines on the see-through reservoir.

4. RADIATOR AND HOSES

(a) Check that the front of the radiator is clean and not blocked with leaves, dirt or bugs.
(b) Check the hoses for cracks, kinks, rot or loose connections.

5. BATTERY ELECTROLYTE LEVEL

Check that the electrolyte level of all battery cells is between the upper and lower level lines on the case.
Maintenance-Free Battery:
If under the lower level, replace the battery (or add distilled water if possible.). Check the charging system.
Except Maintenance-Free Battery:
If under the lower level, add distilled water only.

6. BRAKE AND CLUTCH FLUID LEVELS

(a) Check that the brake fluid level is near the upper level line on the see-through reservoirs.
(b) Check that the clutch fluid level is between MAX and MIN lines.

7. ENGINE DRIVE BELTS

Check all drive belts for fraying, cracks, wear or oil contamination.

8. ENGINE OIL LEVEL

Check the level on the dipstick with the engine turned off.

9. POWER STEERING FLUID LEVEL

- Check the level.
- The level should be in the ”HOT” or ”COLD” range depending on the fluid temperature.

10. AUTOMATIC TRANSMISSION FLUID LEVEL

(a) Park the vehicle on a level surface.
(b) With the engine idling and the parking brake applied, shift the selector into all positions from ”P” to ”L”, and then shift into ”P”.
(c) Pull out the dipstick and wipe off the fluid with a clean rag. Re-insert the dipstick and check that the fluid level is in the HOT range.
(d) Do this check with the fluid at normal driving temperature 70 - 80 ˚C (158 - 176 ˚F).

HINT:
Wait about 30 minutes before checking the fluid level after extended driving at high speeds, in hot weather, driving in heavy traffic or with a trailer.

11. EXHAUST SYSTEM

Visually inspcet for cracks, holes or loose supports.
If any change in the sound of the exhaust or smell of the exhaust fumes is noticed, have the cause located and corrected.

OUTSIDE VEHICLE

MA001-29

GENERAL MAINTENANCE

These are some maintenance and inspection items which are considered to be the owner's responsibility. They can be done by the owner or they can have them done at a service shop.
These items include those which should be checked on a daily basis, those which, in most cases, do not require (special) tools and those which are considered to be reasonable for the owner to do.
Items and procedures for general maintenance are as follows.

1. GENERAL NOTES

- Maintenance items may vary from country to country. Check the manual or guide in which the maintenance schedule is shown.
- Every service item in the periodic maintenance schedule must be performed.
- Periodic maintenance service must be performed according to whichever interval in the periodic maintenance schedule occurs first, the odometer reading (miles) or the time interval (months).
- Maintenance service after the last period should be performed at the same interval as before unless otherwise noted.
- Failure to do even one item an cause the engine to run poorly and increase exhaust emissions.

2. TIRES

(a) Check the pressure with a gauge. If necessary, adjust.
(b) Check for cuts, damage, uneven, or excessive wear.

3. WHEEL NUTS

When checking the tires, check the nuts for looseness or for missing nuts. If necessary, tighten them.

4. TIRE ROTATION

It is recommended that tires be rotated every 12,000 km (7,500 miles).

5. WINDSHIELD WIPER BLADES

Check for wear or cracks whenever they do not wipe clean. If necessary, replace.

6. FLUID LEAKS

(a) Check underneath for leaking fuel, oil, water or other fluid.
(b) If you smell gasoline fumes or notice any leak, have the cause found and corrected.

7. DOORS AND ENGINE HOOD

(a) Check that all doors including the trunk lid operate smoothly, and that all latches lock securely.
(b) Check that the engine hood secondary latch secures the hood from opening when the primary latch is released.

IN054-01

GLOSSARY OF SAE AND TOYOTA TERMS

This glossary lists all SAE-J1930 terms and abbreviations used in this manual in compliance with SAE recommendations, as well as their Toyota equivalents.

SAE ABBREVIATIONS	SAE TERMS	TOYOTA TERMS ( )--ABBREVIATIONS
A/C	Air Conditioning	Air Conditioner
ACL	Air Cleaner	Air Cleaner
AIR	Secondary Air Injection	Air Injection (AI)
AP	Accelerator Pedal	-
B+	Battery Positive Voltage	+B, Battery Voltage
BARO	Barometric Pressure	-
CAC	Charge Air Cooler	Intercooler
CARB	Carburetor	Carburetor
CFI	Continuous Fuel Injection	-
CKP	Crankshaft Position	Crank Angle
CL	Closed Loop	Closed Loop
CMP	Camshaft Position	Cam Angle
CPP	Clutch Pedal Position	-
CTOX	Continuous Trap Oxidizer	-
CTP	Closed Throttle Position	-
DFI	Direct Fuel Injection (Diesel)	Direct Injection (DI)
DI	Distributor Ignition	-
DLC1 DLC2 DLC3	Data Link Connector 1 Data Link Connector 2 Data Link Connector 3	1: Check Connector 2: Total Diagnosis Comunication Link (TDCL) 3: OBD II Diagnostic Connector
DTC	Diagnostic Trouble Code	Diagnostic Code
DTM	Diagnostic Test Mode	-
ECL	Engine Control Level	-
ECM	Engine Control Module	Engine ECU (Electronic Control Unit)
ECT	Engine Coolant Temperature	Coolant Temperature, Water Temperature (THW)
EEPROM	Electrically Erasable Programmable Read Only Memory	Electrically Erasable Programmable Read Only Memory (EEPROM), Erasable Programmable Read Only Memory (EPROM)
EFE	Early Fuel Evaporation	Cold Mixture Heater (CMH), Heat Control Valve (HCV)
EGR	Exhaust Gas Recirculation	Exhaust Gas Recirculation (EGR)
EI	Electronic Ignition	Distributorless Ignition (DI)
EM	Engine Modification	Engine Modification (EM)
EPROM	Erasable Programmable Read Only Memory	Programmable Read Only Memory (PROM)
EVAP	Evaporative Emission	Evaporative Emission Control (EVAP)
FC	Fan Control	-
FEEPROM	Flash Electrically Erasable Programmable Read Only Memory	-
FEPROM	Flash Erasable Programmable Read Only Memory	-
FF	Flexible Fuel	-
FP	Fuel Pump	Fuel Pump
GEN	Generator	Alternator
GND	Ground	Ground (GND)

HO2S	Heated Oxygen Sensor	Heated Oxygen Sensor (HO2S)
IAC	Idle Air Control	Idle Speed Control (ISC)
IAT	Intake Air Temperature	Intake or Inlet Air Temperature
ICM	Ignition Control Module	-
IFI	Indirect Fuel Injection	Indirect Injection
IFS	Inertia Fuel-Shutoff	-
ISC	Idle Speed Control	-
KS	Knock Sensor	Knock Sensor
MAF	Mass Air Flow	Air Flow Meter
MAP	Manifold Absolute Pressure	Manifold Pressure Intake Vacuum
MC	Mixture Control	Electric Bleed Air Control Valve (EBCV) Mixture Control Valve (MCV) Electric Air Control Valve (EACV)
MDP	Manifold Differential Pressure	-
MFI	Multiport Fuel Injection	Electronic Fuel Injection (EFI)
MIL	Malfunction Indicator Lamp	Check Engine Light
MST	Manifold Surface Temperature	-
MVZ	Manifold Vacuum Zone	-
NVRAM	Non-Volatile Random Access Memory	-
O2S	Oxygen Sensor	Oxygen Sensor, O_2 Sensor (O_2S)
OBD	On-Board Diagnostic	On-Board Diagnostic (OBD)
OC	Oxidation Catalytic Converter	Oxidation Catalyst Converter (OC), CCo
OP	Open Loop	Open Loop
PAIR	Pulsed Secondary Air Injection	Air Suction (AS)
PCM	Powertrain Control Module	-
PNP	Park/Neutral Position	-
PROM	Programmable Read Only Memory	-
PSP	Power Steering Pressure	-
PTOX	Periodic Trap Oxidizer	Diesel Particulate Filter (DPF) Diesel Particulate Trap (DPT)
RAM	Random Access Memory	Random Access Memory (RAM)
RM	Relay Module	-
ROM	Read Only Memory	Read Only Memory (ROM)
RPM	Engine Speed	Engine Speed
SC	Supercharger	Supercharger
SCB	Supercharger Bypass	-
SFI	Sequential Multiport Fuel Injection	Electronic Fuel Injection (EFI), Sequential Injection
SPL	Smoke Puff Limiter	-
SRI	Service Reminder Indicator	-
SRT	System Readiness Test	-
ST	Scan Tool	-
TB	Throttle Body	Throttle Body
TBI	Throttle Body Fuel Injection	Single Point Injection Central Fuel Injection (Ci)
TC	Turbocharger	Turbocharger
TCC	Torque Converter Clutch	Torque Converter

TCM	Transmission Control Module	Transmission ECU (Electronic Control Unit)
TP	Throttle Position	Throttle Position
TR	Transmission Range	-
TVV	Thermal Vacuum Valve	Bimetallic Vacuum Switching Valve (BVSV) Thermostatic Vacuum Switching Valve (TVSV)
TWC	Three-Way Catalytic Converter	Three-Way Catalytic (TWC) CC_{RO}
TWC+OC	Three-Way + Oxidation Catalytic Converter	CC_R + CCo
VAF	Volume Air Flow	Air Flow Meter
VR	Voltage Regulator	Voltage Regulator
VSS	Vehicle Speed Sensor	Vehicle Speed Sensor (Read Switch Type)
WOT	Wide Open Throttle	Full Throttle
WU-OC	Warm Up Oxidation Catalytic Converter	-
WU-TWC	Warm Up Three-Way Catalytic Converter	Manifold Converter
3GR	Third Gear	-
4GR	Fourth Gear	-

STANDARD BOLT

HOW TO DETERMINE BOLT STRENGTH

SS00F-01

	Mark	Class		Mark	Class
Hexagon head bolt	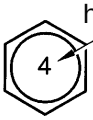 4- 5- 6- 7- 8- 9- 10- 11-	4T 5T 6T 7T 8T 9T 10T 11T	Hexagon flange bolt w/ washer hexagon bolt	 4 Protruding lines	9T
			Hexagon flange bolt w/ washer hexagon bolt	 5 Protruding lines	10T
	 No mark	4T	Hexagon flange bolt w/ washer hexagon bolt	 6 Protruding lines	11T
Hexagon flange bolt w/ washer hexagon bolt	 No mark	4T	Stud bolt		4T
Hexagon head bolt	 2 Protruding lines	5T			
Hexagon flange bolt w/ washer hexagon bolt	 2 Protruding lines	6T			6T
Hexagon head bolt	 3 Protruding lines	7T	Welded bolt	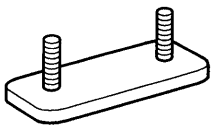	4T
Hexagon head bolt	 4 Protruding lines	8T			

V06821

CRUISE CONTROL SYSTEM

HOW TO PROCEED WITH TROUBLESHOOTING

DI54I-01

Perform troubleshooting in accordance with the procedure on the following page.

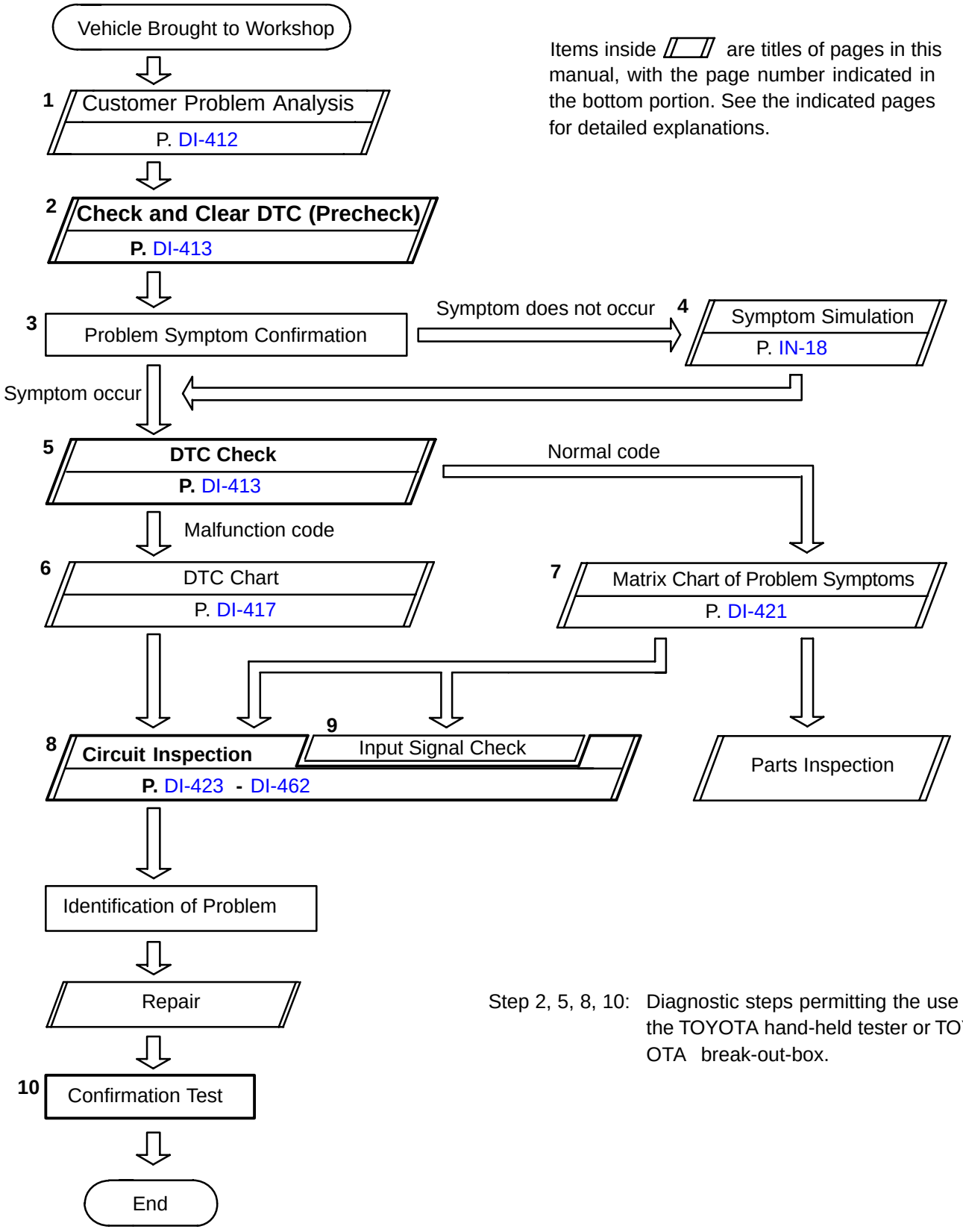

Items inside ▱ are titles of pages in this manual, with the page number indicated in the bottom portion. See the indicated pages for detailed explanations.

Step 2, 5, 8, 10: Diagnostic steps permitting the use of the TOYOTA hand-held tester or TOYOTA break-out-box.

ENGINE (5S-FE)

HOW TO PROCEED WITH TROUBLESHOOTING

DI51I-01

Troubleshoot in accordance with the procedure on the following pages.

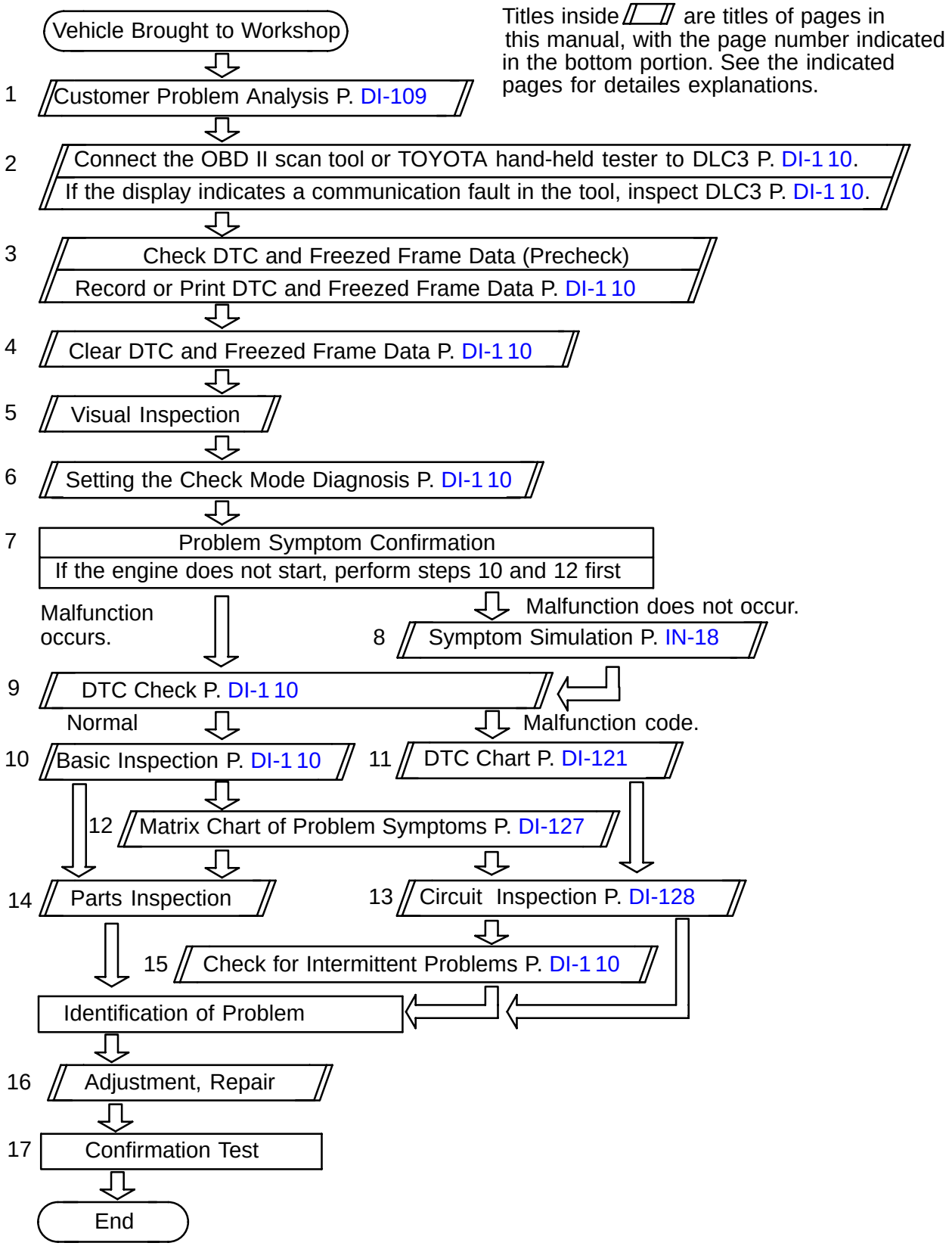

ENGINE (7A-FE)

DI50F-01

HOW TO PROCEED WITH TROUBLESHOOTING

Troubleshoot in accordance with the procedure on the following page.

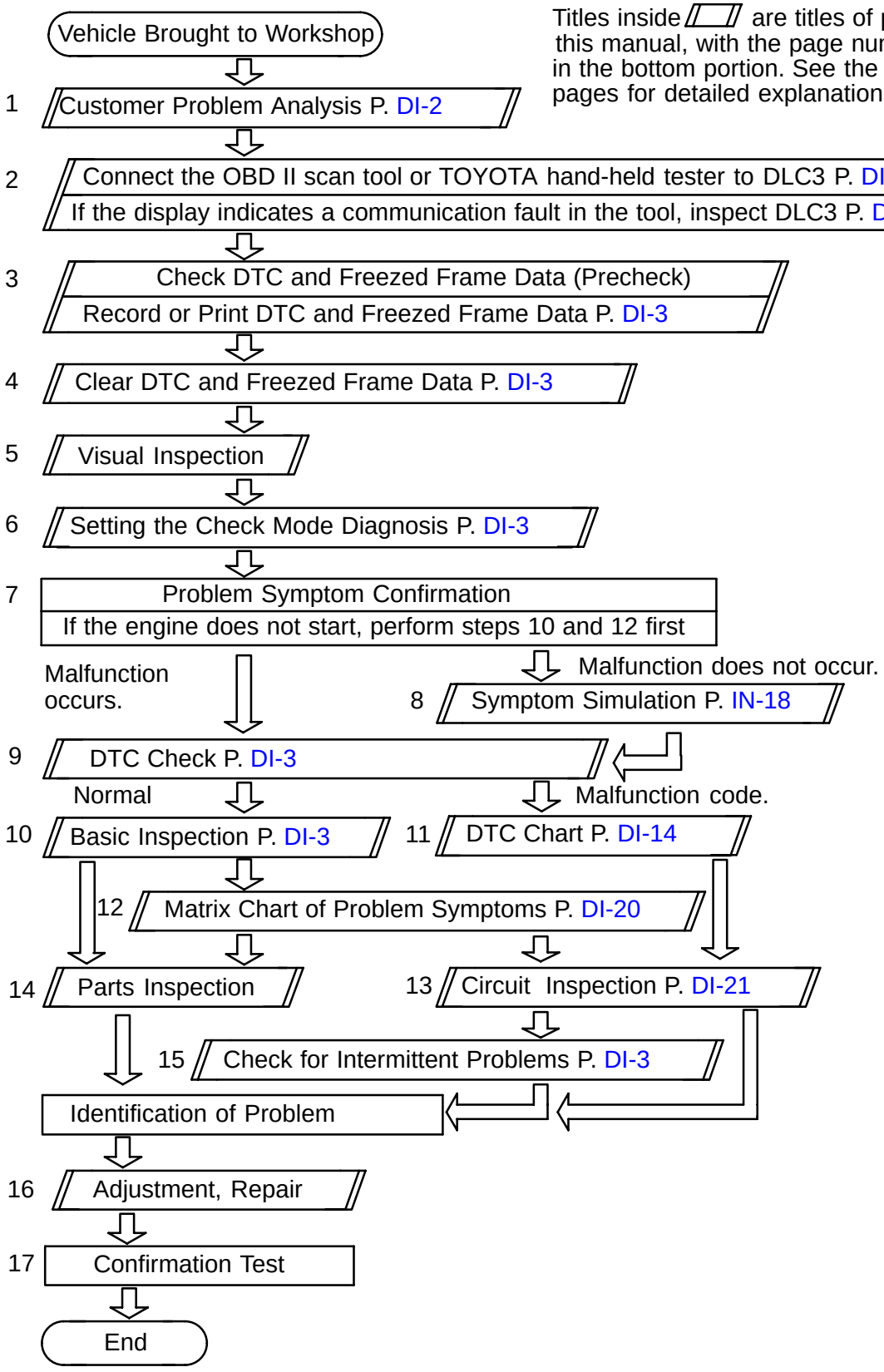

Titles inside ▱ are titles of pages in this manual, with the page number indicated in the bottom portion. See the indicated pages for detailed explanations.

AUTOMATIC TRANSAXLE (A140E)

DI52J-02

HOW TO PROCEED WITH TROUBLESHOOTING

Troubleshoot in accordance with the procedure on the following pages.

Item inside ▱ are titles of pages in the manual, with the page number indicated in the bottom portion. See the indicated pages for detailed explanations.

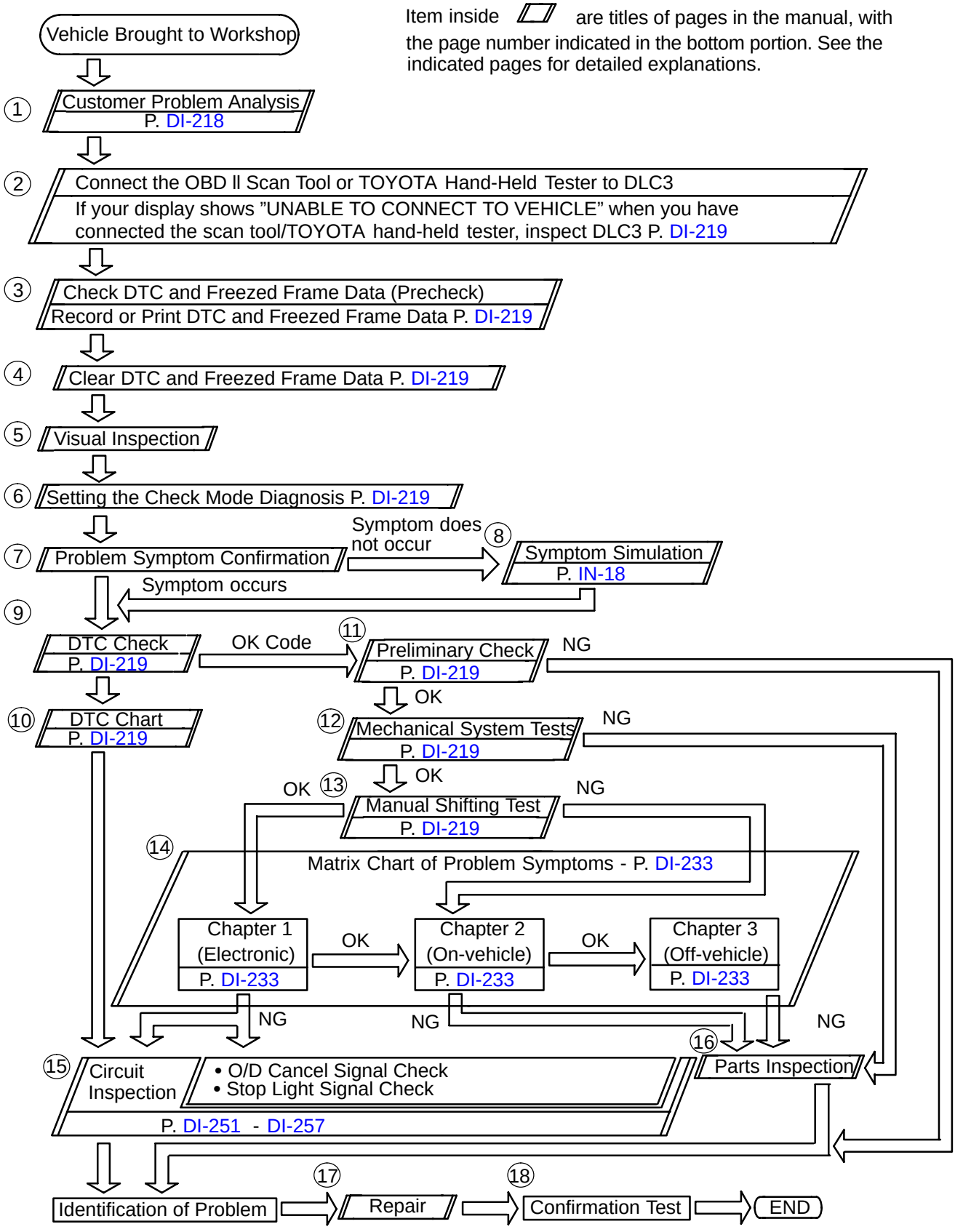

AUTOMATIC TRANSAXLE (A246E)

HOW TO PROCEED WITH TROUBLESHOOTING

DI5ZZ-03

Items inside ▱ are titles of pages in this manual, with the page number indicated in the bottom portion. See the indicated pages for detailed explanations.

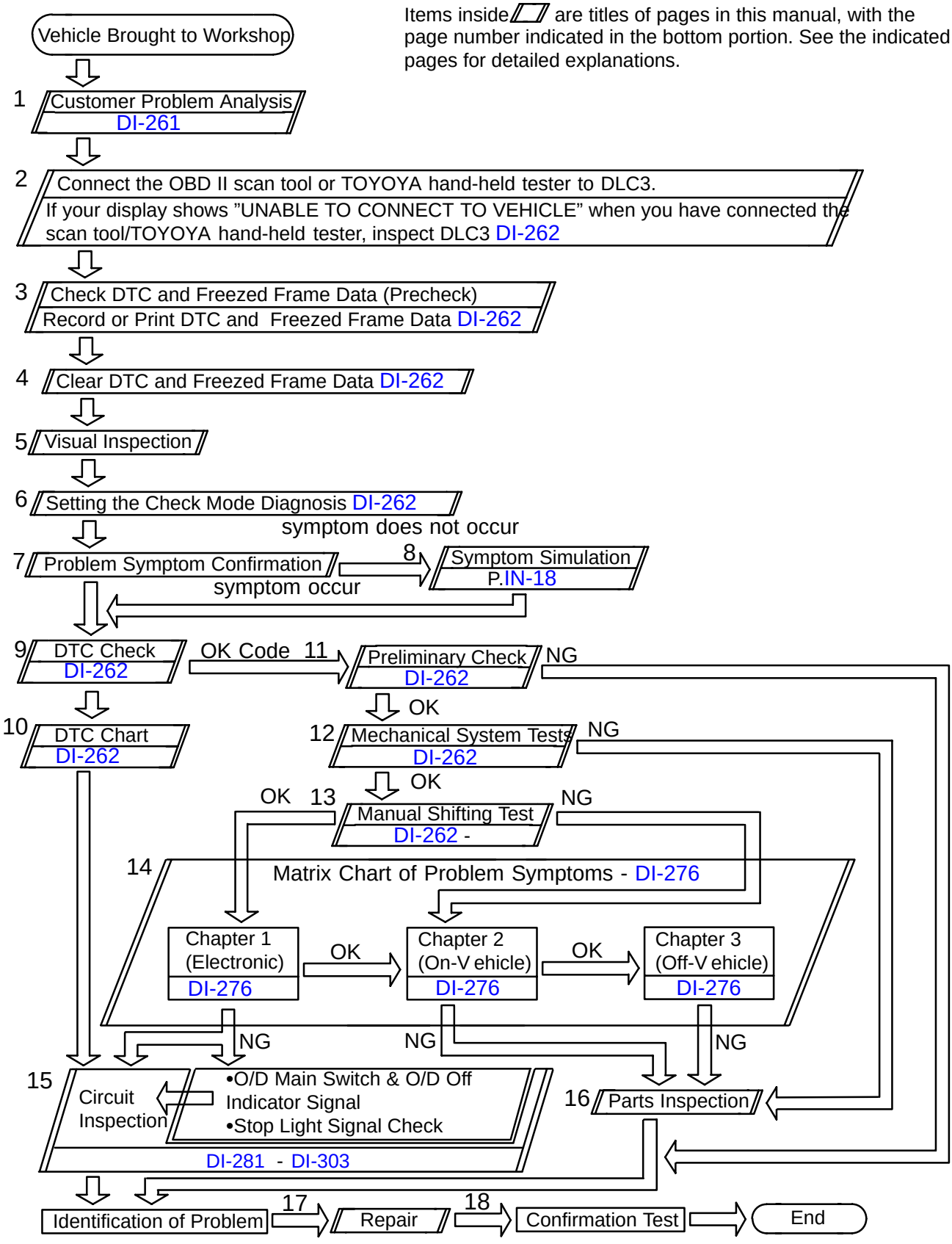

IN073-03

HOW TO PROCEED WITH TROUBLESHOOTING

Carry out troubleshooting in accordance with the procedure on the following page. Here, only the basic procedure is shown. Details are provided in Diagnostics section, showing the most effective methods for each circuit. Confirm the troubleshooting procedures first for the relevant circuit before beginning troubleshooting of that circuit.

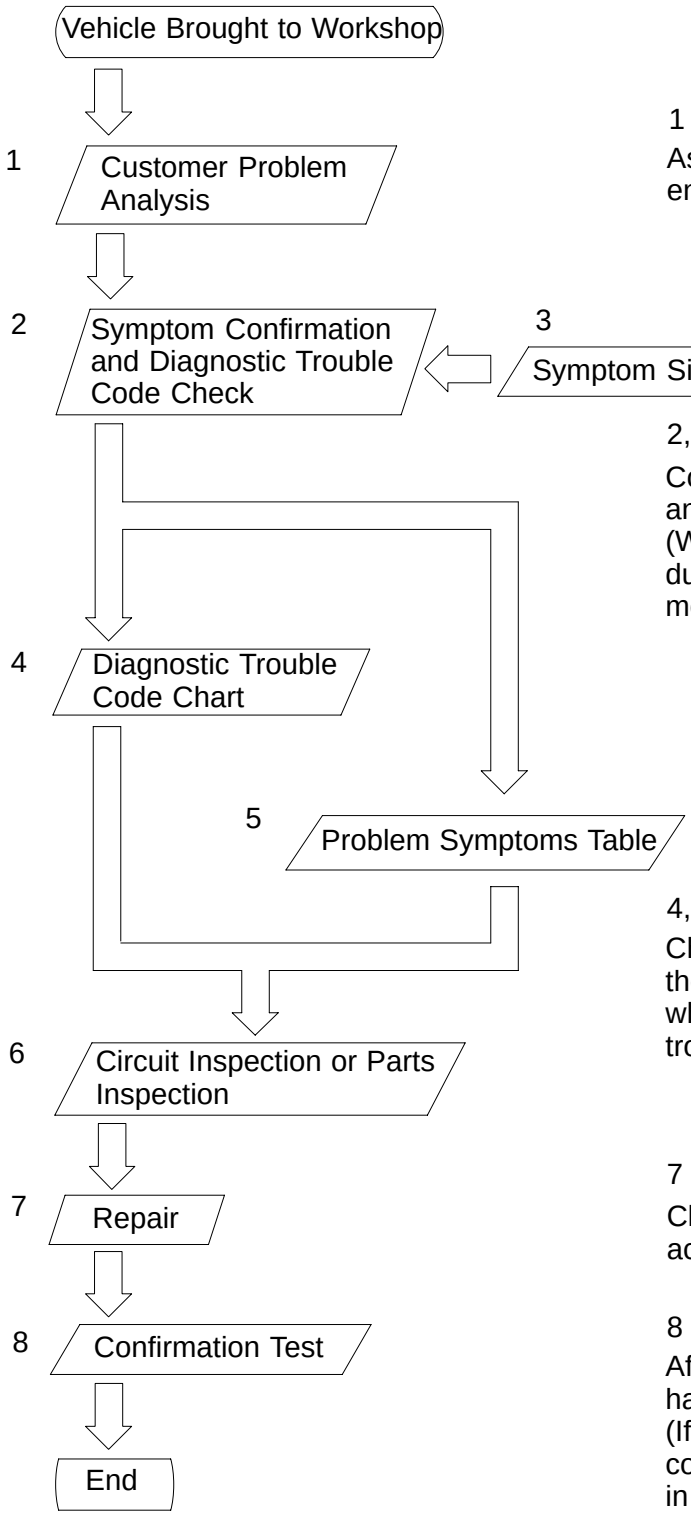

1

Ask the customer about the conditions and the environment when the problem occurred.

2, 3

Confirm the symptoms and the problem conditions, and check the diagnostic trouble codes.
(When the problem symptoms do not appear during confirmation, use the symptom simulation method described later on.)

4, 5, 6

Check the results obtained in Step 2, then confirm the inspection procedure for the system or the part which should be checked using the diagnostic trouble code chart or the problem symptoms table.

7

Check and repair the affected system or part in accordance with the instructions in Step 6.

8

After completing repairs, confirm that the problem has been eliminated.
(If the problem is not reproduced, perform the confirmation test under the same conditions and in the same environment as when it occurred for the first time.)

1. CUSTOMER PROBLEM ANALYSIS

In troubleshooting, the problem symptoms must be confirmed accurately and all preconceptions must be cleared away in order to give an accurate judgement. To ascertain just what the problem symptoms are, it is extremely important to ask the customer about the problem and the conditions at the time it occurred.

Important Point in the Problem Analysis:

The following 5 items are important points in the problem analysis. Past problems which are thought to be unrelated and the repair history, etc. may also help in some cases, so as much information as possible should be gathered and its relationship with the problem symptoms should be correctly ascertained for reference in troubleshooting. A customer problem analysis table is provided in the Diagnostics section for each system for your use.

Important Points in the Customer Problem Analysis

- What ----- Vehicle model, system name
- When ----- Date, time, occurrence frequency
- Where ----- Road conditions
- Under what conditions? ----- Running conditions, driving conditions, weather conditions
- How did it happen? ----- Problem symptoms

(Sample) Engine control system check sheet.

CUSTOMER PROBLEM ANALYSIS CHECK

ENGINE CONTROL SYSTEM Check Sheet

Inspector's Name _____

Customer's Name		**Model and Model Year**	
Driver's Name		**Frame No.**	
Data Vehicle Brought in		**Engine Model**	
License No.		**Odometer Reading**	km miles

Problem Symptoms	☐ **Engine does not Start**	☐ **Engine does not crank** ☐ **No initial combustion** ☐ **No complete combustion**
	☐ **Difficult to Start**	☐ **Engine cranks slowly** ☐ **Other** _____
	☐ **Poor Idling**	☐ **Incorrect first idle** ☐ **Idling rpm is abnormal** ☐ **High (rpm)** ☐ **Low (rpm)** ☐ **Rough idling** ☐ **Other** _____
	☐ **Poor Drive ability**	☐ **Hesitation** ☐ **Back fire** ☐ **Muffler explosion (after-fire)** ☐ **Surging** ☐ **Knocking** ☐ **Other** _____
	☐ **Engine Stall**	☐ **Soon after starting** ☐ **After accelerator pedal depressed** ☐ **After accelerator pedal released** ☐ **During A/C operation** ☐ **Shifting from N to D** ☐ **Other** _____
	☐ **Others**	

☐ **Constant** ☐ **Sometimes (times per day/month)**

2. SYMPTOM CONFIRMATION AND DIAGNOSTIC TROUBLE CODE CHECK

The diagnostic system in the CELICA fulfills various functions. The first function is the Diagnostic Trouble Code Check in which a malfunction in the signal circuits to the ECU is stored in code in the ECU memory at the time of occurrence, to be output by the technician during troubleshooting. Another function is the Input Signal Check which checks if the signals from various switches are sent to the ECU correctly.
By using these check functions, the problem areas can be narrowed down quickly and troubleshooting can be performed effectively. Diagnostic functions are incorporated in the following systems in the CELICA.

System	Diagnostic Trouble Code Check	Input Signal Check (Sensor Check)	Other Diagnosis Function
Engine (7A-FE)	○ (with Test Mode)	○	Diagnostic Test Mode
Engine (5S-FE)	○ (with Test Mode)	○	Diagnostic Test Mode
Automatic Transaxle (A140E)	○ (with Test Mode)	○	Diagnostic Test Mode
Automatic Transaxle (A246E)	○ (with Test Mode)	○	Diagnostic Test Mode
Anti-Lock Brake System	○	○	
Supplemental Restraint System	○	○	
Cruise Control	○	○	

In diagnostic trouble code check, it is very important to determine whether the problem indicated by the diagnostic trouble code is still occurring or occurred in the past but returned to normal at present. In addition, it must be checked in the problem symptom check whether the malfunction indicated by the diagnostic trouble code is directly related to the problem symptom or not. For this reason, the diagnostic trouble codes should be checked before and after the symptom confirmation to determine the current conditions, as shown in the table below. If this is not done, it may, depending on the case, result in unnecessary troubleshooting for normally operating systems, thus making it more difficult to locate the problem, or in repairs not pertinent to the problem. Therefore, always follow the procedure in correct order and perform the diagnostic trouble code check.

DIAGNOSTIC TROUBLE CODE CHECK PROCEDURE

Diagnostic Trouble Code Check (Make a note of and then clear)	**Confirmation of Symptoms**	**Diagnostic Trouble Code Check**	**Problem Condition**
Diagnostic Trouble Code Display	Problem symptoms exist	Same diagnostic trouble code is displayed	Problem is still occurring in the diagnostic circuit
⇨		Normal code is displayed	The problem is still occurring in a place other than in the diagnostic circuit (The diagnostic trouble code displayed first is either for a past problem or it is a secondary problem)
⇨	No problem symptoms exist		The problem occurred in the diagnostic circuit in the past
Normal Code Display ⇨	Problem symptoms exist	Normal code is displayed	The problem is still occurring in a place other than in the diagnostic circuit
⇨	No problem symptoms exist	Normal code is displayed	The problem occurred in a place other than in the diagnostic circuit in the past

Taking into account the points in the previous page, a flow chart showing how to proceed with troubleshooting using the diagnostic trouble code check is shown below. This flow chart shows how to utilize the diagnostic trouble code check effectively, then by carefully checking the results, indicates how to proceed either to diagnostic trouble code troubleshooting or to troubleshooting of problem symptoms table.

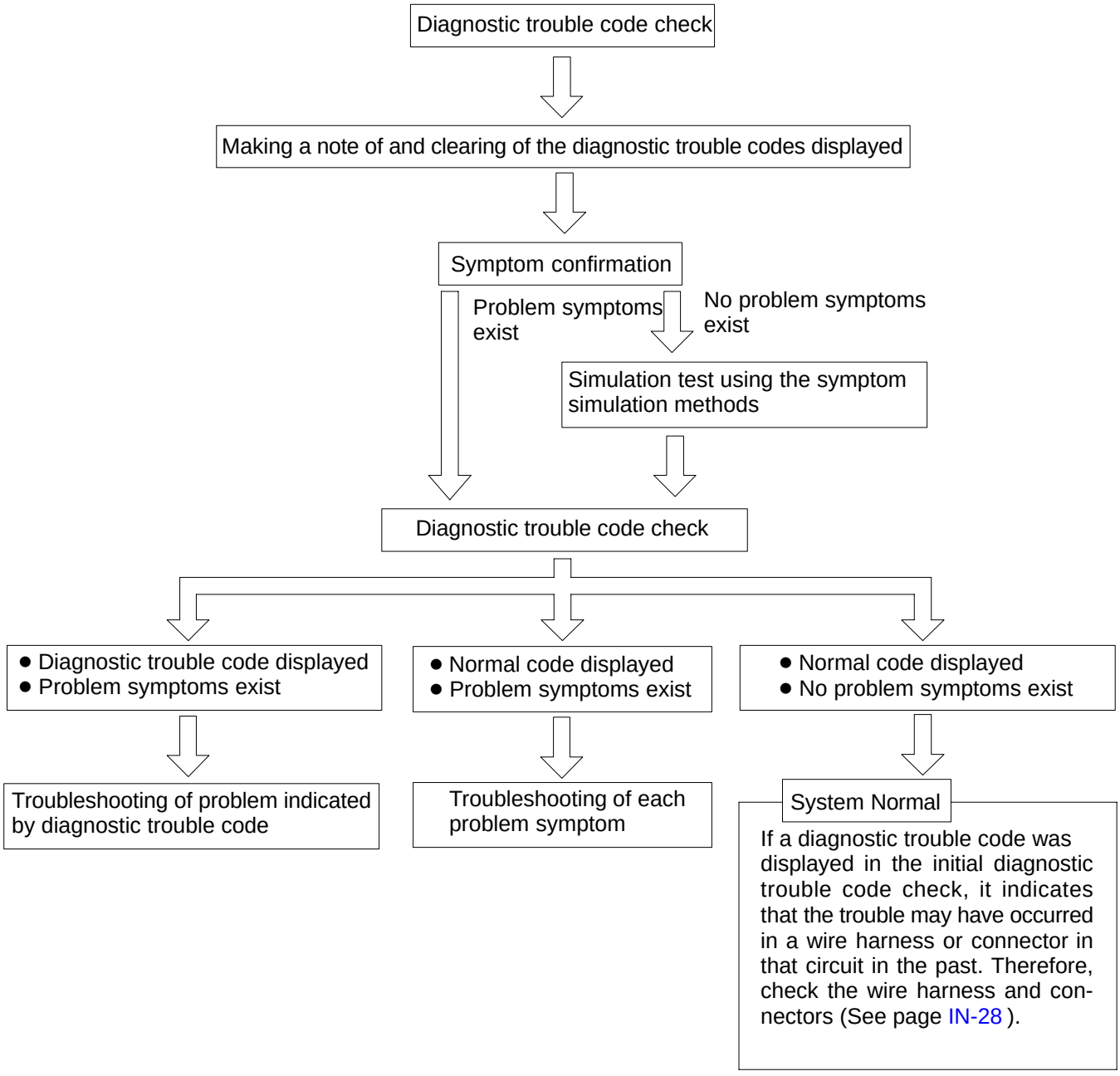

3. SYMPTOM SIMULATION

The most difficult case in troubleshooting is when there are no problem symptoms occurring. In such cases, a thorough customer problem analysis must be carried out, then simulate the same or similar conditions and environment in which the problem occurred in the customer's vehicle. No matter how much experience a technician has, or how skilled he may be, if he proceeds to troubleshoot without confirming the problem symptoms he will tend to overlook something important in the repair operation and make a wrong guess somewhere, which will only lead to a standstill. For example, for a problem which only occurs when the engine is cold, or for a problem which occurs due to vibration caused by the road during driving, etc., the problem can never be determined so long as the symptoms are confirmed with the engine hot condition or the vehicle at a standstill. Since vibration, heat or water penetration (moisture) is likely cause for problem which is difficult to reproduce, the symptom simulation tests introduced here are effective measures in that the external causes are applied to the vehicle in a stopped condition.

Important Points in the Symptom Simulation Test:

In the symptom simulation test, the problem symptoms should of course be confirmed, but the problem area or parts must also be found out. To do this, narrow down the possible problem circuits according to the symptoms before starting this test and connect a tester beforehand. After that, carry out the symptom simulation test, judging whether the circuit being tested is defective or normal and also confirming the problem symptoms at the same time. Refer to the problem symptoms table for each system to narrow down the possible causes of the symptom.

1	**VIBRATION METHOD: When vibration seems to be the major cause.**
CONNECTORS Slightly shake the connector vertically and horizontally. **WIRE HARNESS** Slightly shake the wire harness vertically and horizontally. The connector joint, fulcrum of the vibration, and body through portion are the major areas to be checked thoroughly.	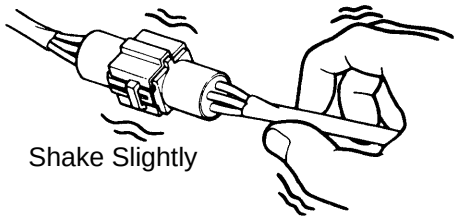 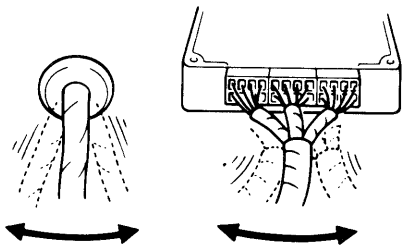 FI2331 FI2332
PARTS AND SENSOR Apply slight vibration with a finger to the part of the sensor considered to be the problem cause and check that the malfunction occurs. HINT: Applying strong vibration to relays may result in open relays.	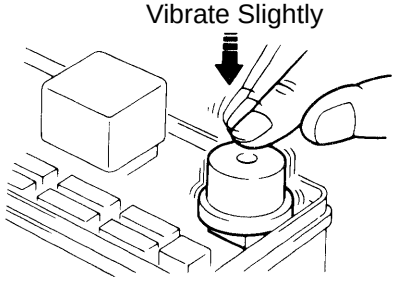 FI2330

V07268

2	**HEAT METHOD: When the problem seems to occur when the suspect area is heated.**

Heat the component that is the likely cause of the malfunction with a hair dryer or similar object. Check to see if the malfunction occurs.

NOTICE:

(1) Do not heat to more than 60 ˚C (140 ˚F). (Temperature is limited not to damage the components.)

(2) Do not apply heat directly to parts in the ECU.

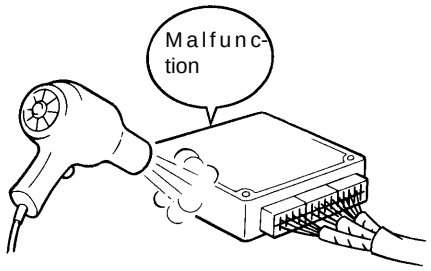

FI2334

3	**WATER SPRINKLING METHOD: When the malfunction seems to occur on a rainy day or in a high-humidity condition.**

Sprinkle water onto the vehicle and check to see if the malfunction occurs.

NOTICE:

(1) Never sprinkle water directly into the engine compartment, but indirectly change the temperature and humidity by applying water spray onto the radiator front surface.

(2) Never apply water directly onto the electronic components.

HINT:
If a vehicle is subject to water leakage, the leaked water may contaminate the ECU. When testing a vehicle with a water leakage problem, special caution must be taken.



FI6649

4	**OTHER: When a malfunction seems to occur when electrical load is excessive.**

Turn on all electrical loads including the heater blower, head lights, rear window defogger, etc. and check to see if the malfunction occurs.

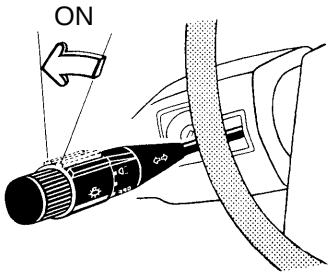

FI2336

V07469

4. DIAGNOSTIC TROUBLE CODE CHART

The inspection procedure is shown in the table below. This table permits efficient and accurate troubleshooting using the diagnostic trouble codes displayed in the diagnostic trouble code check. Proceed with troubleshooting in accordance with the inspection procedure given in the diagnostic chart corresponding to the diagnostic trouble codes displayed. The engine diagnostic trouble code chart is shown below as an example.

- DTC No.
  Indicates the diagnostic trouble code.
- Page or Instructions
  Indicates the page where the inspection procedure for each circuit is to be found, or gives instructions for checking and repairs.

- Trouble Area
  Indicates the suspect area of the problem.

- Detection Item
  Indicates the system of the problem or contents of the problem.

DTC CHART (SAE Controlled)

HINT:
Parameters listed in the chart may not be exactly the same as your reading due to the type of instrument or other factors.

If a malfunction code is displayed during the DTC check mode, check the circuit for that code listed in the table below. For details of each code, turn to the page referred to under the "See page" for the respective "DTC No." in the DTC chart.

DTC No. (See page)	Detection Item	Trouble Area	MIL*	Memory
P0105 (DI-21)	Manifold Absolute Plessure/Barometric Pressure Circuit Malfunction	● Open or short in manifold absolute pressure sensor circuit ● Mass air flow meter ● ECM	○	○
P0106 (DI-25)	Manifold Absolute Plessure/Barometric Pressure Circuit Range/Performance Problem	● Mass air flow meter	○	○
P0110 (DI-26)	Intake Air Temp. Circuit Malfunction	● Open or short in intake air temp. sensor circuit ● Intake air temp. sensor ● ECM	○	○
P0115 (DI-30)	Engine Coolant Temp. Circuit Malfunction	● Open or short in engine coolant temp. sensor circuit ● Engine coolant temp. sensor ● ECM	○	○
P0116	Engine Coolant Temp. Circuit ...ge/Performance Problem	● Engine coolant temp. sensor ● Cooling system	○	○
	...osition Sensor/Switch ...ction	● Open or short in throttle position sensor circ... ● Throttle position sensor ● ECM		

5. PROBLEM SYMPTOMS TABLE

The suspect circuits or parts for each problem symptom are shown in the table below. Use this table to troubleshoot the problem when a ”Normal” code is displayed in the diagnostic trouble code check but the problem is still occurring. Numbers in the table indicate the inspection order in which the circuits or parts should be checked.

HINT:

When the problem is not detected by the diagnostic system even though the problem symptom is present, it is considered that the problem is occurring outside the detection range of the diagnostic system, or that the problem is occurring in a system other than the diagnostic system.

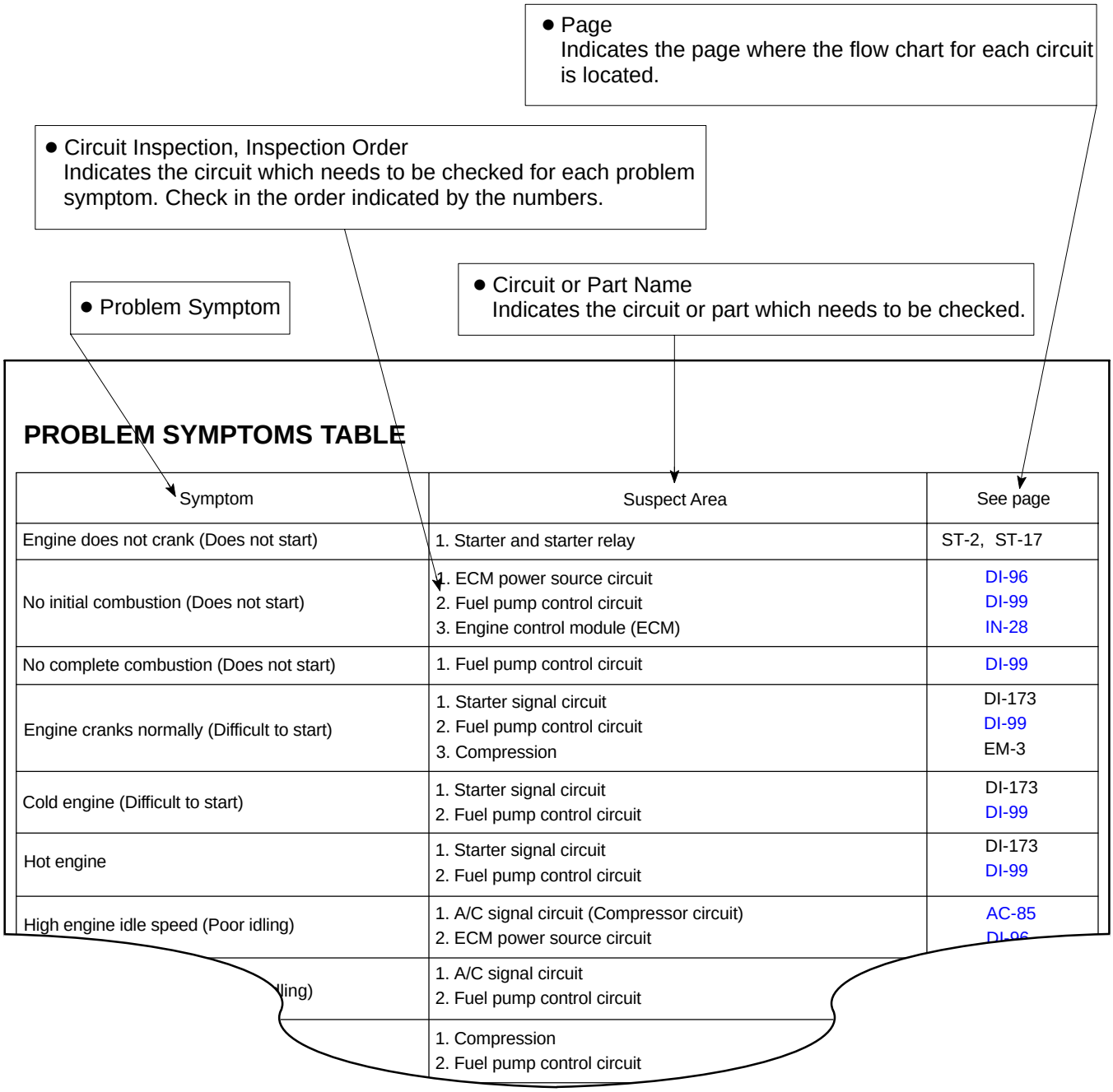

PROBLEM SYMPTOMS TABLE

Symptom	Suspect Area	See page
Engine does not crank (Does not start)	1. Starter and starter relay	ST-2, ST-17
No initial combustion (Does not start)	1. ECM power source circuit 2. Fuel pump control circuit 3. Engine control module (ECM)	DI-96 DI-99 IN-28
No complete combustion (Does not start)	1. Fuel pump control circuit	DI-99
Engine cranks normally (Difficult to start)	1. Starter signal circuit 2. Fuel pump control circuit 3. Compression	DI-173 DI-99 EM-3
Cold engine (Difficult to start)	1. Starter signal circuit 2. Fuel pump control circuit	DI-173 DI-99
Hot engine	1. Starter signal circuit 2. Fuel pump control circuit	DI-173 DI-99
High engine idle speed (Poor idling)	1. A/C signal circuit (Compressor circuit) 2. ECM power source circuit	AC-85 DI-96
...lling)	1. A/C signal circuit 2. Fuel pump control circuit	
	1. Compression 2. Fuel pump control circuit	

6. CIRCUIT INSPECTION

How to read and use each page is shown below.

● Diagnostic Trouble Code No. and Detection Item

● Circuit Description
The major role and operation, etc. of the circuit and its component parts are explained.

DTC	P0325	Knock Sensor 1 Circuit Malfunction

CIRCUIT DESCRIPTION

Knock sensor is fitted to the cylinder block to detect engine knocking. This sensor contains a piezoelectric element which generates a voltage when it becomes deformed, which occurs when the cylinder block vibrates due to knocking. If engine knocking occurs, ignition timing is retarded to suppress it.

DTC No.	DTC Detecting Condition	Trouble Area
P0325	No knock sensor 1 signal to ECM with engine speed, 1,200 rpm or more.	● Open or short in knock sensor1 circuit ● Knock sensor 1 (looseness) ● ECM

If the ECM detects the above diagnosis conditions, it operates the fail safe function in which the corrective retard angle value is set to the maximum value.

● Indicates the diagnostic trouble code, diagnostic trouble code set parameter and suspect area of the problem.

WIRING DIAGRAM

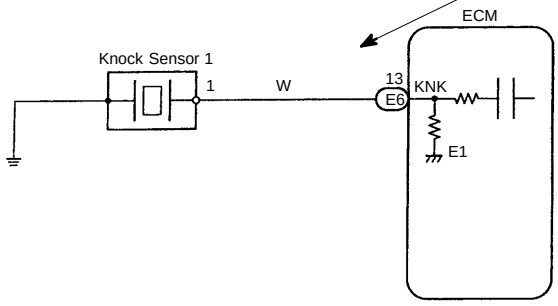

● Wiring Diagram
This shows a wiring diagram of the circuit.
Use this diagram together with ELECTRICAL WIRING DIAGRAM to thoroughly understand the circuit.
Wire colors are indicated by an alphabetical code.
B = Black, L = Blue, R = Red, BR = Brown,
LG = Light Green, V = Violet, G = Green,
O = Orange, W = White, GR = Gray, P = Pink,
Y = Yellow
The first letter indicates the basic wire color and the second letter indicates the color of the stripe.

V08423

● Indicates the position of the ignition switch during the check.

LOCK
Ignition Switch LOCK (OFF)

ON
Ignition Switch ON

START
Ignition Switch START

ACC
Ignition Switch ACC

● Inspection Procedure
Use the inspection procedure to determine if the circuit is normal or abnormal, and if it is abnormal, use it to determine whether the problem is located in the sensors, actuators, wire harness or ECU.

INSPECTION PROCEDURE

1 **Check continuity between terminal KNK of ECM connector and body ground.**

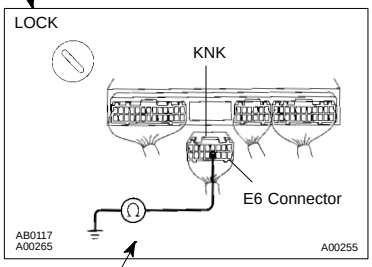

PREPARATION:
(a) Remove the glove compartment (See page SF-37).
(b) Disconnect the E6 connector of ECM.

CHECK:
Measure resistance between terminal KNK of ECM connector and body ground.

OK:
Resistance: 1 MΩ or higher

OK → **Go to step 3.**

NG

2 **Check knock sensor (See page SF-34).**

OK → **Replace knock sensor.**

● Indicates the place to check the voltage or resistance.
● Indicates the connector position to be checked, from the front or back side.

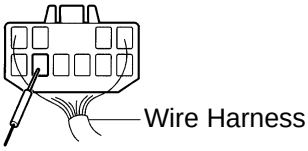

Check from the connector back side. (with harness)

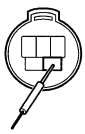

Check from the connector front side. (without harness)
In this case, care must be taken not to bend the terminals.

● Indicates the condition of the connector of ECU during the check.

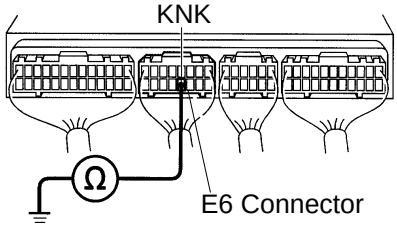

Connector being checked is connected.

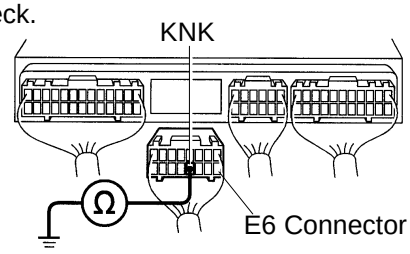

Connector being checked is disconnected.

V08425

SUPPLEMENTAL RESTRAINT SYSTEM

HOW TO PROCEED WITH TROUBLESHOOTING

DI53Y-01

Perform troubleshooting in accordance with the procedure on the following pages.

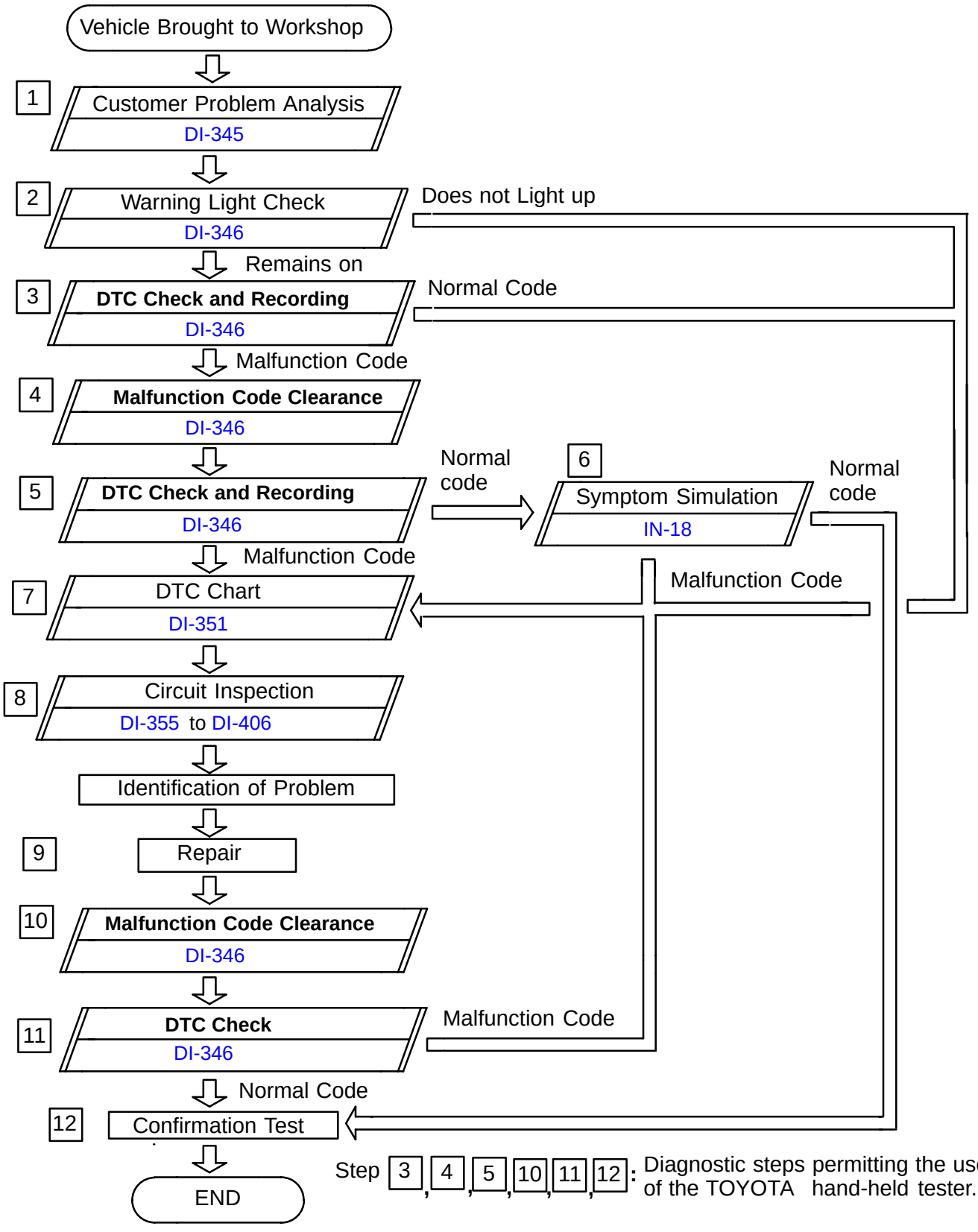

IN052-07

HOW TO USE THE DIAGNOSTIC CHART AND INSPECTION PROCEDURE

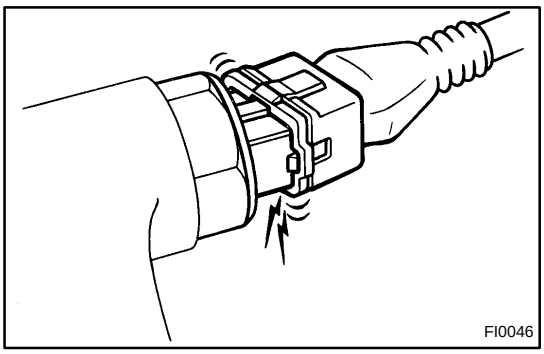
FI0046

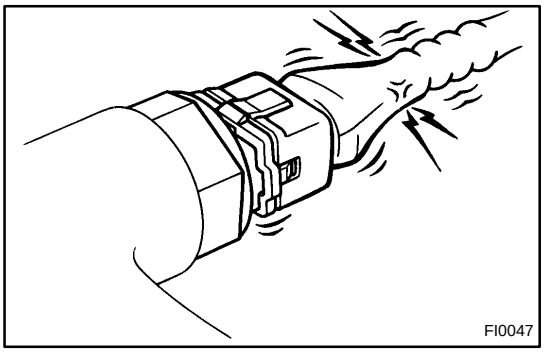
FI0047

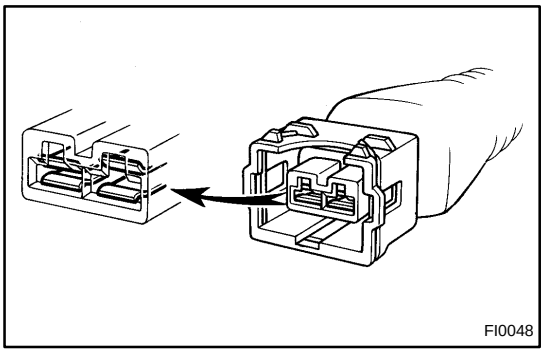
FI0048

1. CONNECTOR CONNECTION AND TERMINAL INSPECTION

- For troubleshooting, diagnostic trouble code charts or problem symptom table are provided for each circuit with detailed inspection procedures on the following pages.
- When all the component parts, wire harnesses and connectors of each circuit except the ECU are found to be normal in troubleshooting, then it is determined that the problem is in the ECU. Accordingly, if diagnosis is performed without the problem symptoms occurring, refer to step 8 to replace the ECU, even if the problem is not in the ECU. So always confirm that the problem symptoms are occurring, or proceed with inspection while using the symptom simulation method.
- The instructions ”Check wire harness and connector” and ”Check and replace ECU” which appear in the inspection procedure, are common and applicable to all diagnostic trouble codes. Follow the procedure outlined below whenever these instructions appear.

OPEN CIRCUIT:

This could be due to a disconnected wire harness, faulty contact in the connector, and a connector terminal pulled out, etc.

HINT:

- It is rarely the case that a wire is broken in the middle of it. Most cases occur at the connector. In particular, carefully check the connectors of sensors and actuators.
- Faulty contact could be due to rusting of the connector terminals, to foreign materials entering terminals or a deformation of connector terminals. Simply disconnecting and reconnecting the connectors once changes the condition of the connection and may result in a return to normal operation. Therefore, in troubleshooting, if no abnormality is found in the wire harness and connector check, but the problem disappears after the check, then the cause is considered to be in the wire harness or connectors.

SHORT CIRCUIT:

This could be due to a contact between wire harness and the body ground or to a short circuit occurred inside the switch, etc.

HINT:

When there is a short circuit between the wire harness and body ground, check thoroughly whether the wire harness is caught in the body or is clamped properly.

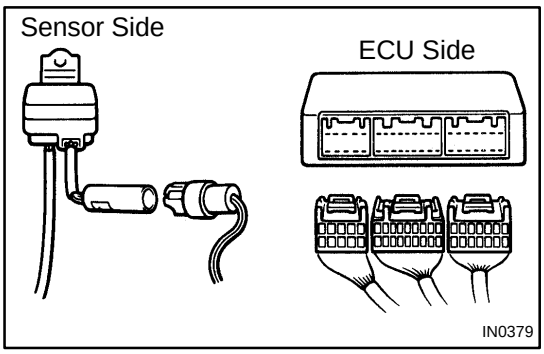

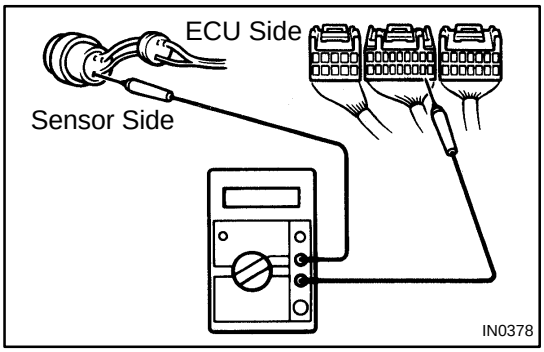

2. CONTINUITY CHECK (OPEN CIRCUIT CHECK)

(a) Disconnect the connectors at both ECU and sensor sides.

(b) Measure the resistance between the applicable terminals of the connectors.

Resistance: 1Ω or less

HINT:

- Measure the resistance while lightly shaking the wire harness vertically and horizontally.
- When tester probes are inserted into a connector, insert the probes from the back. For waterproof connectors in which the probes cannot be inserted from the back, be careful not to bend the terminals when inserting the tester probes.

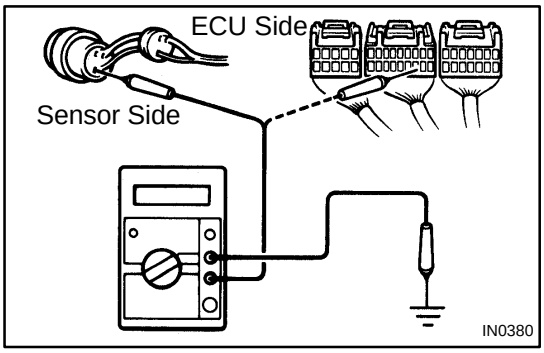

3. RESISTANCE CHECK (SHORT CIRCUIT CHECK)

(a) Disconnect the connectors on both ends.

(b) Measure the resistance between the applicable terminals of the connectors and body ground. Be sure to carry out this check on the connectors on both ends.

Resistance: 1 MΩ or higher

HINT:

Measure the resistance while lightly shaking the wire harness vertically and horizontally.

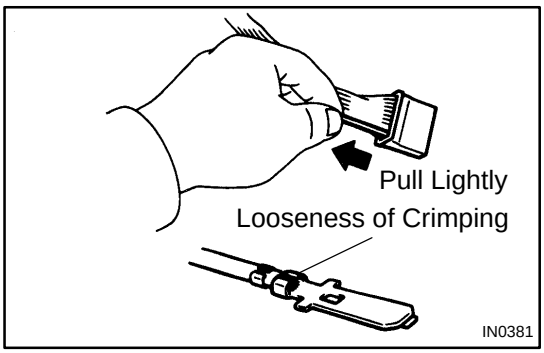

4. VISUAL CHECK AND CONTACT PRESSURE CHECK

(a) Disconnect the connectors at both ends.

(b) Check for rust or foreign material, etc. in the terminals of the connectors.

(c) Check crimped portions for looseness or damage and check that the terminals are secured in lock portion.

HINT:

The terminals should not come out when pulled lightly.

(d) Prepare a test male terminal and insert it in the female terminal, then pull it out.

NOTICE:

When testing a gold-plated female terminal, always use a gold-plated male terminal.

HINT:

When the test terminal is pulled out more easily than others, there may be poor contact in that section.

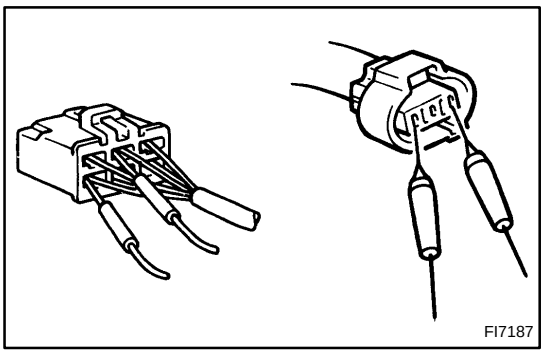

5. CONNECTOR HANDLING

When inserting tester probes into a connector, insert them from the rear of the connector. When necessary, use mini test leads. For water resistant connectors which cannot be accessed from behind, take good care not to deform the connector terminals.

Fig. 1

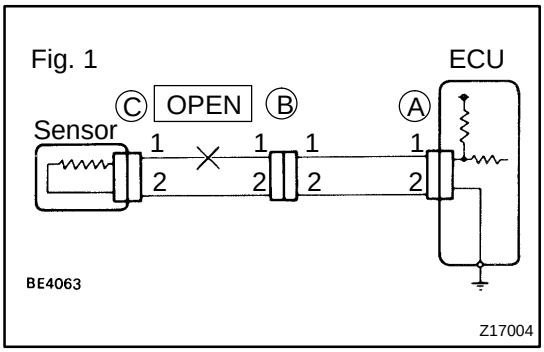

6. CHECK OPEN CIRCUIT

For the open circuit in the wire harness in Fig. 1, perform "(a) Continuity Check" or "(b) Voltage Check" to locate the section.

Fig. 2

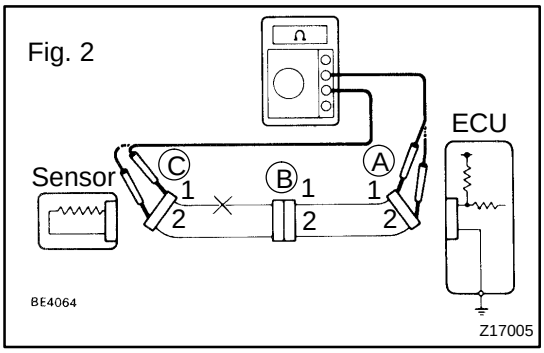

(a) Check the continuity.

(1) Disconnect connectors "A" and "C" and measure the resistance between them.

In the case of Fig. 2,

Between terminal 1 of connector "A" and terminal 1 of connector "C" → No continuity (open)

Between terminal 2 of connector "A" and terminal 2 of connector "C" → Continuity

Therefore, it is found out that there is an open circuit between terminal 1 of connector "A" and terminal 1 of connector "C".

Fig. 3

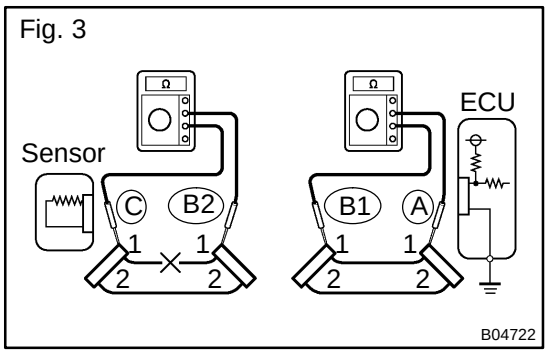

(2) Disconnect connector "B" and measure the resistance between the connectors.

In the case of Fig. 3,

Between terminal 1 of connector "A" and terminal 1 of connector "B1" → Continuity

Between terminal 1 of connector "B2" and terminal 1 of connector "C" → No continuity (open)

Therefore, it is found out that there is an open circuit between terminal 1 of connector "B2" and terminal 1 of connector "C".

Fig. 4

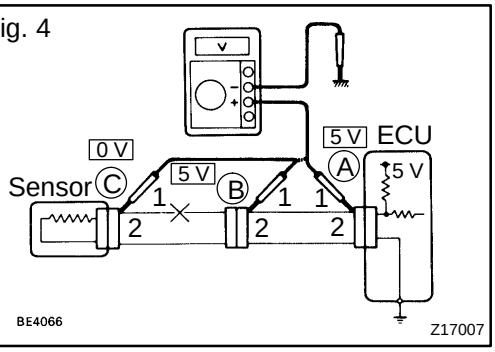

(b) Check the voltage.

In a circuit in which voltage is applied (to the ECU connector terminal), an open circuit can be checked for by conducting a voltage check.

As shown in Fig. 4, with each connector still connected, measure the voltage between body ground and terminal 1 of connector "A" at the ECU 5V output terminal, terminal 1 of connector "B", and terminal 1 of connector "C", in that order.

If the results are:

5V: Between Terminal 1 of connector "A" and Body Ground
5V: Between Terminal 1 of connector "B" and Body Ground
0V: Between Terminal 1 of connector "C" and Body Ground

Then it is found out that there is an open circuit in the wire harness between terminal 1 of "B" and terminal 1 of "C".

Fig. 5

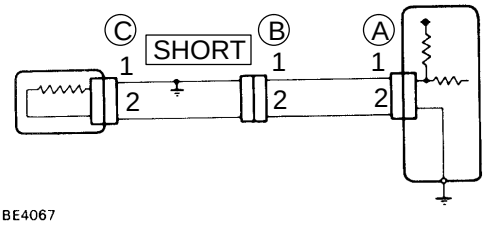

7. CHECK SHORT CIRCUIT

If the wire harness is ground shorted as in Fig. 5, locate the section by conducting a "continuity check with ground".

Fig. 6

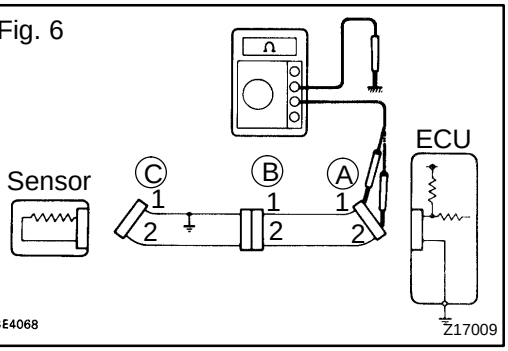

Check the continuity with ground.

(1) Disconnect connectors "A" and "C" and measure the resistance between terminal 1 and 2 of connector "A" and body ground.

In the case of Fig. 6

Between terminal 1 of connector "A" and body ground → Continuity (short)

Between terminal 2 of connector "A" and body ground → No continuity

Therefore, it is found out that there is a short circuit between terminal 1 of connector "A" and terminal 1 of connector "C".

Fig. 7

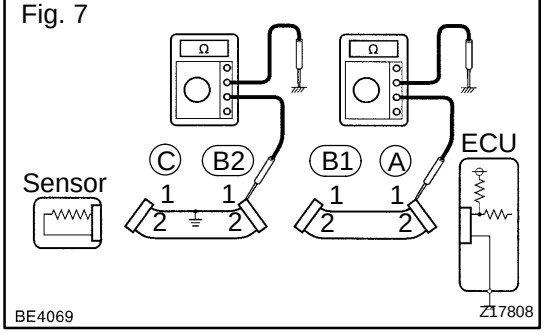

(2) Disconnect connector ”B” and measure the resistance between terminal 1 of connector ”A” and body ground, and terminal 1 of connector ”B2” and body ground.
Between terminal 1 of connector ”A” and body ground → No continuity
Between terminal 1 of connector ”B2” and body ground → Continuity (short)
Therefore, it is found out that there is a short circuit between terminal 1 of connector ”B2” and terminal 1 of connector ”C”.

8. CHECK AND REPLACE ECU

First check the ECU ground circuit. If it is faulty, repair it. If it is normal, the ECU could be faulty, so replace the ECU with a normal functioning one and check that the symptoms appear.

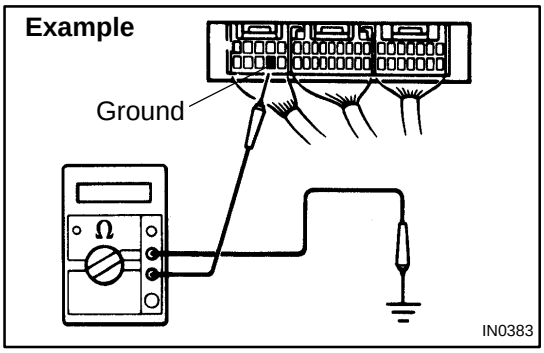

(1) Measure the resistance between the ECU ground terminal and the body ground.

Resistance: 1 Ω or less

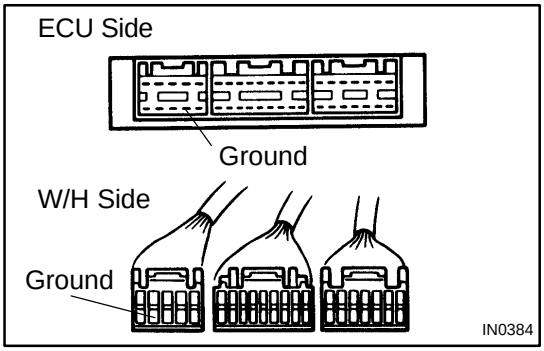

(2) Disconnect the ECU connector, check the ground terminals on the ECU side and the wire harness side for bend and check the contact pressure.

SR0JY-02

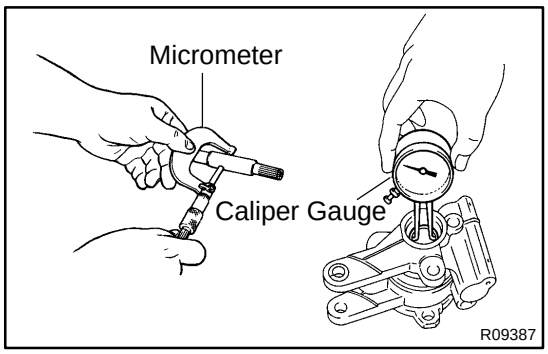

INSPECTION

NOTICE:

When using a vise, do not overtighten it.

1. MEASURE OIL CLEARANCE BETWEEN VANE PUMP SHAFT AND BUSHING

Using a micrometer and a caliper gauge, measure the oil clearance.

Standard clearance:
0.01 - 0.03 mm (0.0004 - 0.0012 in.)
Maximum clearance: 0.07 mm (0.0028 in.)

If it is more than maximum, replace the front housing and vane pump shaft.

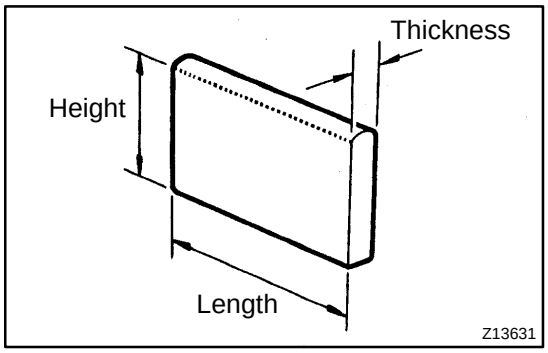

2. INSPECT VANE PUMP ROTOR AND VANE PLATES

(a) Using a micrometer, measure the height, thickness and length of the 10 plates.

Minimum height: 8.1 mm (0.319 in.)
Minimum thickness: 1.797 mm (0.0707 in.)
Minimum length: 14.988 mm (0.5901 in.)

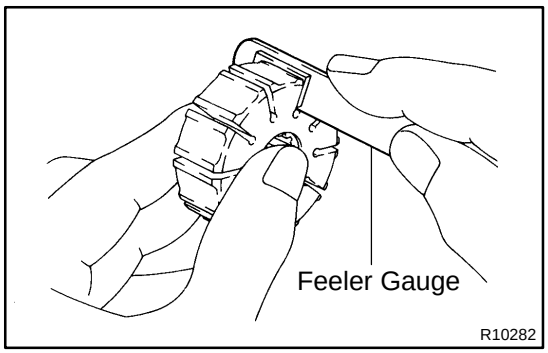

(b) Using a feeler gauge, measure the clearance between the rotor groove and plate.

Maximum clearance: 0.03 mm (0.0012 in.)

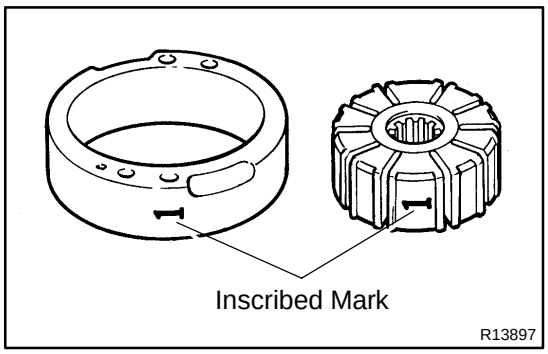

If it is more than maximum, replace the plate and/or rotor with one having the same mark stamped on the cam ring.

Inscribed mark: 1, 2, 3, 4 or None

HINT:

There are 5 vane plate lengths with the following rotor and cam ring marks:

Rotor and cam ring mark	Vane plate part number	Vane plate length mm (in.)
None	44345-12010	14.996-14.998 (0.59039-0.59047)
1	44345-12020	14.994-14.996 (0.59031-0.59039)
2	44345-12030	14.992-14.994 (0.59024-0.59031)
3	44345-12040	14.990-14.992 (0.59016-0.59024)
4	44345-12050	14.988-14.990 (0.59008-0.59016)

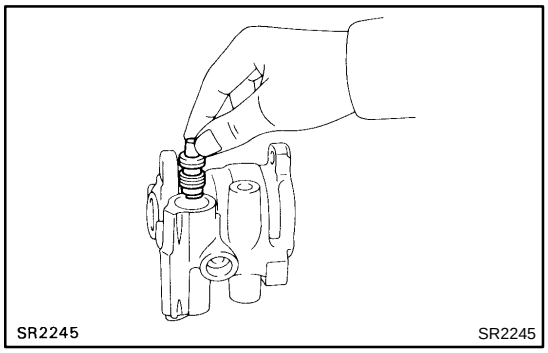

3. INSPECT FLOW CONTROL VALVE

(a) Coat the valve with power steering fluid and check that it falls smoothly into the valve hole by its own weight.

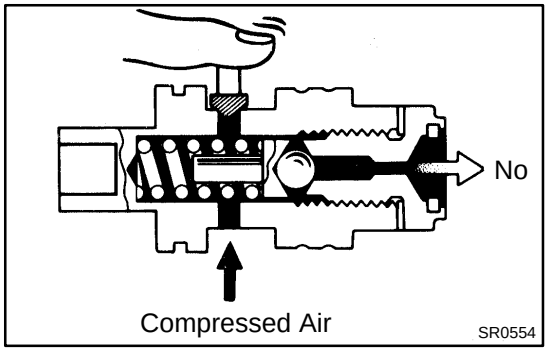

(b) Check the flow control valve for leakage.
Close one of the holes and apply 392-490 kPa (4-5 kgf/cm^2, 57-71 psi) of compressed air into the opposite side, and confirm that air does not come out from the end hole.

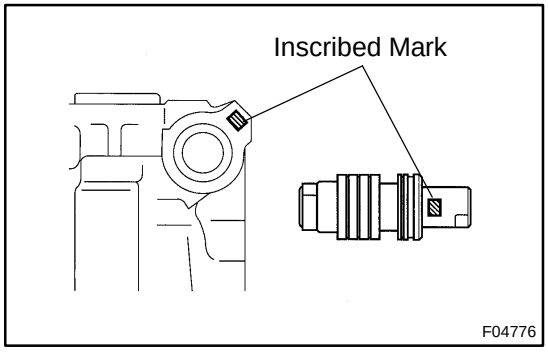

If necessary, replace the valve with one having the same letter as inscribed on the front housing.

Inscribed mark: A, B, C, D, E or F

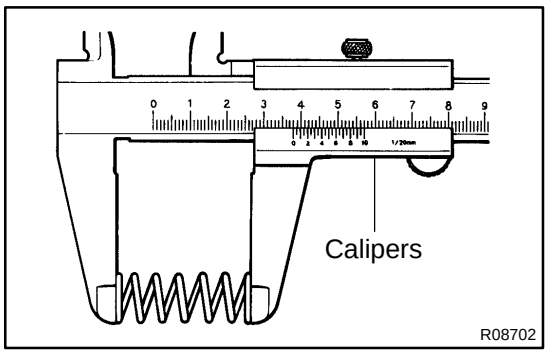

4. INSPECT SPRING

Using calipers, measure the free length of the spring.

Minimum free length: 36.0 mm (1.42 in.)

If it is not within the specification, replace the spring.

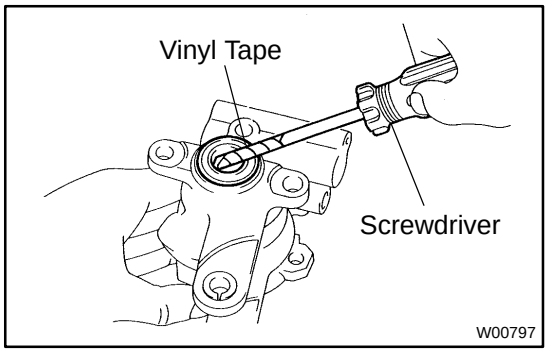

5. IF NECESSARY, REPLACE OIL SEAL

(a) Using a screwdriver, pry out the oil seal.

HINT:

Tape the screwdriver tip before use.

NOTICE:

Be careful not to damage the front housing.

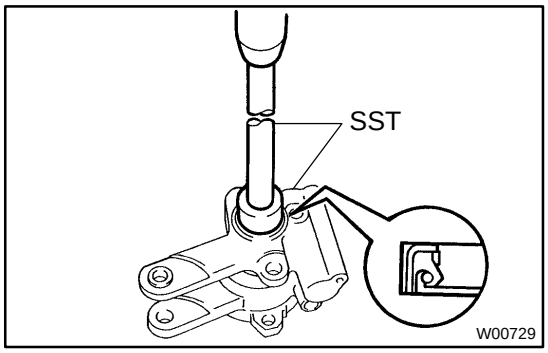

(b) Coat a new oil seal lip with power steering fluid.

(c) Using SST, press in the oil seal.

SST 09950-60010 (09951-00230),
09950-70010 (09951-07100)

NOTICE:

Make sure you install the oil seal facing the correct direction.

SR0JS-03

INSPECTION

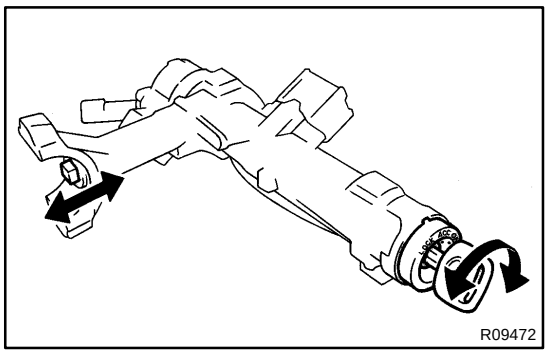

NOTICE:

When using a vise, do not overtighten it.

1. INSPECT STEERING LOCK OPERATION

Check that the steering lock mechanism operates properly.

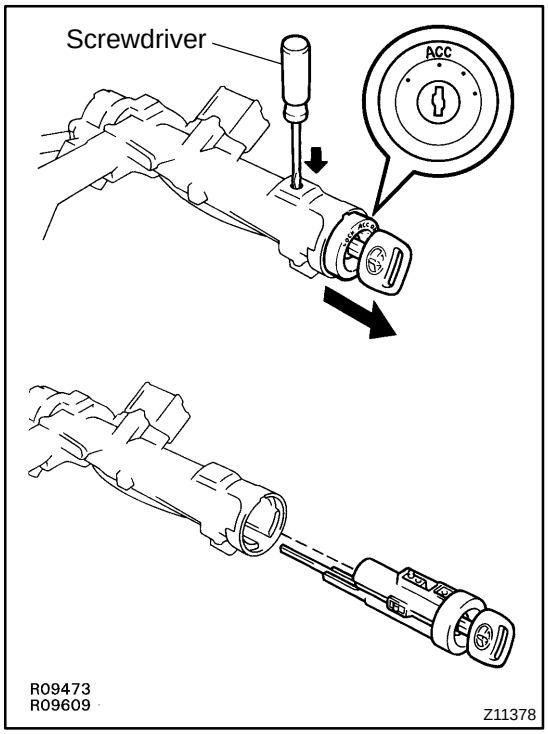

2. IF NECESSARY, REPLACE KEY CYLINDER

(a) Place the ignition key at the ACC position.

(b) Push down the stop pin with a screwdriver, and pull out the cylinder.

(c) Install a new cylinder.

HINT:

Make sure the ignition key is at the ACC position.

3. INSPECT KEY UNLOCK WARNING SWITCH

(See page BE-12)

4. IF NECESSARY, REPLACE KEY UNLOCK WARNING SWITCH

(a) Remove the 2 screws.

(b) Install a new switch with the 2 screws.

5. (A/T)

INSPECT KEY INTERLOCK SOLENOID

(A140E: See page AX-12)

(A246E: See page AX-11)

6. (A/T)

IF NECESSARY, REPLACE KEY INTERLOCK SOLENOID

(a) Remove the 2 screws.

(b) Install a new solenoid with the 2 screws.

7. INSPECT IGNITION SWITCH

(See page BE-12)

8. IF NECESSARY, REPLACE IGNITION SWITCH

(a) Remove the 2 screws.

(b) Install a new switch with the 2 screws.

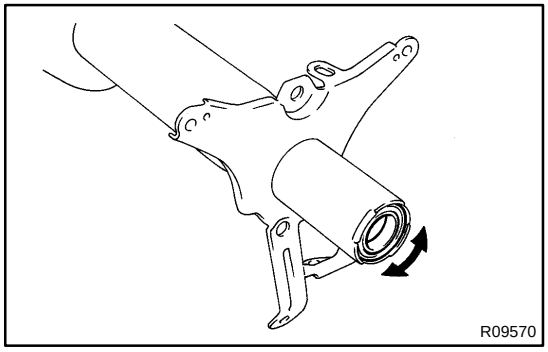

9. INSPECT BEARING

Check the bearing rotation condition and check for abnormal noise.

If the bearing is worn or damaged, replace the column upper tube.

HEATED OXYGEN SENSOR

SF1C7-01

COMPONENTS

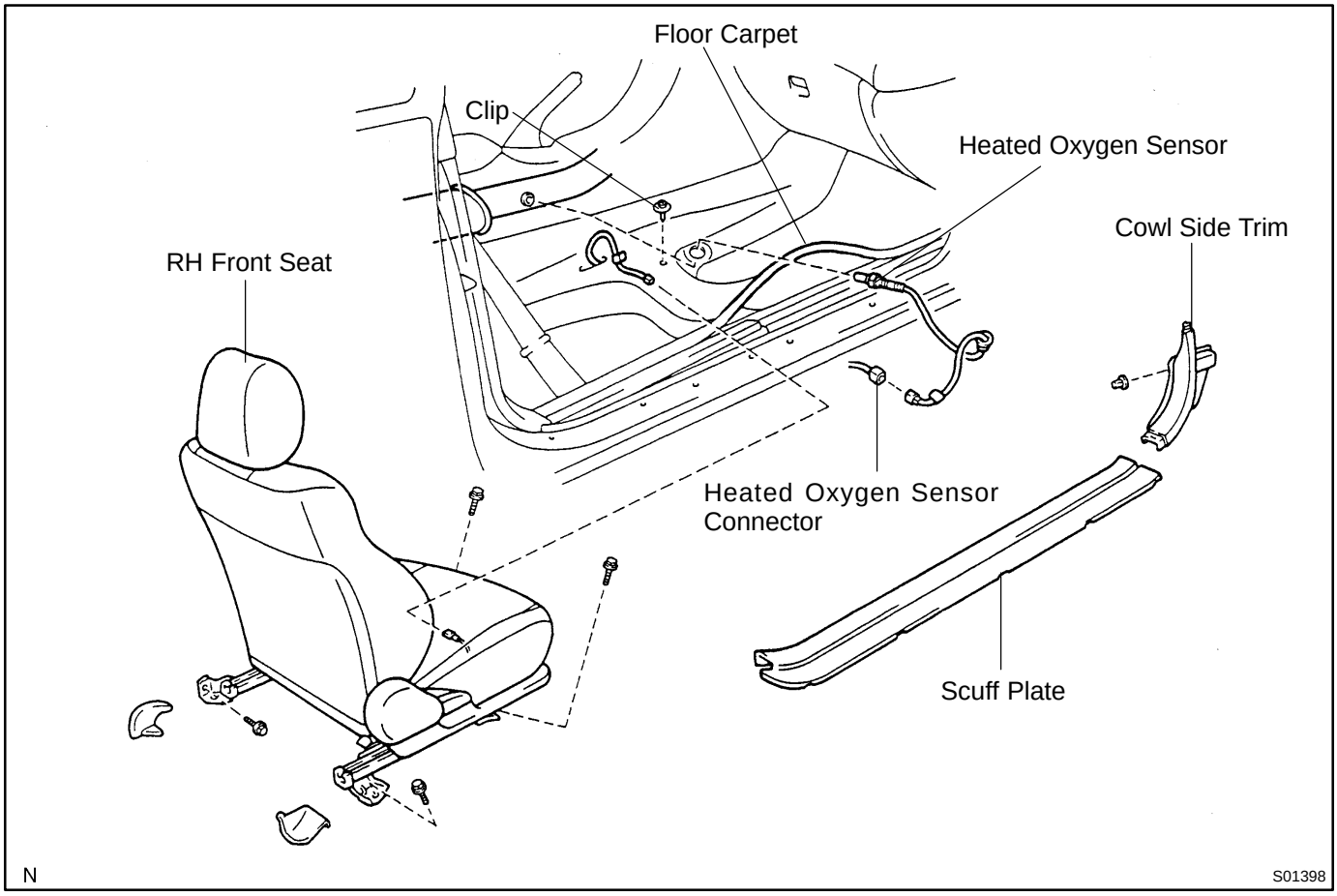

SF1BZ-02

INSPECTION

1. INSPECT INJECTOR INJECTION

CAUTION:

Keep injector clean of sparks during the test.

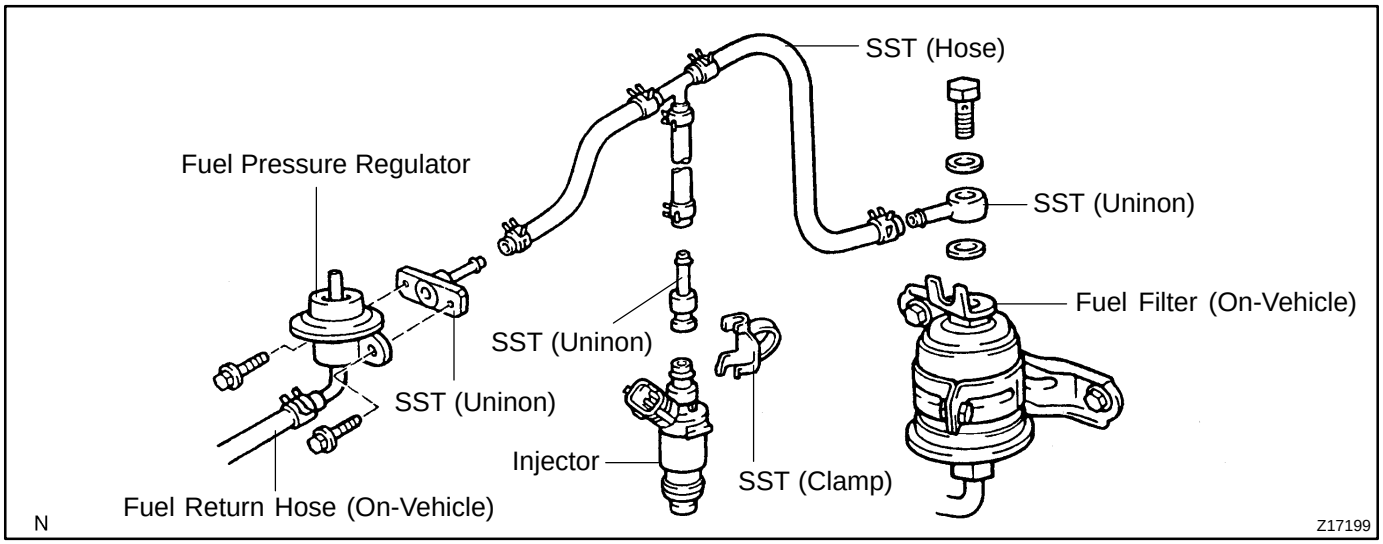

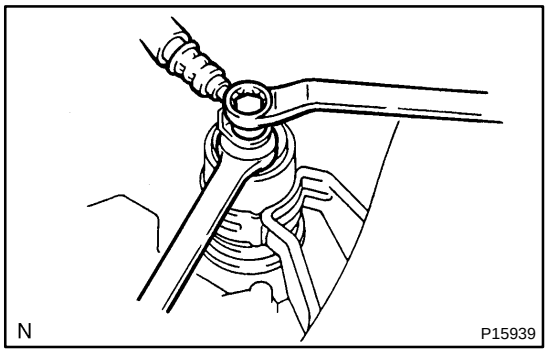

(a) Remove the union bolt and 2 gaskets, and disconnect the fuel inlet hose from the fuel filter outlet.

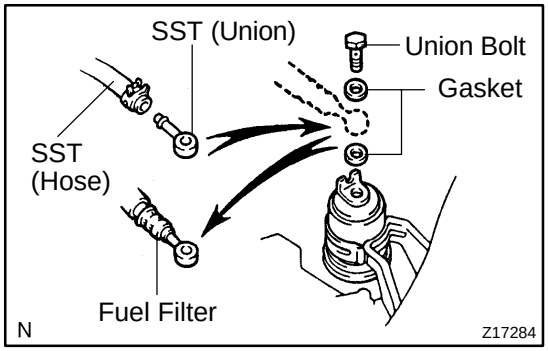

(b) Connect SST (union and hose) to the fuel filter outlet with the 2 gaskets and union bolts.
SST 09268-41046 (90405-09015)
Torque: 30 N·m (300 kgf·cm, 22 ft·lbf)

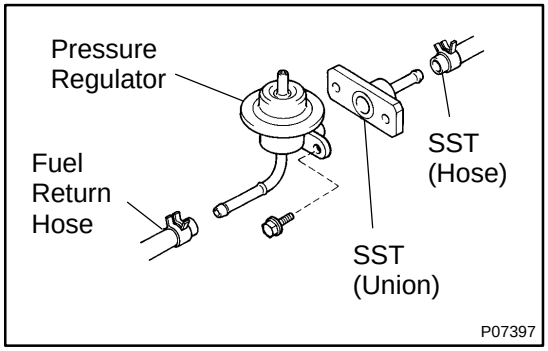

(c) Remove the pressure regulator from the delivery pipe.
(d) Install a O-ring to the fuel inlet of pressure regulator.
(e) Connect SST (hose) to the fuel inlet of the pressure regulator with SST (union) and the 2 bolts.
SST 09268-41046 (09268-41091)
Torque: 9.3 N·m (95 kgf·cm, 82 in.·lbf)
(f) Connect the fuel return hose to the fuel outlet of the pressure regulator.

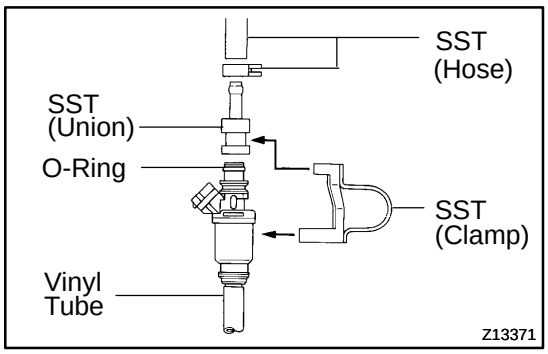

(g) Install the grommet and O-ring to the injector.
(h) Connect SST (union and hose) to the injector, and hold the injector and union with SST (clamp).
SST 09268-41045
(i) Put the injector into the graduated cylinder.

CAUTION:
Install a suitable vinyl hose onto the injector to prevent gasoline from splashing out.

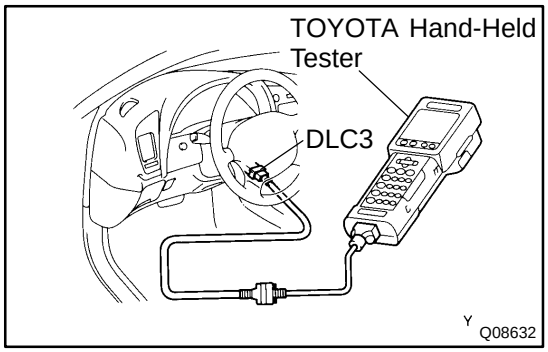

(j) Connect the TOYOTA hand-held tester to the DLC3.
(k) Turn the ignition switch ON and TOYOTA hand-held tester main switch ON.

NOTICE:
Do not start the engine.

(l) Select the active test mode on the TOYOTA hand-held tester.
(m) Please refer to the TOYOTA hand-held tester operator's manual for further details.
(n) If you have no TOYOTA hand-held tester, connect the positive (+) and negative (-) leads from the battery to the fuel pump connector (See page SF-5).
(o) Connect the battery negative (-) cable to the battery.
(p) Turn the ignition switch ON.

NOTICE:
Do not start the engine.

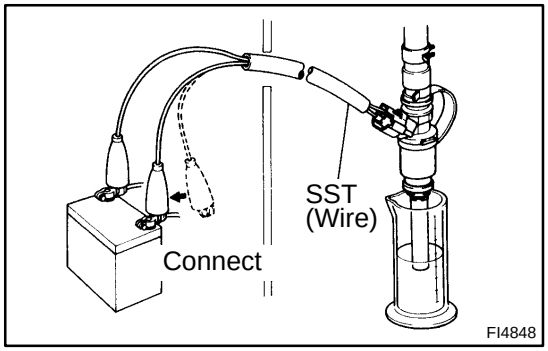

(q) Connect SST (wire) to the injector and battery for 15 seconds, and measure the injection volume with a graduated cylinder. Test each injector 2 or 3 times.
SST 09842-30070
Volume: 39 - 49 cm^3 (2.3 - 3.0 cu in.) per 15 seconds
Difference between each injector:
5 cm^3 (0.3 cu in.) or less

If the injection volume is not as specified, replace the injector.

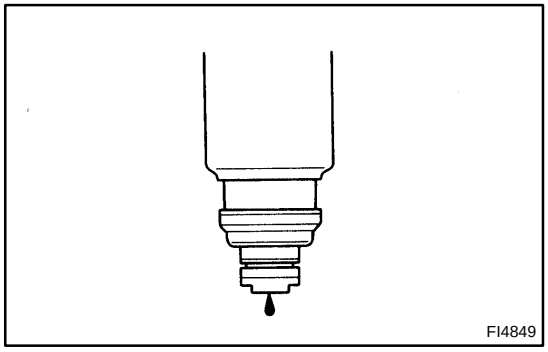

2. INSPECT LEAKAGE

(a) In the condition above, disconnect the tester probes of SST (wire) from the battery and check the fuel leakage from the injector.
SST 09842-30070
Fuel drop: One drop or less per minute
(b) Turn the ignition switch OFF.
(c) Disconnect the negative (-) terminal cable from the battery.
(d) Remove the SST.

SST 09268-41046, 09842-30070

(e) Reconnect the fuel inlet hose to the fuel filter outlet with 2 new gaskets and the union bolt.
Torque: 30 N·m (300 kgf·cm, 22 ft·lbf)

SF1C2-02

INSPECTION

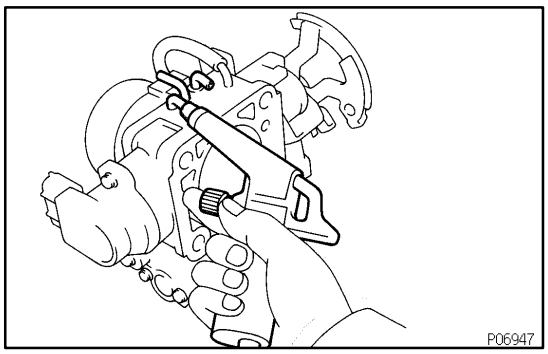

1. CLEAN THROTTLE BODY

(a) Using a soft brush and carburetor cleaner, clean the cast parts.

(b) Using compressed air, clean all the passages and apertures.

NOTICE:

To prevent deterioration, do not clean the throttle position sensor.

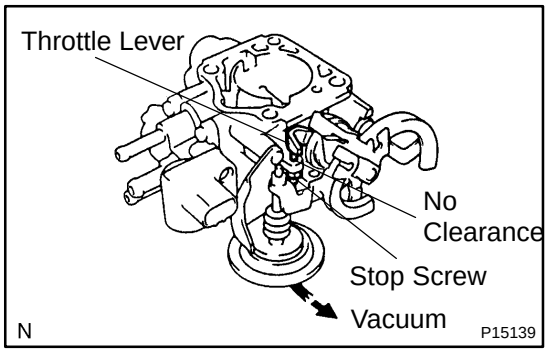

2. INSPECT THROTTLE VALVE

(a) Apply vacuum to the throttle opener.

(b) Check that there is no clearance between the throttle stop screw and throttle lever when the throttle valve is fully closed.

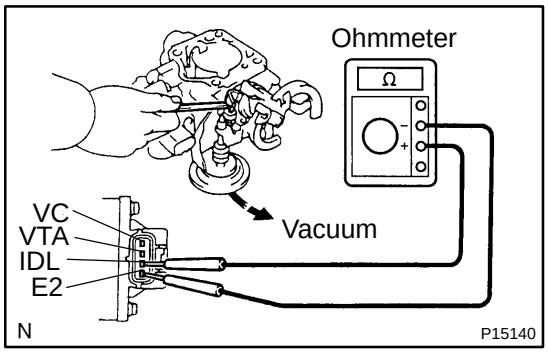

3. INSPECT THROTTLE POSITION SENSOR

(a) Apply vacuum to the throttle opener.

(b) Insert a feeler gauge between the throttle stop screw and stop lever.

(c) Using an ohmmeter, measure the resistance between each terminal.

Clearance between lever and stop screw	Between terminals	Resistance
0 mm (0 in.)	VTA - E2	0.2 - 5.7 kΩ
0.40 mm (0.016 in.)	IDL - E2	2.3 kΩ or less
0.90 mm (0.035 in.)	IDL - E2	Infinity
Throttle valve fully open	VTA - E2	2.0 - 10.2 kΩ
-	VC - E2	2.5 - 5.9 kΩ

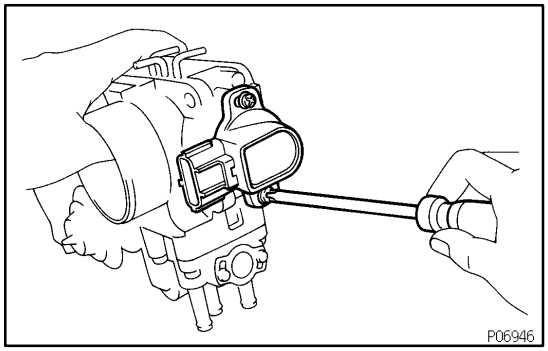

4. IF NECESSARY, ADJUST THROTTLE POSITION SENSOR

(a) Loosen the 2 set screws of the sensor.

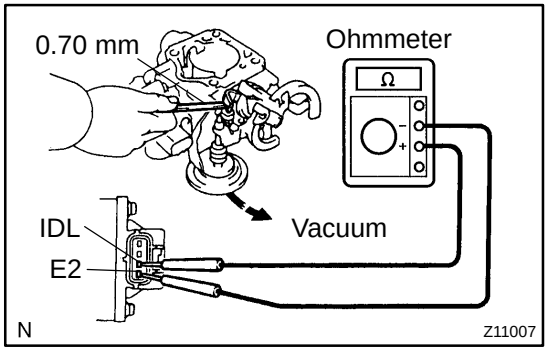

(b) Apply vacuum to the throttle opener.

(c) Insert a 0.70 mm (0.028 in.) feeler gauge between the throttle stop screw and stop lever.

(d) Connect the tester probe of an ohmmeter to the terminals IDL and E2 of the sensor.

(e) Gradually turn the sensor clockwise until the ohmmeter deflects, and secure it with the 2 set screws.

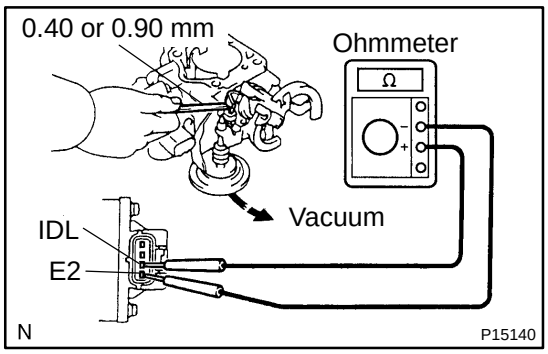

(f) Recheck the continuity between terminals IDL and E2.

Clearance between lever and stop screw	Continuity (IDL - E2)
0.40 mm (0.016 in.)	Continuity
0.90 mm (0.035 in.)	No continuity

AX0R9-02

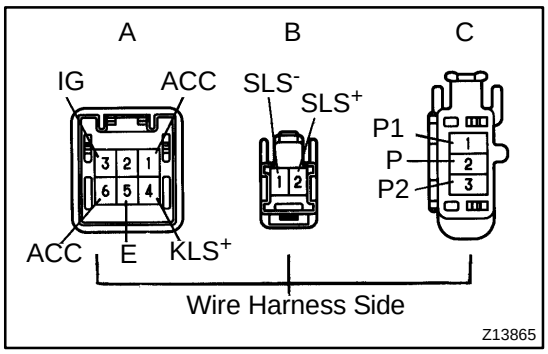

INSPECTION

1. INSPECT SHIFT LOCK CONTROL ECU

Using a voltmeter, measure the voltage at each terminals.

HINT:

Do not disconnect the ECU connector.

Terminal	Measuring Condition	Voltage (V)
A, 1 - A, 5 (ACC - E)	IG SW ACC	10 - 14
A, 3 - A, 5 (IG - E)	IG SW ON	10 - 14
A, 6 - A, 5 (STP - E)	Depress brake pedal	10 - 14
A, 4 - A, 5 (KLS^+ - E)	(1) IG SW ACC and shift lever P position	0
	(2) IG SW ACC and shift lever R, N, D, 2, L position	10 - 14
	(3) (After approx. 1 second)	6 - 9
B, 2 - B, 1 (SLS^+ - SLS^-)	(1) IG SW ON and shift lever P position	0
	(2) Depress brake pedal	8.5 - 13.5
	(3) Shift lever R, N, D, 2, L position	0
C, 1 - C, 2 (P1 - P)	(1) IG SW ON and shift lever P position and depress brake pedal	0
	(2) Shift lever R, N, D, 2, L position	9 - 13.5
C, 3 - C, 2 (P2 - P)	(1) IG SW ACC and shift lever P position	9 - 13.5
	(2) Shift lever R, N, D, 2, L position	0

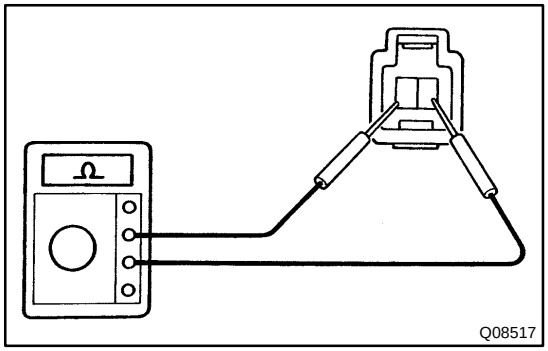

2. INSPECT SHIFT LOCK SOLENOID

(a) Disconnect the solenoid connector.

(b) Using an ohmmeter, measure the resistance between the terminals.

Standard resistance: 30 - 37 Ω

If the resistance value is not as specified, replace the solenoid.

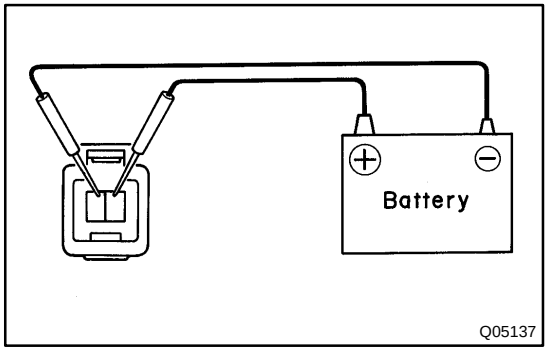

(c) Apply battery positive voltage between terminals. Check that the solenoid can be heard operating.

If the operation is not as specified, replace the solenoid.

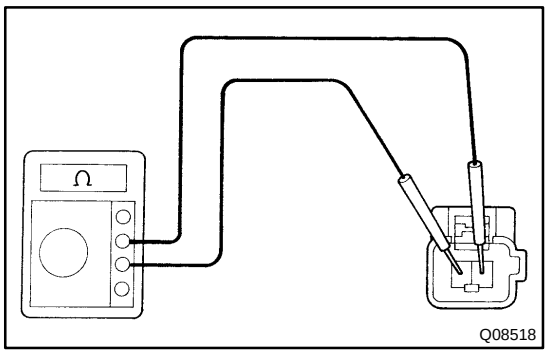

3. INSPECT KEY INTERLOCK SOLENOID

(a) Disconnect the solenoid connector.

(b) Using an ohmmeter, measure the resistance between the terminals.

Standard resistance: 12.5 - 16.5 Ω

If resistance value is not as specified, replace the solenoid.

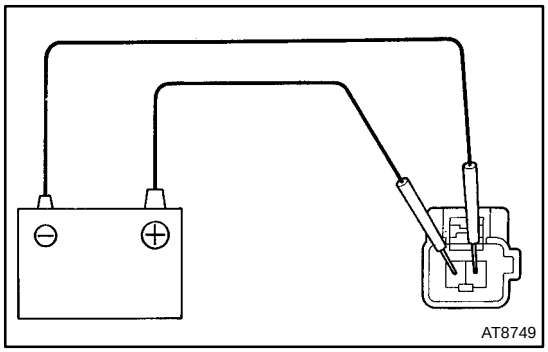

(c) Apply the battery positive voltage between the terminals. Check that an operation noise can be heard from the solenoid.

If the solenoid does not operated, replace the solenoid.

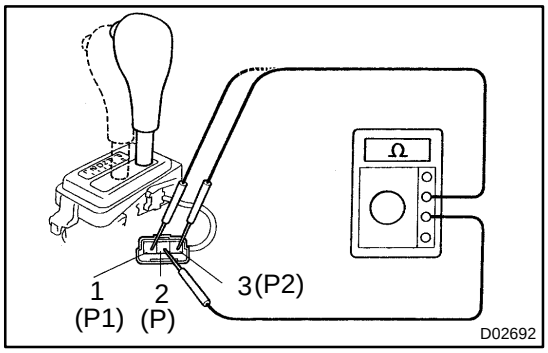

4. INSPECT SHIFT LOCK CONTROL SWITCH

Inspect that continuity exists between each terminal.

Shift position	Tester connection	Specified value
P position (Release button is not pushed)	2 - 1 (P - P1)	Continuity
P position (Release button is pushed)	2 - 1 (P - P1) 2 - 3 (P - P2)	Continuity
R, N, D, 2, L position	2 - 3 (P - P2)	Continuity

If the continuity is not as specified, replace the switch.

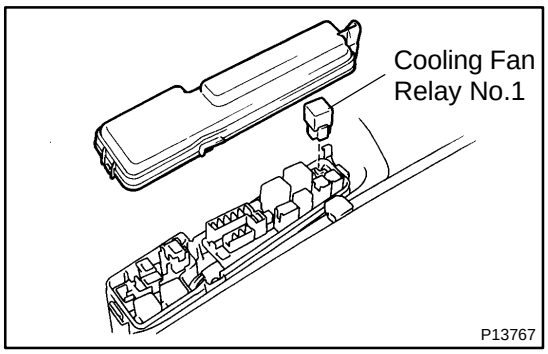

COOLING FAN RELAY

AC1GZ-01

INSPECTION

1. REMOVE COOLING FAN RELAY FROM JUNCTION AND RELAY BLOCK NO.2

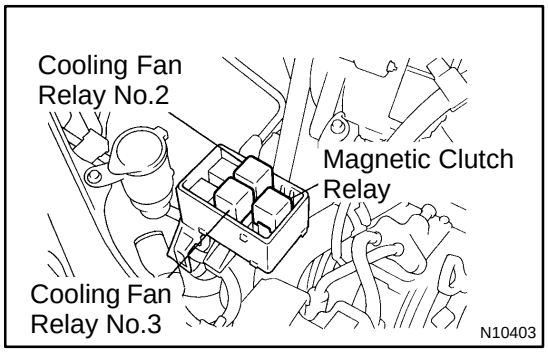

2. REMOVE COOLING FAN RELAY NO.2 FROM RELAY BLOCK NO.5

3. REMOVE COOLING FAN RELAY NO.3 FROM RELAY BLOCK NO.5

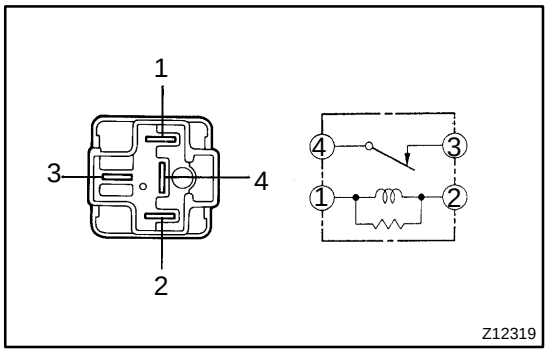

4. INSPECT COOLING FAN RELAY NO.1 CONTINUITY

Condition	Tester connection	Specified condition
Constant	1 - 2 3 - 4	Continuity
Apply B+ between terminals 1 and 3.	3 - 4	No continuity

If continuity is not as specified, replace the relay.

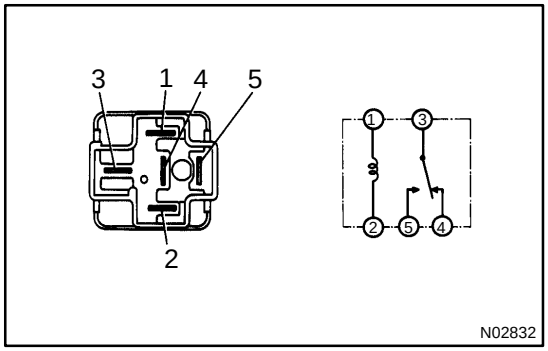

5. INSPECT COOLING FAN RELAY NO.2 CONTINUITY

Condition	Tester connection	Specified condition
Constant	1 - 2 4 - 5	Continuity
Apply B+ between terminals 1 and 2.	3 - 5	Continuity

If continuity is not as specified, replace the relay.

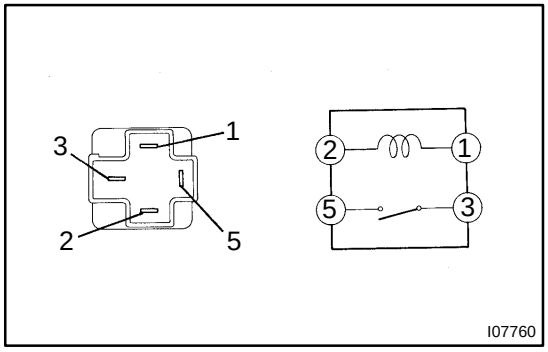

6. INSPECT COOLING FAN RELAY NO.3 CONTINUITY

Condition	Tester connection	Specified condition
Constant	1 - 2	Continuity
Apply B+ between terminals 1 and 2.	3 - 5	Continuity

If continuity is not as specified, replace the relay.

SA12V-01

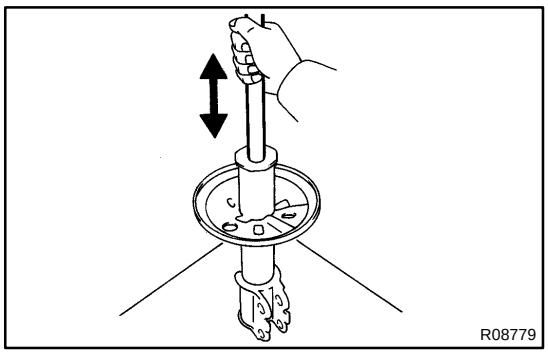

INSPECTION

INSPECT SHOCK ABSORBER

Compress and extend the shock absorber rod and check that there is no abnormal resistance or unusual operation sound.
If there is any abnormality, replace the shock absorber with a new one.

NOTICE:

When discarding the shock absorber, see DISPOSAL on page SA-39 .

FRONT WHEEL HUB BOLT

SA12M-01

REPLACEMENT

1. REMOVE FRONT WHEEL

2. REMOVE BRAKE CALIPER AND DISC

(a) Remove the 2 bolts, brake caliper and disc.

(b) Support the brake caliper securely.

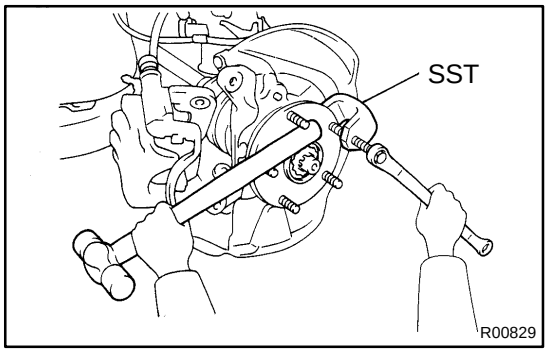

3. REMOVE HUB BOLT

Using SST, remove the hub bolt.

SST 09628-1001 1

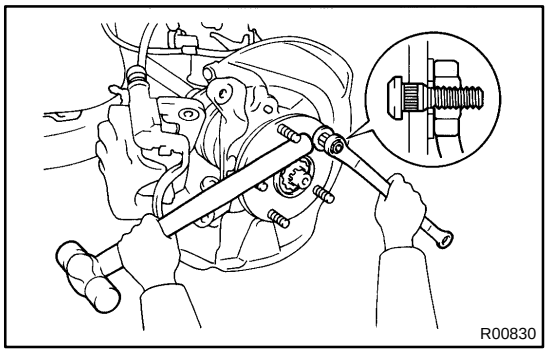

4. INSTALL HUB BOLT

Install a washer and nut to the hub bolt, as shown in the illustration, and install the hub bolt while torquing the nut.

5. INSTALL DISC AND BRAKE CALIPER

Install the disc and brake caliper with 2 bolts.

Torque: 103 N·m (1,050 kgf·cm, 76 ft·lbf)

6. INSTALL FRONT WHEEL

Torque: 103 N·m (1,050 kgf·cm, 76 ft·lbf)

RS0PN-01

INSPECTION

1. VEHICLE NOT INVOLVED IN COLLISION

(a) Do a diagnostic system check (See page DI-346).

(b) Do a visual check which includes the following items with the steering wheel pad (with airbag) installed in the vehicle.

Check for cuts, minute cracks or marked discoloration of the steering wheel pad top surface and grooved portion.

2. VEHICLE INVOLVED IN COLLISION AND AIRBAG IS NOT DEPLOYED

(a) Do a diagnostic system check (See page DI-346).

(b) Do a visual check which includes the following items with the steering wheel pad (with airbag) installed in the vehicle.

- Check for cuts and cracks in, or marked discoloration of the steering wheel pad top surface and grooved portion.
- Check for cuts and cracks in wire harnesses, and for chipping in connectors.
- Check for deformation of the horn button contact plate of the steering wheel.

HINT:

- If the horn button contact plate of the steering wheel is deformed, never repair it. Always replace the steering wheel assembly with a new one.
- There should be no interference between the steering wheel pad and the steering wheel, and the clearance should be uniform all the way around when the new steering wheel pad is installed on the steering wheel.

CAUTION:

For removal and installation of the steering wheel pad, see page SR-12 and SR-17 , and be sure to follow the correct procedure.

3. VEHICLE INVOLVED IN COLLISION AND AIRBAG IS DEPLOYED

(a) Do diagnostic system check (See page DI-346).

(b) Do a visual check which includes the following items with the steering wheel pad (with airbag) removed from the vehicle.

- Check for deformation of the horn button contact plate of the steering wheel.
- Check for damage to the spiral cable connector and wire harness.

HINT:

- If the horn button contact plate of the steering wheel is deformed, never repair it. Always replace the steering wheel assembly with a new one.
- There should be no interference between the steering wheel pad and the steering wheel, and the clearance should be uniform all the way around when the new steering wheel pad is installed on the steering wheel.

BE0OQ-01

INSPECTION

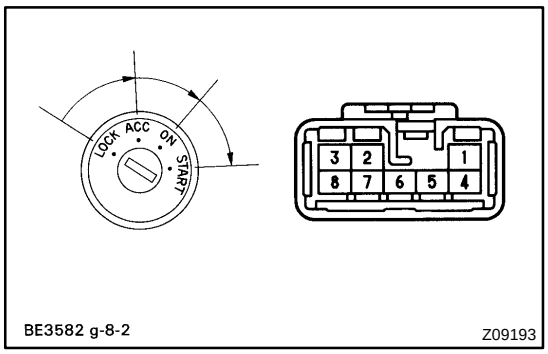

1. INSPECT IGNITION SWITCH CONTINUITY

Switch position	Tester connection	Specified condition
LOCK	-	No continuity
ACC	5 - 7	Continuity
ON	4 - 5 - 7 2 - 3	Continuity
START	4 - 7 - 8 1 - 2 - 3	Continuity

If continuity is not as specified, replace the switch.

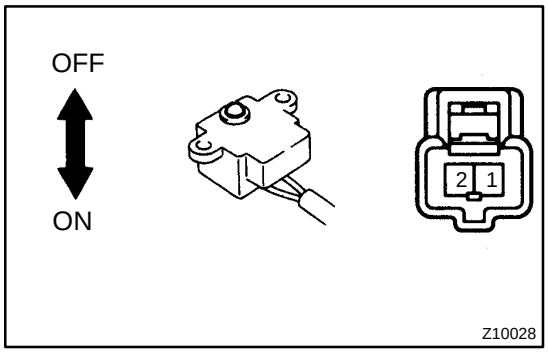

2. INSPECT KEY UNLOCK WARNING SWITCH CONTINUITY

Condition	Tester connection	Specified condition
Switch OFF (Key removed)	-	No continuity
Switch ON (Key set)	1 - 2	Continuity

If continuity is not as specified, replace the switch.

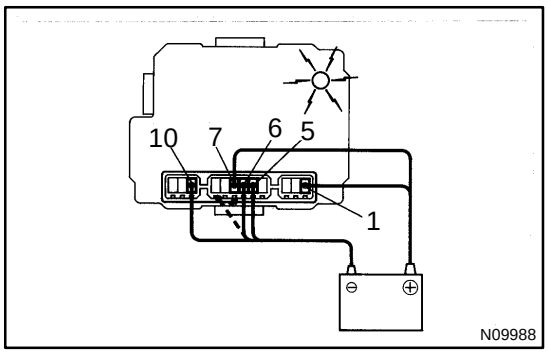

3. INSPECT KEY UNLOCK WARNING OPERATION : INSPECT INTEGRATION RELAY

(a) Connect the positive (+) lead from the battery to terminals 1 and 7, the negative lead to terminals 5 and 10.

(b) Check that the buzzer sounds when the negative (-) lead from the battery is connected to terminal 6.

If operation is not as specified, replace the relay.

SF0VO-02

INSPECTION

1. REMOVE CIRCUIT OPENING RELAY

2. INSPECT RELAY CONTINUITY

(a) Using and ohmmeter, check that there is continuity between terminals STA and E1.

If there is no continuity, replace the relay.

(b) Check that there is continuity between terminals +B and FC.

If there is no continuity, replace the relay.

(c) Check that there is no continuity between terminals +B and FP.

If there is continuity, replace the relay.

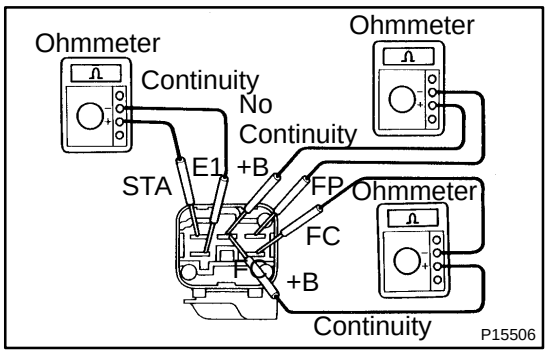

3. INSPECT RELAY OPERATION

(a) Apply battery voltage across terminals STA and E1.

(b) Using an ohmmeter, check that there is continuity between terminals +B and FP.

If there is no continuity, replace the relay.

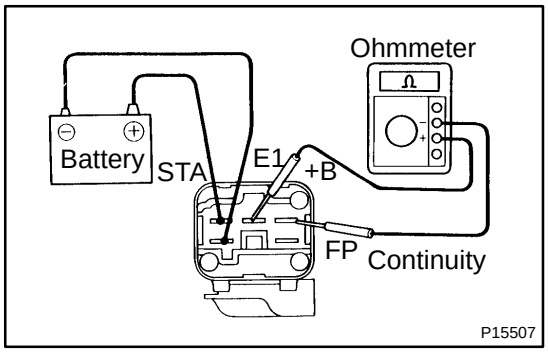

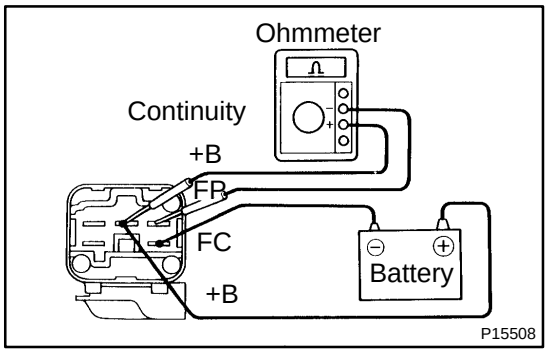

(c) Apply battery voltage across terminals +B and FC.

(d) Check that there is continuity between terminals +B and FP.

If there is no continuity, replace the relay.

4. REINSTALL CIRCUIT OPENING RELAY

CO/HC

INSPECTION

EM07X-07

HINT:

This check is used only to determine whether or not the idle CO/HC complies with regulations.

1. INITIAL CONDITIONS

(a) Engine at normal operating temperature
(b) Air cleaner installed
(c) All pipes and hoses of air induction system connected
(d) All accessories switched OFF
(e) All vacuum lines properly connected

HINT:

All vacuum hoses for EGR system, etc. should be properly connected.

(f) SFI system wiring connectors fully plugged
(g) Ignition timing checked correctly
(h) Transmission in neutral position
(i) Tachometer and CO/HC meter calibrated by hand

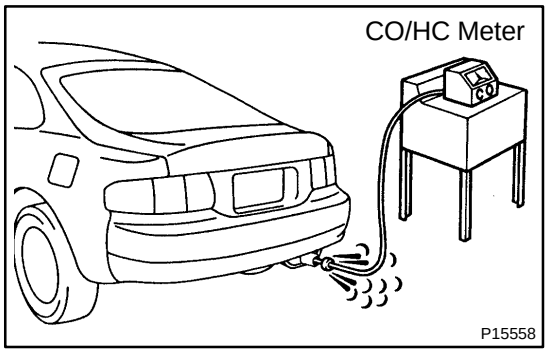

2. START ENGINE

3. RACE ENGINE AT 2,500 RPM FOR APPROX. 180 SECONDS

4. INSERT CO/HC METER TESTING PROBE AT LEAST 40 cm (1.3 ft) INTO TAILPIPE DURING IDLING

5. IMMEDIATELY CHECK CO/HC CONCENTRATION AT IDLE AND/OR 2,500 RPM

Complete the measuring within 3 minutes.

HINT:

When performing the 2 mode (2,500 rpm and idle) test, follow the measurement order prescribed by the applicable local regulations.

If the CO/HC concentration does not comply with regulations, troubleshoot in the order given below.

(1) Check oxygen sensor operation.
(See page LU-19)

(2) See the table below for possible causes, then inspect and correct the applicable causes if necessary.

CO	HC	Symptom	Causes
Normal	High	Rough idle	3. Faulty ignitions: • Incorrect timing • Fouled, shorted or improperly gapped plugs • Open or crossed high-tension cords 4. Incorrect valve clearance 5. Leaky EGR valve 6. Leaky intake and exhaust valves 7. Leaky cylinder
Low	High	Rough idle (Fluctuating HC reading)	1. Vacuum leaks: • PCV hose • EGR valve • Intake manifold • Throttle body • IAC valve • Brake booster line 2. Lean mixture causing misfire
High	High	Rough idle (Black smoke from exhaust)	1. Restricted air filter 2. Faulty SFI system • Faulty pressure regulator • Clogged fuel return line • Defective ECT sensor • Defective IAT sensor • Faulty ECM • Faulty injector • Faulty throttle position sensor • MAP sensor

COOLANT

CO0G7-01

INSPECTION

HINT:

Check the coolant level when the engine is cold.

1. CHECK ENGINE COOLANT LEVEL AT RADIATOR RESERVOIR

The engine coolant level should be between the ”LOW” and ”FULL” lines.

If low, check for leaks and add engine coolant up to the ”FULL” line.

2. CHECK ENGINE COOLANT QUALITY

(a) Remove the radiator cap.

CAUTION:

To avoid the danger of being burned, do not remove the radiator cap while the engine and radiator are still hot, as fluid and steam can be blown out under pressure.

(b) There should not be any excessive deposits of rust or scale around the radiator cap or radiator filler hole, and the coolant should be free from oil.

If excessively dirty, replace the coolant.

(c) Reinstall the radiator cap.

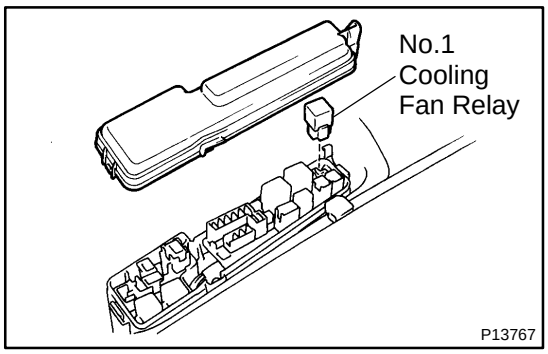

COOLING FAN RELAY

CO0GW-03

INSPECTION

1. INSPECT NO.1 COOLING FAN RELAY

(a) Remove the relay box cover.

(b) Remove the No.1 cooling fan relay. (Marking: FAN NO.1)

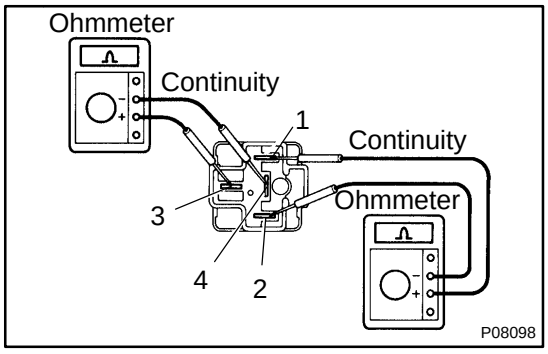

(c) Inspect the cooling fan relay continuity.

(1) Using an ohmmeter, check that there is continuity between terminals 1 and 2.

If there is no continuity, replace the relay.

(2) Check that there is continuity between terminals 3 and 4.

If there is no continuity, replace the relay.

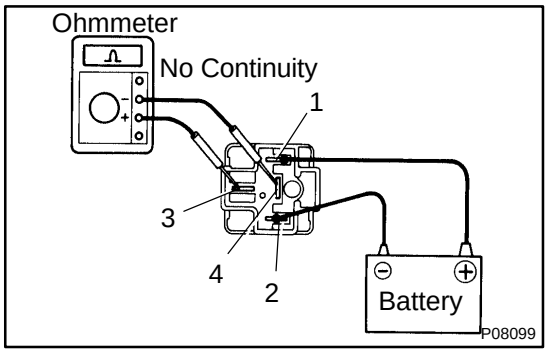

(d) Inspect the cooling fan relay operation.

(1) Apply battery voltage across terminals 1 and 2.

(2) Using an ohmmeter, check that there is no continuity between terminals 3 and 4.

If there is continuity, replace the relay.

(e) Reinstall the No.1 cooling fan relay.

(f) Reinstall the relay box cover.

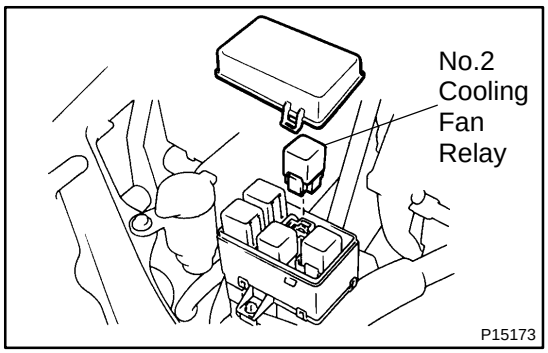

2. INSPECT NO.2 COOLING FAN RELAY

(a) Remove the relay box cover.

(b) Remove the No.2 cooling fan relay. (Marking: FAN NO.2)

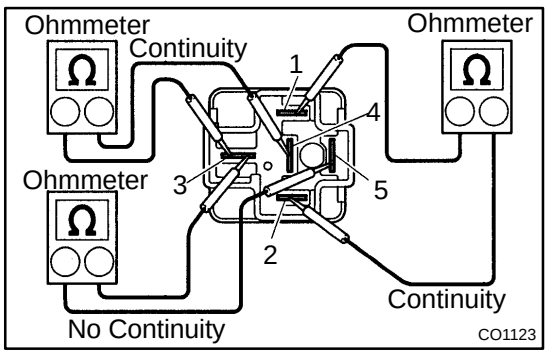

(c) Inspect the cooling fan relay continuity.

(1) Using an ohmmeter, check that there is continuity between terminals 1 and 2.

If there is no continuity, replace the relay.

(2) Check that there is continuity between terminals 3 and 4.

If there is no continuity, replace the relay.

(3) Check that there is no continuity between terminals 3 and 5.

If there is continuity, replace the relay.

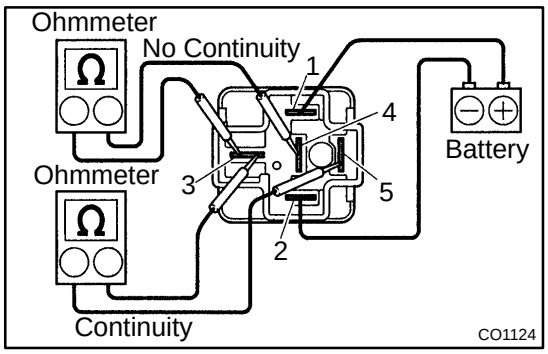

(d) Inspect the cooling fan relay operation.
(1) Apply battery voltage across terminals 1 and 2.
(2) Using an ohmmeter, check that there is no continuity between terminals 3 and 4.

If there is continuity, replace the relay.

(3) Using an ohmmeter, check that there is continuity between terminals 3 and 5.

If there is no continuity, replace the relay.

(e) Reinstall the No. 2 cooling fan relay.
(f) Reinstall the relay box cover.

3. INSPECT NO.3 COOLING FAN RELAY

(a) Remove the relay box cover.
(b) Remove the No.3 cooling fan relay. (Marking: A.C FAN No.3)

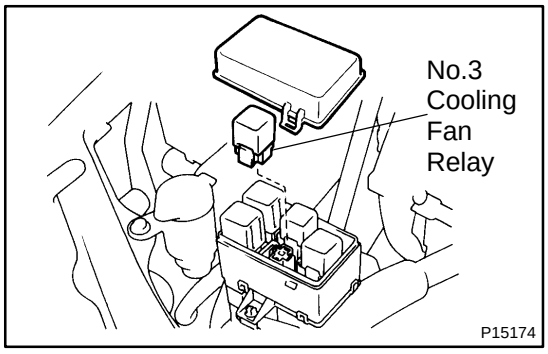

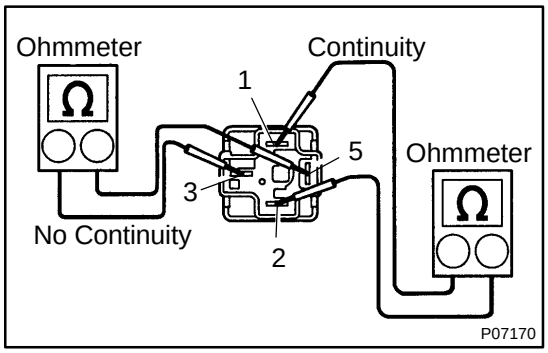

(c) Inspect the cooling fan relay continuity.
(1) Using an ohmmeter, check that there is continuity between terminals 1 and 2.

If there is no continuity, replace the relay.

(2) Check that there is no continuity between terminals 3 and 5.

If there is continuity, replace the relay.

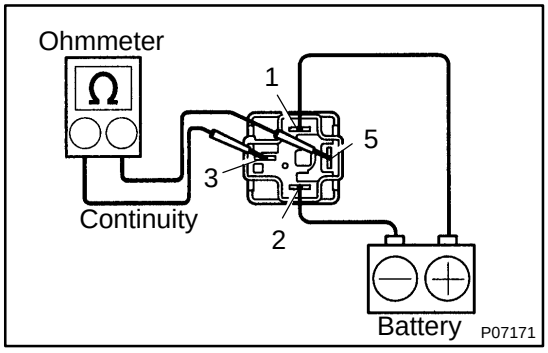

(d) Inspect the cooling fan relay operation.
(1) Apply battery voltage across terminals 1 and 2.
(2) Using an ohmmeter, check that there is continuity between terminals 3 and 5.

If there is no continuity, replace the relay.

(e) Reinstall the No. 3 cooling fan relay.
(f) Reinstall the relay box cover.

EM0JJ-02

INSPECTION

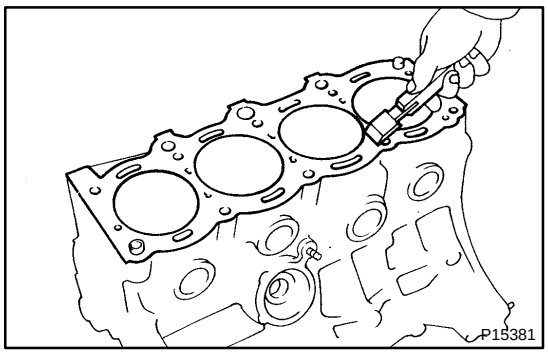

1. CLEAN CYLINDER BLOCK

(a) Remove the gasket material.
Using a gasket scraper, remove all the gasket material from the top surface of the cylinder block.

(b) Clean the cylinder block.
Using a soft brush and solvent, thoroughly clean the cylinder block.

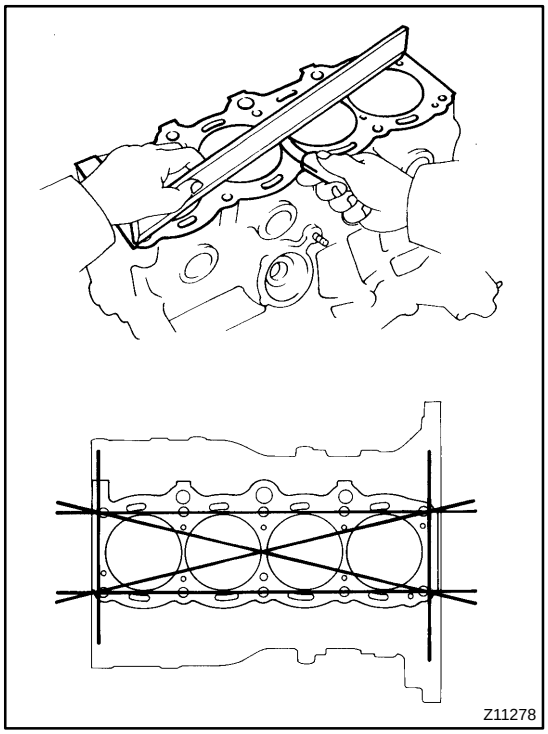

2. INSPECT TOP SURFACE OF CYLINDER BLOCK FOR FLATNESS

Using a precision straight edge and feeler gauge, measure the surfaces contacting the cylinder head gasket for warpage.

Maximum warpage:
0.05 mm (0.0020 in.)

If warpage is greater than maximum, replace the cylinder block.

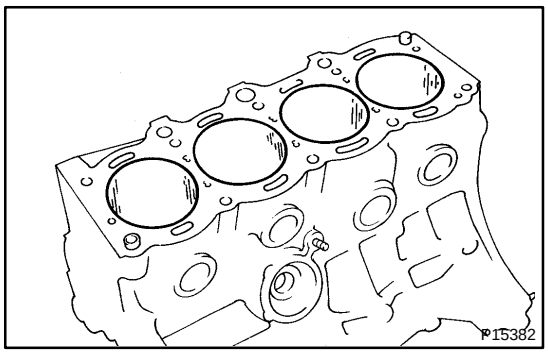

3. INSPECT CYLINDER FOR VERTICAL SCRATCHES

Visually check the cylinder for vertical scratches.
If deep scratches are present, rebore all the 4 cylinders (See page EM-106). If necessary, replace the cylinder block.

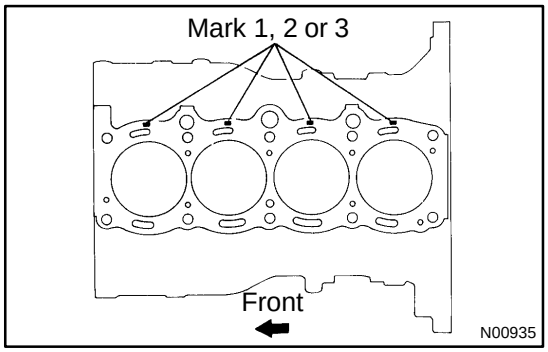

4. INSPECT CYLINDER BORE DIAMETER

HINT:
There are 3 sizes of the standard cylinder bore diameter, marked ”1”, ”2” and ”3” accordingly. The mark is stamped on the top of the cylinder block.

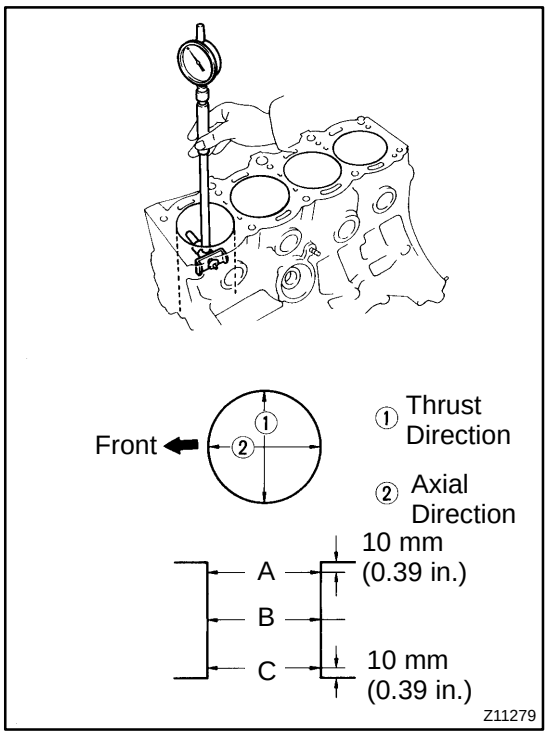

Using a cylinder gauge, measure the cylinder bore diameter at positions A, B and C in the thrust and axial directions.

Standard diameter:

Mark "1"	87.000 - 87.010 mm (3.4252 - 3.4256 in.)
Mark "2"	87.010 - 87.020 mm (3.4256 - 3.4260 in.)
Mark "3"	87.020 - 87.030 mm (3.4260 - 3.4264 in.)

Maximum diameter:

STD	87.23 mm (3.4342 in.)
O/S 0.50	87.73 mm (3.4350 in.)

If the diameter is greater than maximum, rebore all the 4 cylinders. If necessary, replace the cylinder block.

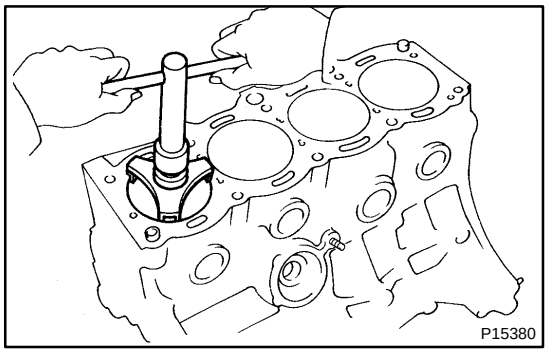

5. REMOVE CYLINDER RIDGE

If the wear is less than 0.2 mm (0.008 in.), using a ridge reamer, grind the top of the cylinder.

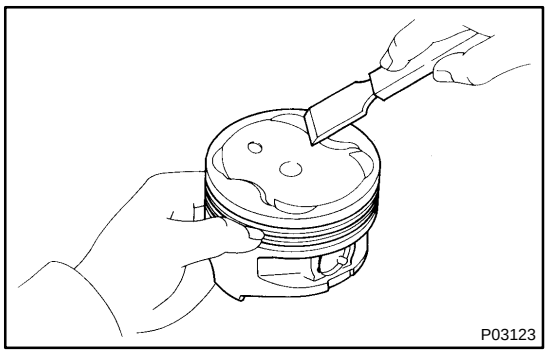

6. CLEAN PISTON

(a) Using a gasket scraper, remove the carbon from the piston top.

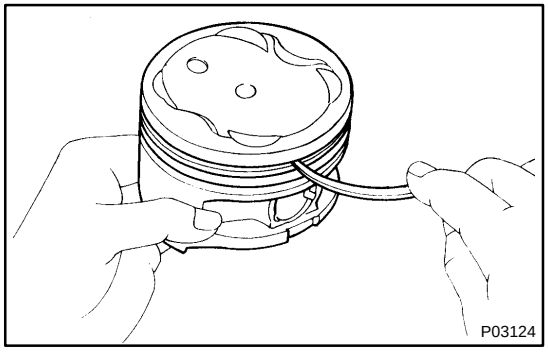

(b) Using a groove cleaning tool or broken ring, clean the piston ring grooves.

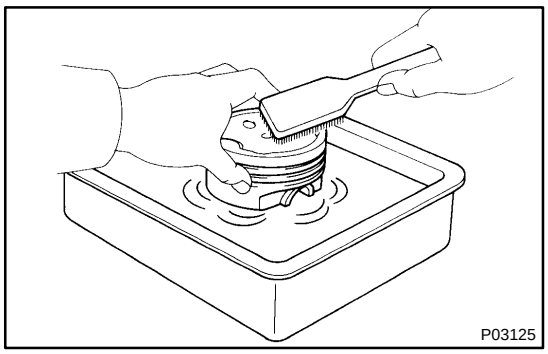

(c) Using solvent and a brush, thoroughly clean the piston.

NOTICE:

Do not use a wire brush.

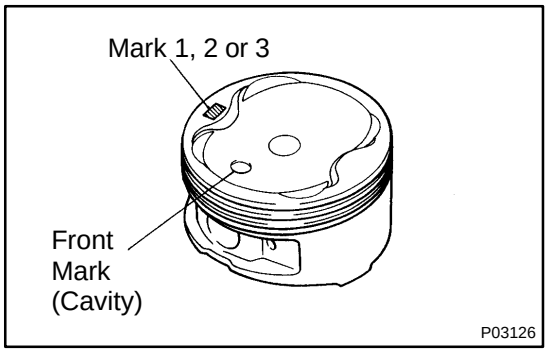

7. INSPECT PISTON OIL CLEARANCE

HINT:

There are 3 sizes of the standard piston diameter, marked ”1”, ”2” and ”3” accordingly. The mark is stamped on the piston top.

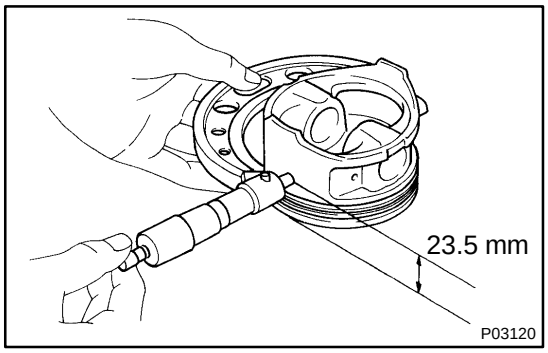

(a) Using a micrometer, measure the piston diameter at right angles to the piston pin center line, 23.5 mm (0.925 in.) from the piston head.

Piston diameter:

STD	Mark ”1”	86.850 - 86.860 mm (3.4193 - 3.4197 in.)
	Mark ”2”	86.860 - 86.870 mm (3.4197 - 3.4201 in.)
	Mark ”3”	86.870 - 86.880 mm (3.4201 - 3.4205 in.)
O/S 0.50		87.350 - 87.380 mm (3.4390 - 3.4402 in.)

(b) Measure the cylinder bore diameter in the thrust directions. (See step 4)

(c) Subtract the piston diameter measurement from the cylinder bore diameter measurement.

Standard oil clearance:

0.14 - 0.16 mm (0.0055 - 0.0063 in.)

Maximum oil clearance:

0.18 mm (0.0071 in.)

If the oil clearance is greater than maximum, replace all the 4 pistons and rebore all the 4 cylinders. If necessary, replace the cylinder block.

HINT:

Use new cylinder block:

Use a piston with the same number mark as the cylinder bore diameter marked on the cylinder block.

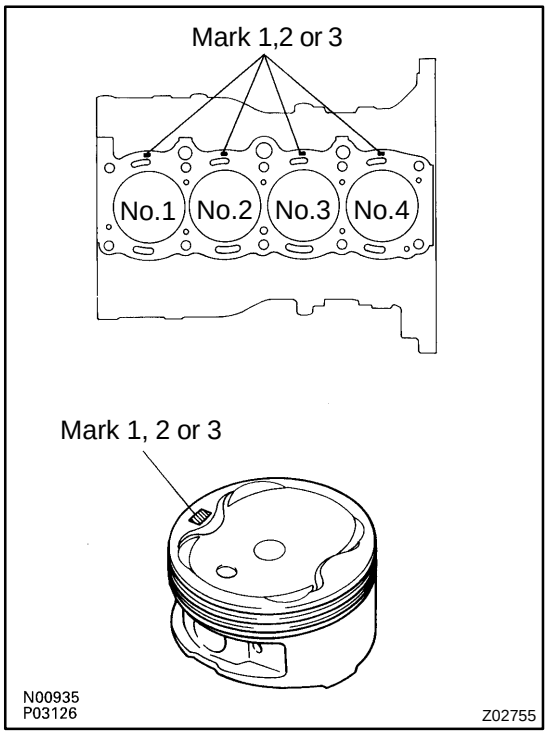

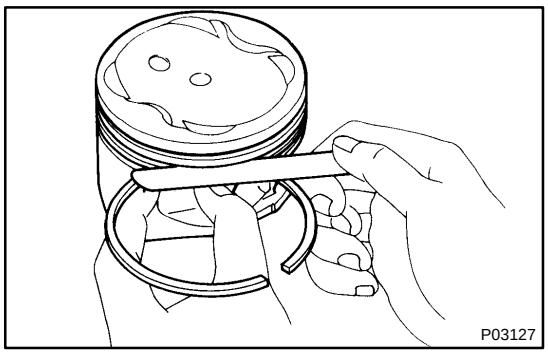

8. INSPECT PISTON RING GROOVE CLEARANCE

Using a feeler gauge, measure the clearance between new piston ring and the wall of the ring groove.

Ring groove clearance:

No.1

0.040 - 0.080 mm (0.0016 - 0.0031 in.)

No.2

0.030 - 0.070 mm (0.0012 - 0.0028 in.)

If the clearance is greater than maximum, replace the piston.

9. INSPECT PISTON RING END GAP

(a) Insert the piston ring into the cylinder bore.

(b) Using a piston, push the piston ring a little beyond the bottom of the ring travel, 115 mm (4.53 in.) from the top of the cylinder block.

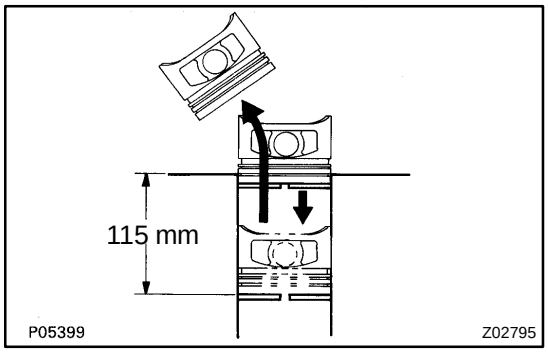

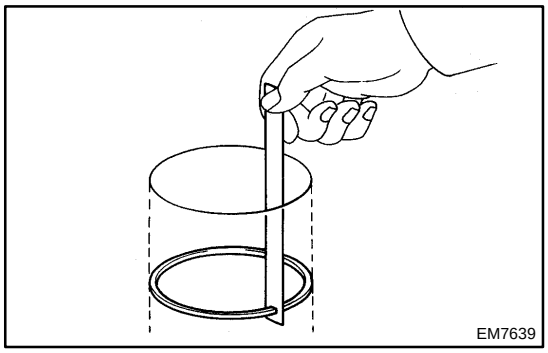

(c) Using a feeler gauge, measure the end gap.

Standard end gap:

No.1	0.270 - 0.500 mm (0.0106 - 0.0197 in.)
No.2	0.350 - 0.600 mm (0.0138 - 0.0236 in.)
Oil (Side rail)	0.200 - 0.550 mm (0.0079 - 0.0217 in.)

Maximum end gap:

No.1	1.10 mm (0.0433 in.)
No.2	1.20 mm (0.0472 in.)
Oil (Side rail)	1.15 mm (0.0453 in.)

If the end gap is greater than maximum, replace the piston ring.
If the end gap is greater than maximum, even with a new piston ring, rebore all the 4 cylinders or replace the cylinder block.

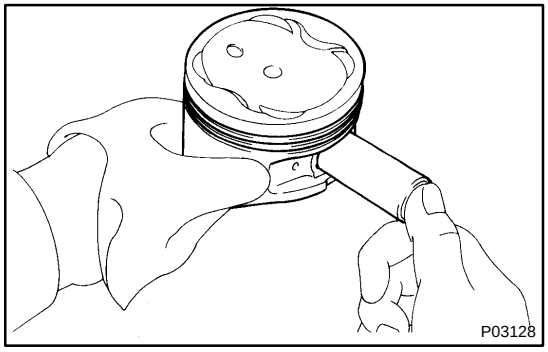

10. INSPECT PISTON PIN FIT

At 60˚C (140˚F), you should be able to push the piston pin into the piston pin hole with your thumb.

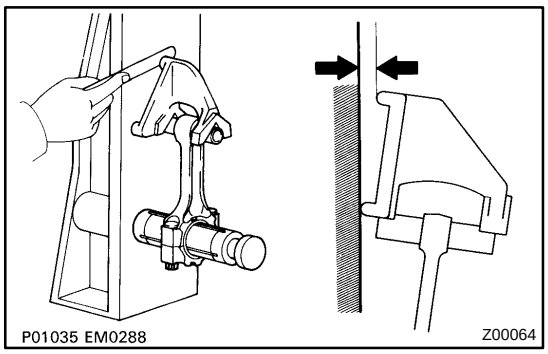

11. INSPECT CONNECTING ROD

Using a rod aligner and feeler gauge, check the connecting rod alignment.

- Check for bend.

Maximum bend:

0.05 mm (0.0020 in.) per 100 mm (3.94 in.)

If bend is greater than maximum, replace the connecting rod assembly.

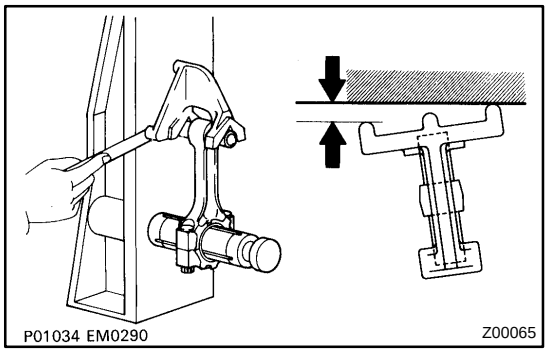

- Check for twist

Maximum twist:

0.15 mm (0.0059 in.) per 100 mm (3.94 in.)

If twist is greater than maximum, replace the connecting rod assembly.

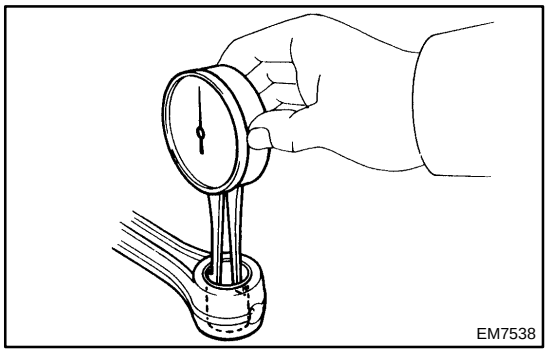

12. INSPECT PISTON PIN OIL CLEARANCE

(a) Using a caliper gauge, measure the inside diameter of the connecting rod bushing.

Bushing inside diameter:

22.005 - 22.017 mm (0.8663 - 0.8668 in.)

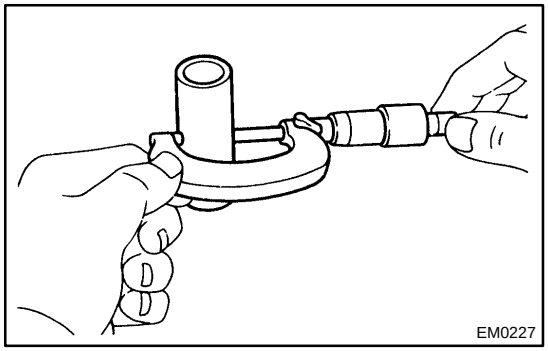

(b) Using a micrometer, measure the piston pin diameter.

Piston pin diameter:

21.997 - 22.009 mm (0.8660 - 0.8665 in.)

(c) Subtract the piston pin diameter measurement from the bushing inside diameter measurement.

Standard oil clearance:

0.005 - 0.011 mm (0.0002 - 0.0004 in.)

Maximum oil clearance:

0.05 mm (0.0020 in.)

If the oil clearance is greater than maximum, replace the bushing. If necessary, replace the piston and piston pin as a set.

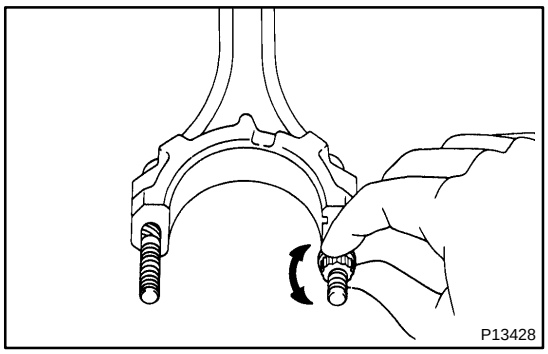

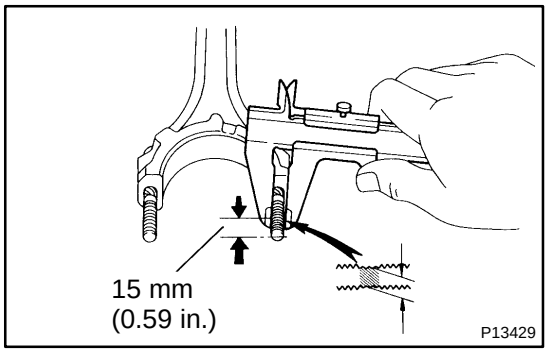

13. INSPECT CONNECTING ROD BOLTS

(a) Install the cap nut to the connecting rod bolt. Check that the cap nut can be turned easily by hand to the end of the thread.

(b) If the cap nut cannot be turned easily, measure the outside diameter of the connecting rod bolt with a vernier caliper.

Standard diameter:
7.860 - 8.000 mm (0.3094 - 0.3150 in.)
Minimum diameter:
7.60 mm (0.2992 in.)

HINT:
If the location of this area cannot be judged by visual inspection, measure the outer diameter at the location shown in the illustration.
If the outside diameter is less than minimum, replace the connecting rod bolt and nut as a set.

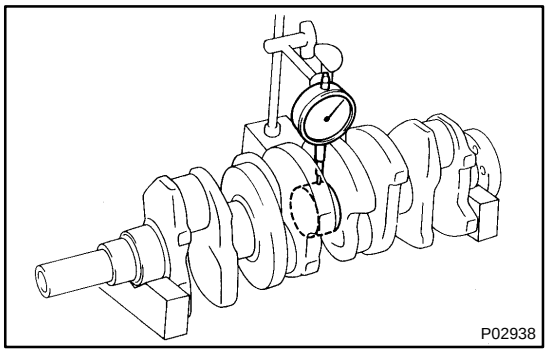

14. INSPECT CRANKSHAFT FOR CIRCLE RUNOUT

(a) Place the crankshaft on V-blocks.

(b) Using a dial indicator, measure the circle runout at the center journal.

Maximum circle runout:
0.06 mm (0.0024 in.)

If the circle runout is greater than maximum, replace the crankshaft.

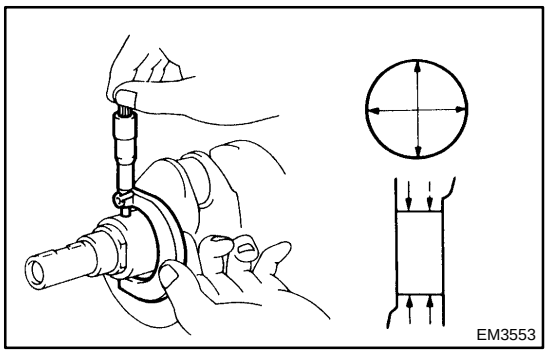

15. INSPECT MAIN JOURNALS AND CRANK PINS

(a) Using a micrometer, measure the diameter of each main journal and crank pin.

Main journal diameter:

STD	54.988 - 55.003 mm (2.1653 - 2.1655 in.)
U/S 0.25	54.745 - 54.755 mm (2.1553 - 2.1557 in.)

Crank pin diameter:

STD	51.985 - 52.000 mm (2.0466 - 2.0472 in.)
U/S 0.25	51.745 - 51.755 mm (2.0372 - 2.0376 in.)

If the diameter is not as specified, check the oil clearance (See page EM-92). If necessary, grind or replace the crankshaft.

(b) Check each main journal and crank pin for taper and out-of-round as shown.

Maximum taper and out-of-round:
0.02 mm (0.0008 in.)

If the taper and out-of-round is greater than maximum, replace the crankshaft.

16. IF NECESSARY, GRIND AND HONE MAIN JOURNALS AND/OR CRANK PINS

Grind and hone the main journals and/or crank pins to the finished undersized diameter (See step 2). Install new main journal and/or crankshaft pin undersized bearings.

17. REPLACE OVERSIZED (O/S) PISTONS FOR CYLINDER BORING

HINT:

- Bore all the 4 cylinders for the oversized piston outside diameter.
- Replace all the piston rings with ones to match the oversized pistons.

18. KEEP OVERSIZED PISTONS

Oversized piston diameter:
O/S 0.50
87.350 - 87.380 mm (3.4390 - 3.4402 in.)

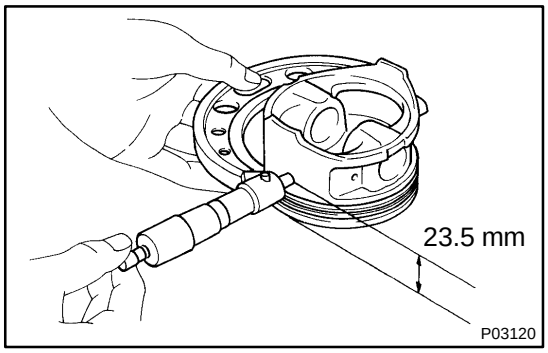

19. CALCULATE AMOUNT TO BORE CYLINDERS

(a) Using a micrometer, measure the piston diameter at rihgt angles to the piston pin center line, 23.5 mm (0.925 in.) from the piston head.

(b) Caluculate the amount of each cylinder is to be rebored as follows:
Size to be rebored = P + C - H
P = Piston diameter
C = Piston oil clearance
0.140 - 0.160 mm (0.0055 - 0.0063 in.)
H = Allowance for honing
0.20 mm (0.0008 in.) or less

20. BORE AND HONE CYLINDER TO CALCULATED DIMENSIONS

Maximum honing:
0.02 mm (0.0008 in.)

NOTICE:
Excess honing will destroy the finished roundness.

EM0JA-03

INSPECTION

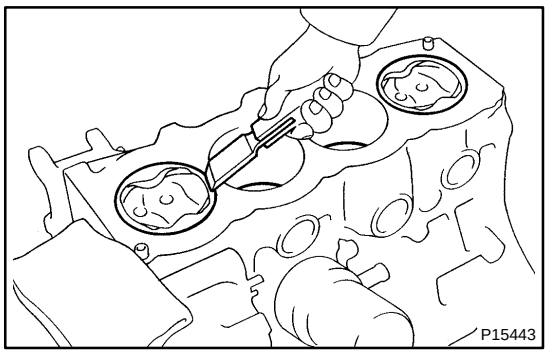

1. CLEAN TOP SURFACES OF PISTONS AND CYLINDER BLOCK

(a) Turn the crankshaft, and bring each piston to top dead center (TDC). Using a gasket scraper, remove all the carbon from the piston top surface.

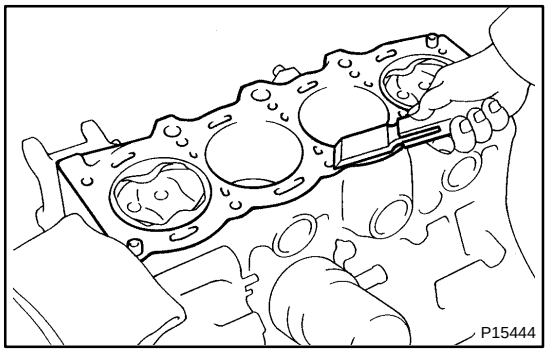

(b) Using a gasket scraper, remove all the gasket material from the cylinder block surface.

(c) Using compressed air, blow carbon and oil from the bolt holes.

CAUTION:

Protect your eyes when using high-pressure compressed air.

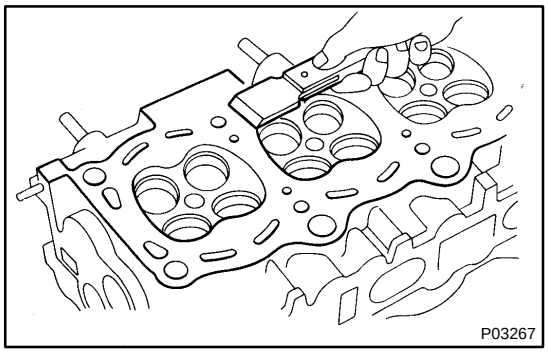

2. CLEAN CYLINDER HEAD

(a) Remove gasket material.

Using a gasket scraper, remove all the gasket material from the cylinder block contact surface.

NOTICE:

Be careful not to scratch the cylinder block contact surface.

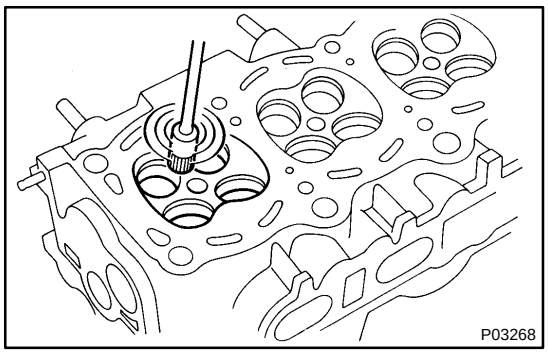

(b) Clean combustion chambers.

Using a wire brush, remove all the carbon from the combustion chamber.

NOTICE:

Be careful not to scratch the cylinder block contact surface.

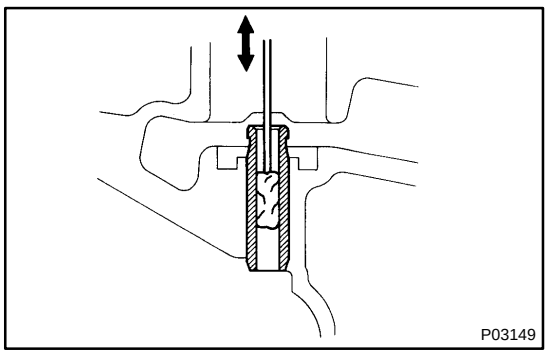

(c) Clean valve guide bushings.

Using a valve guide bushing brush and solvent, clean all the guide bushings.

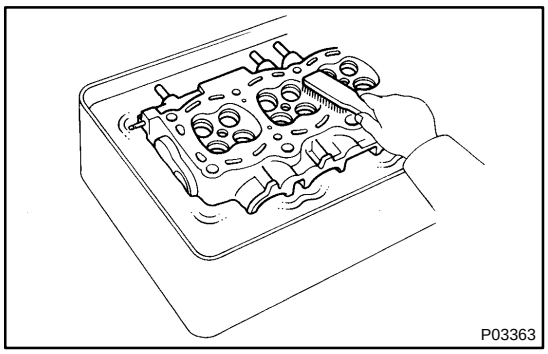

(d) Clean cylinder head.
Using a soft brush and solvent, thoroughly clean the cylinder head.

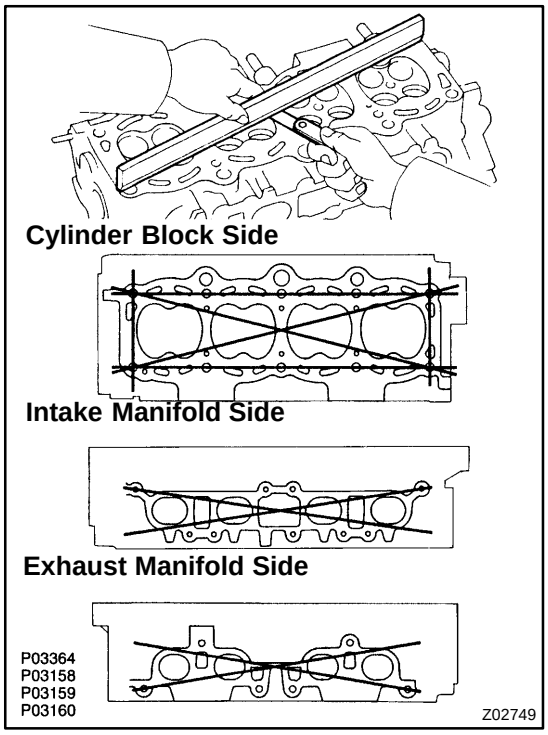

3. INSPECT CYLINDER HEAD

(a) Inspect for flatness.
Using a precision straight edge and feeler gauge, measure the surfaces contacting the cylinder block and the manifolds for warpage.
Maximum warpage:

Cylinder block side	0.05 mm (0.0020 in.)
Manifold side	0.08 mm (0.0031 in.)

If warpage is greater than maximum, replace the cylinder head.

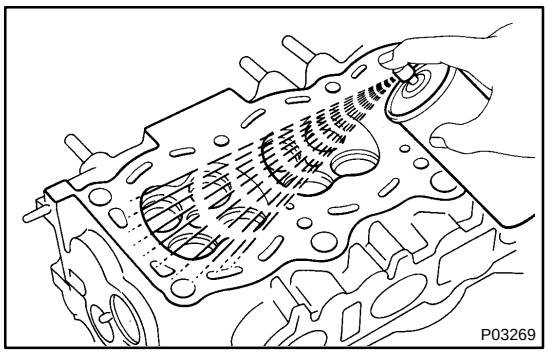

(b) Inspect for cracks.
Using a dye penetrant, check the combustion chamber, intake ports, exhaust ports and cylinder block surface for cracks.

If cracked, replace the cylinder head.

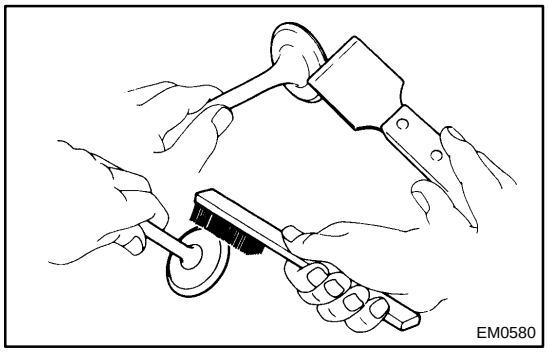

4. CLEAN VALVES

(a) Using a gasket scraper, chip off any carbon from the valve head.
(b) Using a wire brush, thoroughly clean the valve.

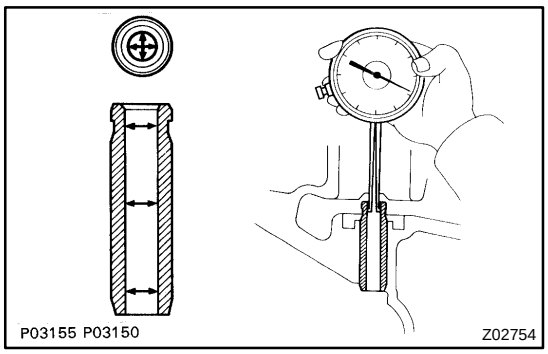

5. INSPECT VALVE STEMS AND GUIDE BUSHINGS

(a) Using a caliper gauge, measure the inside diameter of the guide bushing.

Bushing inside diameter:
6.010 - 6.030 mm (0.2366 - 0.2374 in.)

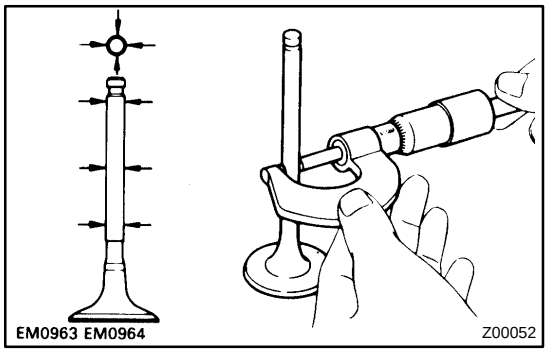

(b) Using a micrometer, measure the diameter of the valve stem.

Valve stem diameter:

Intake	5.970 - 5.985 mm (0.2350 - 0.2356 in.)
Exhaust	5.965 - 5.980 mm (0.2348 - 0.2354 in.)

(c) Subtract the valve stem diameter measurement from the guide bushing inside diameter measurement.

Standard oil clearance:

Intake	0.025 - 0.060 mm (0.0010 - 0.0024 in.)
Exhaust	0.030 - 0.065 mm (0.0012 - 0.0026 in.)

Maximum oil clearance:

Intake	0.08 mm (0.0031 in.)
Exhaust	0.10 mm (0.0039 in.)

If the clearance is greater than maximum, replace the valve and guide bushing (See page EM-49).

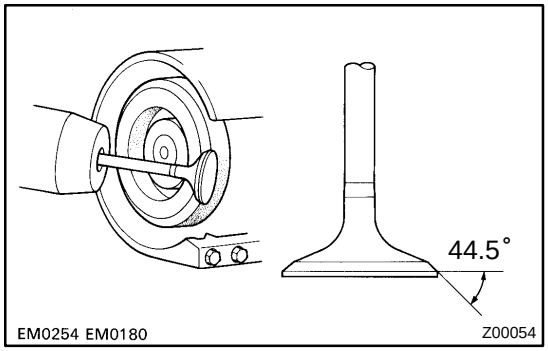

6. INSPECT AND GRIND VALVES

(a) Grind the valve enough to remove pits and carbon.

(b) Check that the valve is ground to the correct valve face angle.

Valve face angle:
44.5°

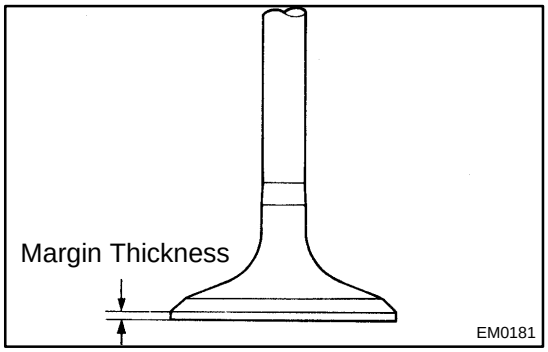

(c) Check the valve head margin thickness.

Standard margin thickness:
0.8 - 1.2 mm (0.031 - 0.047 in.)
Minimum margin thickness:
0.5 mm (0.020 in.)

If the margin thickness is less than minimum, replace the valve.

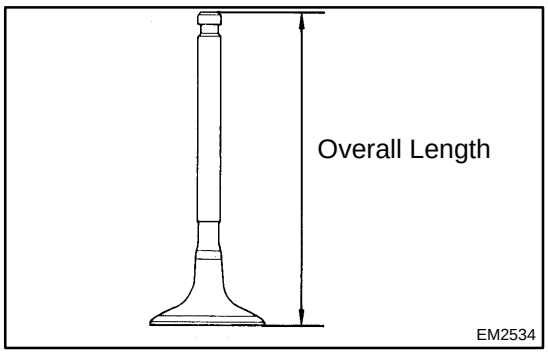

(d) Check the valve overall length.

Standard overall length:

Intake	97.40 - 97.80 mm (3.8346 - 3.8504 in.)
Exhaust	98.25 - 98.65 mm (3.8681 - 3.8839 in.)

Minimum overall length:

Intake	97.1 mm (3.823 in.)
Exhaust	98.0 mm (3.858 in.)

If the overall length is less than minimum, replace the valve.

(e) Check the surface of the valve stem tip for wear.

If the valve stem tip is worn, resurface the tip with a grinder or replace the valve.

NOTICE:

Do not grind off more than the minimum length.

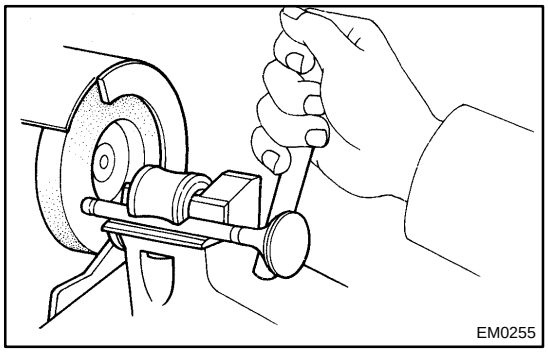

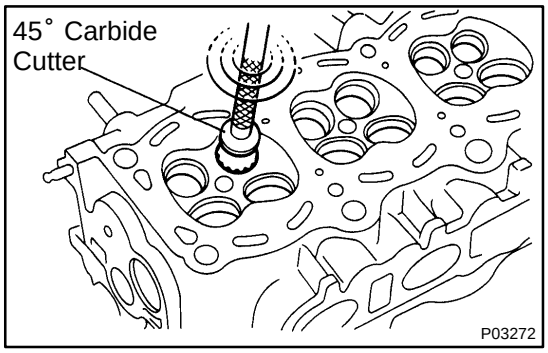

7. INSPECT AND CLEAN VALVE SEATS

(a) Using a 45˚ carbide cutter, resurface the valve seats. Remove only enough metal to clean the seats.

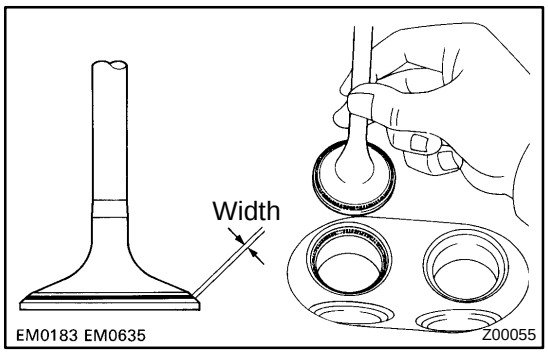

(b) Check the valve seating position.

Apply a light coat of prussian blue (or white lead) to the valve face. Lightly press the valve against the seat. Do not rotate valve.

(c) Check the valve face and seat for the following:

- If blue appears 360˚ around the face, the valve is concentric. If not, replace the valve.
- If blue appears 360˚ around the valve seat, the guide and face are concentric. If not, resurface the seat.
- Check that the seat contact is in the middle of the valve face with the following width:

1.0 - 1.4 mm (0.039 - 0.055 in.)

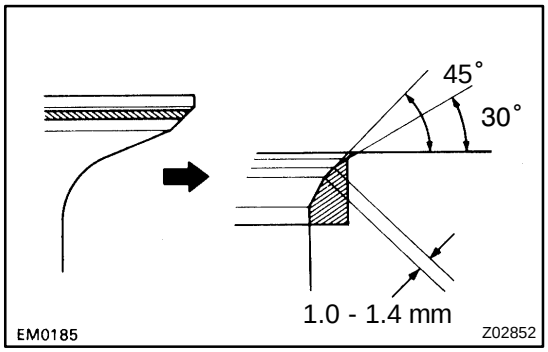

If not, correct the valve seats as follows:

(1) If the seating is too high on the valve face, use 30˚ and 45˚ cutters to correct the seat.

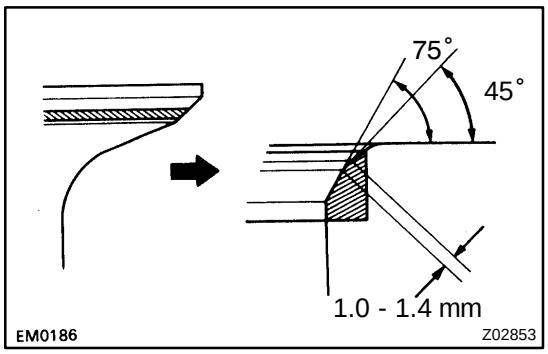

(2) If the seating is too low on the valve face, use 75° and 45° cutters to correct the seat.

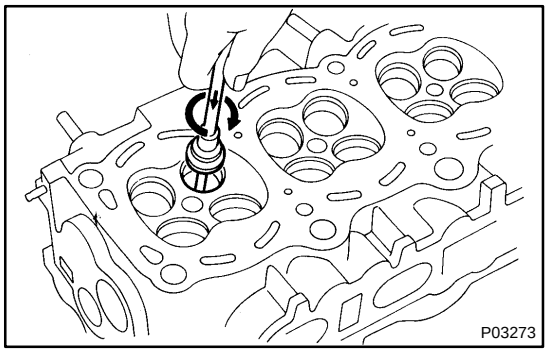

(d) Hand-lap the valve and valve seat with an abrasive compound.

(e) After hand-lapping, clean the valve and valve seat.

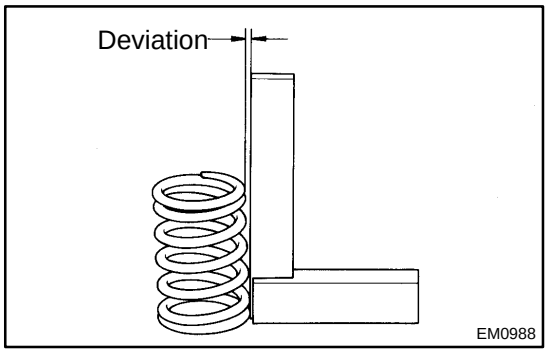

8. INSPECT VALVE SPRINGS

(a) Using a steel square, measure the deviation of the valve spring.

Maximum deviation:
2.0 mm (0.079 in.)

If the deviation is greater than maximum, replace the valve spring.

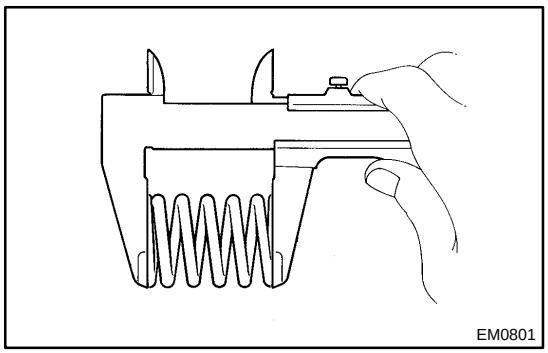

(b) Using a vernier caliper, measure the free length of the valve spring.

Free length:
41.79 - 41.99 mm (1.6453 - 1.6531 in.)

If the free length is not as specified, replace the valve spring.

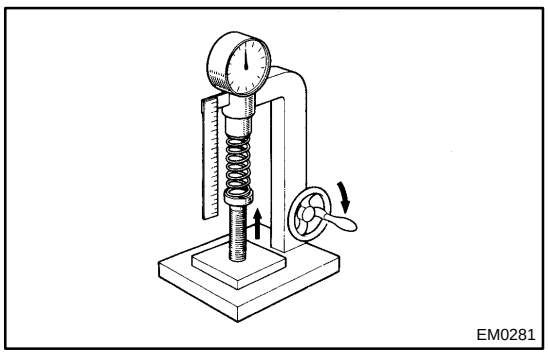

(c) Using a spring tester, measure the tension of the valve spring at the specified installed length.

Installed tension:
164 - 189 N (16.7 - 19.3 kgf, 36.8 - 42.5 lbf)
at 34.7 mm (1.366 in.)

If the installed tension is not as specified, replace the valve spring.

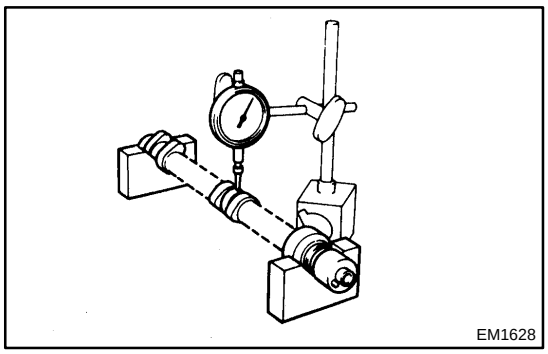
EM1628

9. INSPECT CAMSHAFT FOR RUNOUT

(a) Place the camshaft on V-blocks.

(b) Using a dial indicator, measure the circle runout at the center journal.

Maximum circle runout:

0.04 mm (0.0016 in.)

If the circle runout is greater than maximum, replace the camshaft.

10. INSPECT CAM LOBES

Using a micrometer, measure the cam lobe height.

Standard cam lobe height:

Intake	42.01 - 42.11 mm (1.6539 - 1.6579 in.)
Exhaust	40.06 - 40.16 mm (1.5772 - 1.5811 in.)

Minimum cam lobe height:

Intake	41.90 mm (1.6496 in.)
Exhaust	39.95 mm (1.5728 in.)

If the cam lobe height is less than minimum, replace the camshaft.

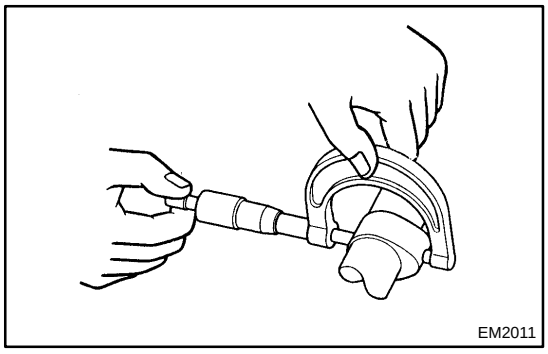
EM2011

11. INSPECT CAMSHAFT JOURNALS

Using a micrometer, measure the journal diameter.

Journal diameter:

26.959 - 26.975 mm (1.0614 - 1.0620 in.)

If the journal diameter is not as specified, check the oil clearance.

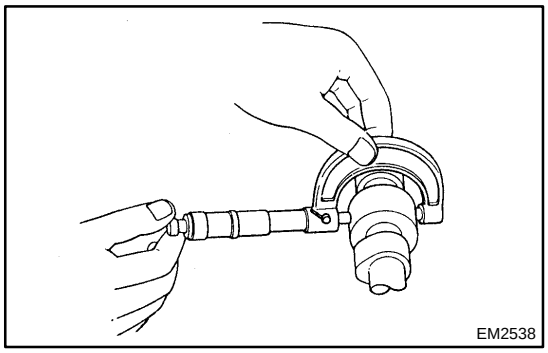
EM2538

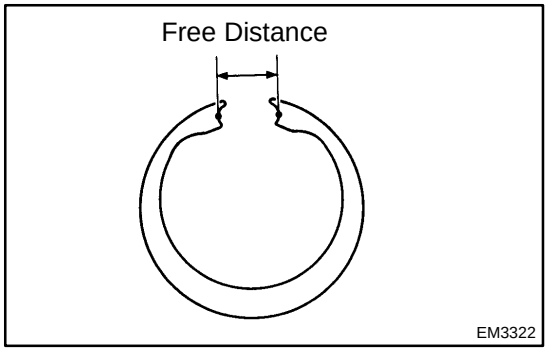

EM3322

12. INSPECT CAMSHAFT GEAR SPRING

Using a vernier caliper, measure the free distance between the spring ends.

Free distance:

22.5 - 22.9 mm (0.886 - 0.902 in.)

If the free distance is not as specified, replace the gear spring.

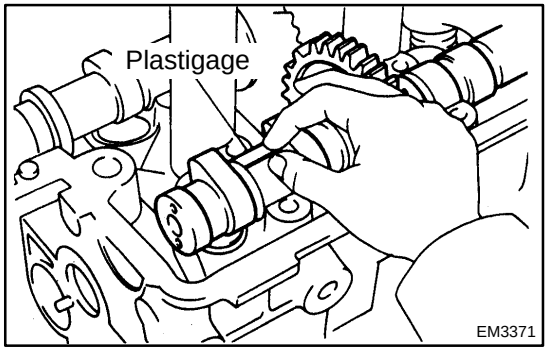

EM3371

13. INSPECT CAMSHAFT JOURNAL OIL CLEARANCE

(a) Clean the bearing caps and camshaft journals.

(b) Check that bearings for flaking and scoring.

If the bearings are damaged, replace the bearing caps and cylinder head as a set.

(c) Place the camshafts on the cylinder head.

(d) Lay a strip of Plastigage across each of the camshaft journals.

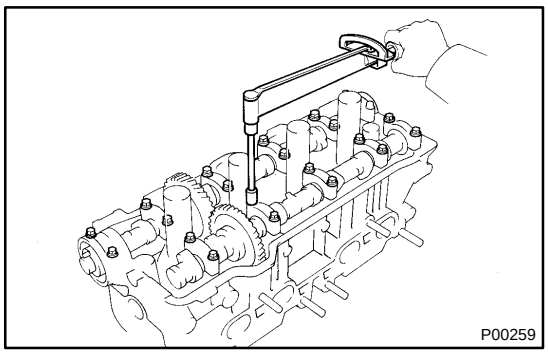

(e) Install the bearing caps (See page EM-53).

NOTICE:

Do not turn the camshaft.

(f) Remove the bearing caps.

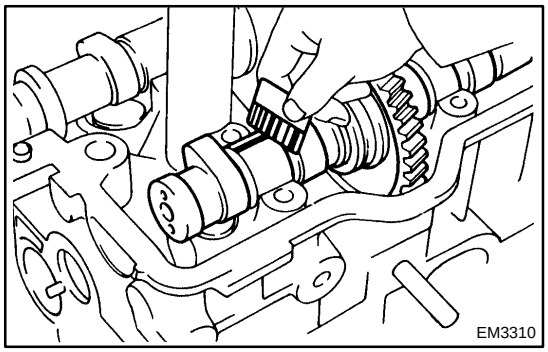

(g) Measure the Plastigage at its widest point.

Standard oil clearance:

0.025 - 0.062 mm (0.0010 - 0.0024 in.)

Maximum oil clearance:

0.10 mm (0.0039 in.)

If the oil clearance is greater than maximum, replace the camshaft. If necessary, replace the bearing caps and cylinder head as a set.

(h) Completely remove the Plastigage.

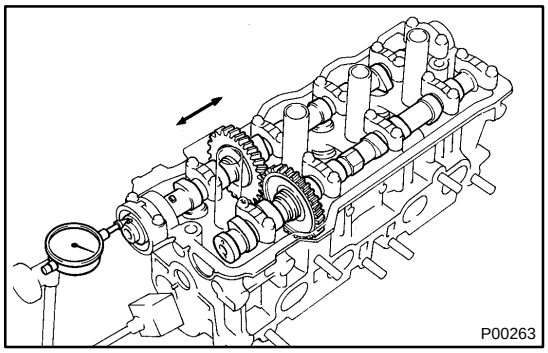

14. INSPECT CAMSHAFT THRUST CLEARANCE

(a) Install the camshaft (See page EM-53).

(b) Using a dial indicator, measure the thrust clearance while moving the camshaft back and forth.

Standard thrust clearance:

Intake	0.045 - 0.100 mm (0.0018 - 0.0039 in.)
Exhaust	0.030 - 0.085 mm (0.0012 - 0.0033 in.)

Maximum thrust clearance:

Intake	0.12 mm (0.0047 in.)
Exhaust	0.10 mm (0.0039 in.)

If the thrust clearance is greater than maximum, replace the camshaft. If necessary, replace the bearing caps and cylinder head as a set.

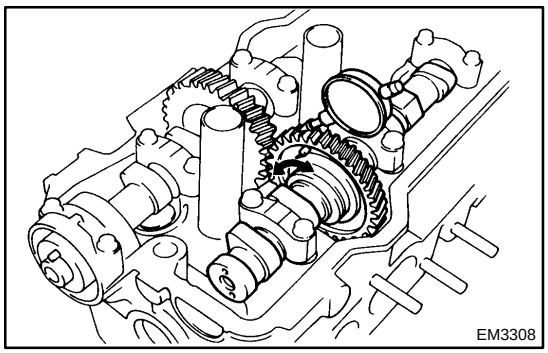

15. INSPECT CAMSHAFT GEAR BACKLASH

(a) Install the camshafts without installing the exhaust cam sub-gear (See page EM-53).

(b) Using a dial indicator, measure the backlash.

Standard backlash:

0.020 - 0.200 mm (0.0008 - 0.0079 in.)

Maximum backlash:

0.30 mm (0.0188 in.)

If the backlash is greater then maximum, replace the camshafts.

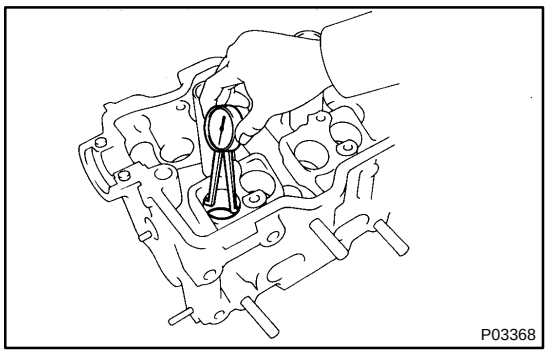
P03368

16. INSPECT VALVE LIFTERS AND LIFTER BORES

(a) Using a caliper gauge, measure the lifter bore diameter of the cylinder head.
Lifter bore diameter:
31.000 - 31.018 mm (1.2205 - 1.2212 in.)

(b) Using a micrometer, measure the lifter diameter.
Lifter diameter:
30.966 - 30.976 mm (1.2191 - 1.2195 in.)

(c) Subtract the lifter diameter measurement from the lifter bore diameter measurement.
Standard oil clearance:
0.024 - 0.052 mm (0.0009 - 0.0020 in.)
Maximum oil clearance:
0.07 mm (0.0028 in.)

If the oil clearance is greater than maximum, replace the lifter. If necessary, replace the cylinder head.

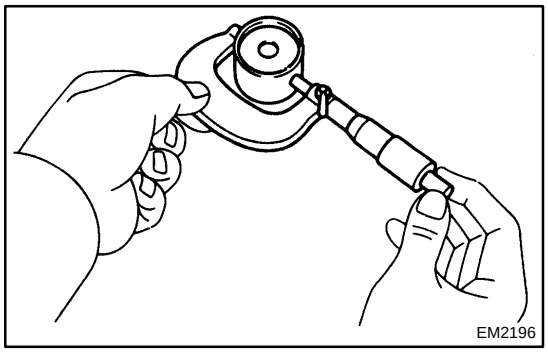
EM2196

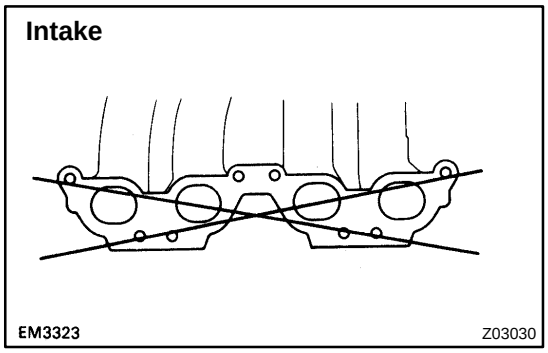

17. INSPECT INTAKE MANIFOLDS

Using a precision straight edge and feeler gauge, measure the surface contacting the cylinder head for warpage.
Maximum warpage:
0.30 mm (0.0118 in.)

If warpage is greater than maximum, replace the manifold.

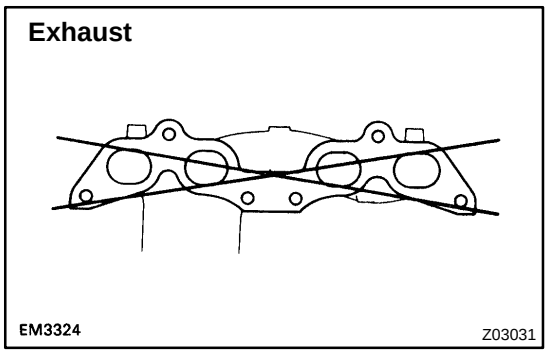

18. INSPECT EXHAUST MANIFOLDS

Using a precision straight edge and feeler gauge, measure the surface contacting the cylinder head for warpage.
Maximum warpage:
0.30 mm (0.0118 in.)

If warpage is greater than maximum, replace the manifold.

IG087-02

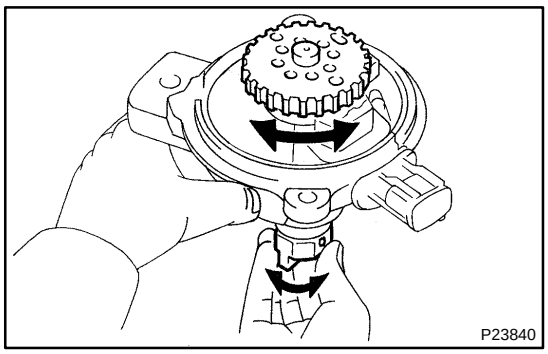

INSPECTION

INSPECT SHAFT

Turn the shaft and check that it is not rough or worn.
If it feels rough or worn, replace the distributor housing assembly.

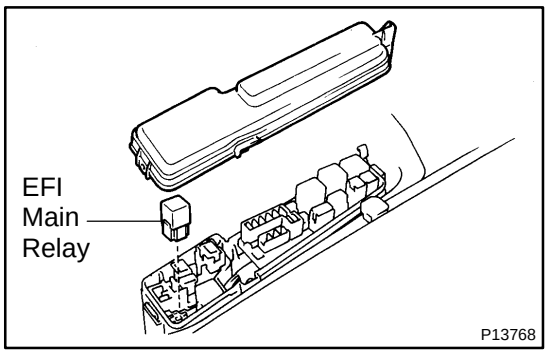

EFI MAIN RELAY

SF0VM-05

INSPECTION

1. REMOVE EFI MAIN RELAY

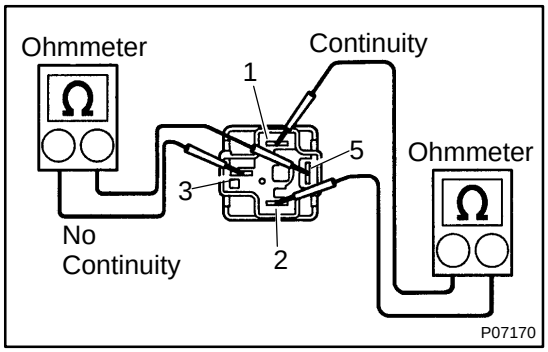

2. INSPECT RELAY CONTINUITY

(a) Using an ohmmeter, check that there is continuity between terminals 1 and 2.

If there is no continuity, replace the relay.

(b) Check that there is no continuity between terminals 3 and 5.

If there is continuity, replace the relay.

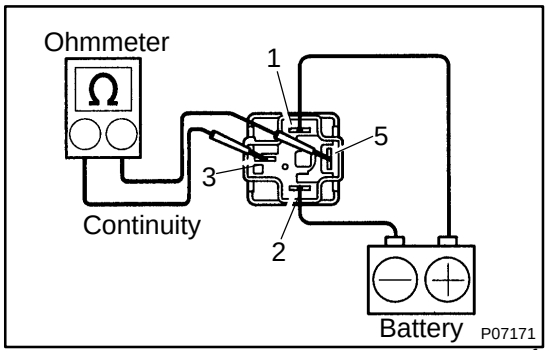

3. INSPECT RELAY OPERATION

(a) Apply battery voltage across terminals 1 and 2.

(b) Using an ohmmeter, check that there is continuity between terminals 3 and 5.

If there is no continuity, replace the relay.

4. REINSTALL EFI MAIN RELAY

SF0W4-02

INSPECTION

1. REMOVE ECM
2. INSPECT ECM (See page DI-125)
3. REINSTALL ECM

ENGINE COOLANT TEMPERATURE (ECT) SENSOR

COMPONENTS

SF0VR-02

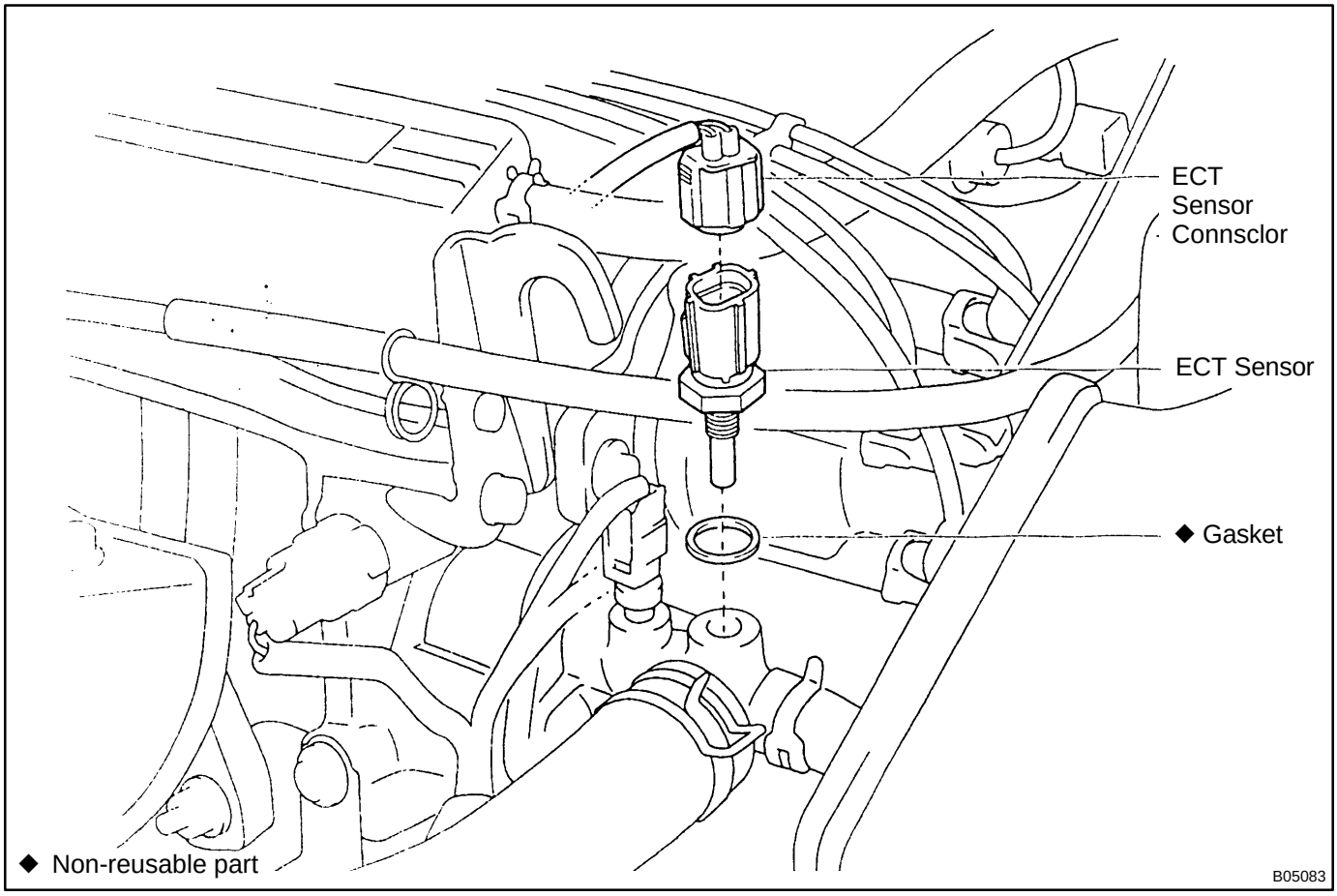

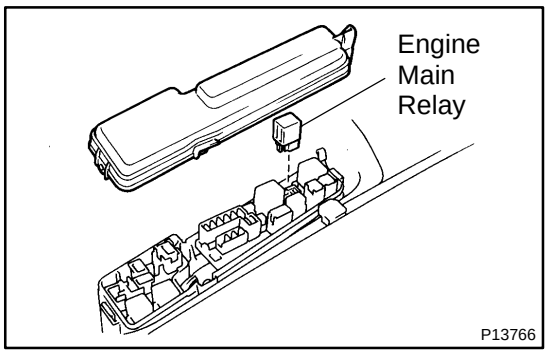

ENGINE MAIN RELAY

CO0GV-03

INSPECTION

1. REMOVE RELAY BOX COVER

2. REMOVE ENGINE MAIN RELAY (Marking: E/G MAIN)

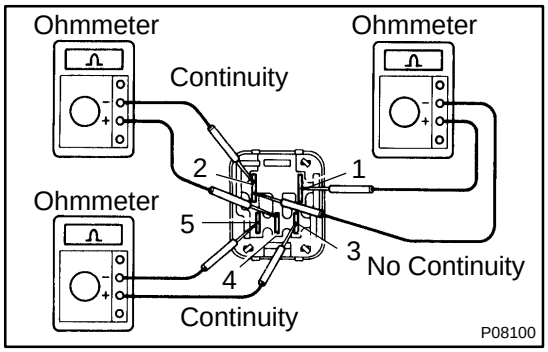

3. INSPECT RELAY CONTINUITY

(a) Using an ohmmeter, check that there is continuity between terminals 3 and 5.

If there is no continuity, replace the relay.

(b) Check that there is continuity between terminals 2 and 4.

If there is no continuity, replace the relay.

(c) Check that there is no continuity between terminals 1 and 2.

If there is continuity, replace the relay.

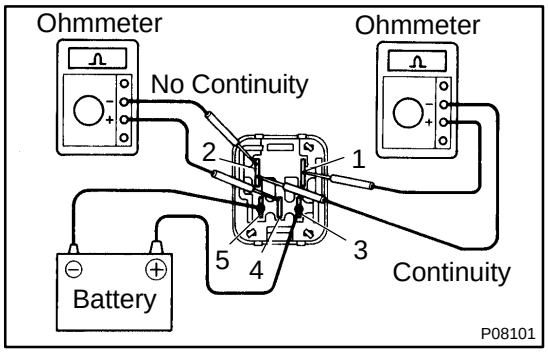

4. INSPECT RELAY OPERATION

(a) Apply battery voltage across terminals 3 and 5.

(b) Using an ohmmeter, check that there is no continuity between terminals 2 and 4.

If there is continuity, replace the relay.

(c) Check that there is continuity between terminals 1 and 2.

If there is no continuity, replace the relay.

5. REINSTALL ENGINE MAIN RELAY

6. REINSTALL RELAY BOX COVER

EC0GS-02

INSPECTION

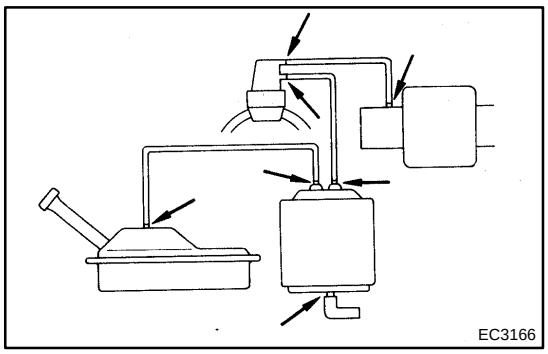

1. VISUALLY INSPECT LINES AND CONNECTIONS

Look for loosen connections, sharp bends or damage.

2. VISUALLY INSPECT FUEL TANK

Look for deformation, cracks or fuel leakage.

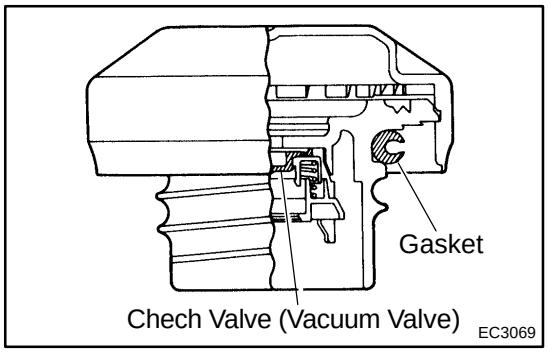

3. VISUALLY INSPECT FUEL TANK CAP

Check if the cap and/or gasket are deformed or damaged.
If necessary, repair or replace the cap.

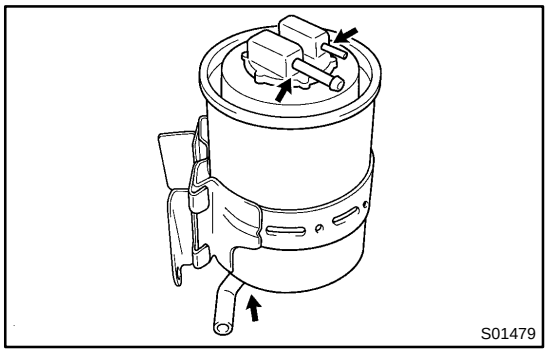

4. INSPECT CHARCOAL CANISTER

(a) Remove charcoal canister
(b) Remove cap from charcoal canister
(c) Visually inspect charcoal canister
Look for cracks or damage.

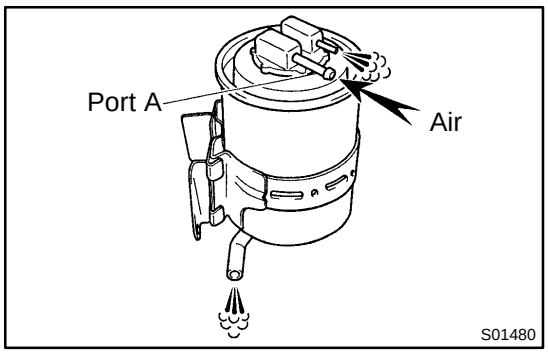

(d) Inspect for clogged filter and stuck check valve
(1) Using low pressure compressed air 4.71 kPa (48 gf/cm^2, 0.68 psi), blow into port A and check that air flows without resistance from the other ports.

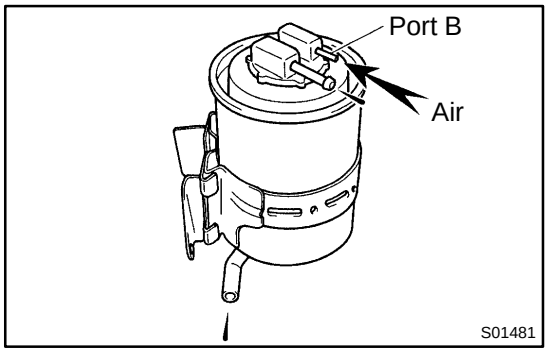

(2) Blow air 4.71 kPa (48 gf/cm^2, 0.68 psi) into port B and check that air does not flow from the other ports.

If a problem is found, replace the charcoal canister.

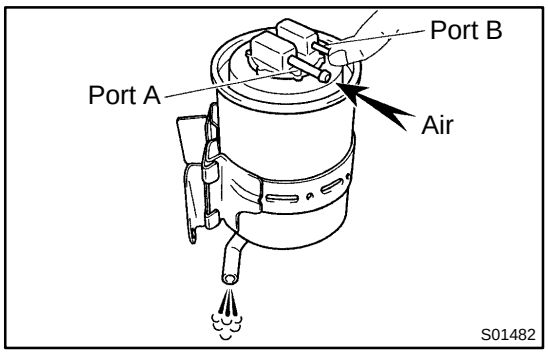

(e) Clean filter in canister
Clean the filter by blowing 294 kPa (3 kgf/cm^2, 43 psi) of compressed air into port A while holding port B closed.

NOTICE:

Do not attempt to wash the canister.No activated carbon should come out.

(f) Reinstall cap to charcoal canister

(g) Reinstall charcoal canister

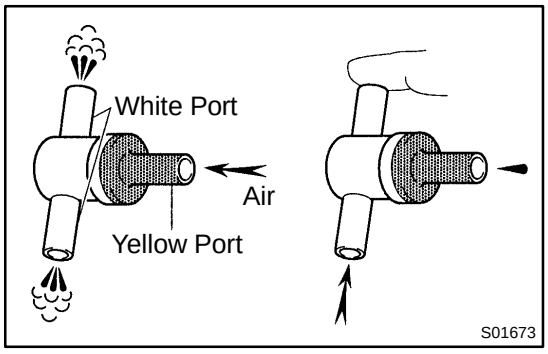

(h) Remove check valve

(i) Inspect check valve

(1) Check that air flows from the yellow port to the white ports.

(2) Plug the white ports on one side, and check thar air does not flow from the white port to the yellow port.

If operation is not as specified, replace the check valve.

(j) Reinstall check valve

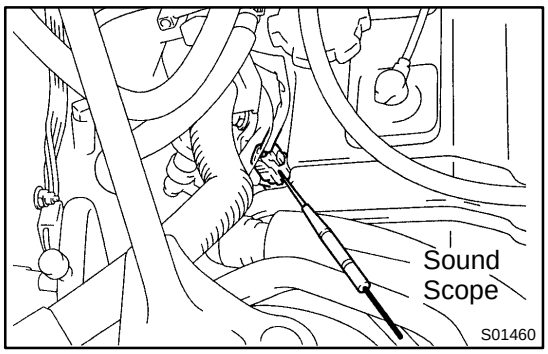

FUEL CUT RPM

SF0W5-02

INSPECTION

1. WARM UP ENGINE

Allow the engine to warm up to normal operating temperature.

2. CONNECT TOYOTA HAND-HELD TESTER OR OBDII SCAN TOOL

(See page SF-1)

3. INSPECT FUEL CUT RPM OPERATION

(a) Increase the engine speed to at least 2,500 rpm.

(b) Check for injector operating noise.

(c) Check that when the throttle lever is released, injector operation noise stops momentarily and then resumes.

HINT:

Measure with the A/C OFF.

Fuel return speed: 1,500 rpm

4. DISCONNECT TOYOTA HAND- HELD TESTER OR OBDII SCAN TOOL

SF0VA-02

INSPECTION

INSPECT FUEL TANK AND LINE

(a) Check the fuel lines for cracks or leakage, and all connections for deformation.

(b) Check the fuel tank vapor vent system hoses and connections for looseness, sharp bends or damage.

(c) Check the fuel tank for deformation, cracks, fuel leakage or tank band looseness.

(d) Check the filler neck for damage or fuel leakage.

(e) Hose and tube connections are as shown in the illustration.

If a problem is found, repair or replace the part as necessary.

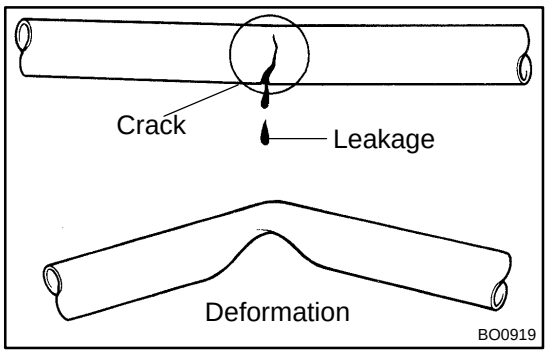

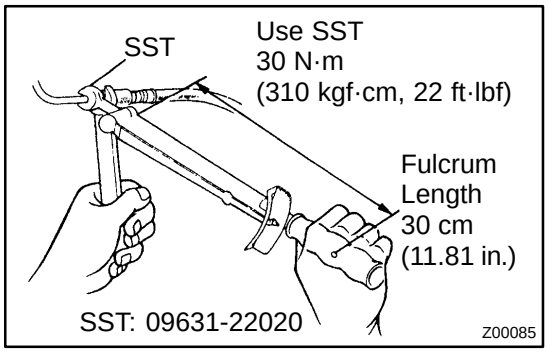

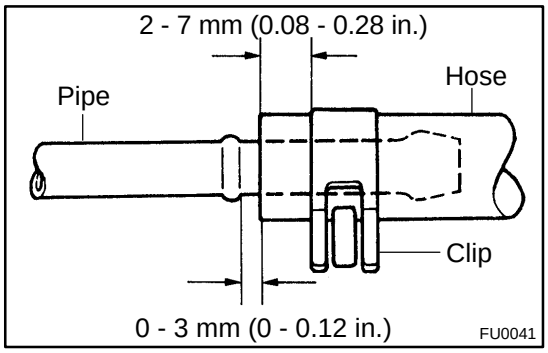

CH061-03

INSPECTION

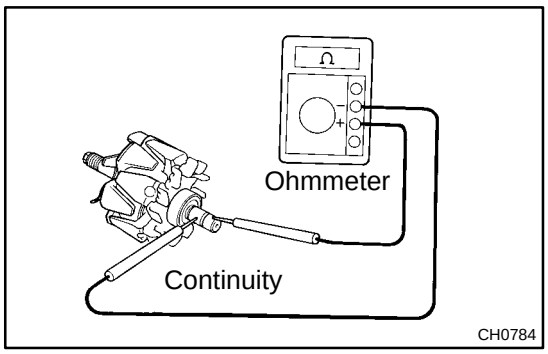

1. INSPECT ROTOR FOR OPEN CIRCUIT

Using an ohmmeter, check that there is continuity between the slip rings.

Standard resistance:
2.7 - 3.1 Ω at 20˚C (68˚F)

If there is no continuity, replace the rotor.

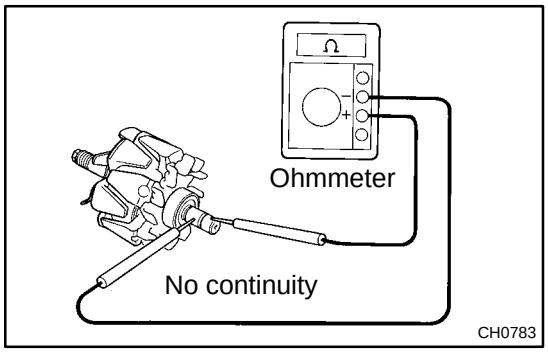

2. INSPECT ROTOR FOR GROUND

Using an ohmmeter, check that there is no continuity between the slip ring and rotor.

If there is continuity, replace the rotor.

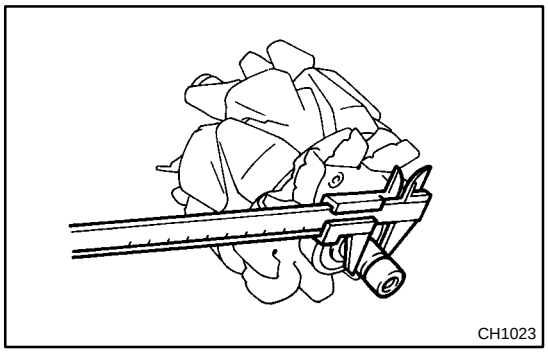

3. INSPECT SLIP RINGS

(a) Check that the slip rings are not rough or scored.

If rough or scored, replace the rotor.

(b) Using a vernier caliper, measure the slip ring diameter.

Standard diameter:
14.2 - 14.4 mm (0.559 - 0.567 in.)
Minimum diameter:
14.0 mm (0.551 in.)

If the diameter is less than minimum, replace the rotor.

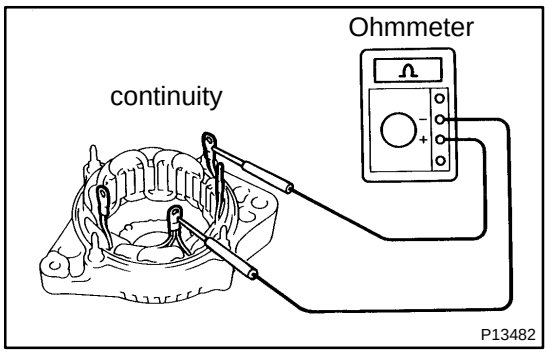

4. INSPECT STATOR FOR OPEN CIRCUIT

Using an ohmmeter, check that there is continuity between the coil leads.

If there is no continuity, replace the drive end frame assembly.

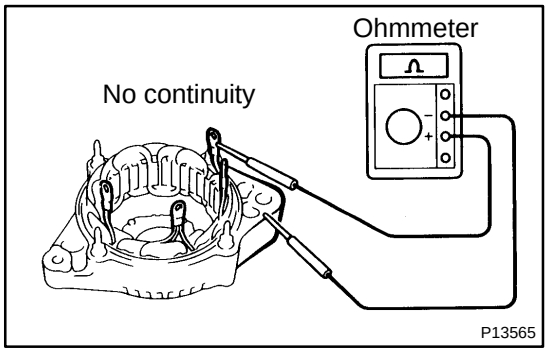

5. INSPECT STATOR FOR GROUND

Using an ohmmeter, check that there is no continuity between the coil lead and drive end frame.

If there is continuity, replace the drive end frame assembly.

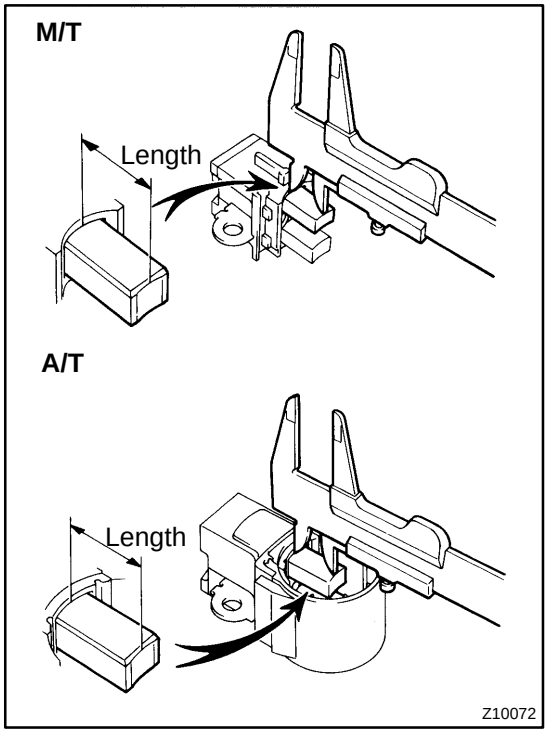

6. INSPECT EXPOSED BRUSH LENGTH

Using vernier calipers, measure the exposed brush length.

Standard exposed length:
10.5 mm (0.413 in.)
Minimum exposed length:
1.5 mm (0.059 in.)

If the exposed length is less than minimum, replace the brushes (M/T) or brush holder assembly (A/T).

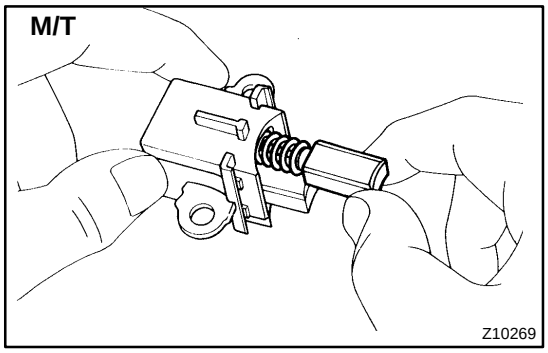

7. M/T:
IF NECESSARY, REPLACE BRUSHES

(a) Unsolder and remove the brush and spring.
(b) Run the wire of a new brush through the hole in the brush holder, and insert the spring and brush into the brush holder.

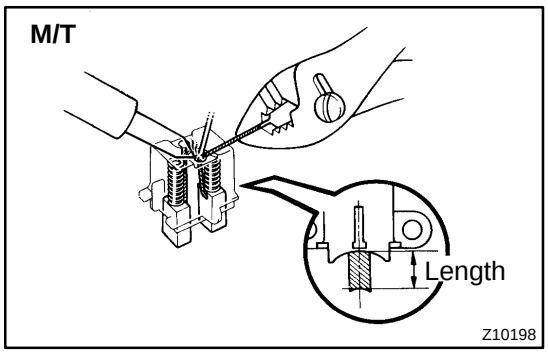

(c) Solder the brush wire to the brush holder at specified exposed length.
Exposed length:
10.5 mm (0.413 in.)
(d) Check that the brush moves smoothly in the brush holder.
(e) Cut off the excess wire.
(f) Apply insulation paint to the soldered area.

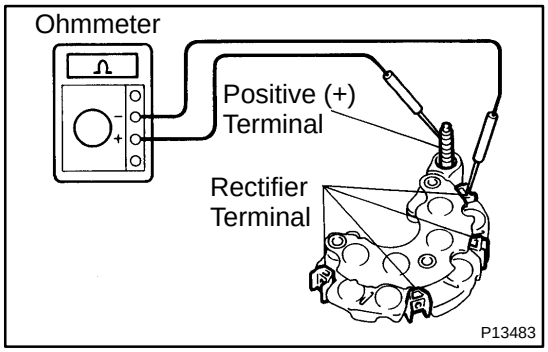

8. INSPECT POSITIVE RECTIFIER

(a) Using an ohmmeter, connect one tester probe to the positive (+) terminal and the other to each rectifier terminal.
(b) Reverse the polarity of the tester probes and repeat step (a).
(c) Check that one shows continuity and the other shows no continuity.

If continuity is not as specified, replace the rectifier holder.

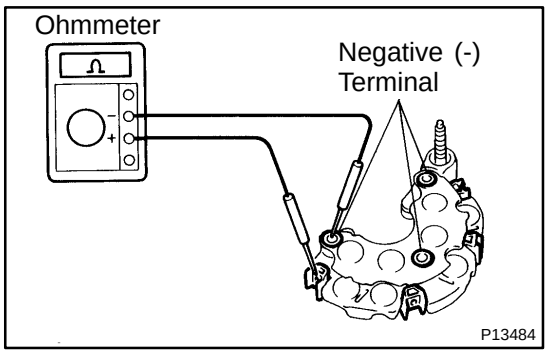

9. INSPECT NEGATIVE RECTIFIER

(a) Using an ohmmeter, connect one tester probe to each negative (-) terminal and the other to each rectifier terminal.

(b) Reverse the polarity of the tester probes and repeat step (a).

(c) Check that one shows continuity and the other shows no continuity.

If continuity is not as specified, replace the rectifier holder.

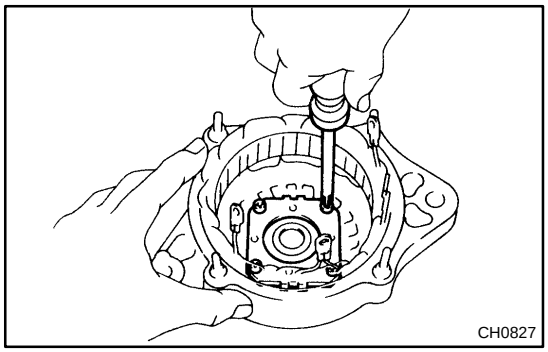

10. INSPECT FRONT BEARING

Check that the bearing is not rough or worn.

11. IF NECESSARY, REPLACE FRONT BEARING

(a) Remove the 4 screws, bearing retainer and bearing.

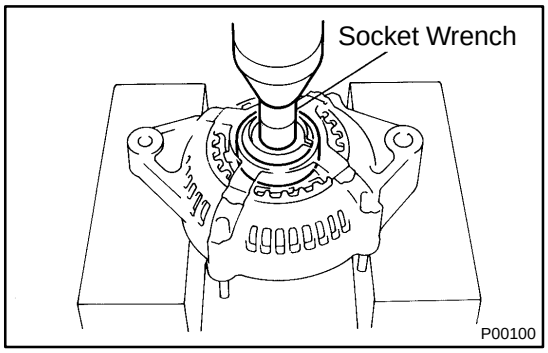

(b) Using a socket wrench and press, press out the bearing.

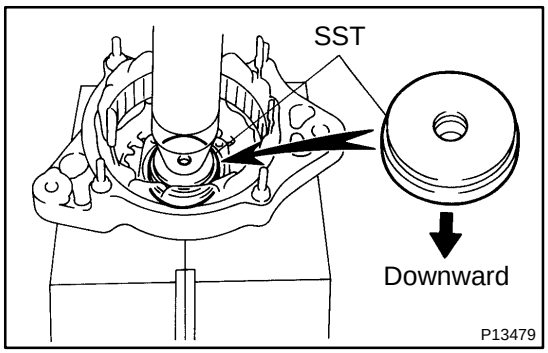

(c) Using SST and a press, press in a new bearing.
SST 09950-60010 (09951-00460)

(d) Install the bearing retainer with the 4 screws.
Torque:
M/T: 2.6 N·m (27 kgf·cm, 23 in.·lbf)
A/T: 3.0 N·m (31 kgf·cm, 27 in.·lbf)

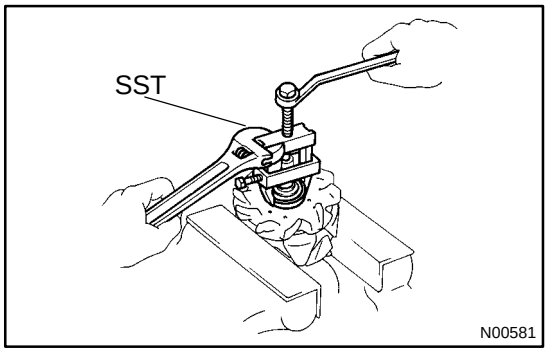

12. INSPECT REAR BEARING

Check that the bearing is not rough or worn.

13. IF NECESSARY, REPLACE REAR BEARING

(a) Using SST, remove the bearing cover (outside) and bearing.
SST 09820-00021

NOTICE:

Be careful not to damage the fan.

(b) Remove the bearing cover (inside).

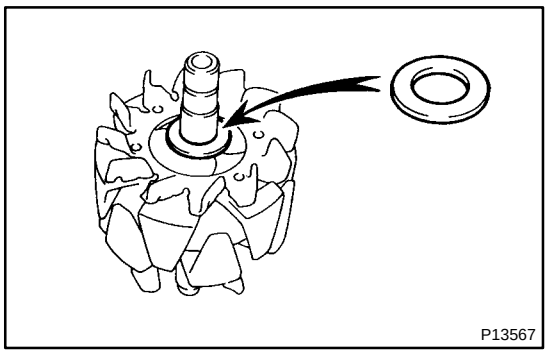

(c) Place the bearing cover (inside) on the rotor.

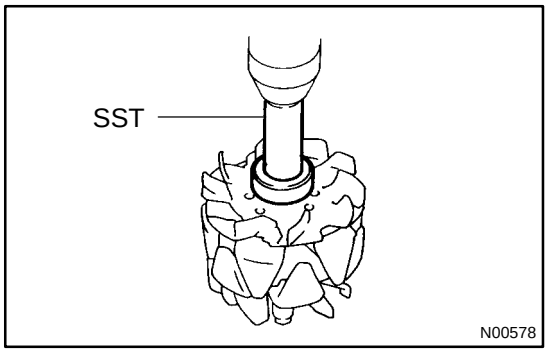

(d) Using SST and a press, press in a new bearing.
SST 09820-00030

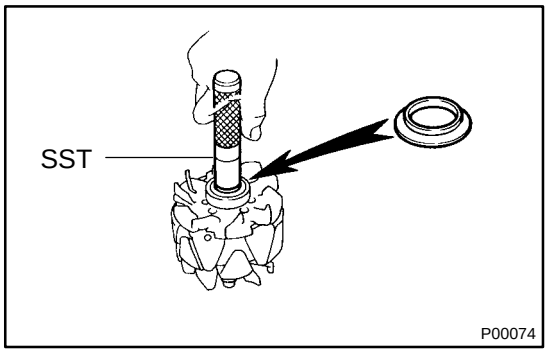

(e) Using SST, push in the bearing cover (outside).
SST 09285-76010

SF0W2-02

INSPECTION

INSPECT OXYGEN SENSOR OPERATION (See page DI-151)

IDLE SPEED

EM081-06

INSPECTION

1. INITIAL CONDITIONS

(a) Engine at normal operating temperature
(b) Air cleaner installed
(c) All pipes and hoses of air induction system connected
(d) All vacuum lines properly connected
(e) SFI system wiring connectors fully plugged
(f) All operating accessories switched OFF
(g) Ignition timing check correctly
(h) Transmission in neutral position
(i) Air conditioning switched OFF

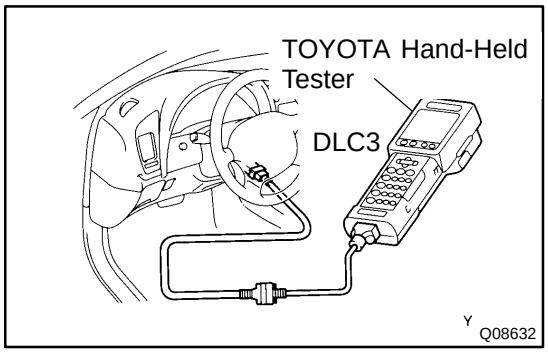

2. CONNECT TOYOTA HAND-HELD TESTER OR OBDII SCAN TOOL

(a) Remove the fuse cover on the instrument panel.
(b) Connect a TOYOTA hand-held tester or OBDII scan tool to the DLC3.
(c) Please refer to the TOYOTA hand-held tester or OBDII scan tool operator's manual for further details.

3. INSPECT IDLE SPEED

(a) Race the engine at 2,500 rpm for approx. 90 seconds.
(b) Check the idle speed.

Idle speed (w/ Cooling fan OFF): 700 ± 50 rpm

If the idle speed is not as specified, check the IAC valve and air intake system.

4. DISCONNECT TOYOTA HAND- HELD TESTER OR OBDII SCAN TOOL

TIMING BELT

COMPONENTS

EM0J3-02

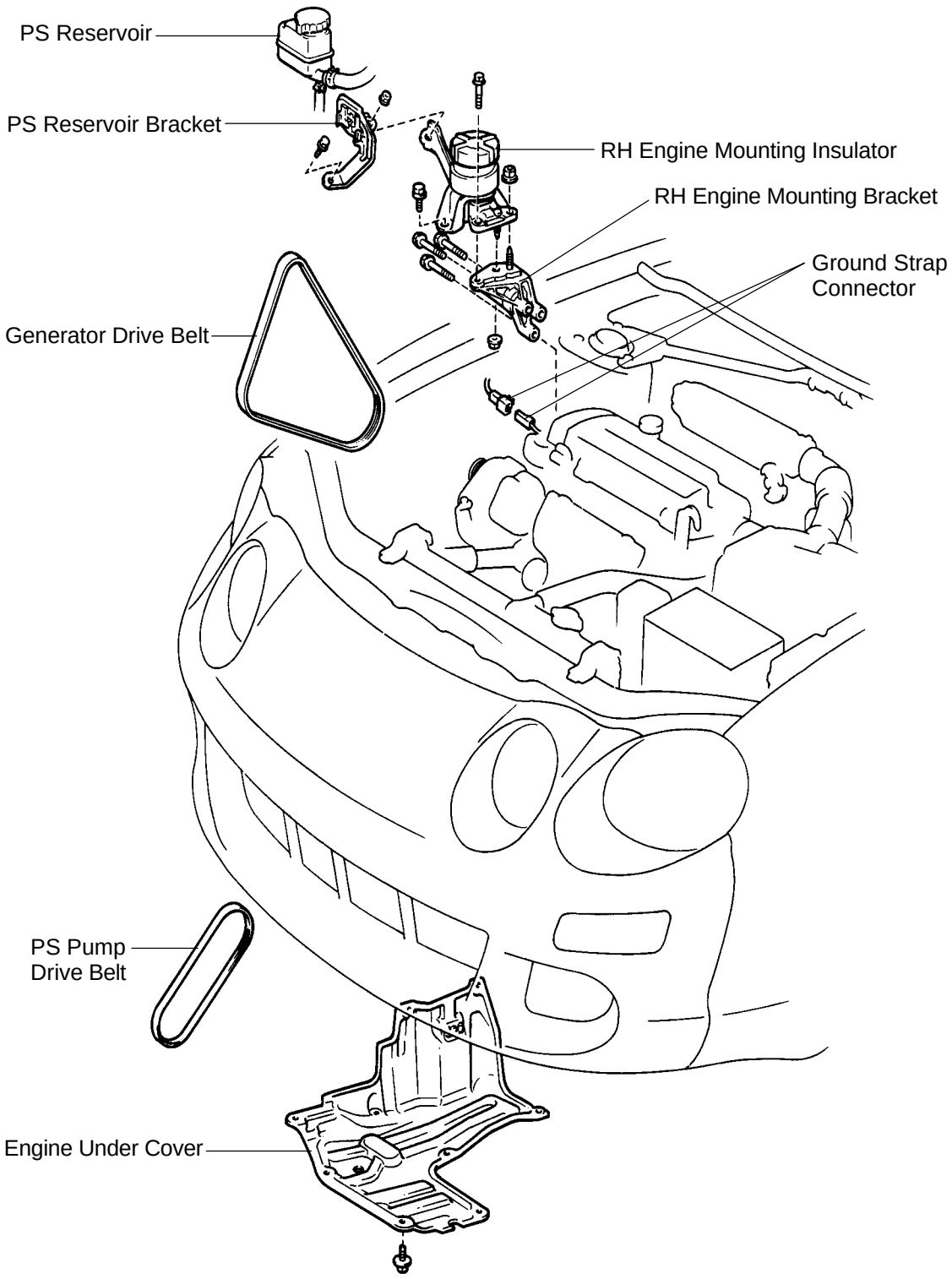

S01704

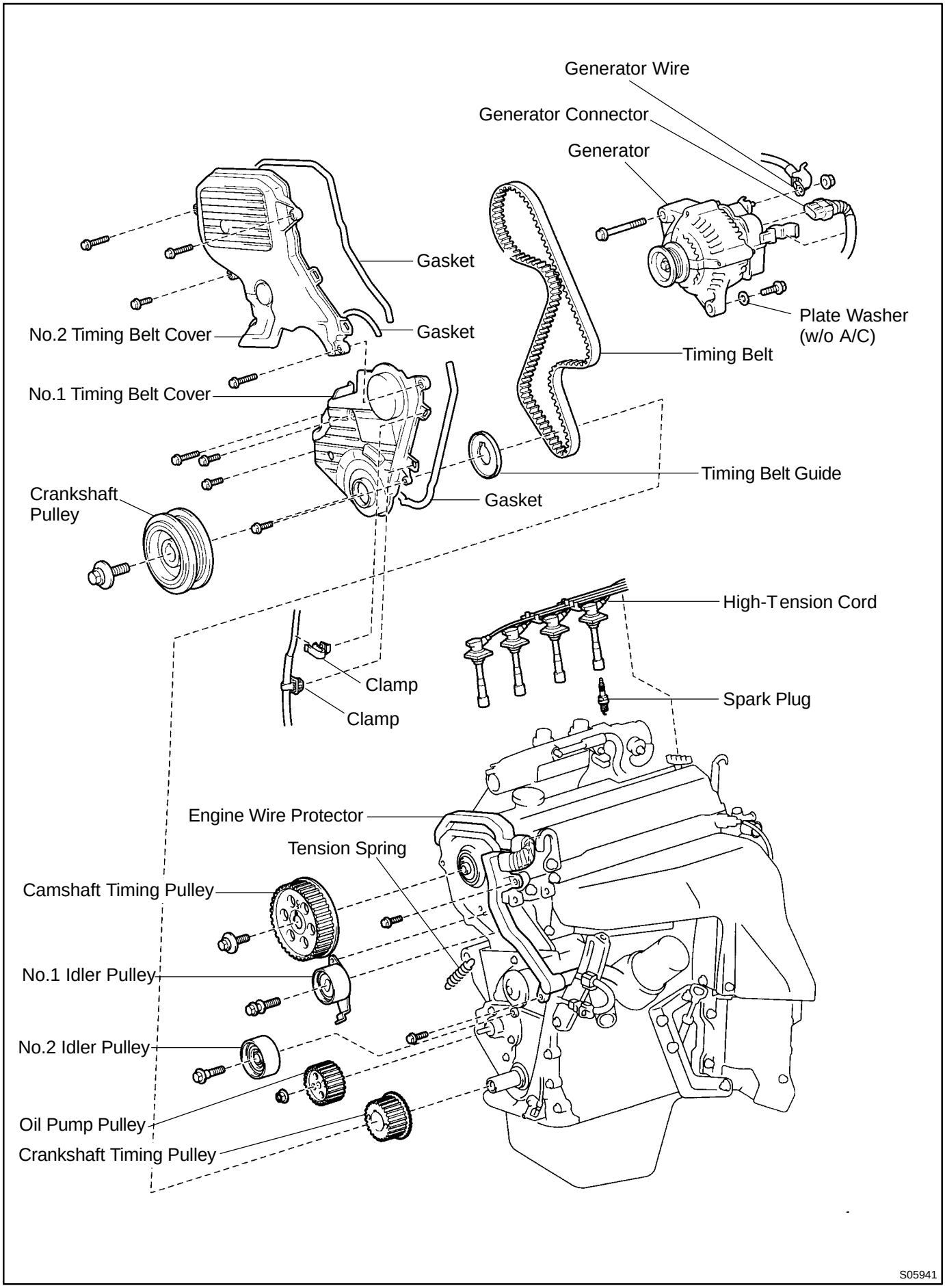
Generator Wire
Generator Connector
Generator
Gasket
No.2 Timing Belt Cover
Gasket
Timing Belt
Plate Washer
(w/o A/C)
No.1 Timing Belt Cover
Timing Belt Guide
Crankshaft
Pulley
Gasket
High-Tension Cord
Clamp
Clamp
Spark Plug
Engine Wire Protector
Tension Spring
Camshaft Timing Pulley
No.1 Idler Pulley
No.2 Idler Pulley
Oil Pump Pulley
Crankshaft Timing Pulley
S05941

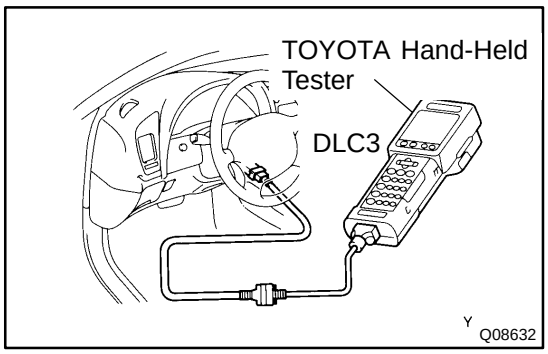

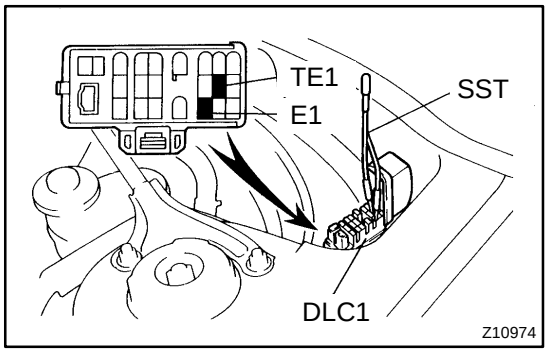

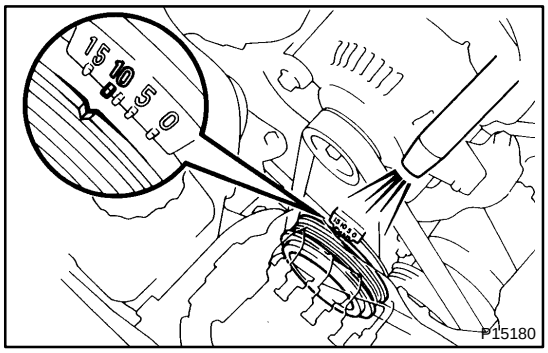

IGNITION TIMING

EM0J2-02

INSPECTION

1. WARM UP ENGINE

Allow the engine to warm up to normal operating temperature.

2. CONNECT TOYOTA HAND-HELD TESTER OR OBDII SCAN TOOL

(a) Remove the fuse cover on the instrument panel.

(b) Connect the TOYOTA hand-held tester or OBDII scan tool to the DLC3.

(c) Please refer to the TOYOTA hand-held tester or OBDII scan tool operator's manual for further details.

3. CONNECT TIMING LIGHT TO ENGINE

4. INSPECT IGNITION TIMING

(a) Using SST, connect terminals TE1 and E1 of the DLC1.
SST 09843-18020

HINT:

After engine rpm is kept at 1,000 - 1,300 rpm for 5 seconds, check that it returns to idle speed.

(b) Using a timing light, check the ignition timing.
Ignition timing:
8 - 12˚ BTDC @ idle
(Transmission in neutral position)

(c) Remove the SST from the DLC1.
SST 09843-18020

5. FURTHER CHECK IGNITION TIMING
Ignition timing:
0 - 10˚ BTDC @ idle
(Transmission in neutral position)

HINT:

The timing mark moves in a range between 0˚ and 10˚.

6. DISCONNECT TIMING LIGHT FROM ENGINE

7. DISCONNECT TOYOTA HAND- HELD TESTER OR OBDII SCAN TOOL

SF0V7-04

INSPECTION

1. INSPECT INJECTOR INJECTION

CAUTION:

Keep injector clean of sparks during the test.

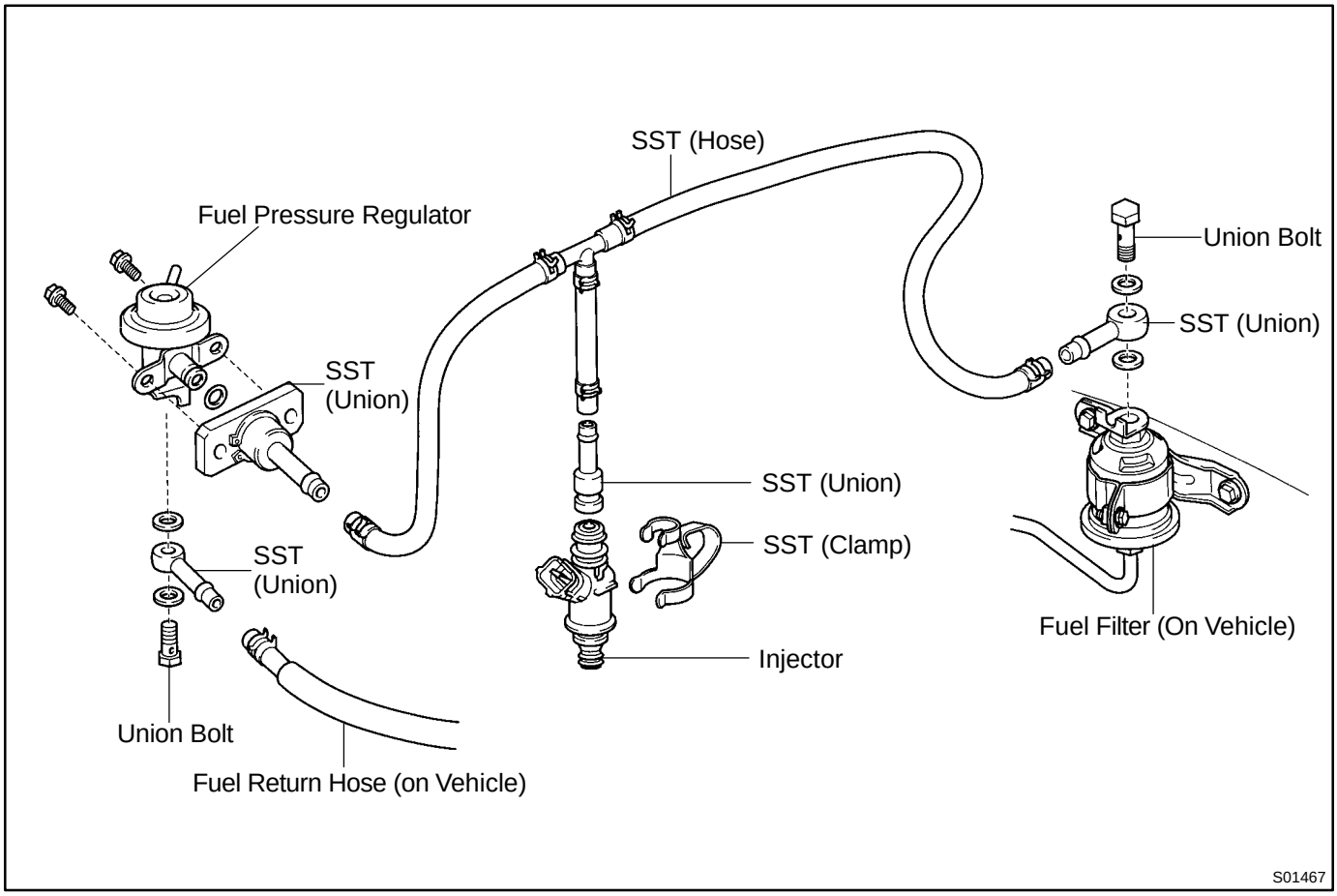

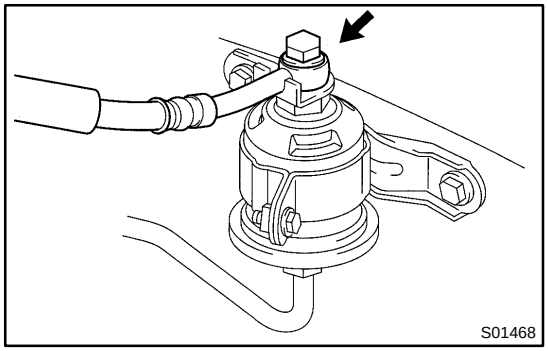

(a) Remove the union bolt and 2 gaskets, and disconnect the fuel inlet hose from the fuel filter outlet.

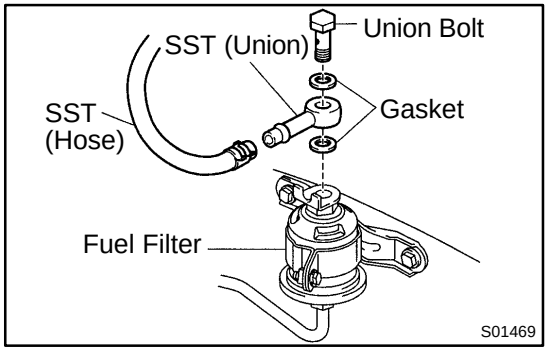

(b) Connect SST (union and hose) to the fuel filter outlet with the 2 gaskets and union bolts.
SST 09268-41046 (90405-09015)
Torque: 29 N·m (300 kgf·cm, 22 ft·lbf)

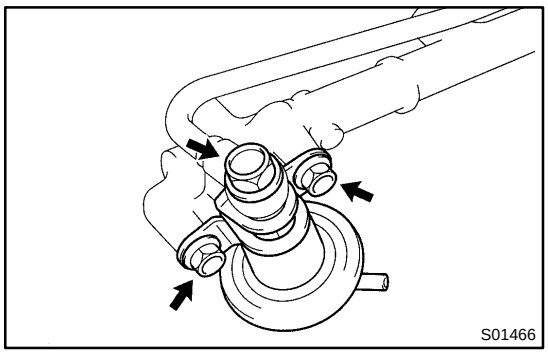

(c) Remove the pressure regulator from the delivery pipe. (See page SF-16)

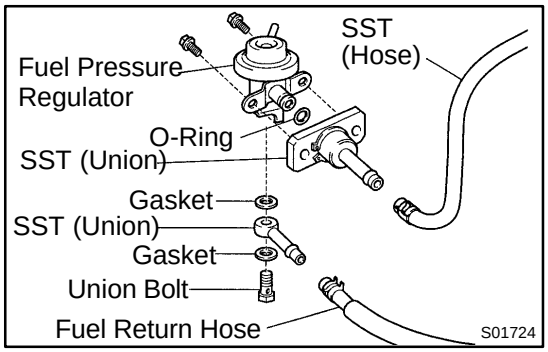

(d) Install the O-ring to the fuel inlet of pressure regulator.
(e) Connect SST (hose) to the fuel inlet of the pressure regulator with SST (union) and the 2 bolts.
SST 09268-41046 (09268-41091)
Torque: 5.4 N·m (55 kgf·cm, 48 ft·lbf)
(f) Connect the fuel return hose to the fuel outlet of the pressure regulator with SST (union), 2 gaskets and union bolt.
SST 09268-41046 (09268-41081)
Torque: 19 N·m (195 kgf·cm, 14 ft·lbf)
(g) Install the grommet and O-ring to the injector.
(h) Connect SST (union and hose) to the injector, and hold the injector and union with SST (clamp).
SST 09268-41046
(i) Put the injector into the graduated cylinder.

CAUTION:
Install a suitable vinyl hose onto the injector to prevent gasoline from splashing out.

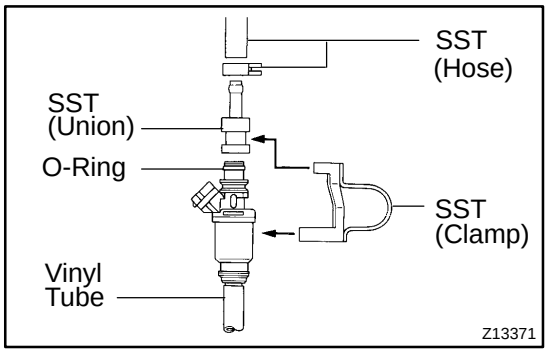

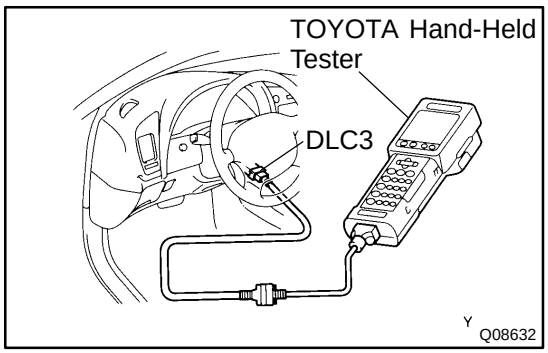

(j) Connect the TOYOTA hand-held tester to the DLC3.
(k) Connect the battery negative (-) cable to the battery.
(l) Turn the ignition switch ON and TOYOTA hand-held tester main switch ON.

NOTICE:
Do not start the engine.

(m) Select the active test mode on the TOYOTA hand-held tester.
(n) Please refer to the TOYOTA hand-held tester operator's manual for further details.
(o) If you have no TOYOTA hand-held tester, connect the positive (+) and negative (-) leads from the battery to the fuel pump connector.
(See page SF-6)

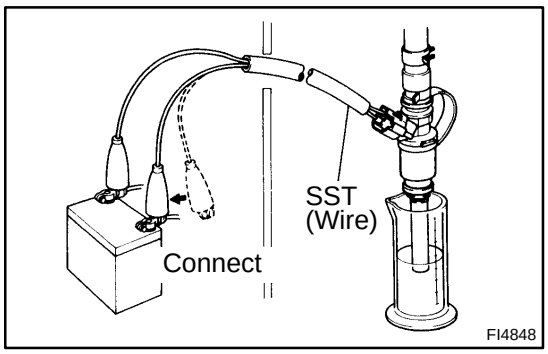

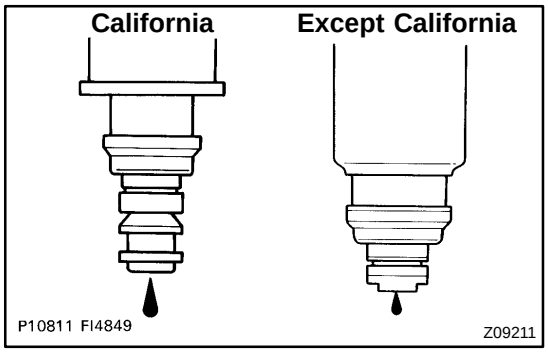

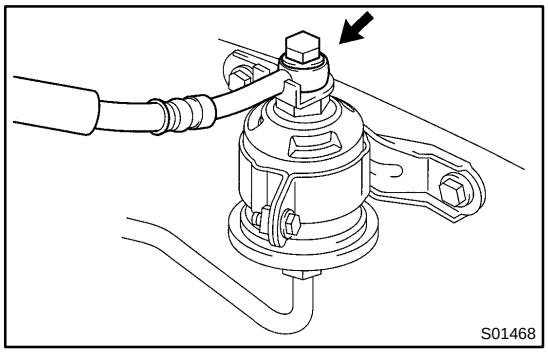

(p) Connect SST (wire) to the injector and battery for 15 seconds, and measure the injection volume with a graduated cylinder. Test each injector 2 or 3 times.
SST 09842-30070
Volume: 51 - 64 cm^3 (3.1 - 3.9 cu in.) per 15 seconds
Difference between each injector:
5 cm^3 (0.3 cu in.) or less

If the injection volume is not as specified, replace the injector.

2. INSPECT LEAKAGE

(a) In the condition above, disconnect the tester probes of SST (wire) from the battery and check the fuel leakage from the injector.
SST 09842-30070
Fuel drop: One drop or less per minute

(b) Turn the ignition switch OFF.

(c) Disconnect the negative (-) terminal cable from the battery.

(d) Remove the SST.
SST 09268-41046, 09842-30070

(e) Reinstall the pressure regulator to the delivery pipe.
(See page SF-17)

(f) Reconnect the fuel inlet hose to the fuel filter outlet with 2 new gaskets and the union bolt.
Torque: 29 N·m (300 kgf·cm, 22 ft·lbf)

(g) Disconnect the TOYOTA hand-held tester from the DLC3.

SF0VY-02

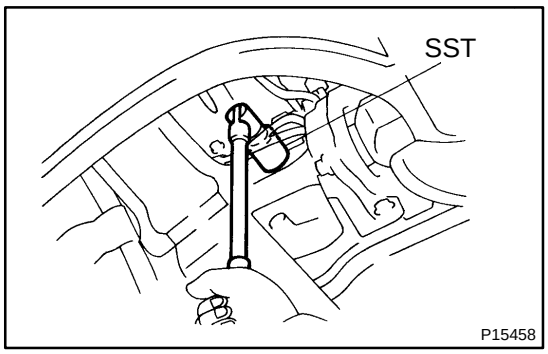

INSPECTION

1. REMOVE KNOCK SENSOR 1

(a) Disconnect the knock sensor connector.

(b) Using SST, remove the knock sensor.

SST 09816-30010

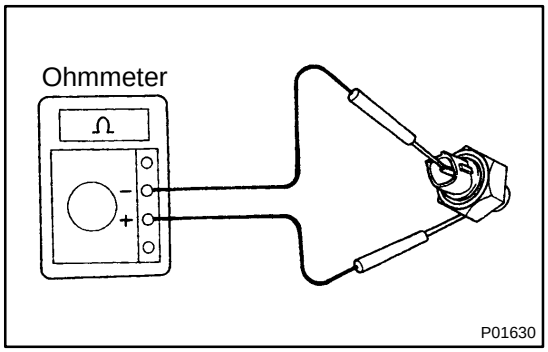

2. INSPECT KNOCK SENSOR 1

Using an ohmmeter, check that there is no continuity between the terminal and body.

If there is continuity, replace the sensor.

3. REINSTALL KNOCK SENSOR 1

(a) Using SST, install the knock sensor.

SST 09816-30010

Torque: 44 N·m (450 kgf·cm, 33 ft·lbf)

(b) Connect the knock sensor connector.

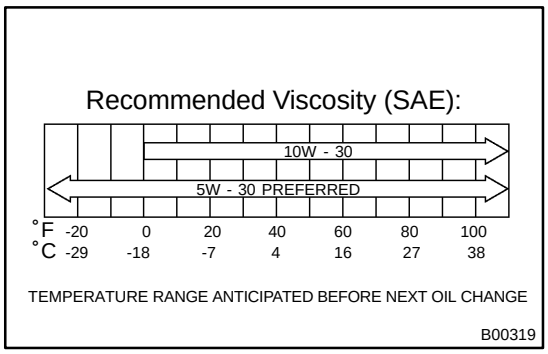

OIL AND FILTER

LU07W-04

INSPECTION

1. CHECK ENGINE OIL QUALITY

Check the oil for deterioration, entry of water, discoloring or thinning.

If the quality is visibly poor, replace the oil.

Oil grade:

API grade or SH Energy-Conserving II or multigrade engine oil or ILSAC multigrade engine oil. Recommended viscosity is as shown in the illustration.

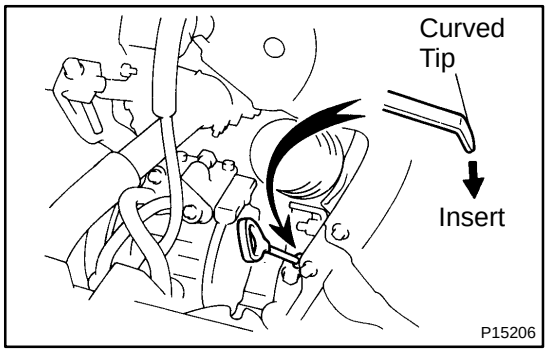

2. CHECK ENGINE OIL LEVEL

The oil level should be between the "L" and "F" marks on the dipstick.

If low, check for leakage and add oil up to "F" mark.

NOTICE:

- **When inserting the oil dipstick, insert the curved tip of the dipstick facing the same direction as the curve of the guide.**
- **If the dipstick gets caught while inserting it, do not force it in. Reconfirm the direction of the dipstick.**

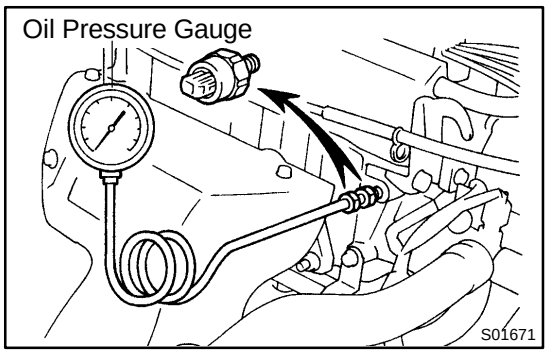

3. REMOVE OIL PRESSURE SWITCH, AND INSTALL OIL PRESSURE GAUGE

4. WARM UP ENGINE

Allow the engine to warm up to normal operating temperature.

5. CHECK OIL PRESSURE

Oil pressure:

At idle	29 kPa (0.3 kgf/cm^2, 4.3 psi) or more
At 3,000 rpm	245 - 490 kPa (2.5 - 5.0 kgf/cm^2, 36 - 71 psi)

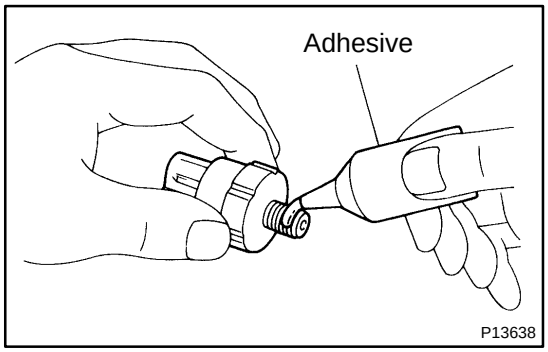

6. REMOVE OIL PRESSURE GAUGE, AND REINSTALL OIL PRESSURE SWITCH

(a) Remove the oil pressure gauge.

(b) Apply adhesive to 2 or 3 threads of the oil pressure switch.

Adhesive:

Part No. 08833-00080, THREE BOND 1344, LOCTITE 242 or equivalent

(c) Reinstall the oil pressure switch.

7. START ENGINE, AND CHECK FOR OIL LEAKS

LU0O9-01

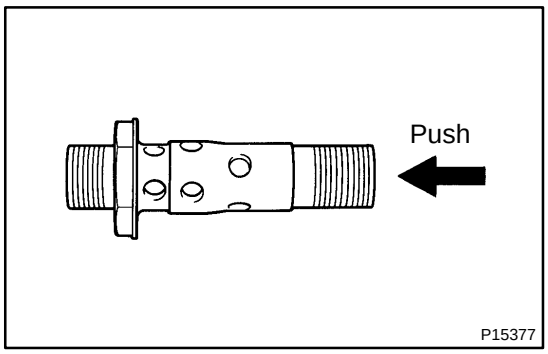

INSPECTION

1. INSPECT RELIEF VALVE

Push the with a wooden stick to check if it is stuck.
If stuck, replace the relief valve.

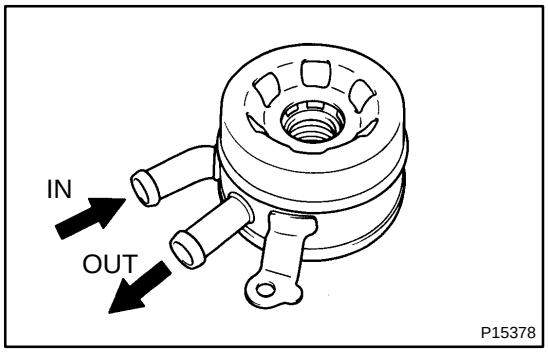

2. INSPECT OIL COOLER

Check the oil cooler for damage or clogging.
If necessary, replace the oil cooler.

LU081-01

INSPECTION

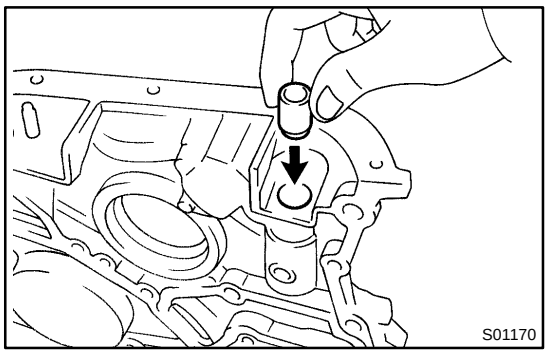

1. INSPECT RELIEF VALVE

Coat the valve with engine oil and check that it falls smoothly into the valve hole by its own weight.

If it doesn't, replace the relief valve. If necessary, replace the oil pump assembly.

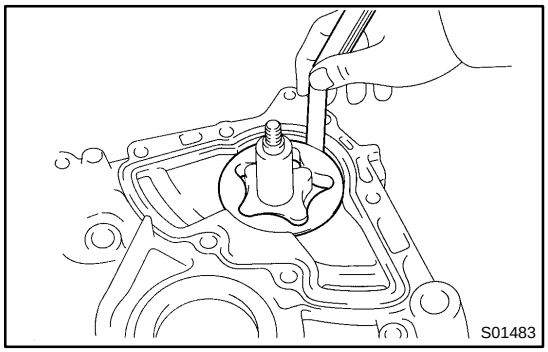

2. INSPECT ROTORS FOR BODY CLEARANCE

Using a feeler gauge, measure the clearance between the driven rotor and body.

Standard body clearance:
0.10 - 0.16 mm (0.0039 - 0.0063 in.)
Maximum body clearance:
0.20 mm (0.0079 in.)

If the body clearance is greater than maximum, replace the rotors as a set. If necessary, replace the oil pump assembly.

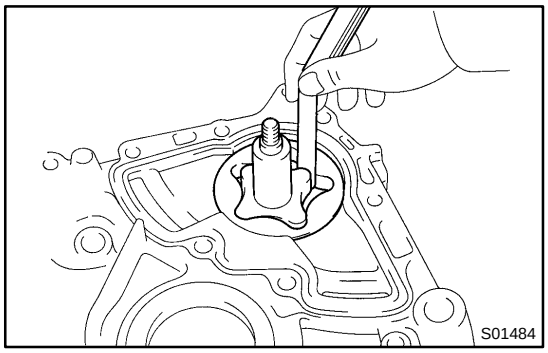

3. INSPECT ROTORS FOR TIP CLEARANCE

Using a feeler gauge, measure the clearance between the drive and driven rotor tips.

Standard tip clearance:
0.04 - 0.16 mm (0.0016 - 0.0063 in.)
Maximum tip clearance:
0.20 mm (0.0079 in.)

If the tip clearance is greater than maximum, replace the rotors as a set.

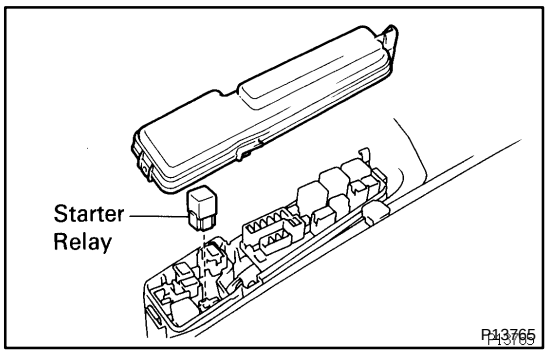

STARTER RELAY

ST07X-03

INSPECTION

1. REMOVE STARTER RELAY (Marking: ST)

LOCATION: In the engine compartment relay box.

Remove the relay box cover and starter relay.

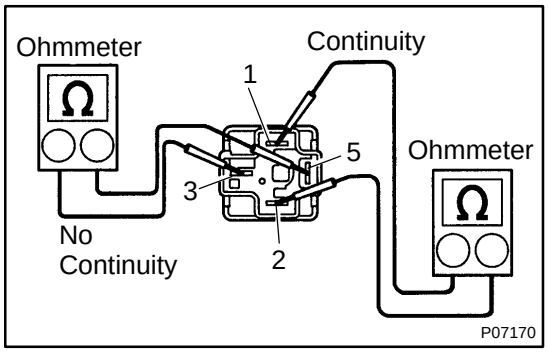

2. INSPECT RELAY CONTINUITY

(a) Using an ohmmeter, check that there is continuity between terminals 1 and 2.

If there is no continuity, replace the relay.

(b) Check that there is no continuity between terminals 3 and 5.

If there is continuity, replace the relay.

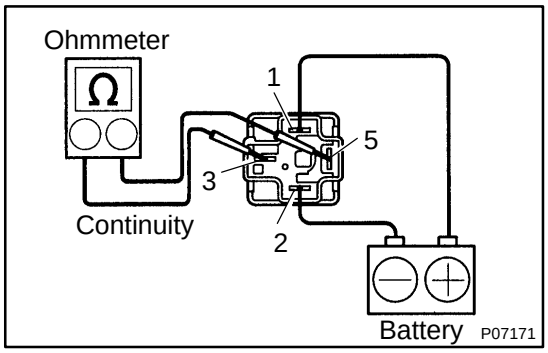

3. INSPECT RELAY OPERATION

(a) Apply battery voltage across terminals 1 and 2.

(b) Using an ohmmeter, check that there is continuity between terminals 3 and 5.

If operatioin is not as specified, replace the relay.

4. REINSTALL STARTER RELAY

ST07S-03

INSPECTION

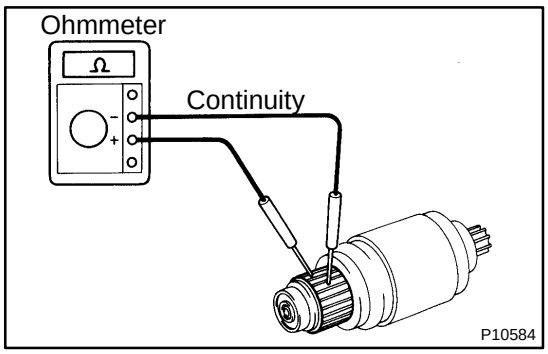

1. INSPECT COMMUTATOR FOR OPEN CIRCUIT

Using an ohmmeter, check that there is continuity between the segments of the commutator.

If there is no continuity between any segment, replace the armature.

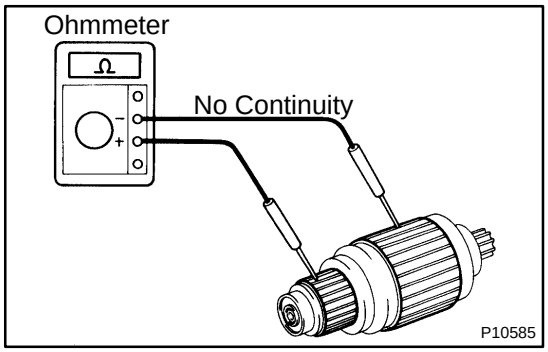

2. INSPECT COMMUTATOR FOR GROUND

Using an ohmmeter, check that there is no continuity between the commutator and armature coil core.

If there is continuity, replace the armature.

3. INSPECT COMMUTATOR FOR DIRTY AND BURNT SURFACES

If the surface is dirty or burnt, correct it with sandpaper (No.400) or on a lathe.

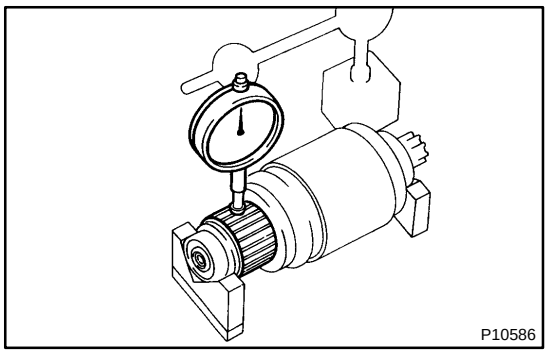

4. INSPECT COMMUTATOR CIRCLE RUNOUT

(a) Place the commutator on V-blocks.

(b) Using a dial gauge, measure the circle runout.

Maximum circle runout:
0.05 mm (0.0020 in.)

If the circle runout is greater than maximum, correct it on a lathe.

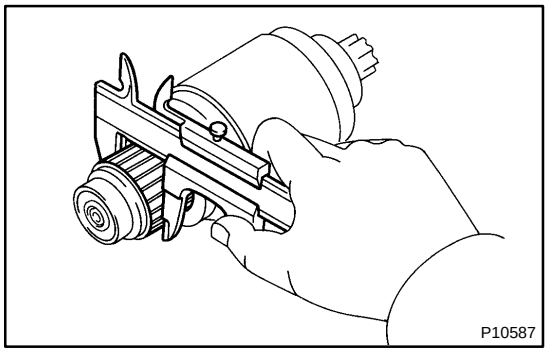

5. INSPECT COMMUTATOR DIAMETER

Using a vernier caliper, measure the commutator diameter.

Standard diameter:
30.0 mm (1.181 in.)
Minimum diameter:
29.0 mm (1.142 in.)

If the diameter is less than minimum, replace the armature.

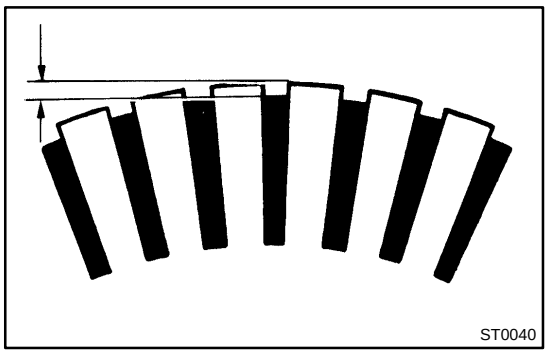

6. INSPECT UNDERCUT DEPTH

Check that the undercut depth is clean and free of foreign materials. Smooth out the edge.

Standard undercut depth:
0.6 mm (0.024 in.)
Minimum undercut depth:
0.2 mm (0.008 in.)

If the undercut depth is less than minimum, correct it with a hacksaw blade.

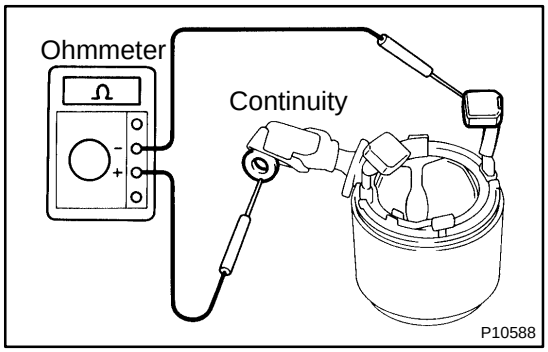

7. INSPECT FIELD COIL FOR OPEN CIRCUIT

Using an ohmmeter, check that there is continuity between the lead wire and field coil brush lead.
If there is no continuity, replace the field frame.

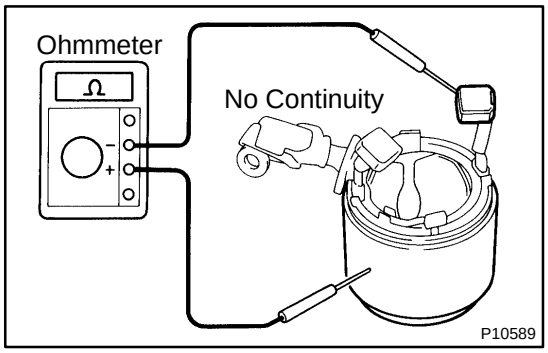

8. INSPECT FIELD COIL FOR GROUND

Using an ohmmeter, check that there is no continuity between the field coil end and field frame.
If there is continuity, repair or replace the field frame.

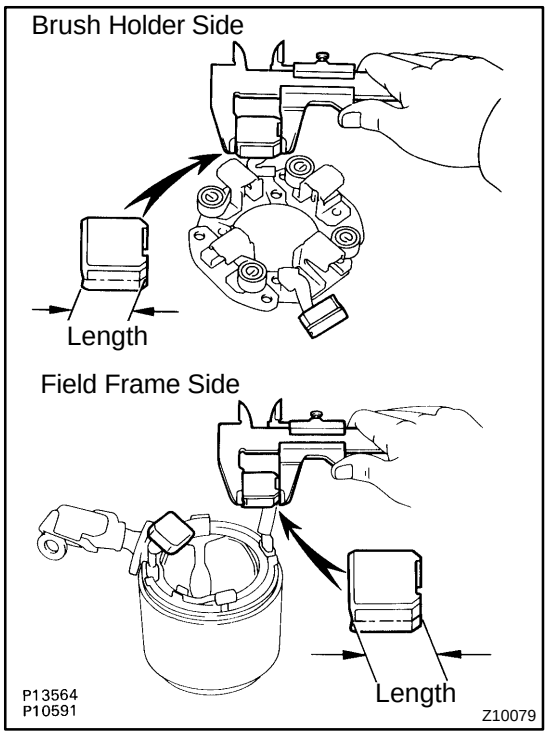

9. INSPECT BRUSH LENGTH

Using a vernier caliper, measure the brush length.

Standard length:
15.0 mm (0.591 in.)
Minimum length:
8.0 mm (0.315 in.)

If the length is less than minimum, replace the brush holder and field frame.

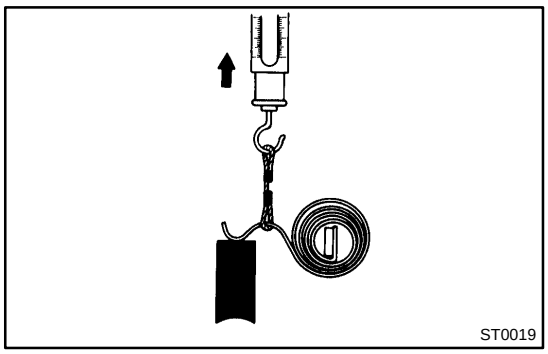

10. INSPECT BRUSH SPRING LOAD

Take the pull scale reading the instant the brush spring separates from the brush.

Standard spring installed load:
17.6 - 23.5 N (1.8 - 2.4 kgf, 3.9 - 5.3 lbf)
Minimum spring installed load:
11.8 N (1.2 kgf, 2.6 lbf)

If the installed load is less than minimum, replace the brush springs.

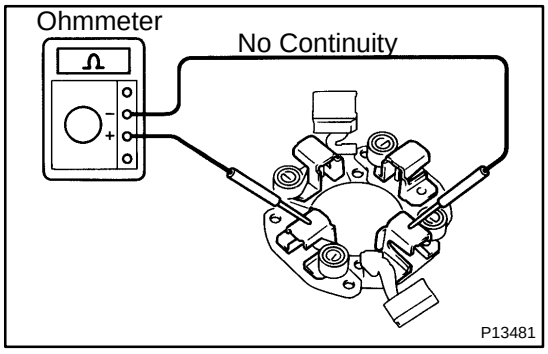

11. INSPECT BRUSH HOLDER INSULATION

Using an ohmmeter, check that there is no continuity between the positive (+) and negative (-) brush holders.
If there is continuity, repair or replace the brush holder.

12. INSPECT GEAR TEETH

Check the gear teeth on the pinion gear, idler gear and clutch assembly for wear or damage.
If damaged, replace the gear or clutch assembly.
If damaged, also check the drive plate ring gear for wear or damage.

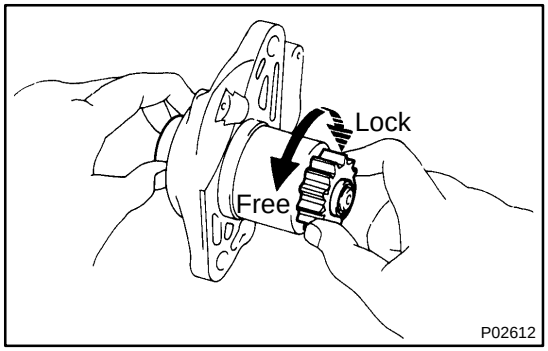

13. INSPECT CLUTCH PINION GEAR

Hold the starter clutch and rotate the pinion gear counterclockwise, and check that it turns freely. Try to rotate the pinion gear clockwise and check that it locks.
If necessary, replace the clutch assembly.

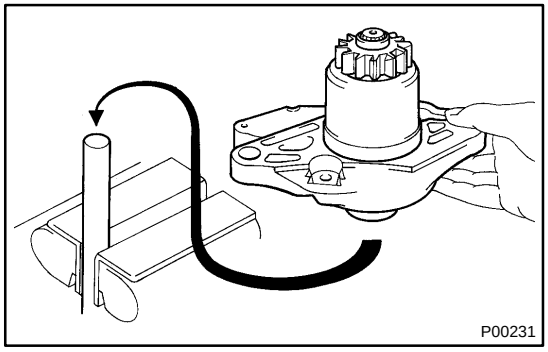

14. IF NECESSARY, REPLACE CLUTCH ASSEMBLY

(a) Disassembly of starter housing and clutch assembly
  (1) Mount a brass bar in a vise, and install the starter housing and clutch assembly to the brass bar.

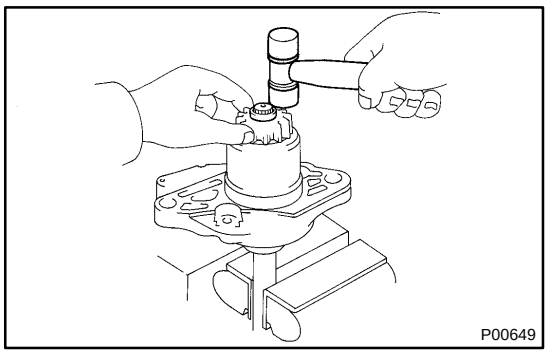

(2) Push down the pinion gear.
(3) Using a plastic-faced hammer, tap down the stop collar.

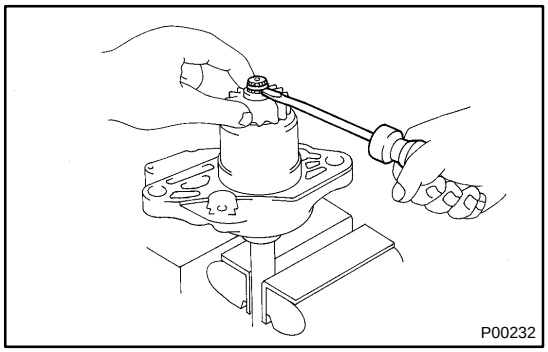

(4) Using a screwdriver, pry out the snap ring.

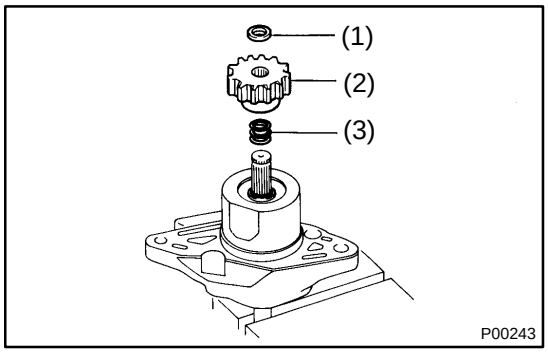

(5) Remove these parts:
- Stop collar
- Pinion gear
- Compression spring

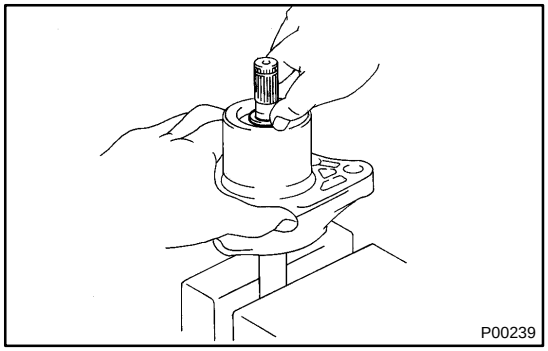

(6) Push down the starter housing, and remove the spring retainer.

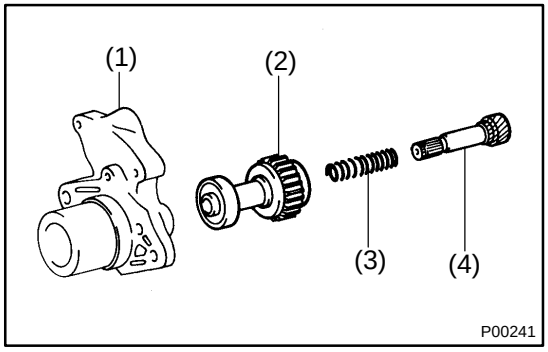

(7) Disassemble these parts:
- Starter housing
- Starter clutch
- Compression spring
- Clutch shaft

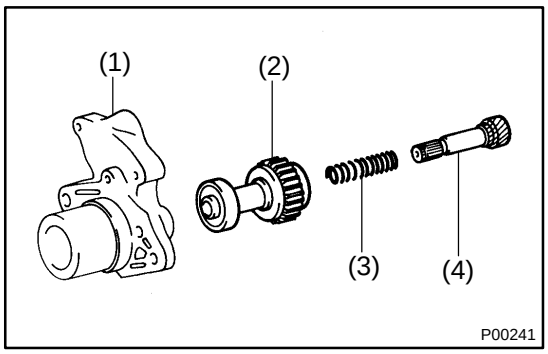

(b) Assemble starter housing and clutch assembly
(1) Assemble these parts:
- Starter housing
- Starter clutch
- Compression spring
- Clutch shaft

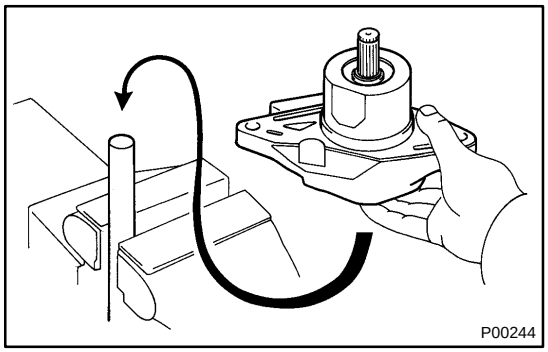

(2) Mount a brass bar in a vise, install the starter housing and clutch assembly to the brass bar.

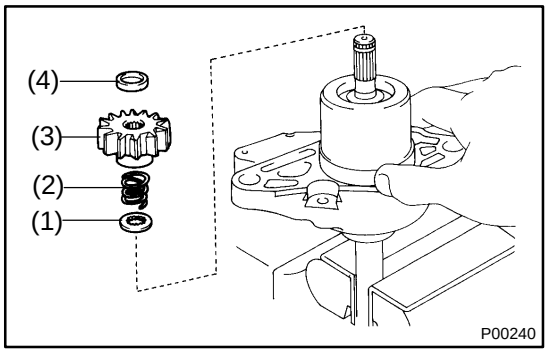

(3) Push down the starter housing, and install these parts:
- Spring retainer
- Compression spring
- Pinion gear
- Stop collar

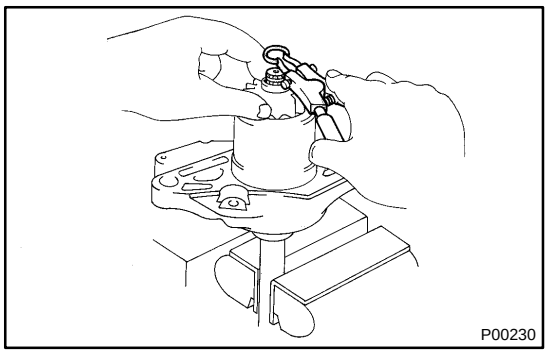

(4) Push down the pinion gear.
(5) Using snap ring pliers, install a new snap ring.

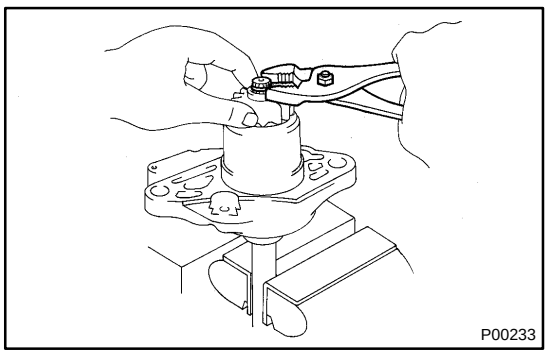

(6) Using pliers, compress the snap ring.
(7) Check that the snap ring fits correctly.

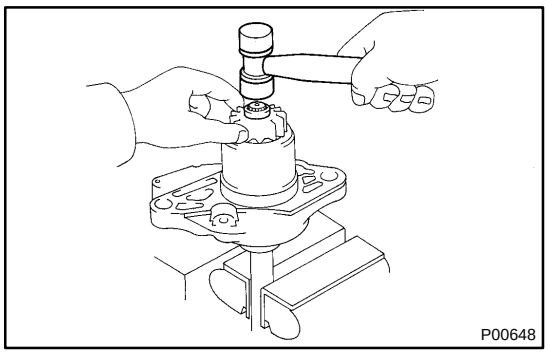

(8) Remove the starter housing and clutch assembly from the brass bar.
(9) Using a plastic-faced hammer, tap the clutch shaft and install the stop collar onto the snap ring.

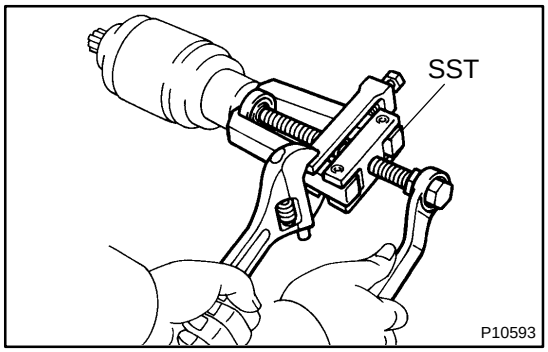

15. INSPECT REAR BEARINGS

Turn each bearing by hand while applying inward force.
If resistance is felt or the bearing sticks, replace the bearing.

16. IF NECESSARY, REPLACE REAR BEARING

(a) Using SST, remove the bearing.
SST 09286-4601 1

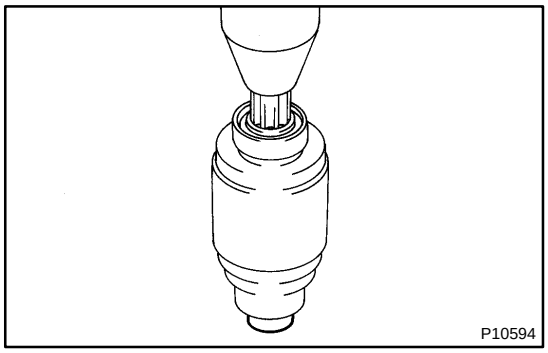

(b) Using a press, press in a new front bearing.

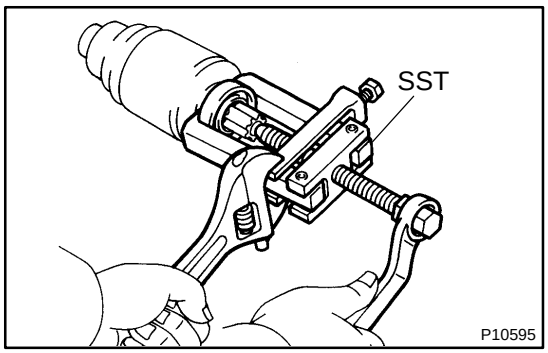

17. INSPECT FRONT BEARING

Turn each bearing by hand while applying inward force.
If resistance is felt or the bearing sticks, replace the bearing.

18. IF NECESSARY, REPLACE FRONT BEARING

(a) Using SST, remove the bearing.
SST 09286-4601 1

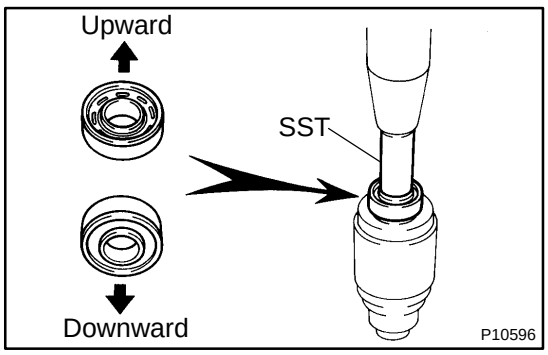

(b) Using SST and a press, press in a new bearing.

NOTICE:

Be careful of the bearing installation direction.

SST 09820-00030

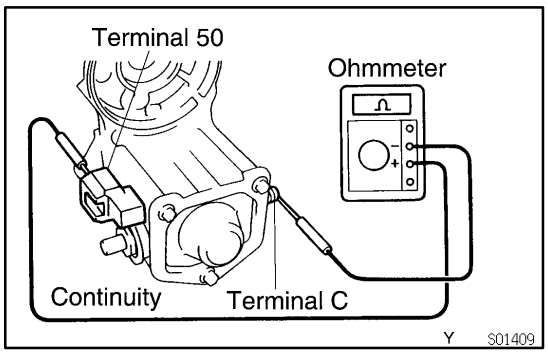

19. DO PULL-IN COIL OPEN CIRCUIT TEST

Using an ohmmeter, check that there is continuity between terminals 50 and C.

If there is no continuity, check and replace the magnetic switch.

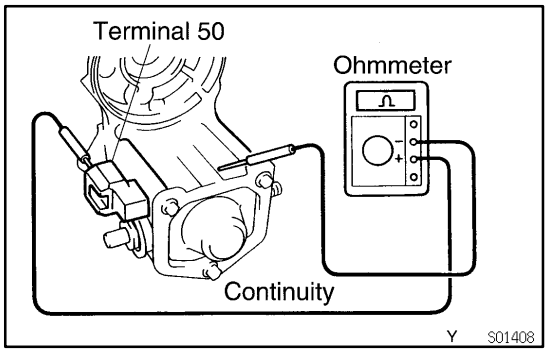

20. DO HOLD-IN COIL OPEN CIRCUIT TEST

Using an ohmmeter, check that there is continuity between terminal 50 and the switch body.

If there is no continuity, replace the magnetic switch.

EC0K3-01

INSPECTION

1. **DRAIN ENGINE COOLANT**
2. **REMOVE WATER OUTLET (See page EM-29)**
3. **REMOVE TVV FROM WATER OUTLET**

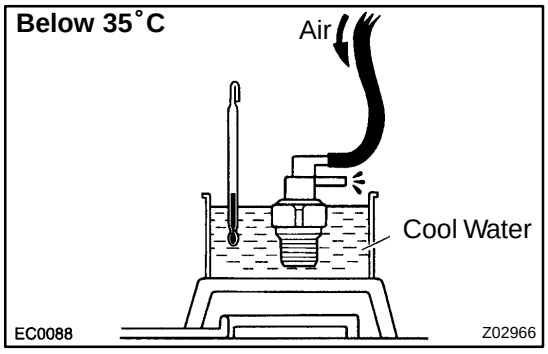

4. **INSPECT TVV OPERATION**

(a) Cool the TVV to below 35˚C (95˚F) with cool water.

(b) Check that air does not flow from the upper port to lower port.

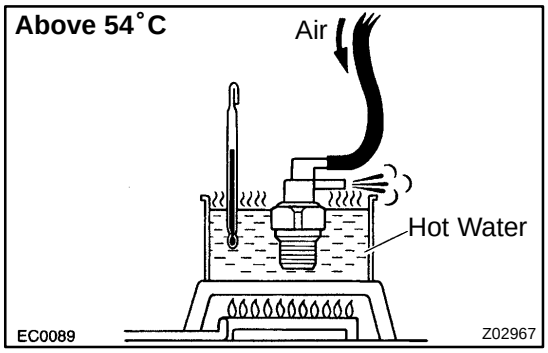

(c) Heat the TVV to above 54˚C (129˚F) with hot water.

(d) Check that air flows from the upper port to lower port.

If operation is not as specified, replace the TVV.

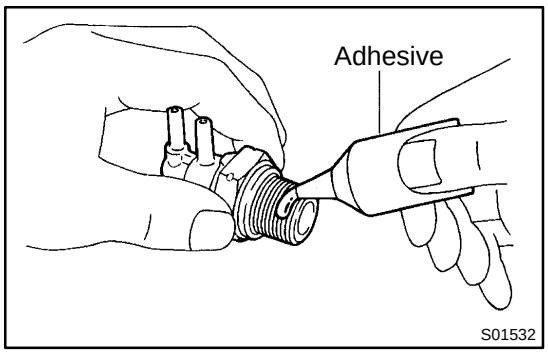

5. **REINSTALL TVV WATER OUTLET**

(a) Apply adhesive to 2 or 3 threads of the TVV, and install it.

Adhesive:
Part No. 08833-00070, THREE BOND 1324 or equivalent

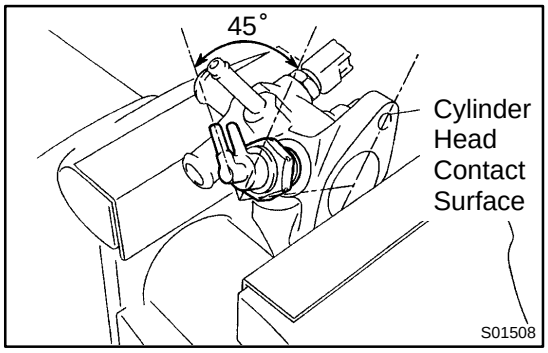

(b) Install the TVV with the port faces in the direction indicated in the illustration.

Torque:29 N·m (300 kgf·cm, 22 ft·lbf)

6. **REINSTALL WATER OUTLET (See page EM-53)**
7. **REFILL WITH ENGINE COOLANT**

CO0GF-02

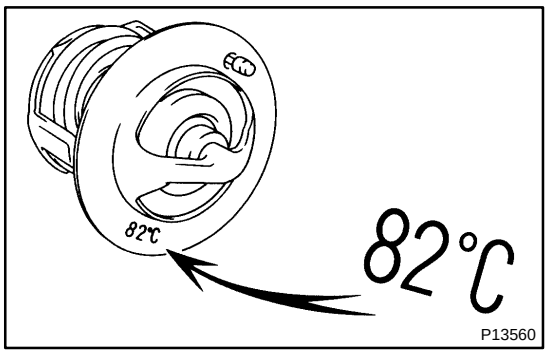

INSPECTION

INSPECT THERMOSTAT

HINT:

The thermostat is numbered with the valve opening temperature.

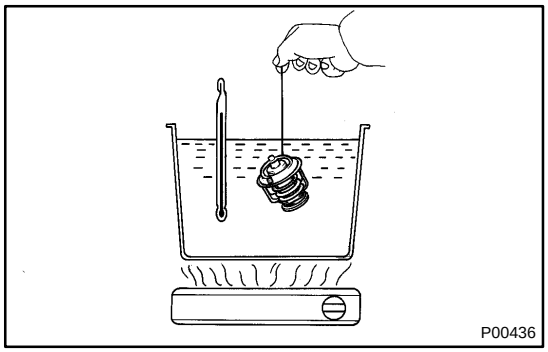

(a) Immerse the thermostat in water and gradually heat the water.

(b) Check the valve opening temperature.

Valve opening temperature:

80 - 84˚C (176 - 183˚F)

If the valve opening temperature is not as specified, replace the thermostat.

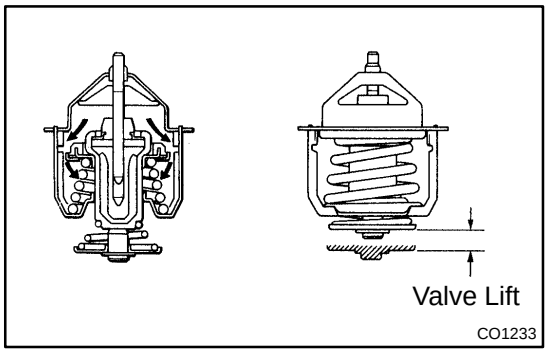

(c) Check the valve lift.

Valve lift:

At 95˚C (203˚F) 8 mm (0.31 in.) or more

If the valve lift is not as specified, replace the thermostat.

(d) Check that the valve is fully closed when the thermostat is at low temperatures (below 40˚C (104˚F)).

If not closed, replace the thermostat.

SF0VF-02

INSPECTION

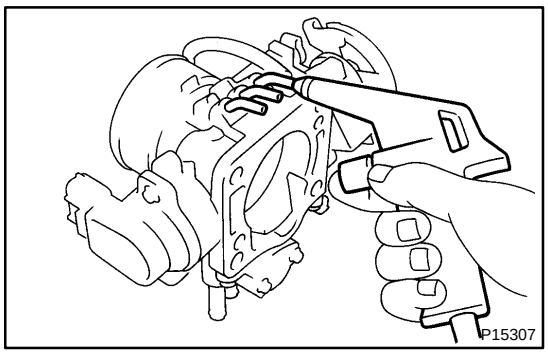

1. CLEAN THROTTLE BODY

(a) Using a soft brush and carburetor cleaner, clean the cast parts.

(b) Using compressed air, clean all the passages and apertures.

NOTICE:

To prevent deterioration, do not clean the throttle position sensor and throttle opener.

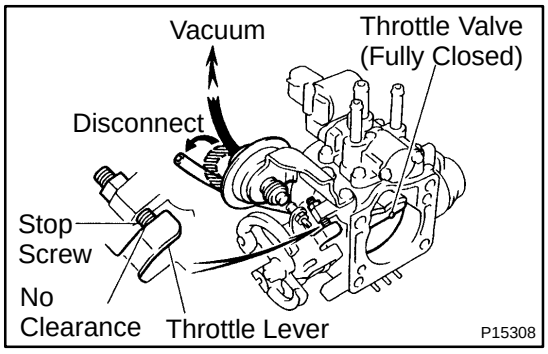

2. INSPECT THROTTLE VALVE

(a) Disconnect the throttle opener vacuum hose from the throttle body.

(b) Apply vacuum to the throttle opener.

(c) Check that there is no clearance between the throttle stop screw and throttle lever when the throttle valve is fully closed.

(d) Reconnect the throttle opener vacuum hose to the throttle body.

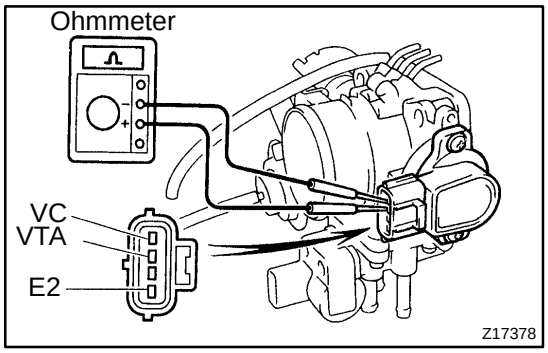

3. INSPECT THROTTLE POSITION SENSOR

(a) Apply vacuum to the throttle opener.

(b) Using an ohmmeter, measure the resistance between each terminal.

Clearance between lever and stop screw	Between terminals	Resistance
0 mm (0 in.)	VTA - E2	0.2 - 5.7 kΩ
Throttle valve fully open	VTA - E2	2.0 - 10.2 kΩ
-	VC - E2	2.5 - 5.9 kΩ

4. IF NECESSARY, ADJUST THROTTLE POSITION SENSOR

(a) Loosen the 2 set screws of the sensor.

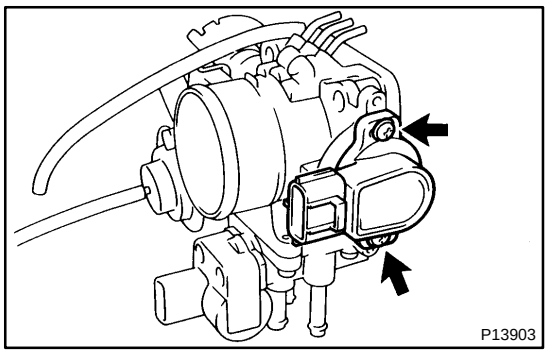

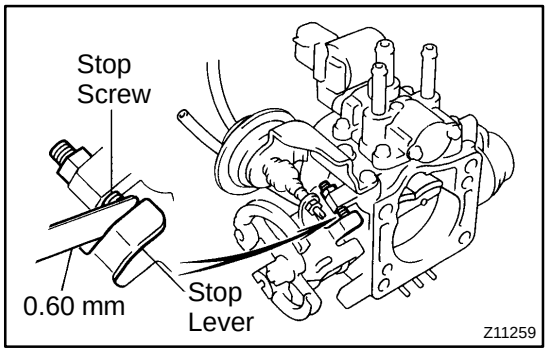

(b) Insert a 0.60 mm (0.024 in.) feeler gauge between the throttle stop screw and stop lever.

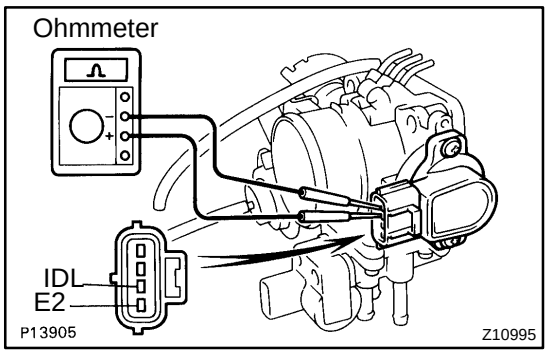

(c) Connect the tester probe of an ohmmeter to the terminals IDL and E2 of the sensor.

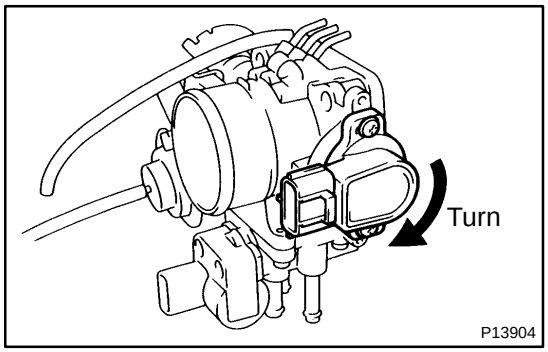

(d) Gradually turn the sensor clockwise until the ohmmeter deflects, and secure it with the 2 set screws.

(e) Recheck the continuity between terminals IDL and E2.

Clearance between lever and stop screw	Continuity (IDL - E2)
0.50 mm (0.020 in.)	Continuity
0.70 mm (0.028 in.)	No continuity

EM0J5-01

INSPECTION

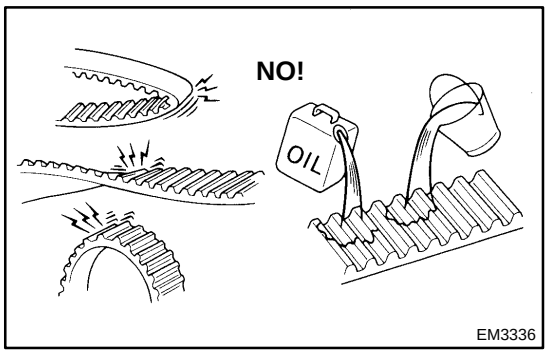

1. INSPECT TIMING BELT

NOTICE:

- **Do not bend, twist or turn the timing belt inside out.**
- **Do not allow the timing belt to come into contact with oil, water or steam.**
- **Do not utilize timing belt tension when installing or removing the mounting bolt of the camshaft timing pulley.**

If there are any defects as shown in the illustration, check the following points:

(a) Premature parting
- Check for proper installation.
- Check the timing cover gasket for damage and proper installation.

(b) If the belt teeth are cracked or damaged, check to see if either camshaft or water pump is locked.

(c) If there is noticeable wear or cracks on the belt face, check to see if there are nicks on the side of the idler pulley lock.

(d) If there is wear or damage on only one side of the belt, check the belt guide and the alignment of each pulley.

(e) If there is noticeable wear on the belt teeth, check the timing cover for damage and check gasket has been installed correctly and for foreign material on the pulley teeth.

If necessary, replace the timing belt.

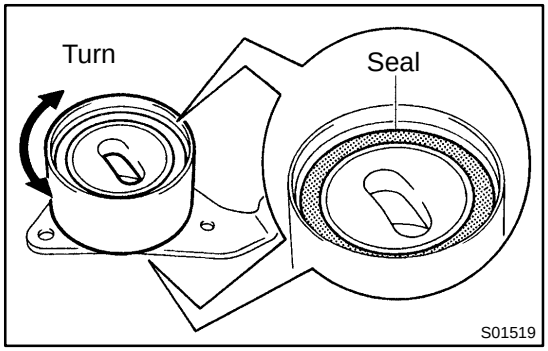

2. INSPECT IDLER PULLEYS

(a) Visually check the seal portion of the idler pulley for oil leakage.

If leakage is found, replace the idler pulley.

(b) Check that the idler pulley turns smoothly.

If necessary, replace the idler pulley.

3. INSPECT TENSION SPRING

(a) Measure the free length of tension spring.

Free length:
46.0 mm (1.811 in.)

If the free length is not as specified, replace the tension spring.

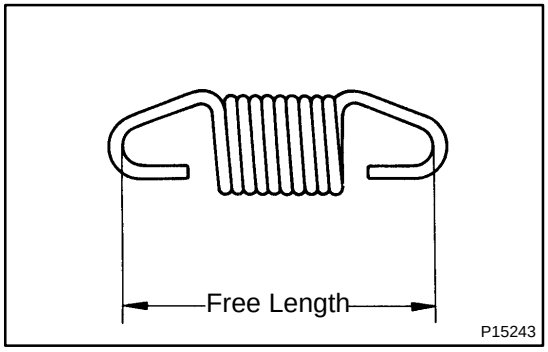

(b) Measure the tension of the tension spring at the specified installed length.

Installed tension (at 50.5 mm (1.988 in.)):
32 - 37 N (3.25 - 3.75 kgf, 7.2 - 8.3 lbf)

If the installed tension is not as specified, replace the tension spring.

VALVE CLEARANCE

INSPECTION

EM0J1-03

HINT:

Inspect and adjust the valve clearance when the engine is cold.

1. REMOVE CYLINDER HEAD COVER

(a) Disconnect the 4 high-tension cords from the clamp on the cylinder head cover.

(b) Disconnect the 4 high-tension cords from the spark plugs.

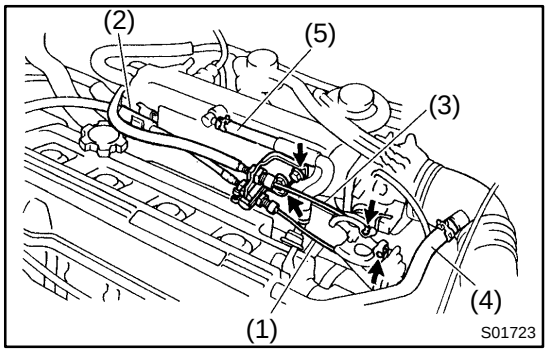

(c) Disconnect these cables and hoses:
- (1) Accelerator cable from throttle body
- (2) Accelerator cable from clamp on intake manifold
- (3) A/T throttle control cable from throttle body
- (4) PCV hose from air cleaner hose
- (5) PCV hose from intake manifold

(d) Remove the 2 bolts, and disconnect the cable bracket from the intake manifold.

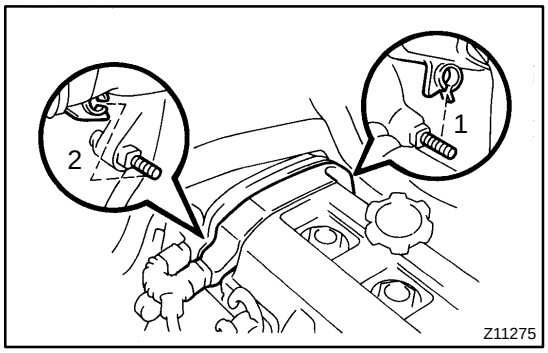

(e) Disconnect the engine wire protector from the 2 mounting bolts of the No.2 timing belt cover in the sequence shown.

(f) Remove the oil filler cap.

(g) Remove the cylinder head cover (See step EM-29).

2. SET NO.1 CYLINDER TO TDC/COMPRESSION

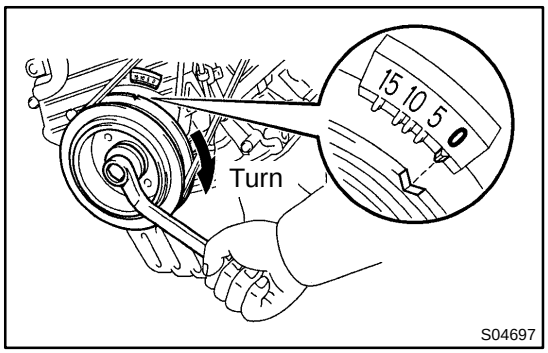

(a) Turn the crankshaft pulley, and align its groove with timing mark ”0” of the No.1 timing belt cover.

(b) Check that the valve lifters on the No.1 cylinder are loose and valve lifters on the No.4 are tight.

If not, turn the crankshaft one revolution (360˚) and align the mark as above.

3. INSPECT VALVE CLEARANCE

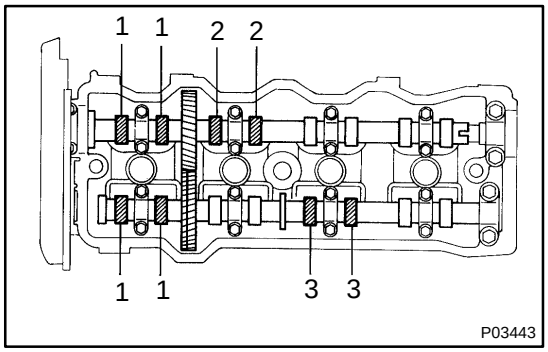

(a) Check only the valves indicated.
- Using a feeler gauge, measure the clearance between the valve lifter and camshaft.
- Record the out-of-specification valve clearance measurements. They will be used later to determine the required replacement adjusting shim.

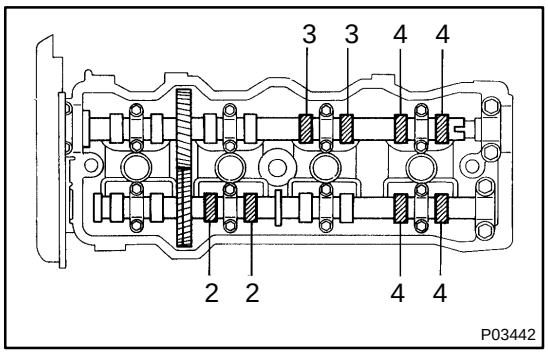

Valve clearance (Cold):

Intake	0.19 - 0.29 mm (0.007 - 0.011 in.)
Exhaust	0.28 - 0.38 mm (0.011 - 0.015 in.)

(b) Turn the crankshaft one revolution (360˚) and align the mark as above.

(c) Check only the valves indicated as shown. Measure the valve clearance.

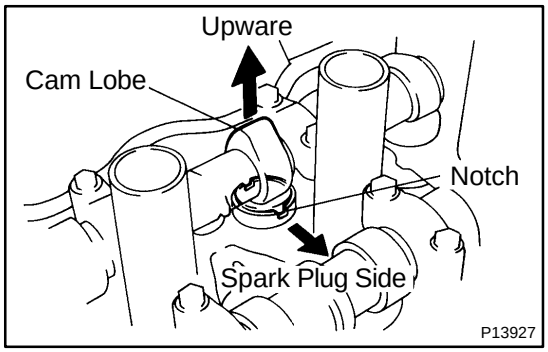

4. ADJUST VALVE CLEARANCE

(a) Remove the adjusting shim.

- Turn the crankshaft so that the cam lobe of the camshaft on the adjusting valve points upward.
- Position the notch of the valve lifter facing the spark plug side.

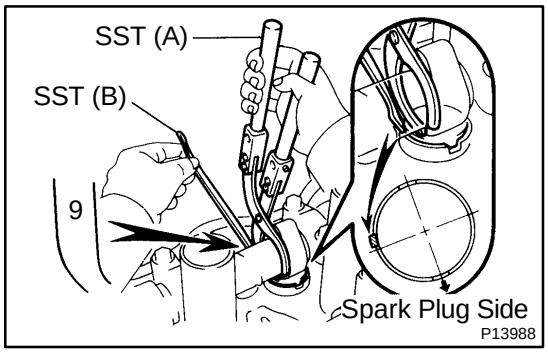

- Using SST (A), press down the valve lifter and place SST (B) between the camshaft and valve lifter. Remove SST (A).

SST 09248-55040 (09248-05410, 09248-05420)

HINT:

Apply SST (B) at slight angle on the side marked with ”9”, at the position shown in the illustration.

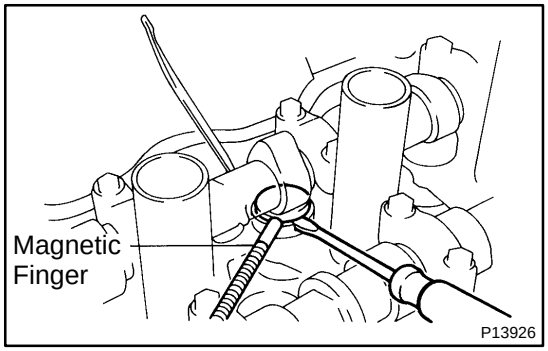

- Remove the adjusting shim with a small screwdriver and magnetic finger.

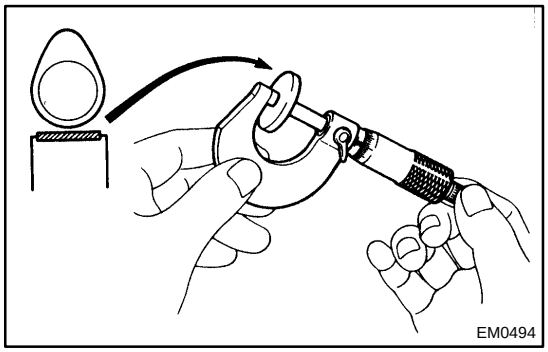

(b) Determine the replacement adjusting shim size by following the Formula or Charts:

- Using a micrometer, measure the thickness of the removed shim.
- Calculate the thickness of a new shim so that the valve clearance comes within specified value.

T ..... Thickness of removed shim
A ..... Measured valve clearance
N ..... Thickness of new shim
Intake:

N = T + (A - 0.24 mm (0.009 in.))
Exhaust:
N = T + (A - 0.33 mm (0.013 in.))

- Select a new shim with a thickness as close as possible to the calculated value.

HINT:
Shims are available in 17 sizes in increments of 0.05 mm (0.0020 in.), from 2.50 mm (0.0984 in.) to 3.30 mm (0.1299 in.).

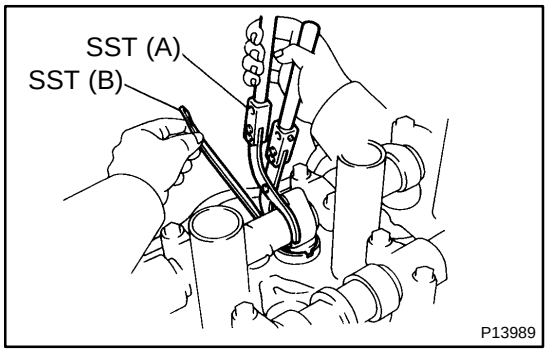

(c) Install a new adjusting shim.
- Place a new adjusting shim on the valve lifter.
- Using SST (A), press down the valve lifter and remove SST (B).

SST 09248-55040 (09248-05410, 09248-05420)

(d) Recheck the valve clearance.

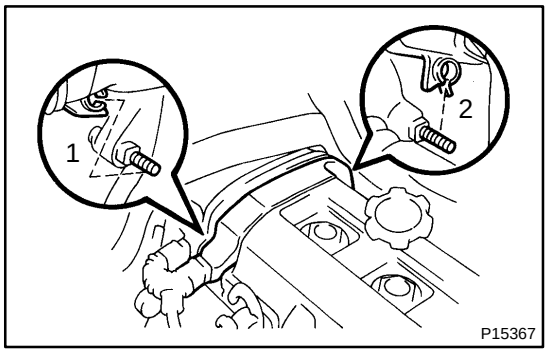

5. INSTALL CYLINDER HEAD COVER

(a) Install the cylinder head cover (See page EM-53).
(b) Install the oil filler cap.
(c) Install the engine wire protector to the 2 mounting bolts of the No.2 timing belt cover in the sequence shown.

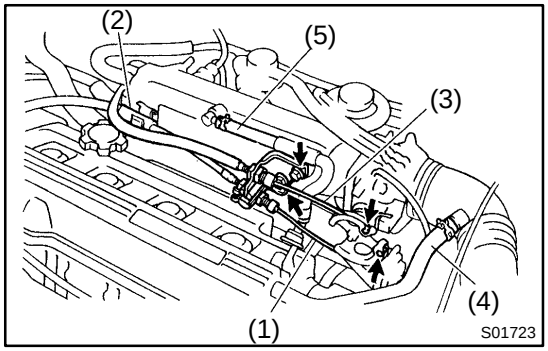

(d) Connect these cables and hoses:
(1) Accelerator cable to throttle body
(2) Accelerator cable to clamp on intake manifold
(3) A/T throttle control cable to throttle body
(4) PCV hose to air cleaner hose
(5) PCV hose to intake manifold

(e) Install the accelerator bracket with the 2 bolts.
(f) Install the 4 high-tension cords to the clamp on the cylinder head cover.
(g) Connect the 4 high-tension cords to the spark plugs.

Adjusting Shim Selection Chart (Intake)

| Measured clearance mm (in.) \ Installed shim thickness mm (in.) | 2.500 (0.0984) | 2.520 (0.0992) | 2.540 (0.1000) | 2.550 (0.1004) | 2.560 (0.1008) | 2.580 (0.1016) | 2.600 (0.1024) | 2.620 (0.1031) | 2.640 (0.1039) | 2.650 (0.1043) | 2.660 (0.1047) | 2.670 (0.1051) | 2.680 (0.1055) | 2.690 (0.1059) | 2.700 (0.1063) | 2.710 (0.1067) | 2.720 (0.1071) | 2.730 (0.1075) | 2.740 (0.1079) | 2.750 (0.1083) | 2.760 (0.1087) | 2.770 (0.1091) | 2.780 (0.1094) | 2.790 (0.1098) | 2.800 (0.1102) | 2.810 (0.1106) | 2.820 (0.1110) | 2.830 (0.1114) | 2.840 (0.1118) | 2.850 (0.1122) | 2.860 (0.1126) | 2.870 (0.1130) | 2.880 (0.1134) | 2.890 (0.1138) | 2.900 (0.1142) | 2.910 (0.1146) | 2.920 (0.1150) | 2.930 (0.1154) | 2.940 (0.1157) | 2.950 (0.1161) | 2.960 (0.1165) | 2.970 (0.1169) | 2.980 (0.1173) | 2.990 (0.1177) | 3.000 (0.1181) | 3.010 (0.1185) | 3.020 (0.1189) | 3.030 (0.1193) | 3.040 (0.1197) | 3.050 (0.1201) | 3.060 (0.1205) | 3.080 (0.1213) | 3.100 (0.1220) | 3.120 (0.1228) | 3.140 (0.1236) | 3.150 (0.1240) | 3.160 (0.1244) | 3.180 (0.1252) | 3.200 (0.1260) | 3.220 (0.1268) | 3.240 (0.1276) | 3.250 (0.1280) | 3.260 (0.1283) | 3.280 (0.1291) | 3.300 (0.1299) |
|---|---|---

Adjusting Shim Selection Chart (Exhaust)

| Measured clearance mm (in.) \ Installed shim thickness mm (in.) | 2.500 (0.0984) | 2.520 (0.0992) | 2.540 (0.1000) | 2.550 (0.1004) | 2.560 (0.1008) | 2.580 (0.1016) | 2.600 (0.1024) | 2.620 (0.1031) | 2.640 (0.1039) | 2.650 (0.1043) | 2.660 (0.1047) | 2.670 (0.1051) | 2.680 (0.1055) | 2.690 (0.1059) | 2.700 (0.1063) | 2.710 (0.1067) | 2.720 (0.1071) | 2.730 (0.1075) | 2.740 (0.1079) | 2.750 (0.1083) | 2.760 (0.1087) | 2.770 (0.1091) | 2.780 (0.1094) | 2.790 (0.1098) | 2.800 (0.1102) | 2.810 (0.1106) | 2.820 (0.1110) | 2.830 (0.1114) | 2.840 (0.1118) | 2.850 (0.1122) | 2.860 (0.1126) | 2.870 (0.1130) | 2.880 (0.1134) | 2.890 (0.1138) | 2.900 (0.1142) | 2.910 (0.1146) | 2.920 (0.1150) | 2.930 (0.1154) | 2.940 (0.1157) | 2.950 (0.1161) | 2.960 (0.1165) | 2.970 (0.1169) | 2.980 (0.1173) | 2.990 (0.1177) | 3.000 (0.1181) | 3.010 (0.1185) | 3.020 (0.1189) | 3.030 (0.1193) | 3.040 (0.1197) | 3.050 (0.1201) | 3.060 (0.1205) | 3.080 (0.1213) | 3.100 (0.1220) | 3.120 (0.1228) | 3.140 (0.1236) | 3.150 (0.1240) | 3.160 (0.1244) | 3.180 (0.1252) | 3.200 (0.1260) | 3.220 (0.1268) | 3.240 (0.1276) | 3.250 (0.1280) | 3.260 (0.1283) | 3.280 (0.1291) | 3.300 (0.1299) |
|---|---|---

SF0VQ-02

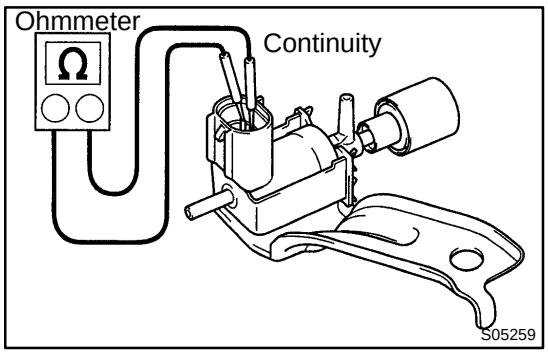

INSPECTION

1. REMOVE VSV

2. INSPECT VSV FOR OPEN CIRCUIT

Using an ohmmeter, check that there is continuity between the terminals.

Resistance: 33 - 39 Ω at 20˚C (68˚F)

If there is no continuity, replace the VSV.

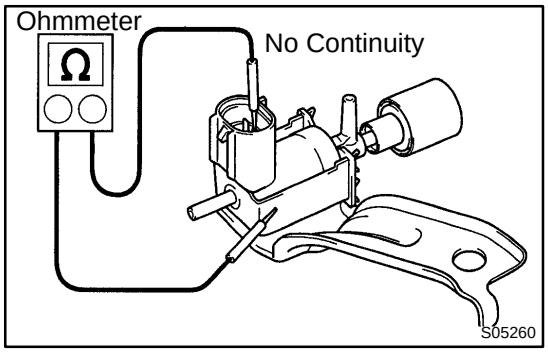

3. INSPECT VSV FOR GROUND

Using an ohmmeter, check that there is no continuity between each terminal and the body.

If there is continuity, replace the VSV.

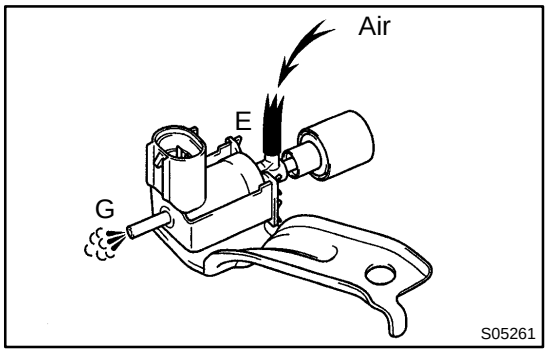

4. INSPECT VSV OPERETION

(a) Check that air flows from ports E to G.

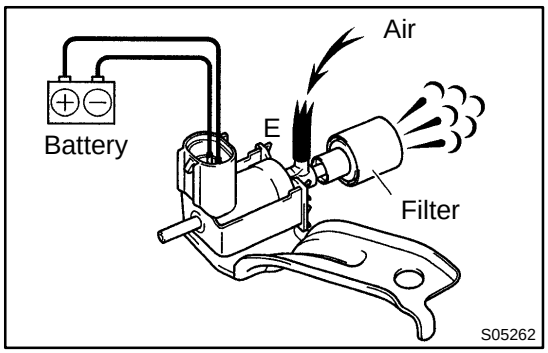

(b) Apply battery voltage across the terminals.

(c) Check that air flows from port E to the filter.

If operation is not as specified, replace the VSV.

5. REINSTALL VSV

CO0GB-02

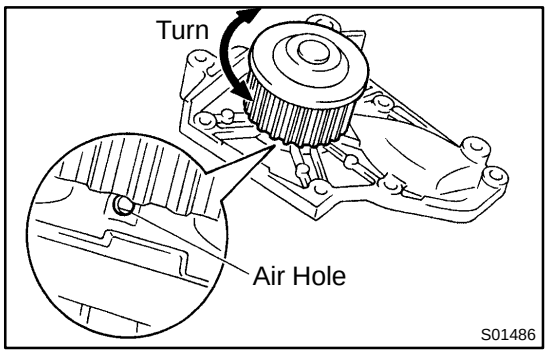

INSPECTION

1. INSPECT WATER PUMP

(a) Visually check the air hole for coolant leakage.

If leakage is found, replace the water pump.

If engine coolant has leaked onto the timing belt, replace the timing belt.

(b) Turn the pulley, and check that the water pump bearing moves smoothly and quietly.

If necessary, replace the water pump.

2. INSPECT TIMING BELT COMPONENTS

(See page EM-19)

COMPRESSION

EM07Y-10

INSPECTION

HINT:

If there is lack of power, excessive oil consumption or poor fuel economy, measure the compression pressure.

1. WARM UP AND STOP ENGINE

Allow the engine to warm up to normal operating temperature.

2. DISCONNECT DISTRIBUTOR CONNECTOR

3. DISCONNECT HIGH-TENSION CORDS FROM SPARK PLUGS

4. REMOVE SPARK PLUGS

5. INSPECT CYLINDER COMPRESSION PRESSURE

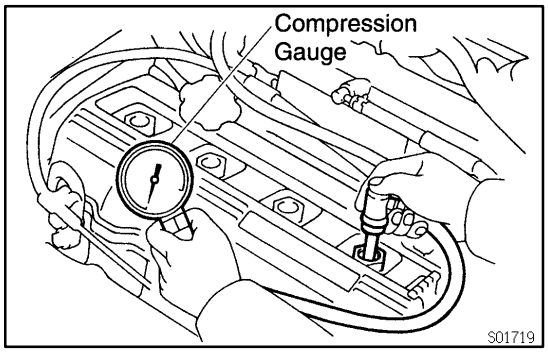

(a) Insert a compression gauge into the spark plug hole.

(b) Fully open the throttle.

(c) While cranking the engine, measure the compression pressure.

HINT:

Always use a fully charged battery to obtain engine speed of 250 rpm or more.

(d) Repeat steps (a) through (c) for each cylinder.

NOTICE:

This measurement must be done in as short a time as possible.

Compression pressure:
1,226 kPa (12.5 kgf/cm^2, 178 psi) or more
Minimum pressure: 981 kPa (10.0 kgf/cm^2, 142 psi)
Difference between each cylinder:
98 kPa (1.0 kgf/cm^2, 14 psi) or less

(e) If the cylinder compression in one or more cylinders is low, pour a small amount of engine oil into the cylinder through the spark plug hole and repeat steps (a) through (c) for cylinders with low compression.

- If adding oil helps the compression, it is likely that the piston rings and/or cylinder bore are worn or damaged.
- If pressure stays low, a valve may be sticking or seating is improper, or there may be leakage past the gasket.

6. REINSTALL SPARK PLUGS

7. RECONNECT HIGH- TENSION CORDS TO SPARK PLUGS

8. RECONNECT DISTRIBUTOR CONNECTOR

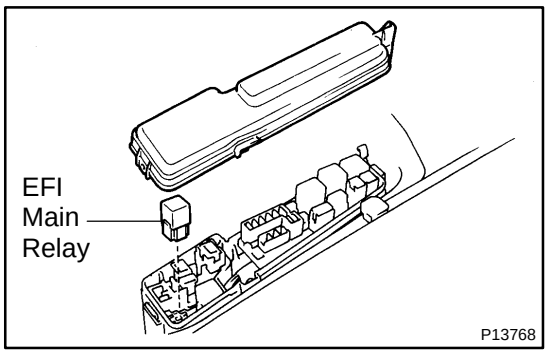

EFI MAIN RELAY

SF0VM-06

INSPECTION

1. REMOVE EFI MAIN RELAY

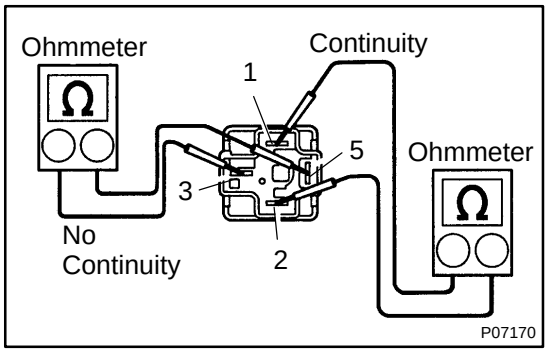

2. INSPECT RELAY CONTINUITY

(a) Using an ohmmeter, check that there is continuity between terminals 1 and 2.

If there is no continuity, replace the relay.

(b) Check that there is no continuity between terminals 3 and 5.

If there is continuity, replace the relay.

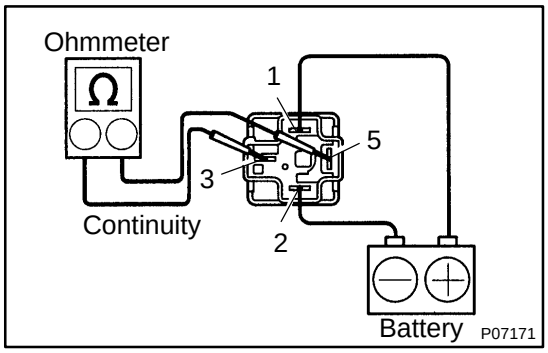

3. INSPECT RELAY OPERATION

(a) Apply battery voltage across terminals 1 and 2.

(b) Using an ohmmeter, check that there is continuity between terminals 3 and 5.

If there is no continuity, replace the relay.

4. REINSTALL EFI MAIN RELAY

SF0VO-04

INSPECTION

1. REMOVE CIRCUIT OPENING RELAY

2. INSPECT RELAY CONTINUITY

(a) Using and ohmmeter, check that there is continuity between terminals STA and E1.

If there is no continuity, replace the relay.

(b) Check that there is continuity between terminals +B and FC.

If there is no continuity, replace the relay.

(c) Check that there is no continuity between terminals +B and FP.

If there is continuity, replace the relay.

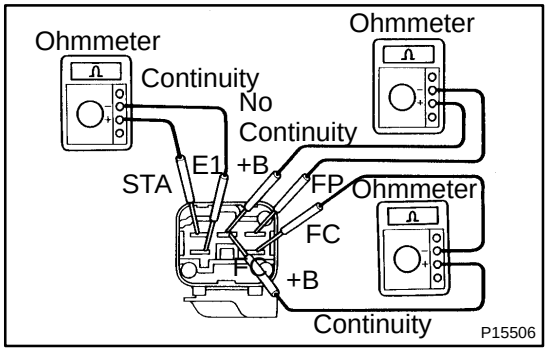

3. INSPECT RELAY OPERATION

(a) Apply battery voltage across terminals STA and E1.

(b) Using an ohmmeter, check that there is continuity between terminals +B and FP.

If there is no continuity, replace the relay.

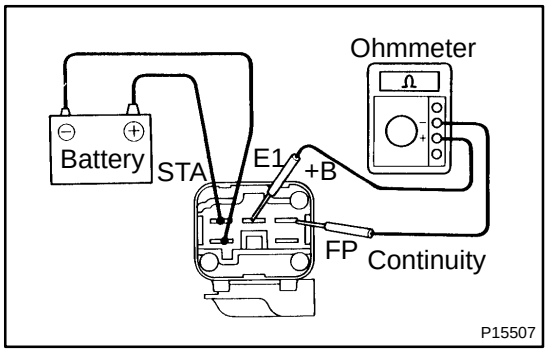

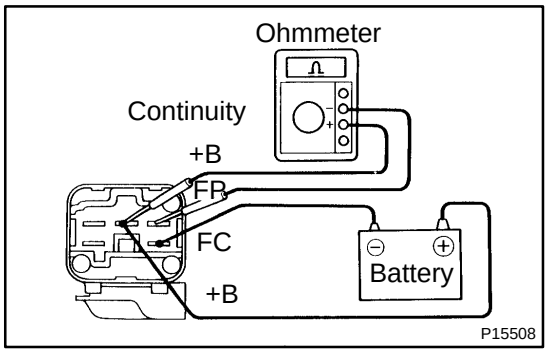

(c) Apply battery voltage across terminals +B and FC.

(d) Check that there is continuity between terminals +B and FP.

If there is no continuity, replace the relay.

4. REINSTALL CIRCUIT OPENING RELAY

CO/HC

EM1BS-02

INSPECTION

HINT:

This check is used only to determine whether or not the idle CO/HC complies with regulations.

1. INITIAL CONDITIONS

(a) Engine at normal operating temperature

(b) Air cleaner installed

(c) All pipes and hoses of air induction system connected

(d) All accessories switched OFF

(e) All vacuum lines properly connected

HINT:

All vacuum hoses for EGR systems, etc. should be properly connected.

(f) MFI system wiring connectors fully plugged

(g) Ignition timing set correctly

(h) Transmission in neutral position

(i) Tachometer and CO/HC meter calibrated by hand

2. START ENGINE

3. RACE ENGINE AT 2,500 RPM FOR APPROX. 180 SECONDS

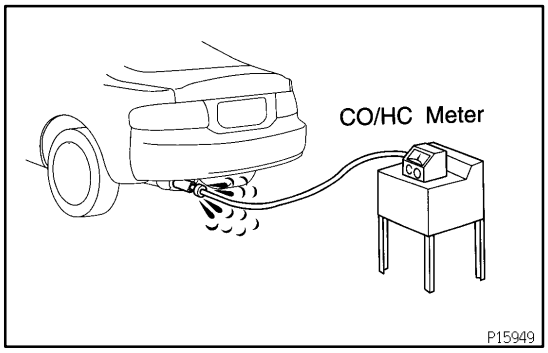

4. INSERT CO/HC METER TESTING PROBE AT LEAST 40 cm (1.3 ft) INTO TAILPIPE DURING IDLING

5. IMMEDIATELY CHECK CO/HC CONCENTRATION AT IDLE AND/OR 2,500 RPM

HINT:

When doing the 2 mode (2,500 rpm and idle) test, follow the measurement order prescribed by the applicable local regulations.

If the CO/HC concentration does not comply with regulations, troubleshoot in the order given below.

(a) Check oxygen sensor operation(See Oxygen Sensor Inspection under SFI System).

(b) See the table below for possible causes, and then inspect and correct the applicable causes if necessary.

CO	HC	Problems	Causes
Normal	High	Rough idle	3. Faulty ignitions: • Incorrect timing • Fouled, shorted or improperly gapped plugs • Open or crossed high-tension cords • Cracked distributor cap 4. Incorrect valve clearance 5. Leaky EGR valve 6. Leaky intake and exhaust valves 7. Leaky cylinder
Low	High	Rough idle (Fluctuating HC reading)	1. Vacuum leaks: • PCV hose • EGR valve • Intake manifold • Throttle body • IAC valve • Brake booster line 2. Lean mixture causing misfire
High	High	Rough idle (Black smoke from exhaust)	1. Restricted air filter 2. Faulty MFI systems: • Faulty pressure regulator • Clogged fuel return line • Defective ECT sensor • Defective IAT sensor • Defective MAP sensor • Faulty ECM • Faulty injectors • Faulty throttle position sensor

COMPRESSION

EM1BT-01

INSPECTION

HINT:

If there is lack of power, excessive oil consumption or poor fuel economy, measure the compression pressure.

1. WARM UP AND STOP ENGINE

Allow the engine to warm up to normal operating temperature.

2. DISCONNECT DISTRIBUTOR CONNECTORS

3. DISCONNECT HIGH-TENSION CORDS FROM SPARK PLUGS

4. REMOVE SPARK PLUGS

5. CHECK CYLINDER COMPRESSION PRESSURE

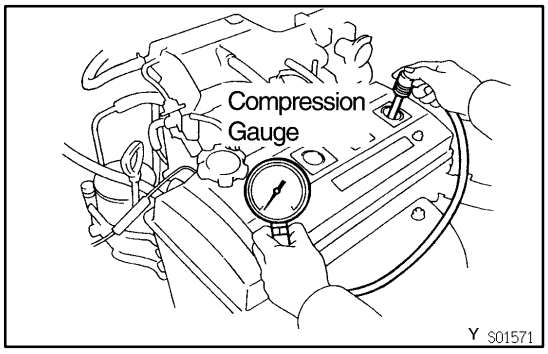

(a) Insert a compression gauge into the spark plug hole.

(b) Fully open the throttle.

(c) While cranking the engine, measure the compression pressure.

HINT:

Always use a fully charged battery to obtain engine revolutions of 250 rpm or more.

(d) Repeat steps (a) through (c) for each cylinder.

NOTICE:

This measurement must be done in as short a time as possible.

Compression pressure:
1,320 kPa (13.5 kgf/cm^2, 191 psi) or more
Minimum pressure:
981 kPa (10.0 kgf/cm^2, 142 psi)
Difference between each cylinder:
98 kPa (1.0 kgf/cm^2, 14 psi) or less

(e) If the cylinder compression in one or more cylinders is low, pour a small amount of engine oil into the cylinder through the spark plug hole and repeat steps (a) through (c) for cylinders with low compression.

- If adding oil helps the compression, chances are that the piston rings and/or cylinder bore are worn or damaged.
- If pressure stays low, a valve may be sticking or seating is improper, or there may be leakage past the gasket.

6. REINSTALL SPARK PLUGS

Torque: 18 N·m (180 kgf·cm, 13 ft·lbf)

7. RECONNECT HIGH-TENSION CORDS TO SPARK PLUGS

8. RECONNECT DISTRIBUTOR CONNECTORS

COOLANT

CO0Z3-01

INSPECTION

1. CHECK ENGINE COOLANT LEVEL AT RESERVOIR

The engine coolant level should be between the ”LOW” and ”FULL” lines.

If low, check for leaks and add engine coolant up to the ”FULL” line, ”when the engine is cold”.

2. CHECK ENGINE COOLANT QUALITY

(a) Remove the radiator cap.

CAUTION:

To avoid the danger of being burned, do not remove the radiator cap while the engine and radiator are still hot, as fluid and steam can be blown out under pressure.

(b) There should not be any excessive deposits of rust or scale around the radiator cap or water outlet filler hole, and the coolant should be free from oil.

If excessively dirty, clean the coolant passages and replace the coolant.

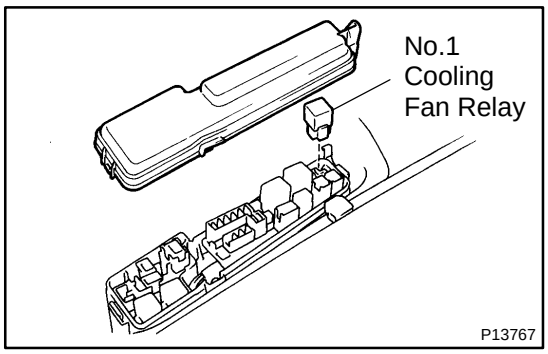

COOLING FAN RELAY

CO193-01

INSPECTION

1. REMOVE RELAY BOX COVER

2. REMOVE NO.1 COOLING FAN RELAY (Marking: FAN NO.1)

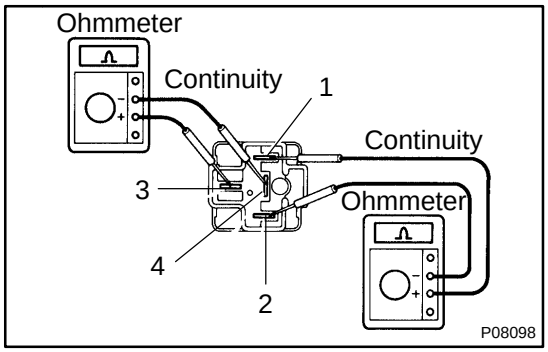

3. INSPECT RELAY CONTINUITY

(a) Using an ohmmeter, check that there is continuity between terminals 1 and 2.

If there is no continuity, replace the relay.

(b) Check that there is continuity between terminals 3 and 4.

If there is no continuity, replace the relay.

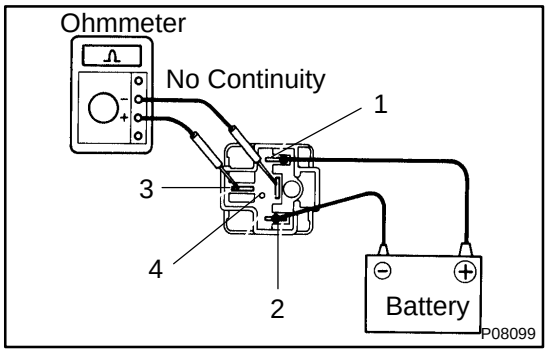

4. INSPECT RELAY OPERATION

(a) Apply battery voltage across terminals 1 and 2.

(b) Using an ohmmeter, check that there is no continuity between terminals 3 and 4.

If there is continuity, replace the relay.

5. REINSTALL NO.1 COOLING FAN RELAY

6. REINSTALL RELAY BOX COVER

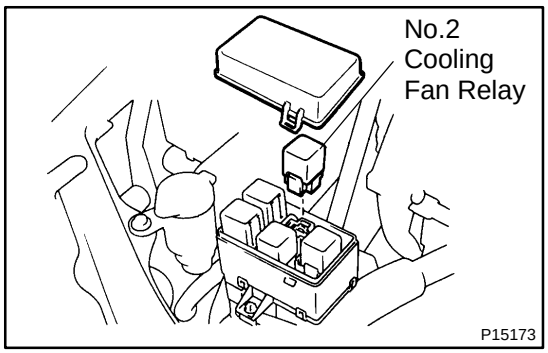

7. REMOVE RELAY BOX COVER

8. REMOVE NO.2 COOLING FAN RELAY (Marking: FAN NO.2)

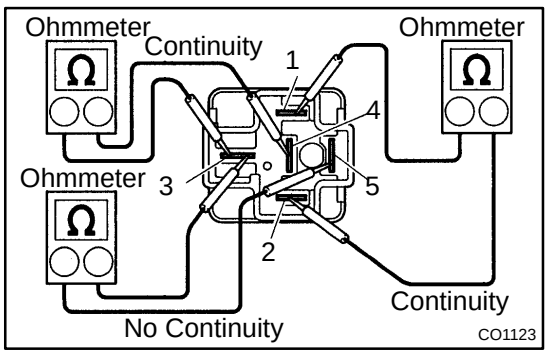

9. INSPECT RELAY CONTINUITY

(a) Using an ohmmeter, check that there is continuity between terminals 1 and 2.

If there is no continuity, replace the relay.

(b) Check that there is continuity between terminals 3 and 4.

If there is no continuity, replace the relay.

(c) Check that there is no continuity between terminals 3 and 5.

If there is continuity, replace the relay.

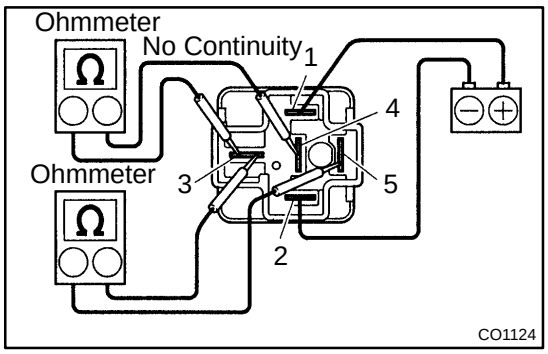

10. INSPECT RELAY OPERATION

(a) Apply battery voltage across terminals 1 and 2.

(b) Using an ohmmeter, check that there is no continuity between terminals 3 and 4.

If there is continuity, replace the relay.

(c) Using an ohmmeter, check that there is continuity between terminals 3 and 5.

If there is no continuity, replace the relay.

11. REINSTALL NO.2 COOLING FAN RELAY

12. REINSTALL RELAY BOX COVER

13. REMOVE RELAY BOX COVER

14. REMOVE NO.3 COOLING FAN RELAY (Marking: FAN NO.3)

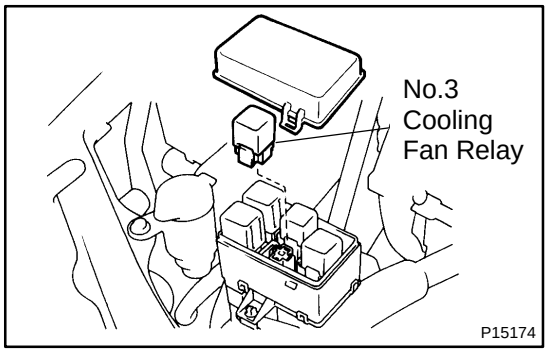

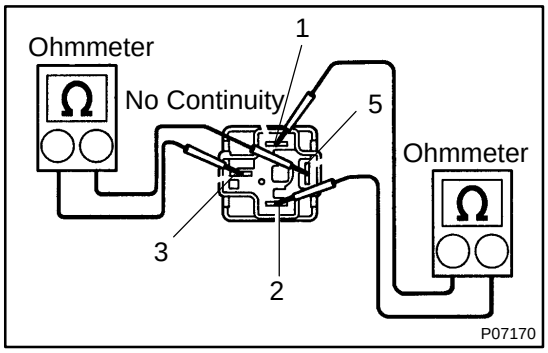

15. INSPECT RELAY CONTINUITY

(a) Using an ohmmeter, check that there is continuity between terminals 1 and 2.

If there is no continuity, replace the relay.

(b) Check that there is no continuity between terminals 3 and 5.

If there is continuity, replace the relay.

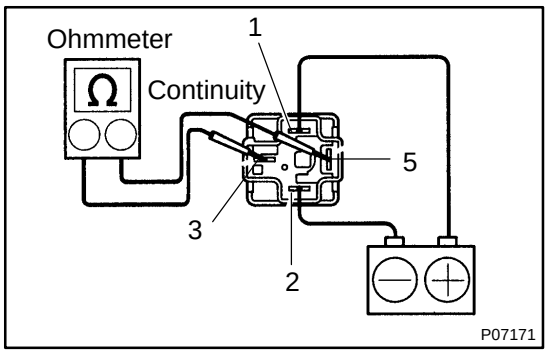

16. INSPECT RELAY OPERATION

(a) Apply battery voltage across terminals 1 and 2.

(b) Using an ohmmeter, check that there is continuity between terminals 3 and 5.

If there is no continuity, replace the relay.

17. REINSTALL NO.3 COOLING FAN RELAY

18. REINSTALL RELAY BOX COVER

EM1CD-02

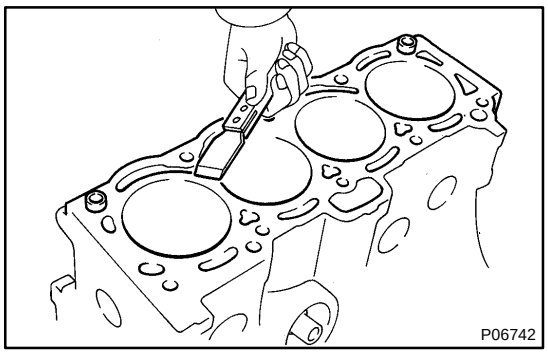

INSPECTION

1. CLEAN CYLINDER BLOCK

(a) Remove gasket material

Using a gasket scraper, remove all the gasket material from the top surface of the cylinder block.

(b) Clean cylinder block

Using a soft brush and solvent, thoroughly clean the cylinder block.

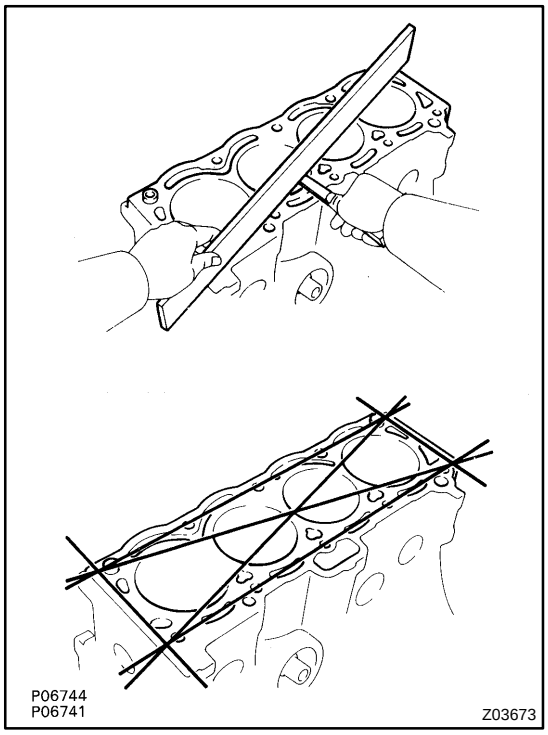

2. INSPECT TOP SURFACE OF CYLINDER BLOCK FOR FLATNESS

Using a precision straight edge and thickness gauge, measure the surfaces contacting the cylinder head gasket for warpage.

Maximum warpage:
0.05 mm (0.0020 in.)

If warpage is greater than maximum, replace the cylinder block.

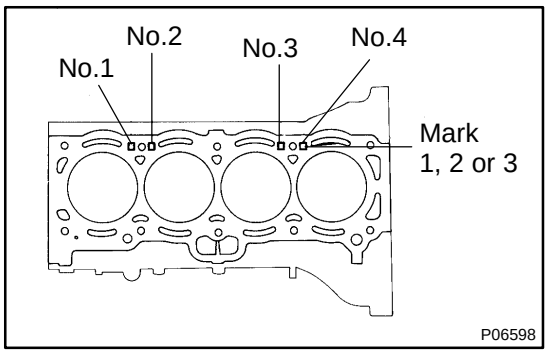

3. INSPECT CYLINDER FOR VERTICAL SCRATCHES

Visually check the cylinder for vertical scratches.

If deep scratches are present, rebore all the 4 cylinders. If necessary, replace the cylinder block.

4. INSPECT CYLINDER BORE DIAMETER

HINT:

There are 3 sizes of the standard cylinder bore diameter, marked ”1”, ”2” and ”3” accordingly. The mark is stamped on the top of the cylinder block.

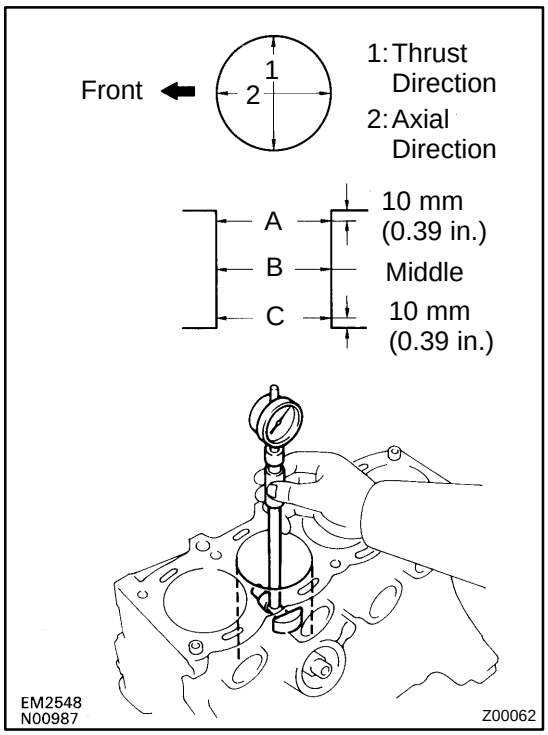

Using a cylinder gauge, measure the cylinder bore diameter at positions A, B and C in the thrust and axial directions.

Standard diameter:

STD

Mark "1"

81.000 - 81.010 mm (3.1890 - 3.1894 in.)

Mark "2"

81.010 - 81.020 mm (3.1894 - 3.1898 in.)

Mark "3"

81.020 - 81.030 mm (3.1898 - 3.1902 in.)

Maximum diameter:

STD

81.23 mm (3.1982 in.)

O/S 0.50

81.73 mm (3.2177 in.)

If the diameter is greater than maximum, rebore all the 4 cylinders. If necessary, replace the cylinder block.

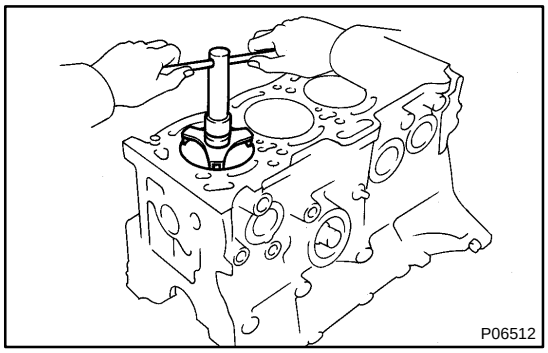

5. REMOVE CYLINDER RIDGE

If the wear is less than 0.2 mm (0.008 in.), using a ridge reamer, grind the top of the cylinder.

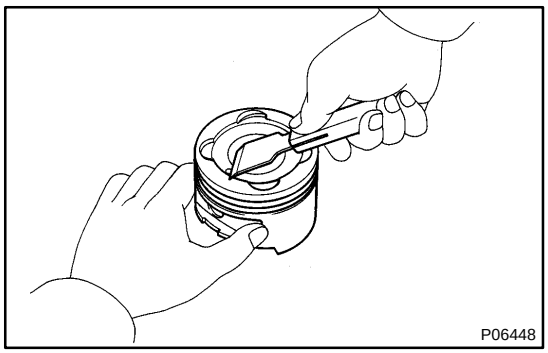

6. CLEAN PISTON

(a) Using a gasket scraper, remove the carbon from the piston top.

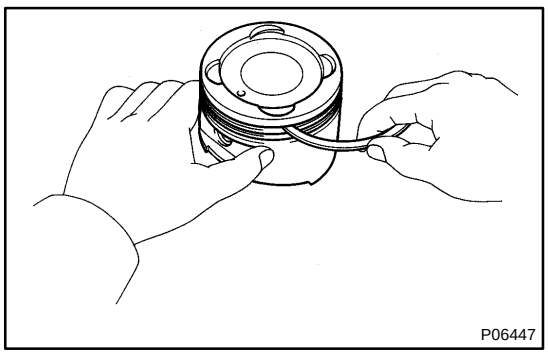

(b) Using a groove cleaning tool or broken ring, clean the piston ring grooves.

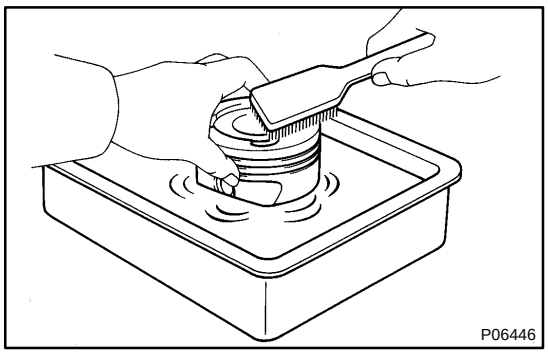

(c) Using solvent and a brush, thoroughly clean the piston.

NOTICE:

Do not use a wire brush.

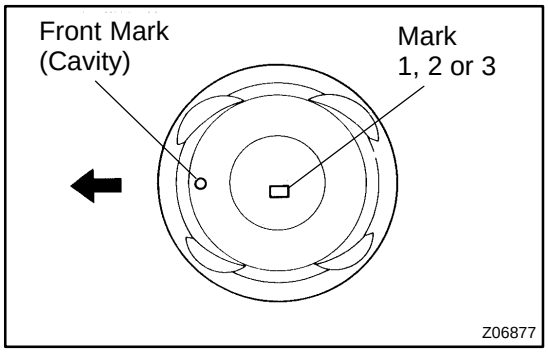

7. INSPECT PISTON OIL CLEARANCE

HINT:

There are 3 sizes of the standard piston diameter, marked ”1”, ”2” and ”3” accordingly. The mark is stamped on the piston top.

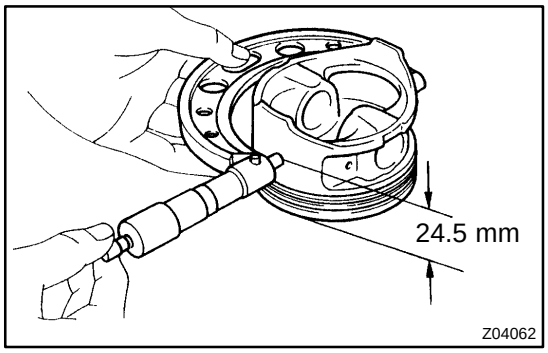

(a) Using a micrometer, measure the piston diameter at right angles to the piston pin center line, 24.5 mm (0.965 in.) from the piston head.

Piston diameter:

STD

Mark ”1”

80.905 - 80.915 mm (3.1852 - 3.1856 in.)

Mark ”2”

80.915 - 80.925 mm (3.1856 - 3.1860 in.)

Mark ”3”

80.925 - 80.935 mm (3.1860 - 3.1864 in.)

O/S 0.50

81.405 - 81.435 mm (3.2049 - 3.2061 in.)

(b) Measure the cylinder bore diameter in the thrust directions. (See page EM-77)

(c) Subtract the piston diameter measurement from the cylinder bore diameter measurement.

Standard oil clearance:

0.085 - 0.105 mm (0.0033 - 0.0041 in.)

Maximum oil clearance:

0.20 mm (0.0079 in.)

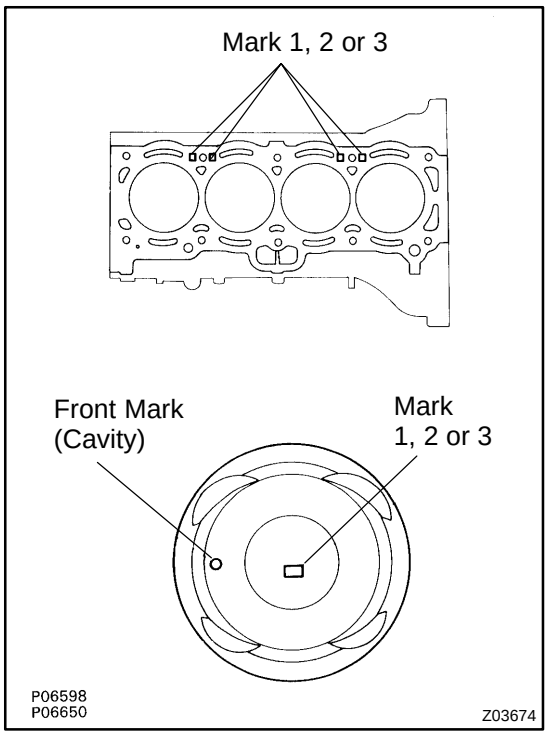

If the oil clearance is greater than maximum, replace all the 4 pistons and rebore all the 4 cylinders. If necessary, replace the cylinder block.

HINT:

Use new cylinder block:

Use a piston with the same number mark as the cylinder bore diameter marked on the cylinder block.

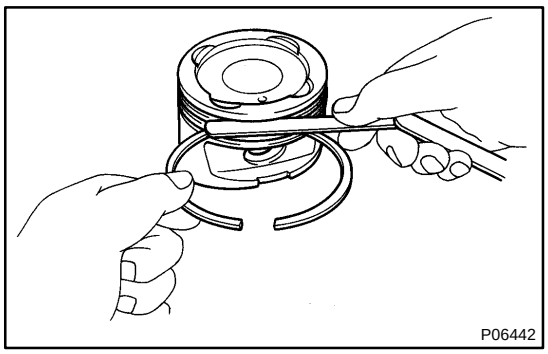

8. INSPECT PISTON RING GROOVE CLEARANCE

Using a thickness gauge, measure the clearance between new piston ring and the wall of the ring groove.

Ring groove clearance:

No.1: 0.008 - 0.080 mm (0.0003 - 0.0031 in.)

No.2: 0.030 - 0.070 mm (0.0012 - 0.0028 in.)

If the clearance is greater than maximum, replace the piston.

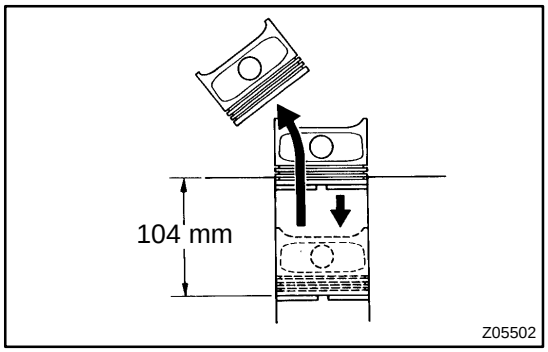

9. INSPECT PISTON RING END GAP

(a) Insert the piston ring into the cylinder bore.

(b) Using a piston, push the piston ring a little beyond the bottom of the ring travel, 104 mm (4.09 in.) from the top of the cylinder block.

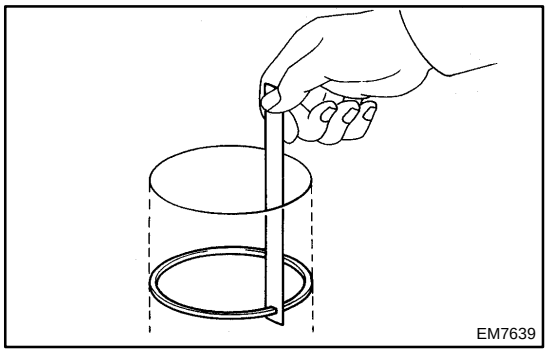

(c) Using a thickness gauge, measure the end gap.

Standard end gap:

No.1

0.250 - 0.350 mm (0.0098 - 0.0138 in.)

No.2

0.350 - 0.500 mm (0.0138 - 0.0197 in.)

Oil (Side rail)

0.100 - 0.400 mm (0.0039 - 0.0157 in.)

Maximum end gap:

No.1

1.05 mm (0.0413 in.)

No.2

1.20 mm (0.0472 in.)

Oil (Side rail)

1.10 mm (0.0433 in.)

If the end gap is greater than maximum, replace the piston ring.

If the end gap is greater than maximum, even with a new piston ring, rebore all the 4 cylinders or replace the cylinder block.

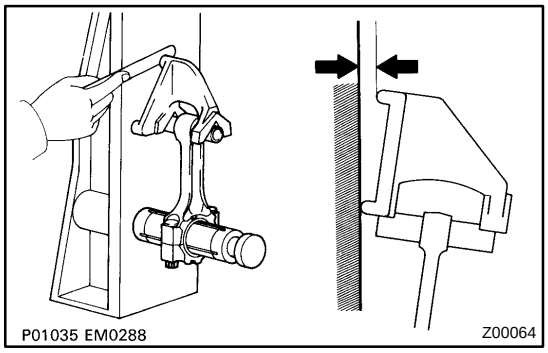

10. INSPECT CONNECTING ROD

Using a rod aligner and thickness gauge, check the connecting rod alignment.

- Check for out-of-alignment

Maximum out-of-alignment:

0.05 mm (0.0020 in.) per 100 mm (3.94 in.)

If out-of-alignment is greater than maximum, replace the connecting rod assembly.

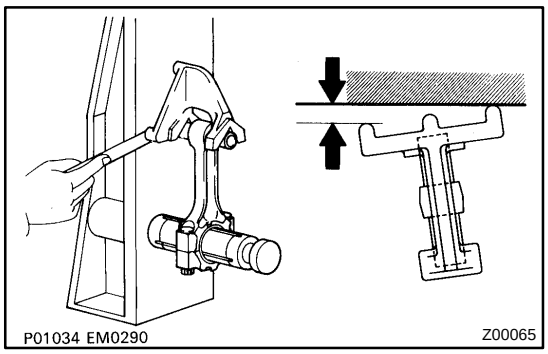

- Check for twist

Maximum twist:

0.05 mm (0.0020 in.) per 100 mm (3.94 in.)

If twist is greater than maximum, replace the connecting rod assembly.

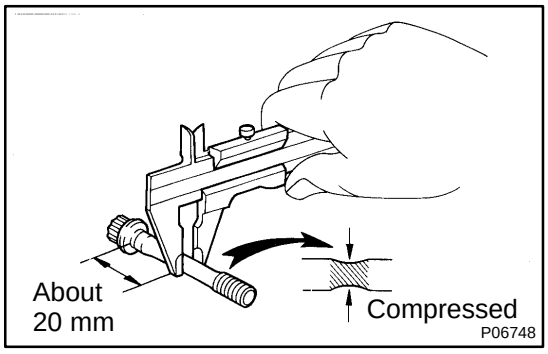

11. INSPECT CONNECTING ROD BOLTS

Using vernier calipers, measure the minimum diameter of the compressed bolt at the measuring point.

Standard diameter:

8.860 - 9.000 mm (0.3488 - 0.3543 in.)

Minimum diameter:

8.60 mm (0.3386 in.)

If the diameter is less than minimum, replace the connecting rod bolt.

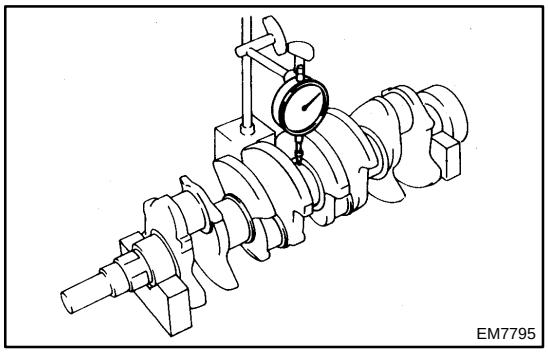

12. INSPECT CRANKSHAFT FOR RUNOUT

(a) Place the crankshaft on V-blocks.

(b) Using a dial indicator, measure the circle runout at the center journal.

Maximum circle runout:

0.03 mm (0.0012 in.)

If the circle runout is greater than maximum, replace the crankshaft.

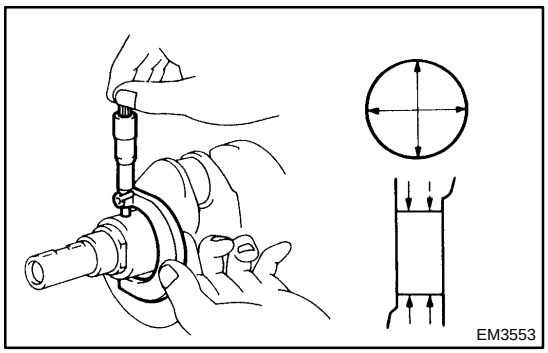

13. INSPECT MAIN JOURNALS AND CRANK PINS

(a) Using a micrometer, measure the diameter of each main journal and crank pin.

Diameter:

Item	Main journal	Crank pin
STD	47.982 - 48.000 mm (1.8891 - 1.8898 in.)	47.988 - 48.000 mm (1.8893 - 1.8898 in.)
U/S 0.25	47.745 - 47.555 mm (1.8797 - 1.8801 in.)	47.745 - 47.555 mm (1.8797 - 1.8801 in.)

If the diameter is not as specified, check the oil clearance (See steps 4 and 5 in cylinder block disassembly), If necessary, grind or replace the crankshaft.

(b) Check each main journal and crank pin for taper and out-of-round as shown.

Maximum taper and out-of-round:

0.005 mm (0.0002 in.)

If the taper and out-of-round is greater than maximum, replace the crankshaft.

14. IF NECESSARY, GRIND AND HONE MAIN JOURNALS AND/OR CRANK PINS

- Grind and hone the main journals and/or crank pins to the finished undersized diameter (See procedure in step 2).
- Install new main journal and/or crankshaft pin undersized bearings.

EM1C4-02

INSPECTION

1. CLEAN TOP SURFACES OF PISTONS AND CYLINDER BLOCK

(a) Turn the crankshaft, and bring each piston to the top dead center (TDC). Using a gasket scraper, remove all the carbon from the piston top surface.

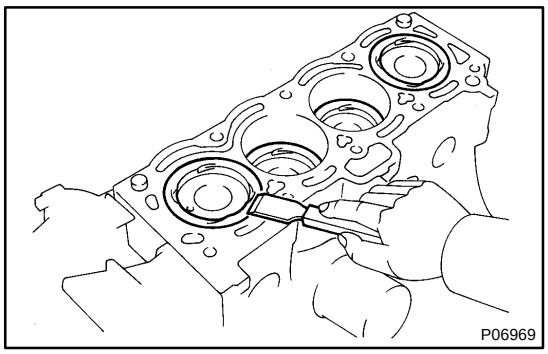

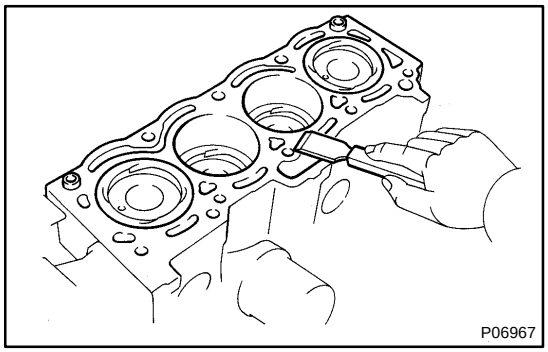

(b) Using a gasket scraper, remove all the gasket material from the cylinder block surface.

(c) Using compressed air, blow carbon and oil from the bolt holes.

CAUTION:
Protect your eyes when using high-pressure compressed air.

2. CLEAN CYLINDER HEAD

(a) Remove gasket material.
Using a gasket scraper, remove all the gasket material from the cylinder block contact surface.

NOTICE:
Be careful not to scratch the cylinder block contact surface.

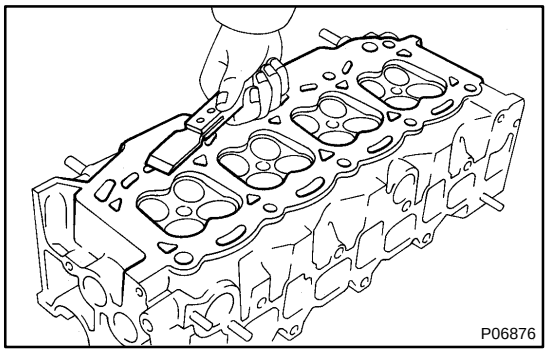

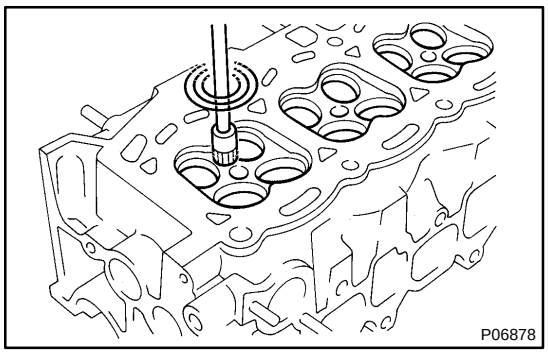

(b) Clean combustion chambers.
Using a wire brush, remove all the carbon from the combustion chambers.

NOTICE:
Be careful not to scratch the cylinder block contact surface.

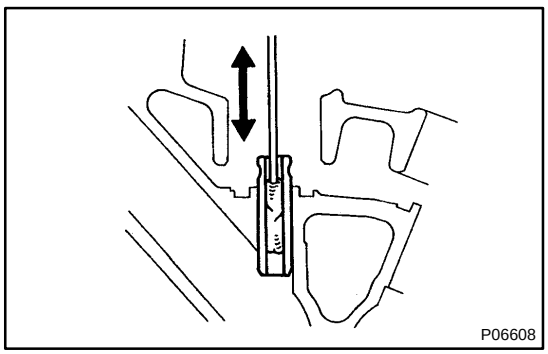

(c) Clean valve guide bushings.
Using a valve guide bushing brush and solvent, clean all the guide bushings.

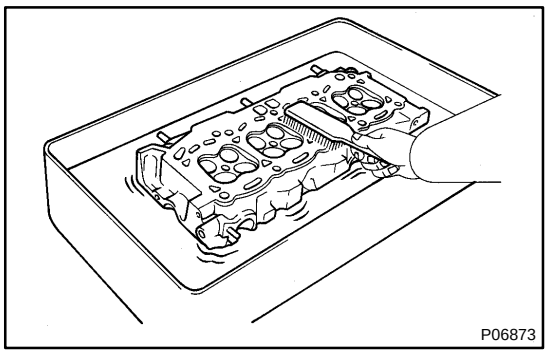

(d) Clean cylinder head.
Using a soft brush and solvent, thoroughly clean the cylinder head.

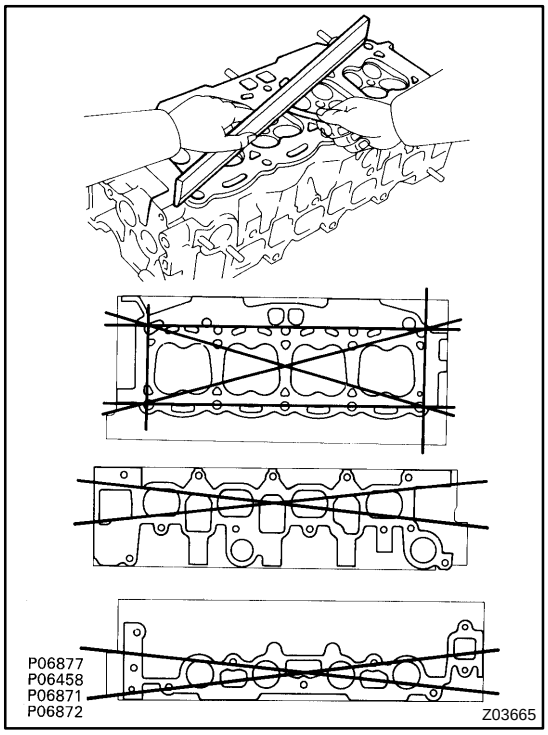

3. INSPECT CYLINDER HEAD

(a) Inspect for flatness.
Using a precision straight edge and thickness gauge, measure the surfaces contacting the cylinder block and the manifolds for warpage.
Maximum warpage:
Cylinder block side
0.05 mm (0.0020 in.)
Manifold side
0.10 mm (0.0039 in.)

If warpage is greater than maximum, replace the cylinder head.

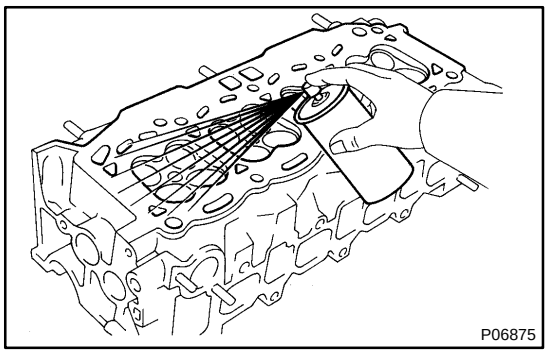

(b) Inspect for cracks.
Using a dye penetrant, check the combustion chambers, intake ports, exhaust ports and surface contacting the cylinder block.

If cracked, replace the cylinder head.

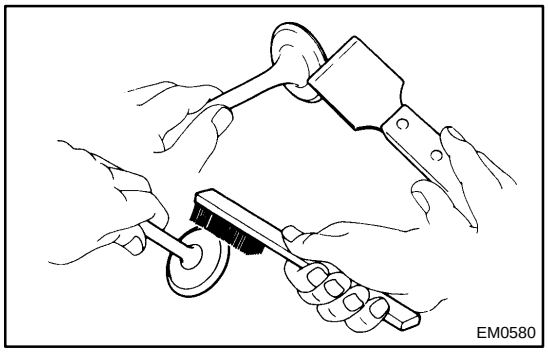

4. CLEAN VALVE, GUIDE BUSHINGS AND VALVE SEATS

(a) Using a gasket scraper, chip off any carbon from the valve head.

(b) Using a wire brush, thoroughly clean the valve.

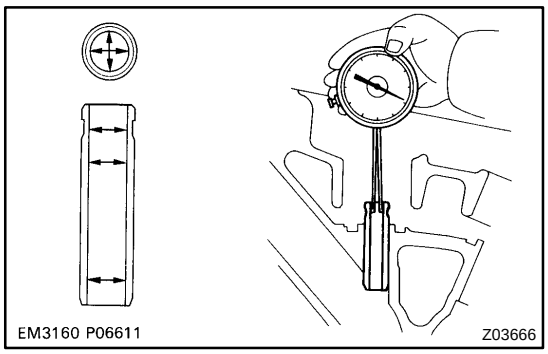

5. INSPECT VALVE STEMS AND GUIDE BUSHINGS

(a) Using a caliper gauge, measure the inside diameter of the guide bushing.

Bushing inside diameter:
6.010 - 6.030 mm (0.2366 - 0.2374 in.)

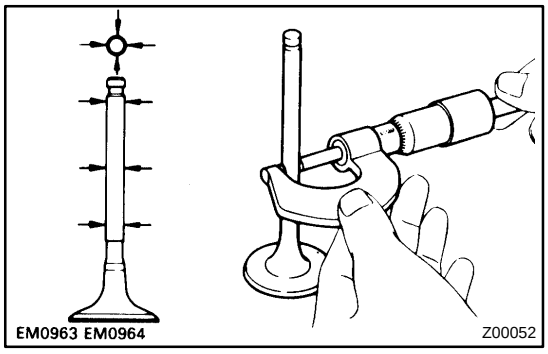

(b) Using a micrometer, measure the diameter of the valve stem.

Valve stem diameter:
Intake
5.970 - 5.985 mm (0.2350 - 0.2356 in.)
Exhaust
5.965 - 5.980 mm (0.2348 - 0.2354 in.)

(c) Subtract the valve stem diameter measurement from the guide bushing inside diameter measurement.

Standard oil clearance:
Intake
0.025 - 0.060 mm (0.0010 - 0.0024 in.)
Exhaust
0.030 - 0.065 mm (0.0012 - 0.0026 in.)
Maximum oil clearance:
Intake
0.08 mm (0.0031 in.)
Exhaust
0.10 mm (0.0039 in.)

If the clearance is greater than maximum, replace the valve and guide bushing.

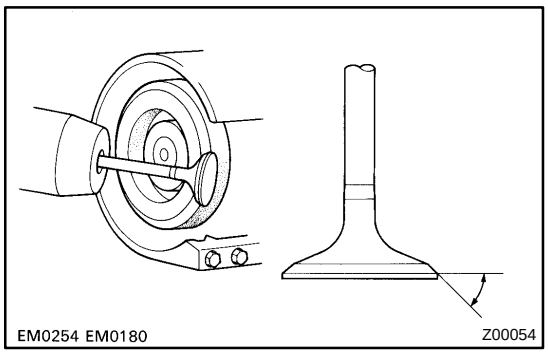

6. INSPECT AND GRIND VALVES

(a) Grind the valve enough to remove pits and carbon.

(b) Check that the valve is ground to the correct valve face angle.

Valve face angle:
44.5°

(c) Check the valve head margin thickness.

Standard margin thickness:
0.8 - 1.2 mm (0.031 - 0.047 in.)
Minimum margin thickness:
0.5 mm (0.020 in.)

If the margin thickness is less than minimum, replace the valve.

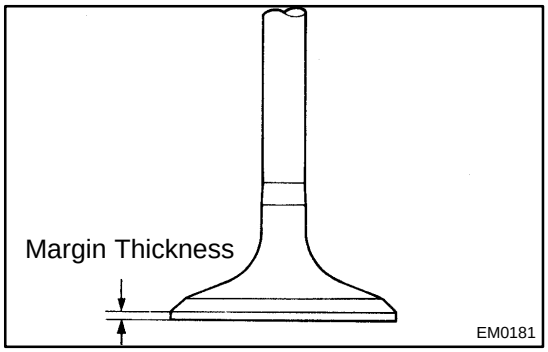

(d) Check the valve overall length.

Standard overall length:
Intake
87.45 mm (3.4429 in.)
Exhaust
87.84 mm (3.4583 in.)
Minimum overall length:
Intake
86.95 mm (3.4232 in.)
Exhaust
87.34 mm (3.4386 in.)

If the overall length is less than minimum, replace the valve.

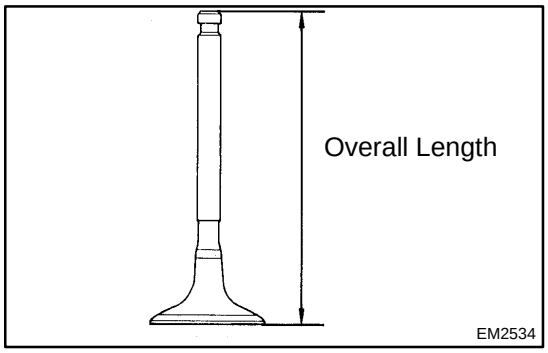

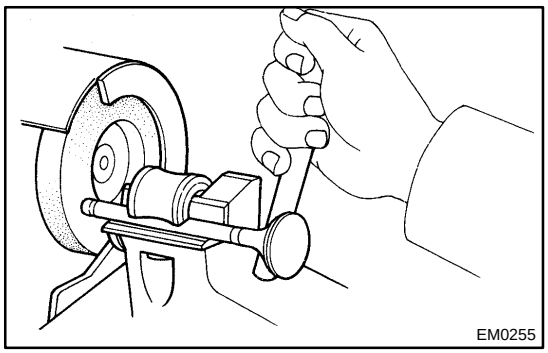

(e) Check the surface of the valve stem tip for wear.

If the valve stem tip is worn, resurface the tip with a grinder or replace the valve.

NOTICE:
Do not grind to belon the minimum overall length.

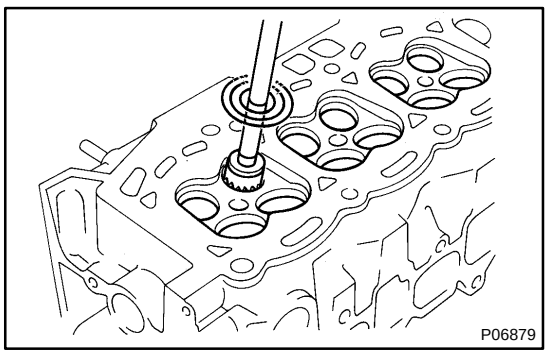

7. INSPECT AND CLEAN VALVE SEATS

(a) Using a 45° carbide cutter, resurface the valve seats. Remove only enough metal to clean the seats.

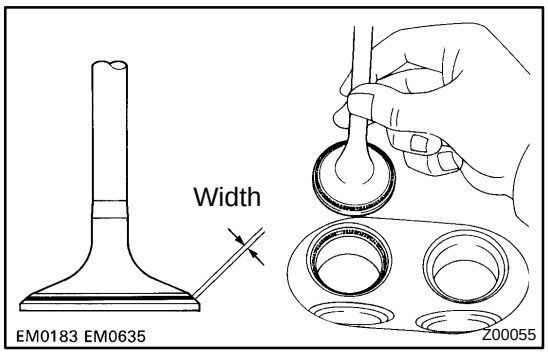

(b) Check the valve seating position.
Apply a light coat of prussian blue (or white lead) to the valve face. Lightly press the valve against the seat. Do not rotate valve.

(c) Check the valve face and seat for the following:
- If blue appears 360˚ around the valve face, the valve is concentric. If not, replace the valve.
- If blue appears 360˚ around the valve seat, the guide and face are concentric. If not, resurface the seat.
- Check that the seat contact is in the middle of the valve face with these width:

1.0 - 1.4 mm (0.039 - 0.055 in.)

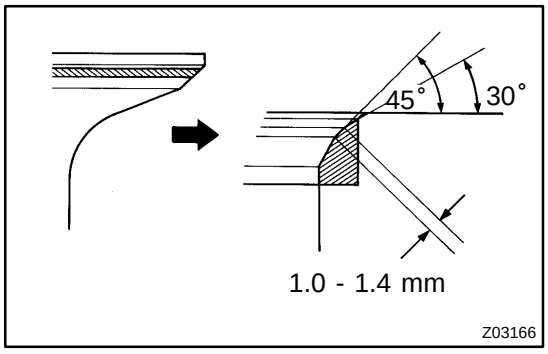

If not, correct the valve seats as follows:

(1) If the seating is too high on the valve face, use 30˚ and 45˚ cutters to correct the seat.

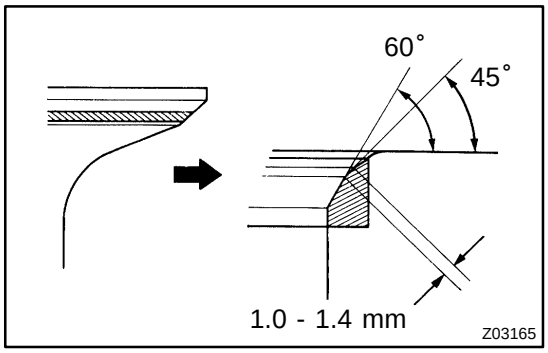

(2) If the seating is too low on the valve face, use 60˚ and 45˚ cutters to correct the seat.

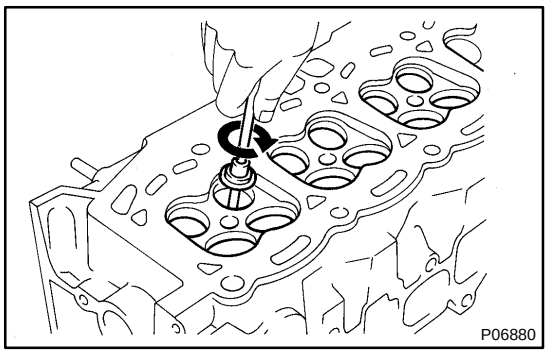

(d) Hand-lap the valve and valve seat with an abrasive compound.

(e) After hand-lapping, clean the valve and valve seat.

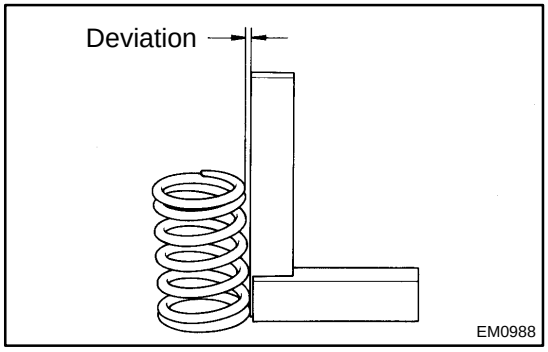

8. INSPECT VALVE SPRINGS

(a) Using a steel square, measure the deviation of the valve spring.

Maximum deviation:

2.0 mm (0.079 in.)

If the deviation is greater than maximum, replace the valve spring.

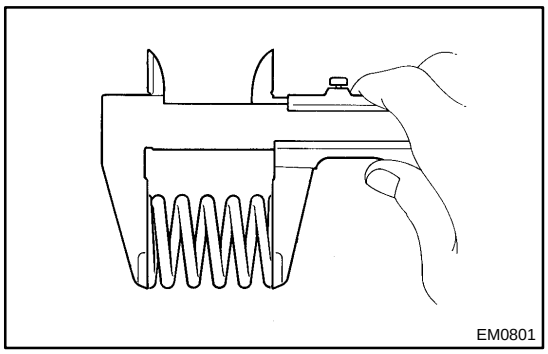
EM0801

(b) Using a vernier caliper, measure the free length of the valve spring.
Free length:
38.57 mm (1.5185 in.)

If the free length is not as specified, replace the valve spring.

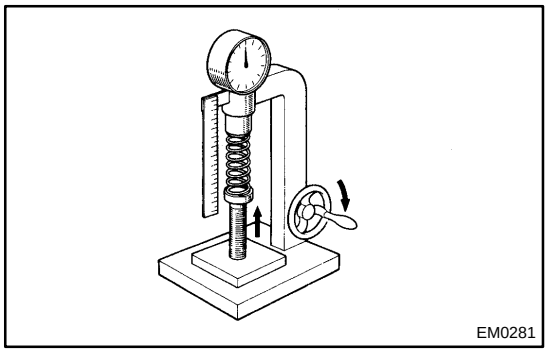
EM0281

(c) Using a spring tester, measure the tension of the valve spring at the specified installed length.
Installed tension:
166 N (16.9 kgf, 37.3 lbf) at 31.7 mm (1.248 in.)

If the installed tension is not as specified, replace the valve spring.

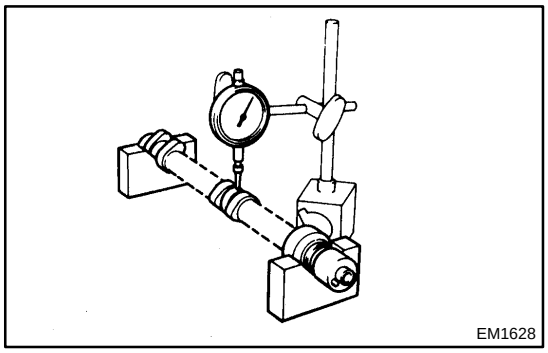
EM1628

9. INSPECT CAMSHAFT FOR RUNOUT

(a) Place the camshaft on V-blocks.

(b) Using a dial indicator, measure the circle runout at the center journal.
Maximum circle runout:
0.04 mm (0.0016 in.)

If the circle runout is greater than maximum, replace the camshaft.

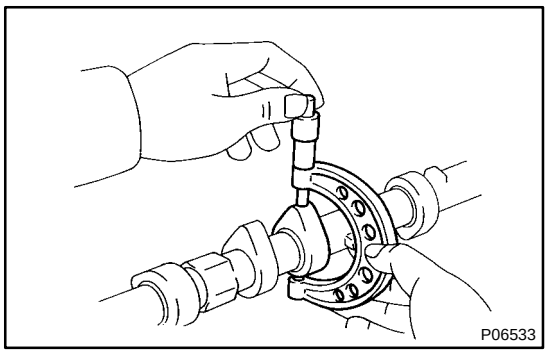
P06533

10. INSPECT CAM LOBES

Using a micrometer, measure the cam lobe height.

Standard cam lobe height:
Intake
42.610 - 42.710 mm (1.6776 - 1.6815 in.)
Exhaust
41.960 - 42.060 mm (1.6520 - 1.6560 in.)
Minimum cam lobe height:
Intake
42.20 mm (1.6614 in.)
Exhaust
41.55 mm (1.6358 in.)

If the cam lobe height is less than minimum, replace the camshaft.

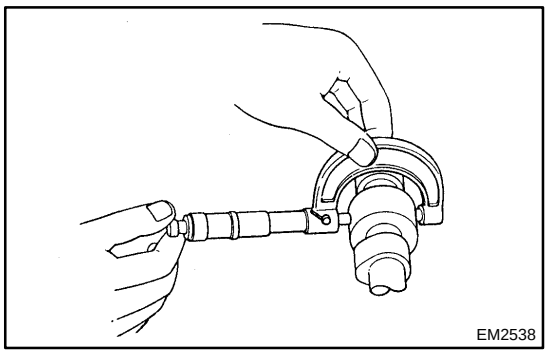

11. INSPECT CAMSHAFT JOURNALS

Using a micrometer, measure the journal diameter.

Journal diameter:

Exhaust No.1

24.949 - 24.965 mm (0.9822 - 0.9829 in.)

Others

22.949 - 22.965 mm (0.9035 - 0.9041 in.)

If the journal diameter is not as specified, check the oil clearance.

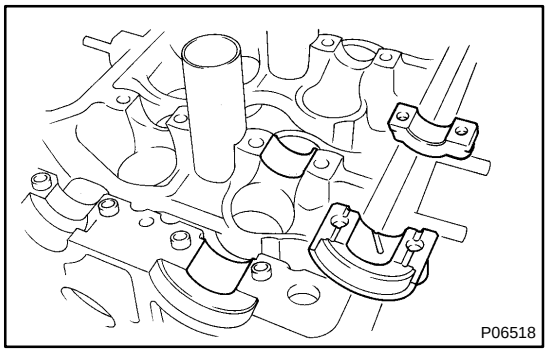

12. INSPECT CAMSHAFT BEARINGS

Check the bearings for flaking and scoring.

If the bearings are damaged, replace the bearing caps and cylinder head as a set.

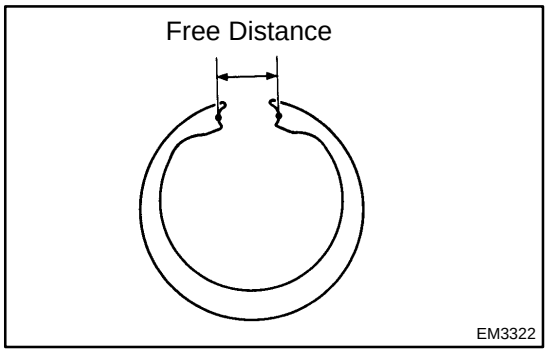

13. INSPECT CAMSHAFT GEAR SPRING

Using a vernier caliper, measure the free distance between the spring ends.

Free distance:

17.0 - 17.6 mm (0.669 - 0.693 in.)

If the free distance is not as specified, replace the gear spring.

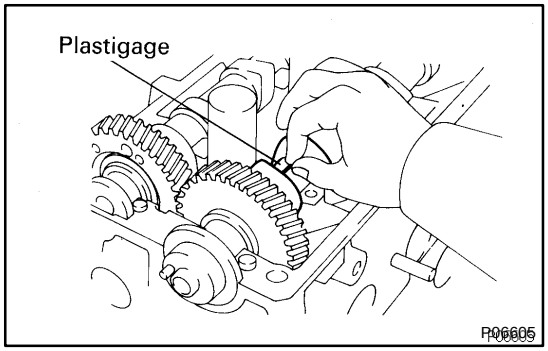

14. INSPECT CAMSHAFT JOURNAL OIL CLEARANCE

(a) Clean the bearing caps and camshaft journals.

(b) Place the camshafts on the cylinder head.

(c) Lay a strip of Plastigage across each of the camshaft journals.

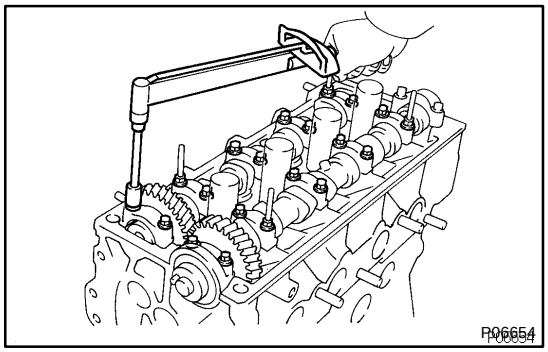

(d) Install the bearing caps (See page EM-44).

NOTICE:

Do not turn the camshaft.

(e) Remove the bearing caps.

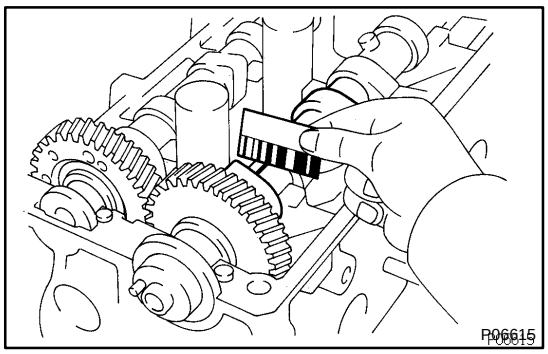

(f) Measure the Plastigage at its widest point.
Standard oil clearance:
0.035 - 0.072 mm (0.0014 - 0.0028 in.)
Maximum oil clearance:
0.10 mm (0.0039 in.)

If the oil clearance is greater than maximum, replace the camshaft. If necessary, replace the bearing caps and cylinder head as a set.

(g) Completely remove the Plastigage.

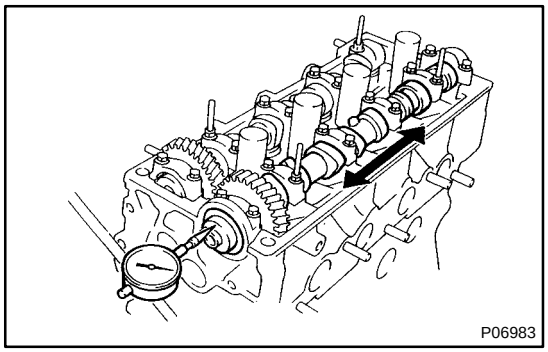

15. INSPECT CAMSHAFT THRUST CLEARANCE

(a) Install the camshaft (See page EM-44).

(b) Using a dial indicator, measure the thrust clearance while moving the camshaft back and forth.
Standard thrust clearance:
Intake
0.030 - 0.085 mm (0.0012 - 0.0033 in.)
Exhaust
0.035 - 0.090 mm (0.0014 - 0.0035 in.)
Maximum thrust clearance:
0.11 mm (0.0043 in.)

If the thrust clearance is greater than maximum, replace the camshaft. If necessary, replace the bearing caps and cylinder head as a set.

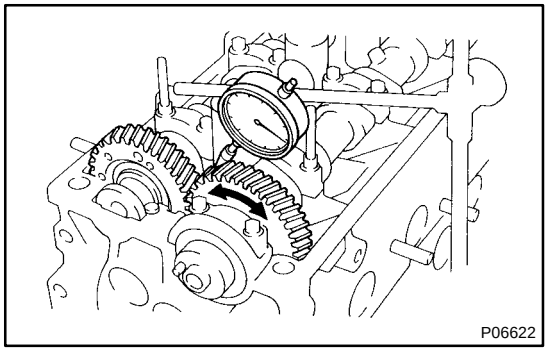

16. INSPECT CAMSHAFT GEAR BACKLASH

(a) Install the camshafts without installing the intake camshaft sub-gear (See page EM-44).

(b) Using a dial indicator, measure the backlash.
Standard backlash:
0.020 - 0.200 mm (0.0008 - 0.0079 in.)
Maximum backlash:
0.30 mm (0.0188 in.)

If the backlash is greater than maximum, replace the camshafts.

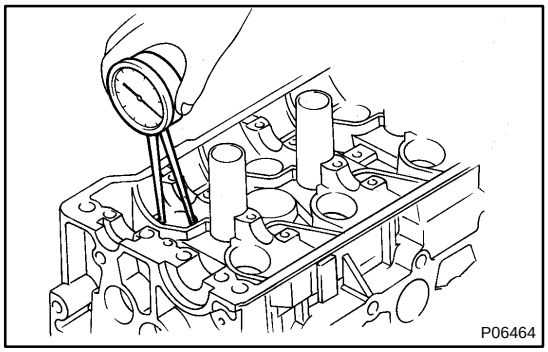

17. INSPECT VALVE LIFTERS AND LIFTER BORES

(a) Using a caliper gauge, measure the lifter bore diameter of the cylinder head.
Lifter bore diameter:
31.000 - 31.025 mm (1.2205 - 1.2215 in.)

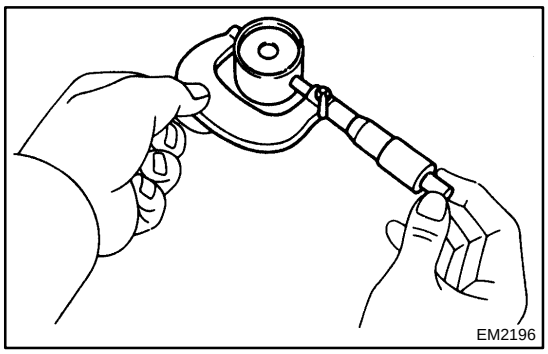

(b) Using a micrometer, measure the lifter diameter.
Lifter diameter:
30.966 - 30.976 mm (1.2191 - 1.2195 in.)

(c) Subtract the lifter diameter measurement from the lifter bore diameter measurement.
Standard oil clearance:
0.024 - 0.059 mm (0.0009 - 0.0023 in.)
Maximum oil clearance:
0.07 mm (0.0028 in.)

If the oil clearance is greater than maximum, replace the lifter. If necessary, replace the cylinder head.

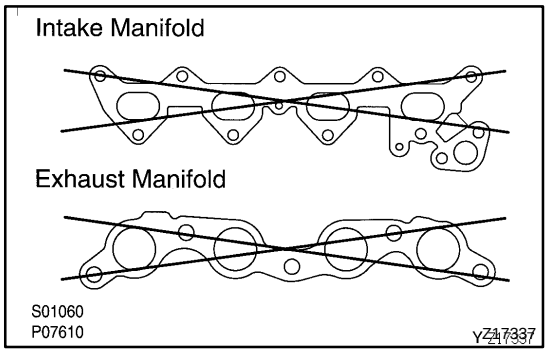

18. INSPECT INTAKE AND EXHAUST MANIFOLDS

Using a precision straight edge and thickness gauge, measure the surface contacting the cylinder head for warpage.

Maximum warpage:
Intake manifold
0.20 mm (0.0079 in.)
Exhaust manifold
0.30 mm (0.0118 in.)

If warpage is greater than maximum, replace the manifold.

IG0GP-01

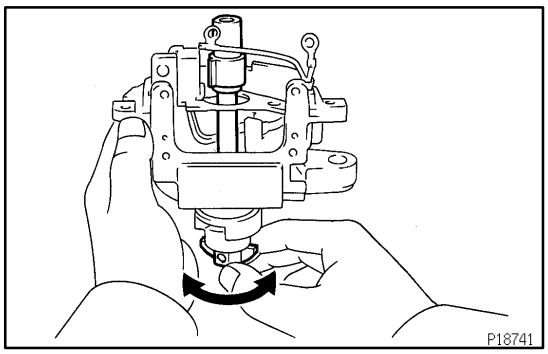

INSPECTION

INSPECT SHAFT

Turn the shaft and check that it is not rough or worn.

If it feels rough or worn, replace the distributor housing assembly.

SF0W4-03

INSPECTION

1. REMOVE ECM
2. INSPECT ECM (See page DI-18)
3. REINSTALL ECM

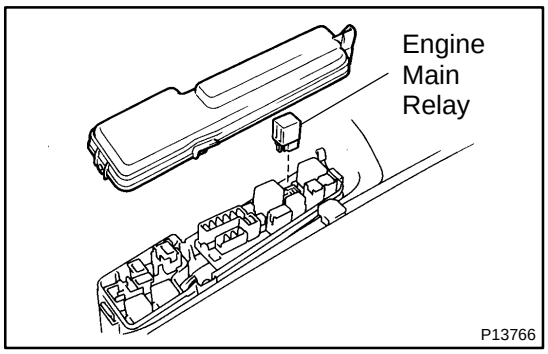

ENGINE MAIN RELAY

CO0ZL-02

INSPECTION

1. REMOVE RELAY BOX COVER

2. REMOVE ENGINE MAIN RELAY (Marking: ENGINE MAIN)

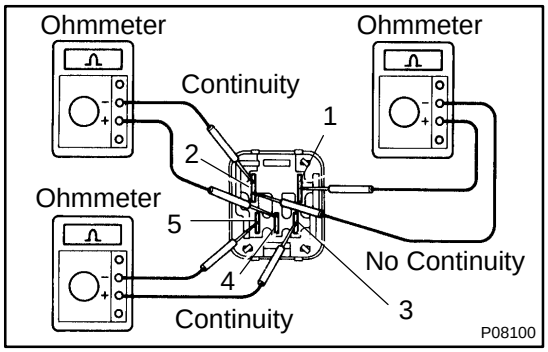

3. INSPECT RELAY CONTINUITY

(a) Using an ohmmeter, check that there is continuity between terminals 3 and 5.

If there is no continuity, replace the relay.

(b) Check that there is continuity between terminals 2 and 4.

If there is no continuity, replace the relay.

(c) Check that there is no continuity between terminals 1 and 2.

If there is continuity, replace the relay.

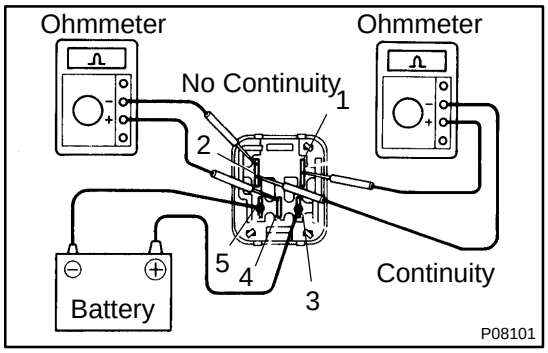

4. INSPECT RELAY OPERATION

(a) Apply battery voltage across terminals 3 and 5.

(b) Using an ohmmeter, check that there is no continuity between terminals 2 and 4.

If there is continuity, replace the relay.

(c) Check that there is continuity between terminals 1 and 2.

If there is no continuity, replace the relay.

5. REINSTALL ENGINE MAIN RELAY

6. REINSTALL RELAY BOX COVER

SF0VA-03

INSPECTION

INSPECT FUEL TANK AND LINE

(a) Check the fuel lines for cracks or leakage, and all connections for deformation.

(b) Check the fuel tank vapor vent system hoses and connections for looseness, sharp bends or damage.

(c) Check the fuel tank for deformation, cracks, fuel leakage or tank band looseness.

(d) Check the filler neck for damage or fuel leakage.

(e) Hose and tube connections are as shown in the illustration.

If a problem is found, repair or replace the part as necessary.

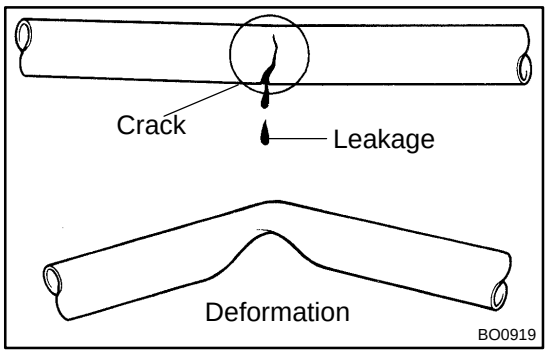

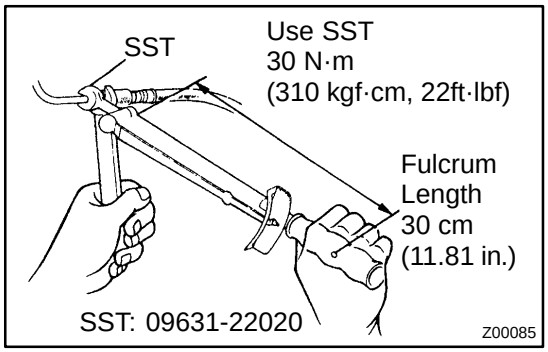

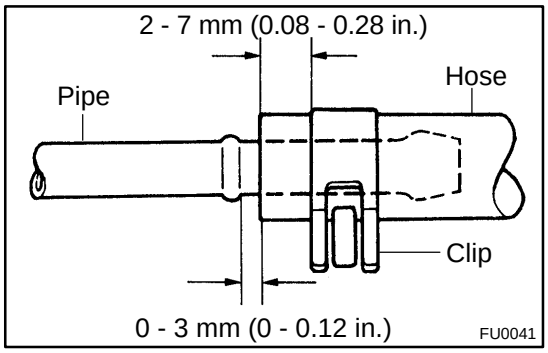

SF1R8-01

INSPECTION

1. **REMOVE SCUFF PLATE, COWL SIDE TRIM, RH FRONT SEAT AND FLOOR CARPET**
2. **DISCONNECT HEATED OXYGEN SENSOR CONNECTOR**

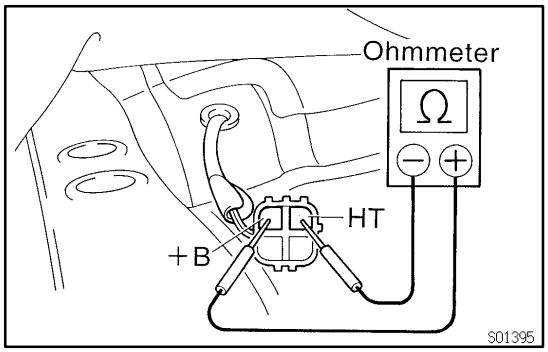

3. **INSPECT HEATER RESISTANCE OF HEATED OXYGEN SENSOR**

Using an ohmmeter, measure the resistance between the terminals +B and HT

11 - 16 Ω at 20 °C (68 °F)

If the resistance is not as specified, replace the heated oxygen sensor.

4. **RECONNECT HEATED OXYGEN SENSOR CONNECTOR**
5. **REINSTALL FLOOR CARPET, RH FRONT SEAT, COWL SIDE TRIM AND SCUFF PLATE**

IDLE SPEED

EM1BW-01

INSPECTION

1. INITIAL CONDITIONS

(a) Engine at normal operating temperature
(b) Air cleaner installed
(c) All pipes and hoses of air induction system connected
(d) All vacuum lines properly connected
(e) MFI system wiring connectors fully plugged
(f) All operating accessories switched OFF
(g) Ignition timing set correctly
(h) Transmission in neutral position

2. CONNECT TOYOTA HAND-HELD TESTER OR OBDII SCAN TOOL
(See page EM-9)

3. INSPECT IDLE SPEED

(a) Race the engine at 2,500 rpm for approx. 90 seconds.
(b) Check the idle speed.
Torque:Idle speed (w/ Cooling fan OFF):
700 ± 50 rpm

If the idle speed is not as specified, check the IAC system.

4. DISCONNECT TOYOTA HAND-HELD TESTER OR OBDII SCAN TOOL

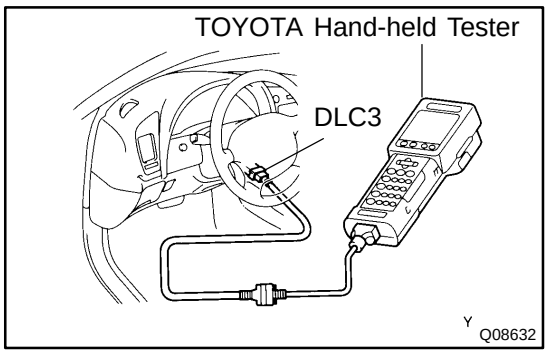

IGNITION TIMING

EM1BV-02

INSPECTION

1. WARM UP ENGINE

Allow the engine to warm up to normal operating temperature.

2. CONNECT TOYOTA HAND-HELD TESTER OR OBDII SCAN TOOL

(a) Connect the TOYOTA hand-held tester or OBDII scan tool to the DLC3.

(b) Please refer to the TOYOTA hand-held tester or OBDII scan tool operators manual for further details.

3. CONNECT TIMING LIGHT TO ENGINE

4. INSPECT IGNITION TIMING

(a) Using SST, connect terminals TE1 and E1 of the DLC1.

SST 09843-18020

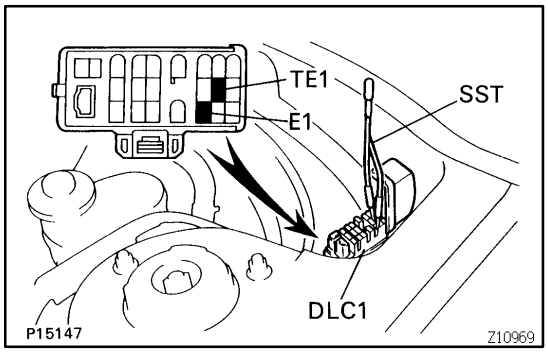

HINT:

After engine rpm is kept at 1,000 - 1,500 rpm for 5 seconds, check that it returns to idle speed.

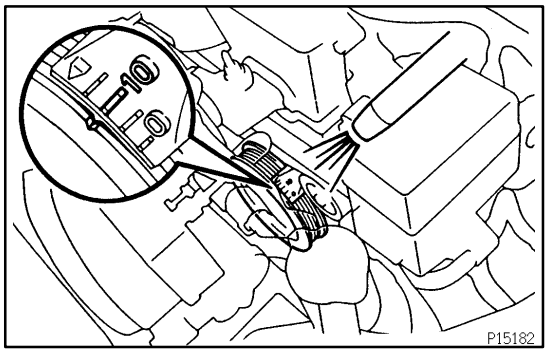

(b) Using a timing light, check the ignition timing.

Ignition timing:
10° BTDC @ idle
(Transmission in neutral position)

(c) Remove the SST from the DLC1.

SST 09843-18020

5. FURTHER CHECK IGNITION TIMING

Ignition timing:
5 - 15° BTDC @ idle
(Transmission in neutral position)

HINT:

The timing mark moves in a range between 5° and 15°.

6. DISCONNECT TIMING LIGHT FROM ENGINE

7. DISCONNECT TOYOTA HAND-HELD TESTER OR OBDII SCAN TOOL

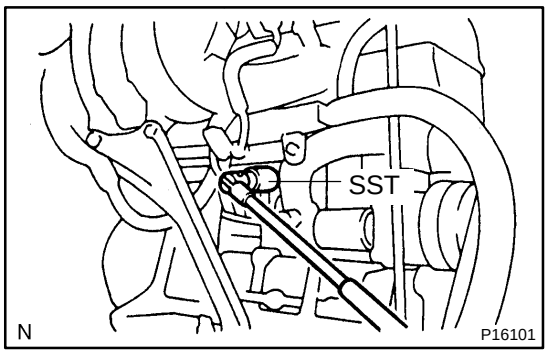

KNOCK SENSOR

SF0VY-03

INSPECTION

1. REMOVE KNOCK SENSOR 1

(a) Disconnect the knock sensor connector.

(b) Using SST, remove the knock sensor.

SST 09816-30010

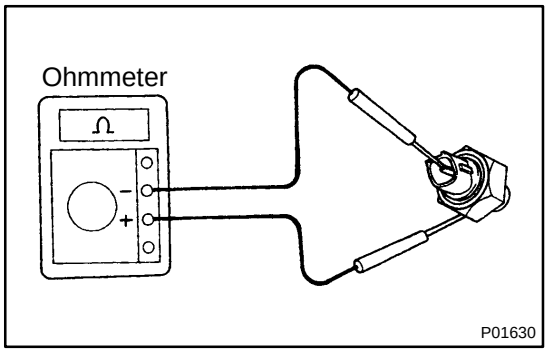

2. INSPECT KNOCK SENSOR

Using an ohmmeter, check that there is no continuity between the terminal and body.

If there is continuity, replace the sensor.

3. REINSTALL KNOCK SENSOR

(a) Using SST, install the knock sensor.

SST 09816-30010

Torque: 44 N·m (450 kgf·cm, 33 ft·lbf)

(b) Connect the knock sensor connector.

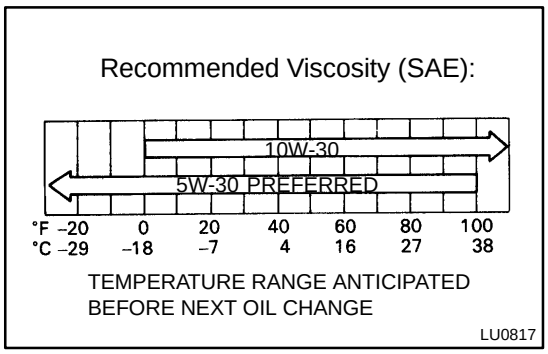

OIL AND FILTER

LU0JT-01

INSPECTION

1. CHECK ENGINE OIL QUALITY

Check the oil for deterioration, entry of water, discoloring or thinning.

If the quality is visibly poor, replace the oil.

2. CHECK ENGINE OIL LEVEL

The oil level should be between the "L" and "F" marks on the dipstick.

If low, check for leakage and add oil up to "F" mark.

Oil grade:

API grade SH, Energy-Conserving II multigrade engine oil or ILSAC multigrade engine oil.

Recommended viscosity is as shown in the illustration.

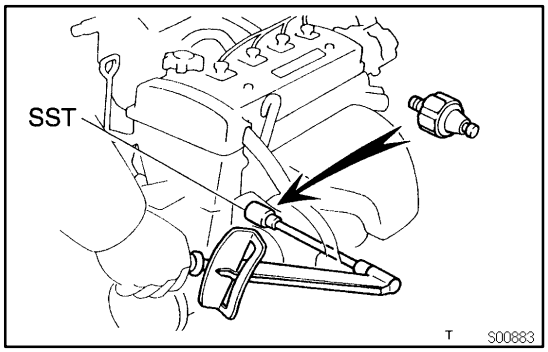

3. REMOVE OIL PRESSURE SWITCH, AND INSTALL OIL PRESSURE GAUGE

(a) Using SST, remove the oil pressure switch.
SST 09816-30010

(b) Install the oil pressure gauge.

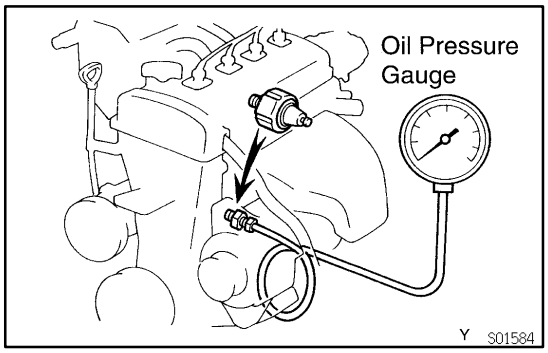

4. WARM UP ENGINE

Allow the engine to warm up to normal operating temperature.

5. CHECK OIL PRESSURE

Oil pressure:

At idle

29 kPa (0.3 kgf/cm^2, 4.3 psi) or more

At 3,000 rpm

245 - 490 kPa (2.5 - 5.0 kgf/cm^2, 36 - 71 psi)

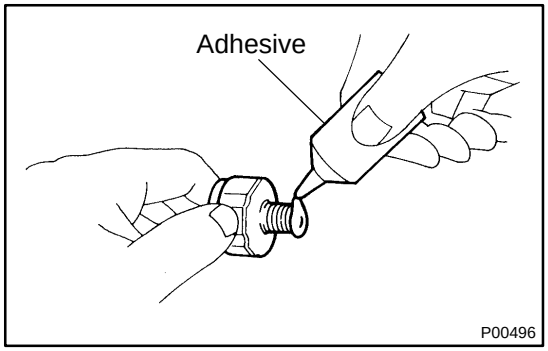

6. REMOVE OIL PRESSURE GAUGE, AND REINSTALL OIL PRESSURE SWITCH

(a) Remove the oil pressure gauge.

(b) Apply adhesive to 2 or 3 threads of the oil pressure switch.

Adhesive:

Part No. 08833-00080, THREE BOND 1344, LOCTITE 242 or equivalent

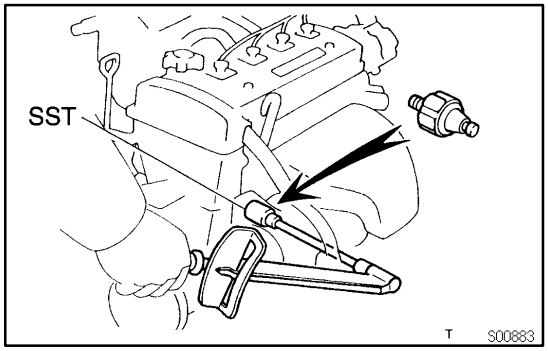

(c) Using SST, install the oil pressure switch.
SST 09816-30010

7. START ENGINE, AND CHECK FOR OIL LEAKS

SR16Y-02

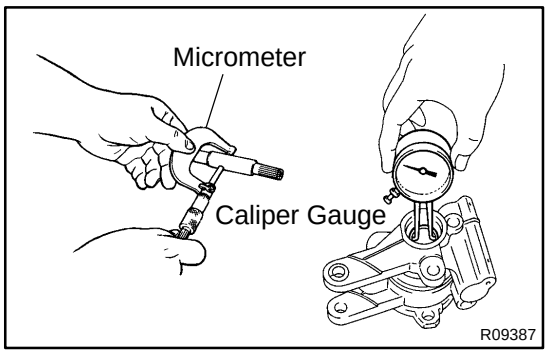

INSPECTION

NOTICE:

When using a vise, do not overtighten it.

1. MEASURE OIL CLEARANCE BETWEEN VANE PUMP SHAFT AND BUSHING

Using a micrometer and a caliper gauge, measure the oil clearance.

Standard clearance:
0.01 - 0.03 mm (0.0004 - 0.0012 in.)
Maximum clearance: 0.07 mm (0.0028 in .)

If it is more than maximum, replace the front housing and vane pump shaft.

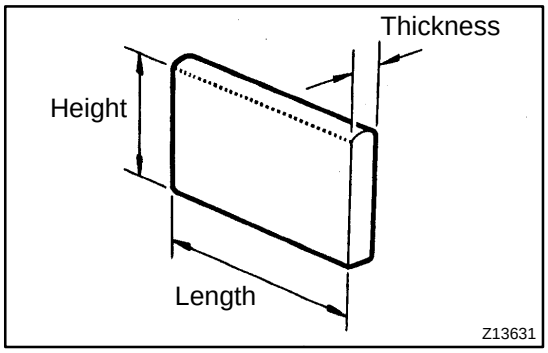

2. INSPECT VANE PUMP ROTOR AND VANE PLATES

(a) Using a micrometer, measure the height, thickness and length of the 10 plates.

Minimum height: 81 mm (0.319 in.)
Minimum thickness: 1.797 mm (0.0707 in.)
Minimum length: 14.988 mm (0.5901 in.)

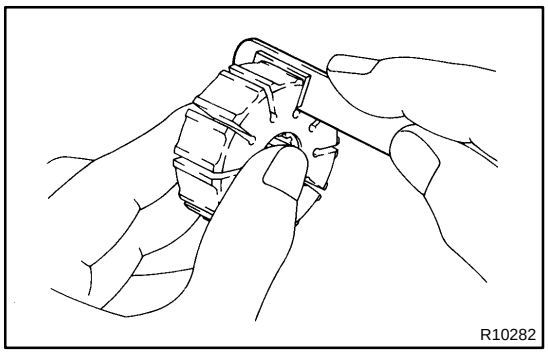

(b) Using a feeler gauge, measure the clearance between the rotor groove and plate.

Maximum clearance: 0.03 mm (0.0012 in.)

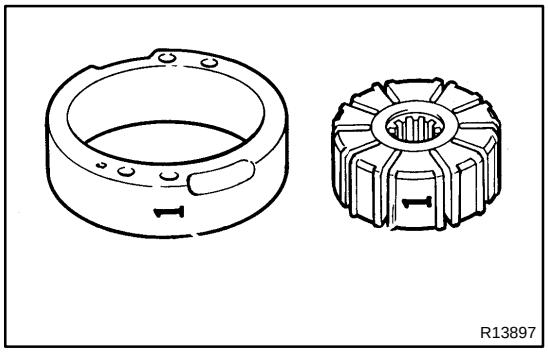

If it is more than maximum, replace the plate and/or rotor with one having the same mark stamped on the cam ring.

Inscribed mark: 1, 2, 3, 4 or None

HINT:
There are 5 vane plate lengths with the following rotor and cam ring marks:

Rotor and cam ring mark	Vane plate part number	Vane plate length mm (in.)
None	44345-12010	14.996-14.998 (0.59039-0.59047)
1	44345-12020	14.994-14.996 (0.59032-0.59039)
2	44345-12030	14.992-14.994 (0.59024-0.59032)
3	44345-12040	14.990-14.992 (0.59016-0.59024)
4	44345-12050	14.988-14.990 (0.59008-0.59016)

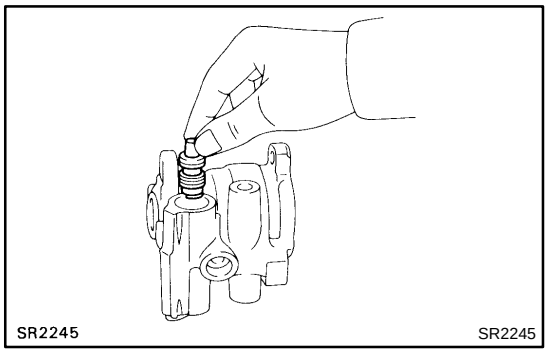

3. INSPECT FLOW CONTROL VALVE

(a) Coat the valve with power steering fluid and check that it falls smoothly into the valve hole by its own weight.

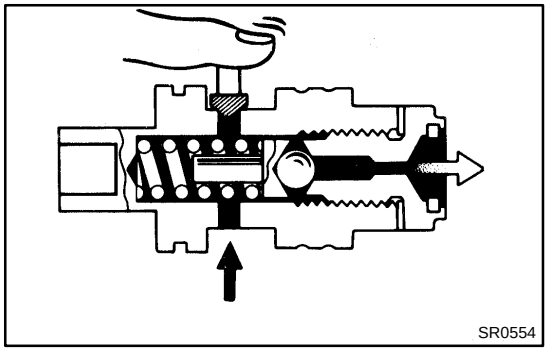

(b) Check the flow control valve for leakage.
Close one of the holes and apply 392-490 kPa (4-5 kgf/cm^2, 57-71 psi) of compressed air into the opposite side, and confirm that air does not come out from the end hole.

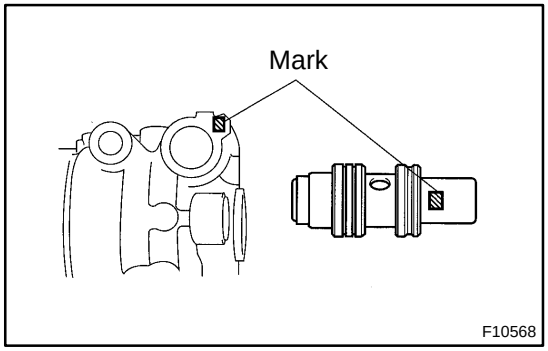

If necessary, replace the valve with one having the same letter as inscribed on the front housing.

Mark: A, B, C, D, E or F

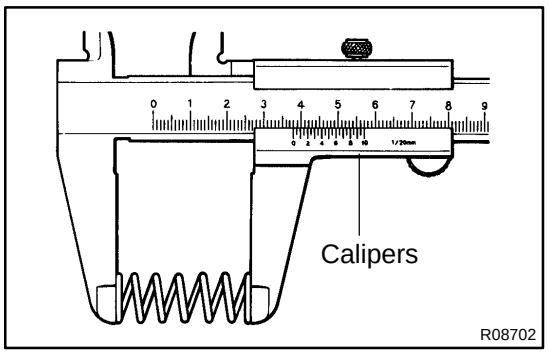

4. INSPECT SPRING

Using calipers, measure the free length of the spring.

Minimum free length: 36.0 mm (1.42 in.)

If it is not within the specification, replace the spring.

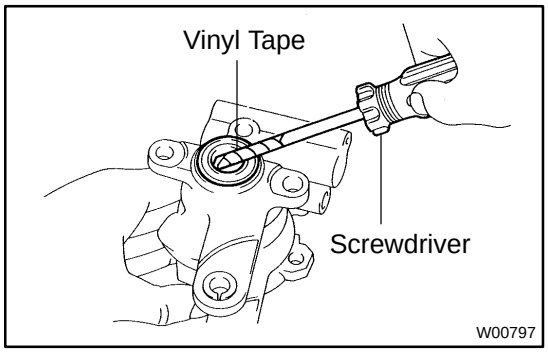

5. IF NECESSARY, REPLACE OIL SEAL

(a) Using a screwdriver, pry out the oil seal.

HINT:

Tape the screwdriver tip before use.

NOTICE:

Be careful not to damage the front housing.

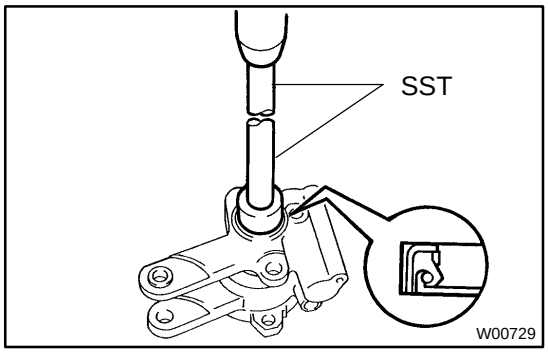

(b) Coat a new oil seal lip with power steering fluid.

(c) Using SST, press in the oil seal.

SST 09950-60010 (09951-00230),
09950-70010 (09951-07100)

NOTICE:

Make sure to install the oil seal facing the correct direction.

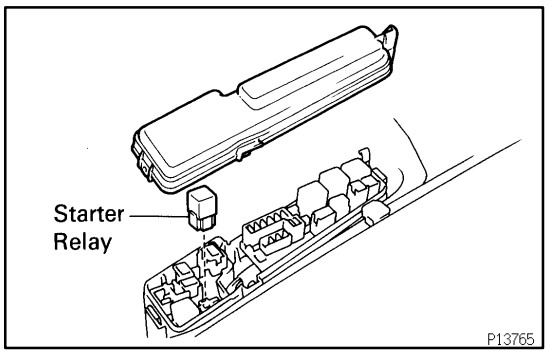

STARTER RELAY

ST0JU-01

INSPECTION

1. REMOVE STARTER RELAY (Marking: ST)

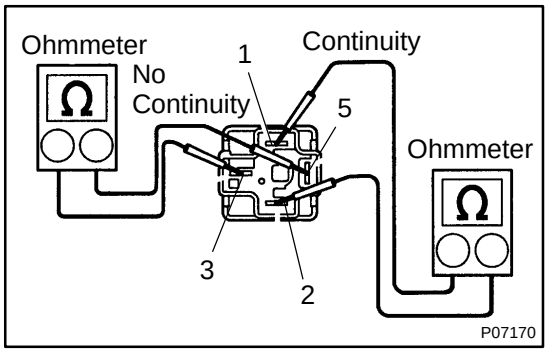

2. INSPECT RELAY CONTINUITY

(a) Using an ohmmeter, check that there is continuity between terminals 1 and 2.

If there is no continuity, replace the relay.

(b) Check that there is no continuity between terminals 3 and 5.

If there is continuity, replace the relay.

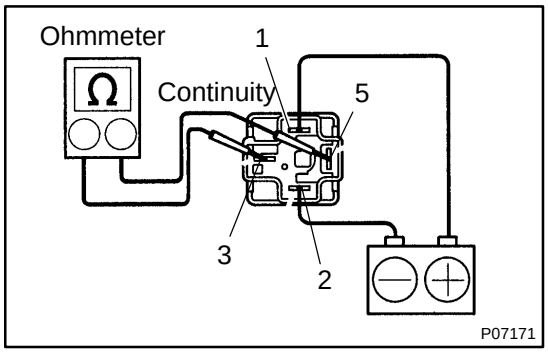

3. INSPECT RELAY OPERATION

(a) Apply battery positive voltage across terminals 1 and 2.

(b) Using an ohmmeter, check that there is continuity between terminals 3 and 5.

If there is no continuity, replace the relay.

4. REINSTALL STARTER RELAY

ST0JY-02

INSPECTION

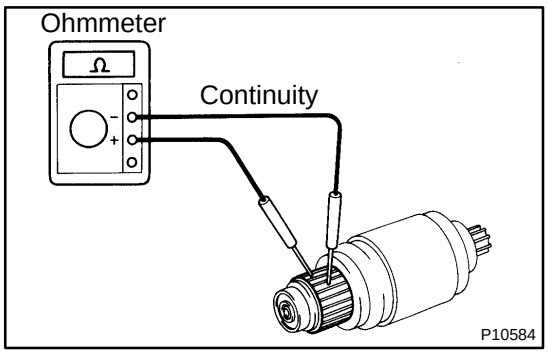

1. INSPECT COMMUTATOR FOR OPEN CIRCUIT

(a) Inspect the commutator for open circuit.
Using an ohmmeter, check that there is continuity between the segments of the commutator.

If there is no continuity between any segment, replace the armature.

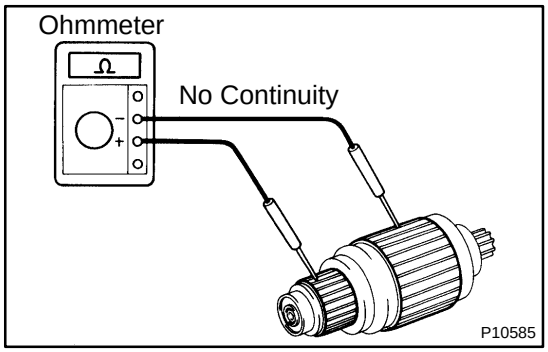

(b) Inspect the commutator for ground.
Using an ohmmeter, check that there is no continuity between the commutator and armature coil core.

If there is continuity, replace the armature.

2. INSPECT COMMUTATOR FOR GROUND

(a) Inspect the commutator for dirty and burnt surfaces.

If the surface is dirty or burnt, correct with sandpaper (No.400) or a lathe.

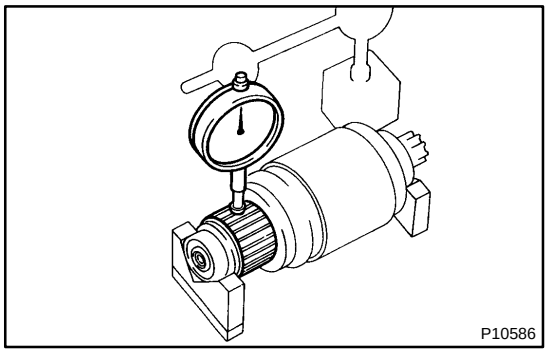

(b) Inspect the commutator circle runout.
(1) Place the commutator on V-blocks.
(2) Using a dial gauge, measure the circle runout.
Maximum circle runout:
0.05 mm (0.0020 in.)

If the circle runout is greater than maximum, correct it on a lathe.

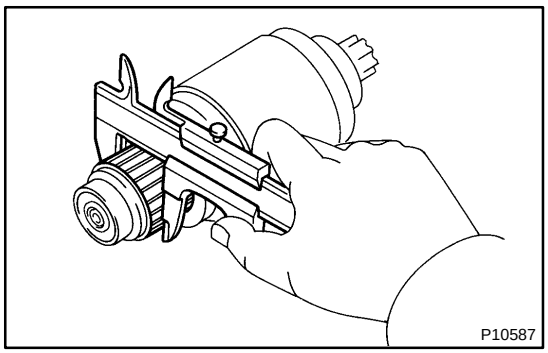

(c) Inspect the commutator diameter.
Using vernier calipers, measure the commutator diameter.
Standard diameter:
30 mm (1.18 in.)
Minimum diameter:
29 mm (1.14 in.)

If the diameter is less than minimum, replace the armature.

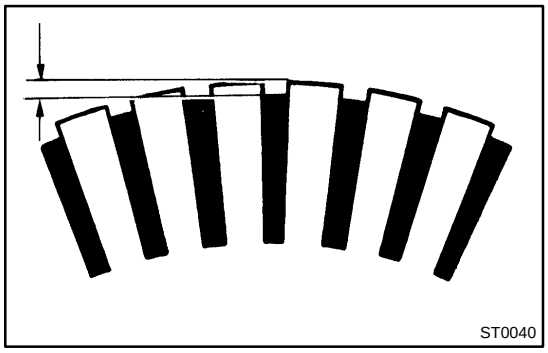

(d) Inspect the undercut depth.
Check that the undercut depth is clean and free of foreign materials. Smooth out the edge.
Standard undercut depth:
0.6 mm (0.024 in.)
Minimum undercut depth:
0.2 mm (0.008 in.)

If the undercut depth is less than minimum, correct it with a hacksaw blade.

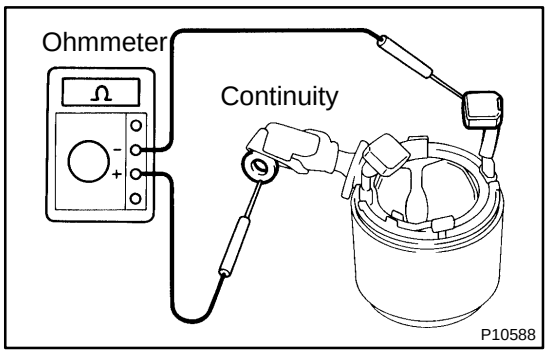

3. INSPECT FIELD FRAME (FIELD COIL)

(a) Inspect the field coil for open circuit.

Using an ohmmeter, check that there is continuity between the lead wire and field coil brush lead.

If there is no continuity, replace the field frame.

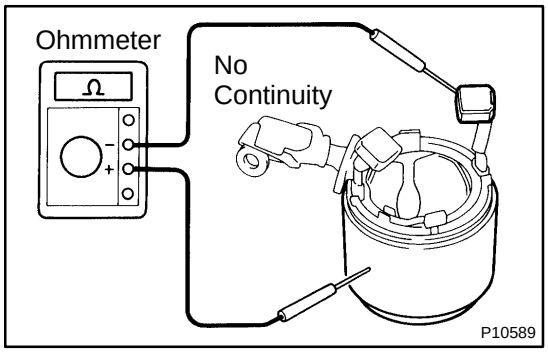

(b) Inspect the field coil ground.

Using an ohmmeter, check that there is no continuity between the field coil end and field frame.

If there is continuity, repair or replace the field frame.

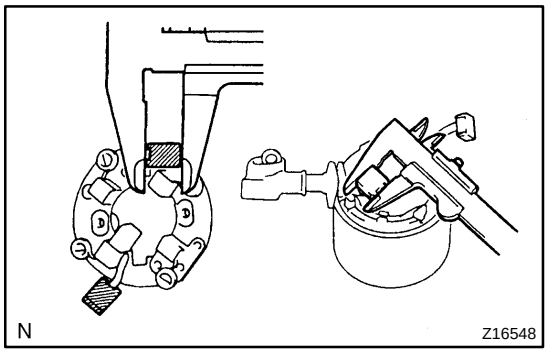

4. INSPECT BRUSH LENGTH

Using vernier calipers, measure the brush length.

Standard length:
15.0 mm (0.591 in.)
Minimum length:
8.0 mm (0.315 in.)

If the length is less than minimum, replace the brush holder and field frame.

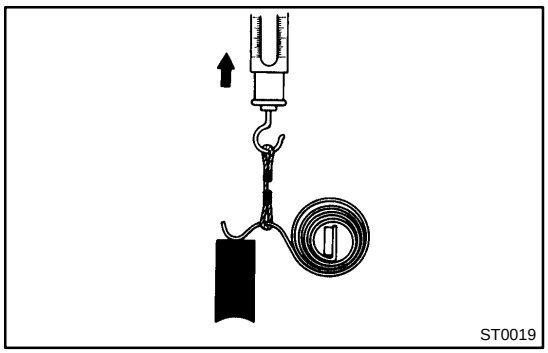

5. INSPECT BRUSH SPRING LOAD

Take the pull scale reading the instant the brush spring separates from the brush.

Spring installed load:
1.2 kW type:
13.7 - 19.6 N (1.4 - 2.0 kgf, 3.1 - 4.4 lbf)
1.4 kW type:
17.6 - 23.5 N (1.8 - 2.4 kgf, 4.0 - 5.3 lbf)
Minimum spring installed load:
1.2 kW type:
9.8 N (1.0 kgf, 2.2 lbf)
1.4 kW type:
11.8 N (1.2 kgf, 2.6 lbf)

If the installed load is not within specification, replace the brush springs.

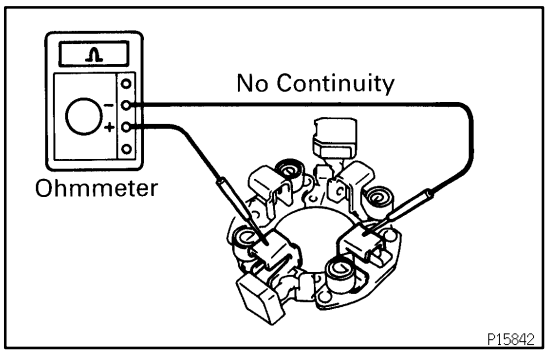

6. INSPECT BRUSH HOLDER INSULATION

Using an ohmmeter, check that there is no continuity between the positive (+) and negative (-) brush holders.

If there is continuity, repair or replace the brush holder.

7. INSPECT GEAR TEETH

Check the gear teeth on the pinion gear, idle gear and clutch assembly for wear or damage.

If damaged, replace the gear or clutch assembly.

If damaged, also check the ring gear of the flywheel/drive plate for wear or damage.

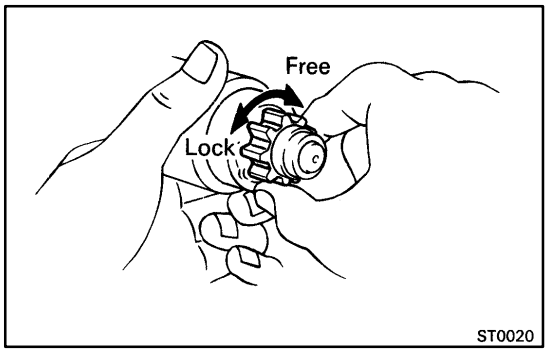

8. INSPECT CLUTCH

Rotate the clutch pinion gear clockwise and check that it turns freely.

Try to rotate the clutch pinion gear counter-clockwise and check that it locks.

If necessary, replace the clutch assembly.

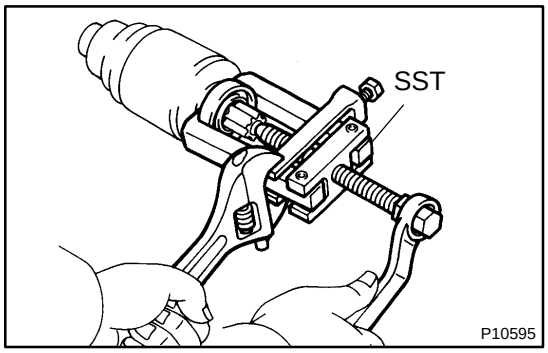

9. INSPECT FRONT BEARING

Turn each bearing by hand while applying inward force.

If resistance is felt or the bearing sticks, replace the bearing.

10. IF NECESSARY, REPLACE FRONT BEARING

(a) Using SST, remove the bearing.
SST 09286-4601 1

(b) Using SST and a press, press in a new bearing.

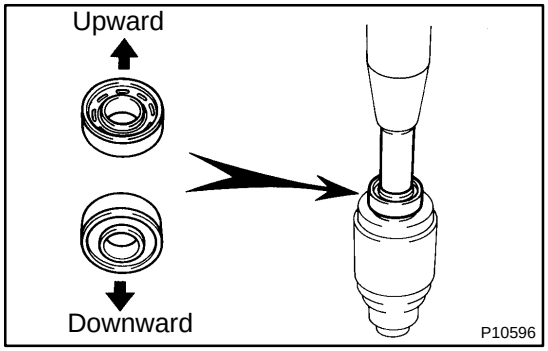

NOTICE:

Be careful of the bearing installation direction.

SST 09820-00030

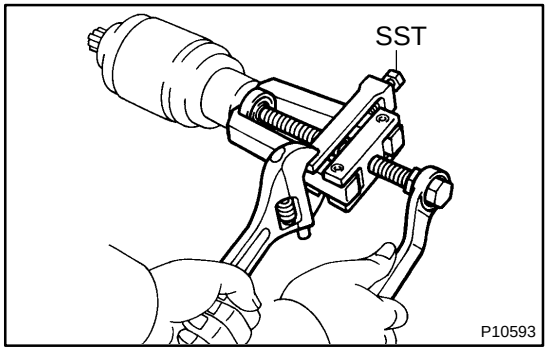

11. INSPECT REAR BEARING

Turn each bearing by hand while applying inward force.

If resistance is felt or the bearing sticks, replace the bearing.

12. IF NECESSARY, REPLACE REAR BEARING

(a) Using SST, remove the bearing.
SST 09286-4601 1

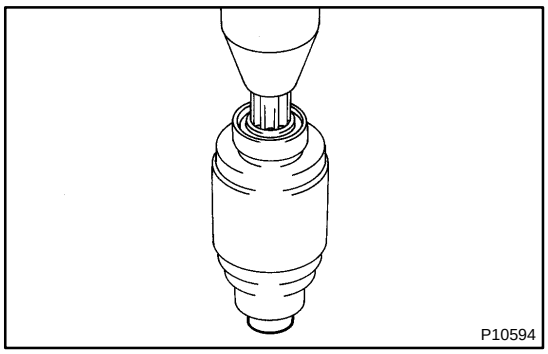

(b) Using a press, press in a new bearing.

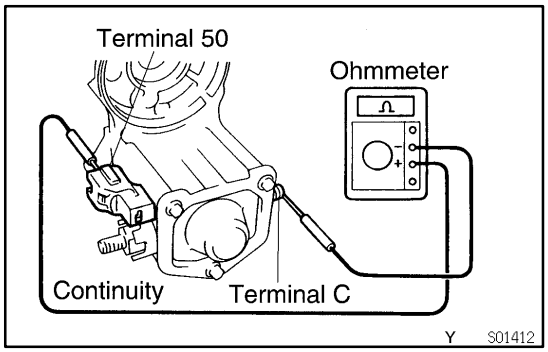

13. INSPECT MAGNETIC SWITCH

(a) Do pull-in coil open circuit test.
Using an ohmmeter, check that there is continuity between terminals 50 and C.

If there is no continuity, check and replace the magnetic switch.

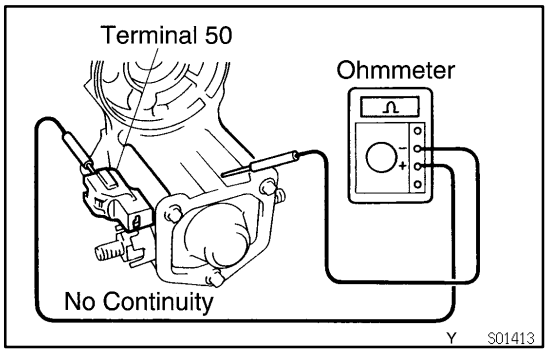

(b) Do hold-in coil open circuit test.
Using an ohmmeter, check that there is continuity between terminal 50 and the switch body.

If there is no continuity, replace the magnetic switch.

CO0ZB-02

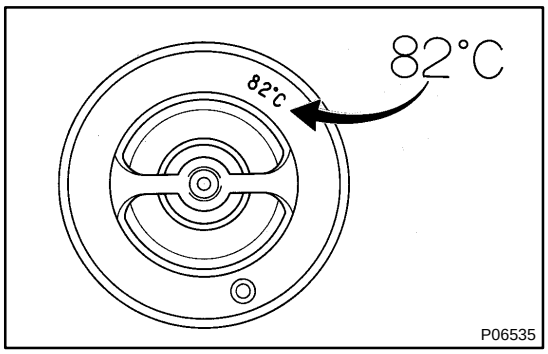

INSPECTION

INSPECT THERMOSTAT

HINT:

The thermostat is numbered with the valve opening temperature.

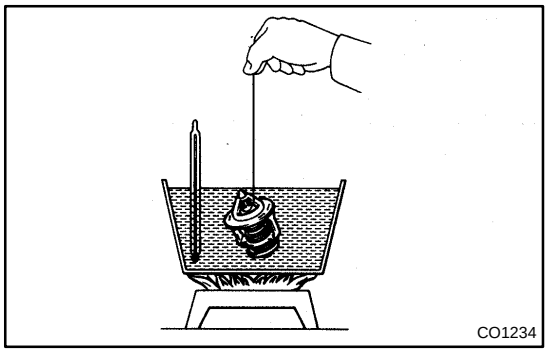

(a) Immerse the thermostat in water and gradually heat the water.

(b) Check the valve opening temperature.

Valve opening temperature:

80 - 84˚C (176 - 183˚F)

If the valve opening temperature is not as specified, replace the thermostat.

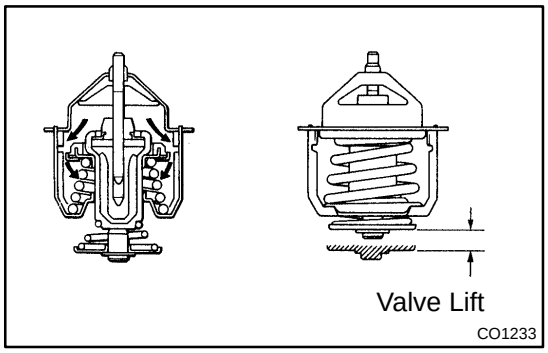

(c) Check the valve lift.

Valve lift:

8 mm (0.31 in.) or more at 95˚C (203˚F)

If the valve lift is not as specified, replace the thermostat.

(d) Check that the valve is fully closed when the thermostat is at low temperatures (below 40˚C (104˚F)).

If not closed, replace the thermostat.

EM1BZ-02

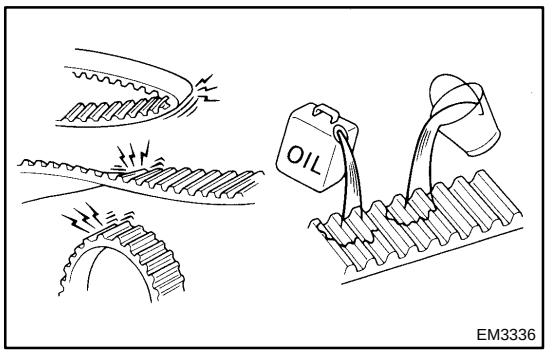

INSPECTION

1. INSPECT TIMING BELT

NOTICE:

Do not bend, twist or turn the timing belt inside out.Do not allow the timing belt to come into contact with oil, water or steam.Do not utilize timing belt tension when installing or removing the mounting bolt of the camshaft timing pulley.

If there are any defects as shown in the illustration, check these points:

(a) Premature parting
- Check the proper installation.
- Check the timing cover gasket for damage and proper installation.

(b) If the belt teeth are cracked or damaged, check to see if either camshaft or water pump is locked.

(c) If there is noticeable wear or cracks on the belt face, check to see if there are nicks on the side of the idler pulley lock.

(d) If there is wear or damage on only one side of the belt, check the belt guide and the alignment of each pulley.

(e) If there is noticeable wear on the belt teeth, check the timing cover for damage, correct gasket installation, and for foreign material on the pulley teeth.

If necessary, replace the timing belt.

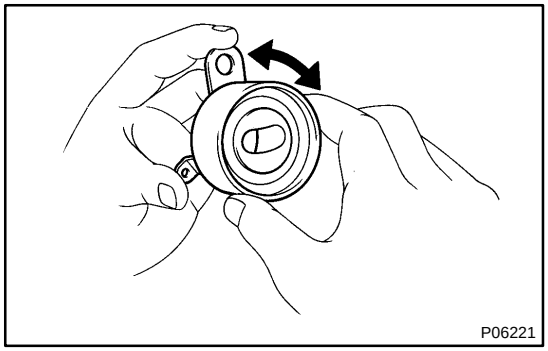

2. INSPECT IDLER PULLEY

Check that the idler pulley turns smoothly.

If necessary, replace the idler pulley.

3. INSPECT TENSION SPRING

(a) Measure the free length of tension spring.

Free length:

31.76 mm (1.250 in.)

If the free length is not as specified, replace the tension spring.

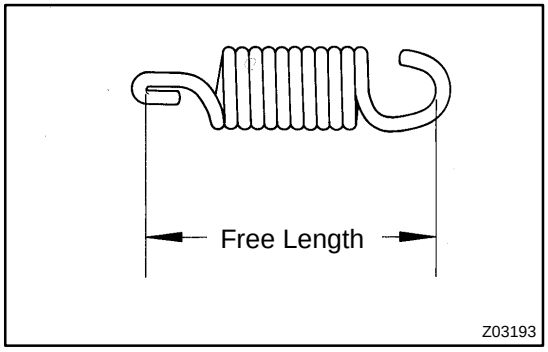

(b) Measure the tension of the tension spring at the specified installed length.

Installed tension:

At 37.6 mm (1.480 in.)

47.5 - 51.5 N (4.85 - 5.25 kgf, 10.7 - 11.6 lbf)

If the installed tension is not as specified, replace the tension spring.

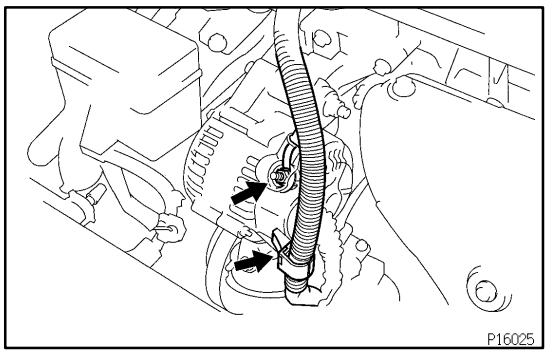

VALVE CLEARANCE

INSPECTION

EM1BU-01

HINT:

Inspect and adjust the valve clearance when the engine is cold.

1. DISCONNECT WIRE AND CLAMP FROM GENERATOR

2. DISCONNECT HIGH- TENSION CORD FROM CYLINDER HEAD COVER

3. REMOVE CYLINDER HEAD COVER

Remove the 4 cap nuts, seal washers, head cover and gasket.

4. SET NO.1 CYLINDER TO TDC/COMPRESSION

(a) Turn the crankshaft pulley and align its groove with the timing mark ”0” of the No.1 timing belt cover.

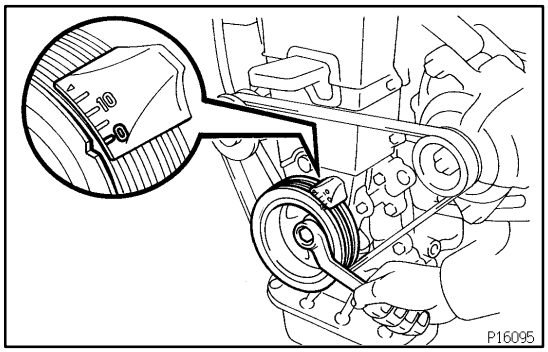

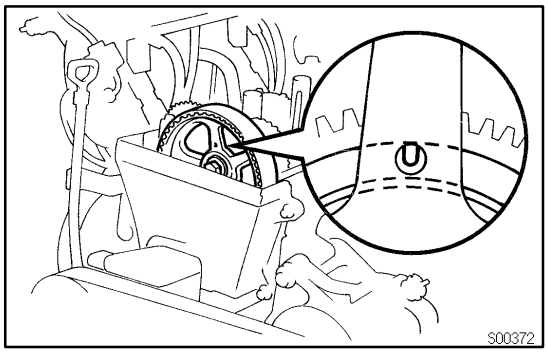

(b) Check that the hole of the camshaft timing pulley is aligned with the timing mark of the bearing cap.
If not, turn the crankshaft one revolution (360˚).

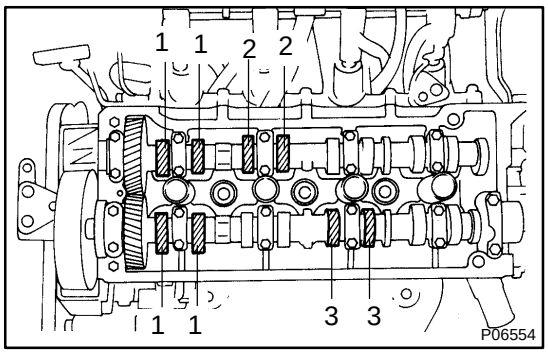

5. INSPECT VALVE CLEARANCE

(a) Check only the valves indicated.

- Using a thickness gauge, measure the clearance between the valve lifter and camshaft.
- Record the out-of-specification valve clearance measurements. They will be used later to determine the required replacement adjusting shim.

Valve clearance (Cold):

Intake

0.15 - 0.25 mm (0.006 - 0.010 in.)

Exhaust

0.25 - 0.35 mm (0.010 - 0.014 in.)

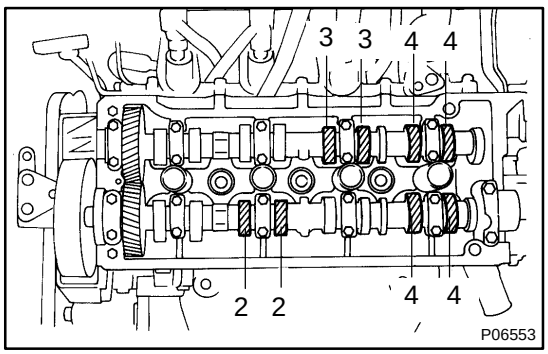

(b) Turn the crankshaft pulley one revolution (360˚) and align the its groove with timing mark ”0” of the No.1 timing belt cover.

(c) Check only the valves indicated as shown. Measure the valve clearance (See procedure in step (a)).

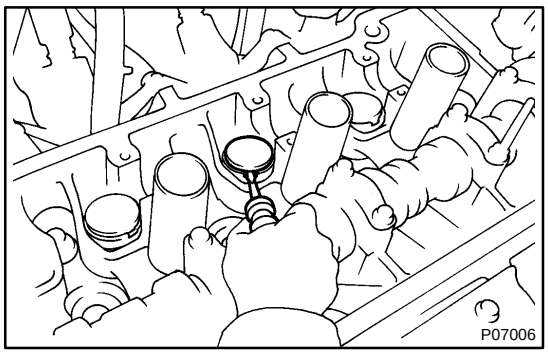

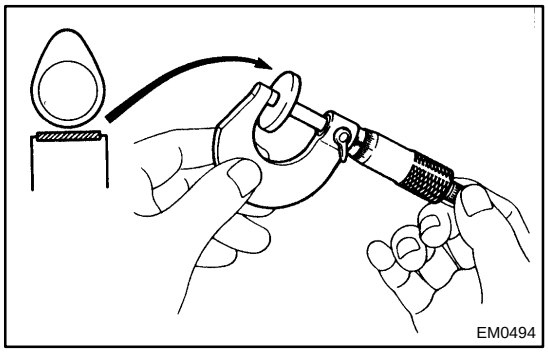

6. Intake:

ADJUST VALVE CLEARANCE

(a) Remove intake camshaft (See page EM-23).

(b) Remove adjusting shim.

Remove the adjusting shim with a small screwdriver.

(c) Determine the replacement adjusting shim size by following the Formula or Chart on these 3 pages:

- Using a micrometer, measure the thickness of the removed shim.
- Calculate the thickness of a new shim so that the valve clearance comes within the specified value.

T ..... Thickness of removed shim

A ..... Measured valve clearance

N ..... Thickness of new shim

Intake:

N = T + (A - 0.20 mm (0.008 in.))

- Select a new shim with a thickness as close as possible to the calculated value.

HINT:

Shims are available in 16 sizes in increments of 0.05 mm (0.0020 in.), from 2.55 mm (1.0039 in.) to 3.30 mm (0.1299 in.).

(d) Install new adjusting shim.

Place a new adjusting shim on the valve lifter.

(e) Install intake camshaft (See page EM-44).

(f) Recheck valve clearance.

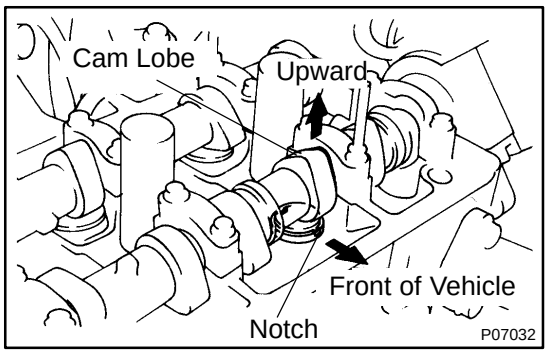

7. Exhaust:

ADJUST VALVE CLEARANCE

(a) Remove adjusting shim.

- Turn the crankshaft so that the cam lobe of the camshaft on the adjusting valve upward.
- Position the notch of the valve lifter facing the front of the vehicle.

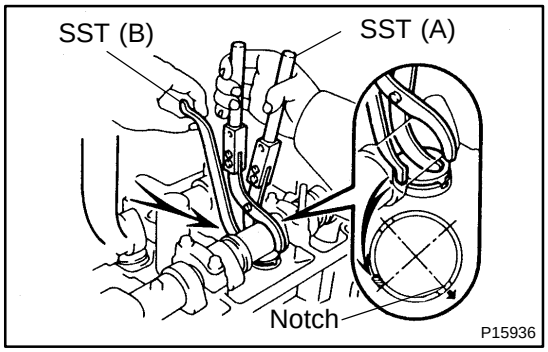

- Using SST (A), press down the valve lifter and place SST (B) between the camshaft and valve lifter. Remove SST (A).

SST 09248-55040 (09248-05011, 09248-05020)

HINT:

- Apply SST (B) at a slight angle on the side marked with "9", at the position shown in the illustration.

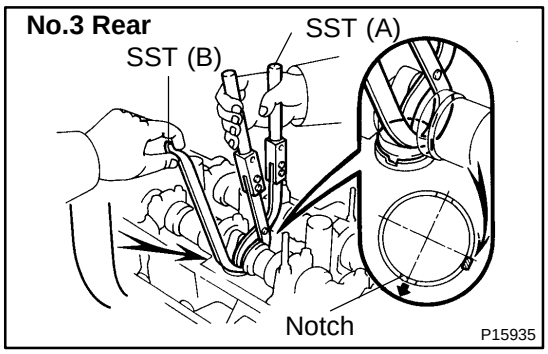

- When SST (B) is inserted too deeply, it will get pinched by the shim. To prevent it from being stuck, insert it gently from the intake side, at a slight angle.
- The shape of the cam makes it difficult to insert SST (B), from the intake side to the No.3 rear. For this shim, it is best approached from the exhaust side instead.

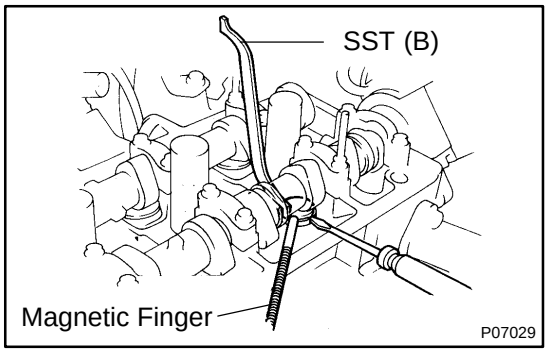

- Remove the adjusting shim with a small screwdriver and magnetic finger.

(b) Determine replacement adjusting shim size by following the Formula or Chart on these 2 pages:

- Using a micrometer, measure the thickness of the removed shim.
- Calculate the thickness of a new shim so that the valve clearance comes within the specified value.

T ..... Thickness of removed shim
A ..... Measured valve clearance
N ..... Thickness of new shim
Exhaust:
N = T + (A - 0.30 mm (0.012 in.))

- Select a new shim with a thickness as close as possible to the calculated value.

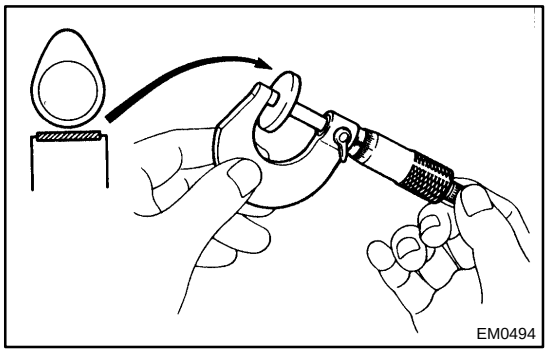

HINT:
Shims are available in 16 sizes in increments of 0.05 mm (0.0020 in.), from 2.55 mm (1.0039 in.) to 3.30 mm (0.1299 in.).

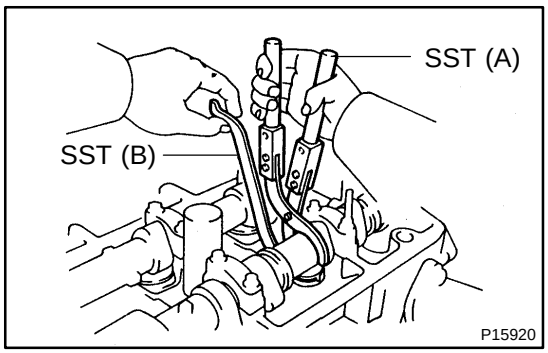

(c) Install new adjusting shim.

- Place a new adjusting shim on the valve lifter.
- Using SST (A), press down the valve lifter and remove SST (B).

SST 09248-55040 (09248-05011, 09248-05020)

(d) Recheck valve clearance.

8. INSTALL CYLINDER HEAD COVER (See page EM-44)

9. CONNECT HIGH- TENSION CORD TO CYLINDER HEAD COVER

10. CONNECT WIRE AND CLAMP TO GENERATOR

Adjusting Shim Selection Chart (Intake)

| Measured clearance mm (in.) \ Installed shim thickness mm (in.) | 2.500 (0.0984) | 2.520 (0.0992) | 2.540 (0.1000) | 2.550 (0.1004) | 2.560 (0.1008) | 2.580 (0.1018) | 2.600 (0.1024) | 2.620 (0.1031) | 2.640 (0.1039) | 2.650 (0.1043) | 2.660 (0.1047) | 2.670 (0.1051) | 2.680 (0.1055) | 2.690 (0.1059) | 2.700 (0.1063) | 2.710 (0.1067) | 2.720 (0.1071) | 2.730 (0.1075) | 2.740 (0.1079) | 2.750 (0.1083) | 2.760 (0.1087) | 2.770 (0.1091) | 2.780 (0.1094) | 2.790 (0.1098) | 2.800 (0.1102) | 2.810 (0.1106) | 2.820 (0.1110) | 2.830 (0.1114) | 2.840 (0.1118) | 2.850 (0.1122) | 2.860 (0.1126) | 2.870 (0.1130) | 2.880 (0.1134) | 2.890 (0.1138) | 2.900 (0.1142) | 2.910 (0.1146) | 2.920 (0.1150) | 2.930 (0.1154) | 2.940 (0.1157) | 2.950 (0.1161) | 2.960 (0.1165) | 2.970 (0.1169) | 2.980 (0.1173) | 2.990 (0.1177) | 3.000 (0.1181) | 3.010 (0.1185) | 3.020 (0.1189) | 3.030 (0.1193) | 3.040 (0.1197) | 3.050 (0.1201) | 3.060 (0.1205) | 3.080 (0.1213) | 3.100 (0.1220) | 3.120 (0.1228) | 3.140 (0.1236) | 3.150 (0.1240) | 3.160 (0.1244) | 3.180 (0.1252) | 3.200 (0.1260) | 3.220 (0.1268) | 3.240 (0.1276) | 3.250 (0.1280) | 3.260 (0.1283) | 3.280 (0.1291) | 3.300 (0.1299) |
|---|---|---

Adjusting Shim Selection Chart (Exhaust)

| Measured clearance mm (in.) \ Installed shim thickness mm (in.) | 2.500 (0.0984) | 2.520 (0.0992) | 2.540 (0.1000) | 2.550 (0.1004) | 2.560 (0.1008) | 2.580 (0.1016) | 2.600 (0.1024) | 2.620 (0.1031) | 2.640 (0.1039) | 2.650 (0.1043) | 2.660 (0.1047) | 2.670 (0.1051) | 2.680 (0.1055) | 2.690 (0.1059) | 2.700 (0.1063) | 2.710 (0.1067) | 2.720 (0.1071) | 2.730 (0.1075) | 2.740 (0.1079) | 2.750 (0.1083) | 2.760 (0.1087) | 2.770 (0.1091) | 2.780 (0.1094) | 2.790 (0.1098) | 2.800 (0.1102) | 2.810 (0.1106) | 2.820 (0.1110) | 2.830 (0.1114) | 2.840 (0.1118) | 2.850 (0.1122) | 2.860 (0.1126) | 2.870 (0.1130) | 2.880 (0.1134) | 2.890 (0.1138) | 2.900 (0.1142) | 2.910 (0.1146) | 2.920 (0.1150) | 2.930 (0.1154) | 2.940 (0.1157) | 2.950 (0.1161) | 2.960 (0.1165) | 2.970 (0.1169) | 2.980 (0.1173) | 2.990 (0.1177) | 3.000 (0.1181) | 3.010 (0.1185) | 3.020 (0.1189) | 3.030 (0.1193) | 3.040 (0.1197) | 3.050 (0.1201) | 3.060 (0.1205) | 3.080 (0.1213) | 3.100 (0.1220) | 3.120 (0.1228) | 3.140 (0.1236) | 3.150 (0.1240) | 3.160 (0.1244) | 3.180 (0.1252) | 3.200 (0.1260) | 3.220 (0.1268) | 3.240 (0.1276) | 3.250 (0.1280) | 3.260 (0.1283) | 3.280 (0.1291) | 3.300 (0.1299) |
|---|---|---

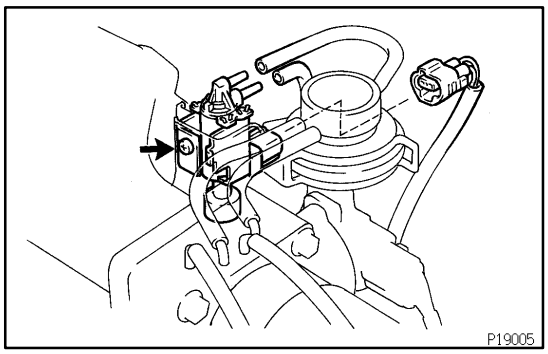

VSV FOR EXHAUST GAS RECIRCULATION (EGR)

SF1C4-02

INSPECTION

1. REMOVE VSV

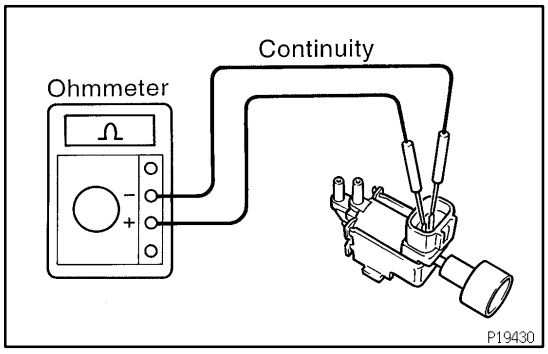

2. INSPECT VSV

(a) Inspect VSV for open circuit.

Using an ohmmeter, measure the resistance between the terminals.

Resistance:

37 - 44 Ω at 20 °C (68 °F)

If resistance is not as specified, replace the VSV.

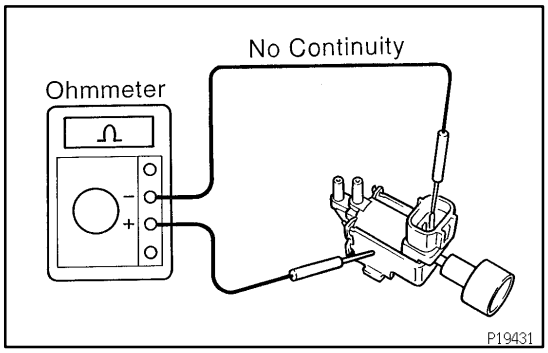

(b) Inspect VSV for ground.

Using an ohmmeter, check that there is no continuity between each terminal and the body.

If there is continuity, replace the VSV.

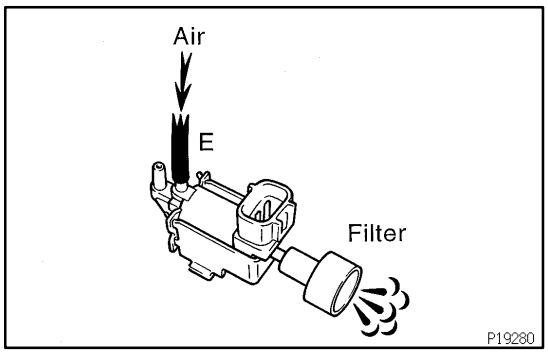

(c) Inspect VSV operation.

(1) Check that the air flows from port E to the filter.

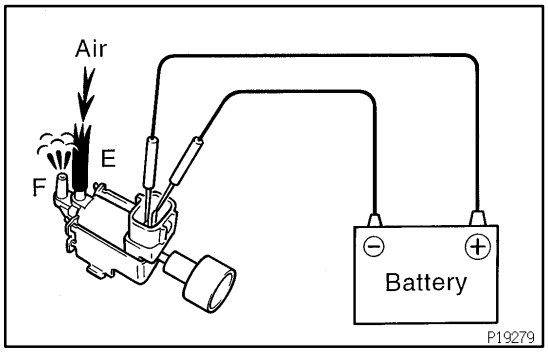

(2) Apply battery voltage across the terminals.

(3) Check that air does not flow from port E to the filter.

If operation is not as specified, replace the VSV.

3. REINSTALL VSV

CO0Z7-01

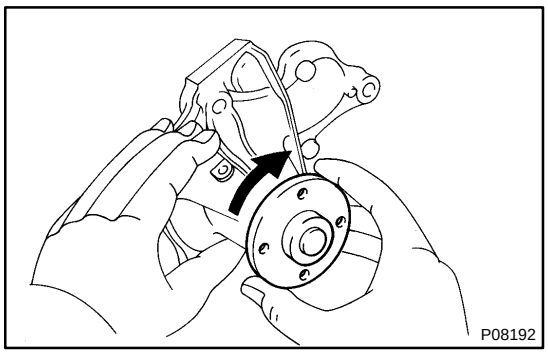

INSPECTION

INSPECT WATER PUMP

(a) Visually check the air hole and water hole for coolant leakage.

If leakage is found, replace the water pump.

(b) Turn the pulley and check that the water pump bearing moves smoothly and quietly.

If necessary, replace the watre pump.

AX0QI-02

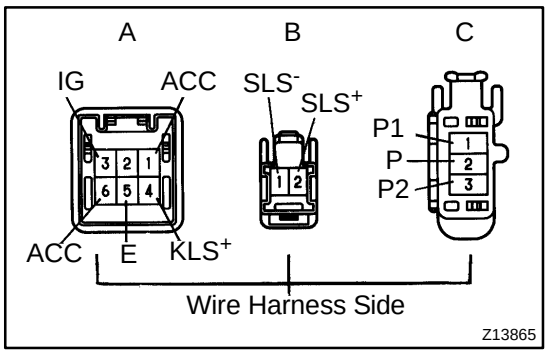

INSPECTION

1. INSPECT SHIFT LOCK CONTROL ECU

Using a voltmeter, measure the voltage at each terminals.

HINT:

Do not disconnect the ECU connector.

Terminal	Measuring Condition	Voltage (V)
A, 1 - A, 5 (ACC - E)	IG SW ACC	10 - 14
A, 3 - A, 5 (IG - E)	IG SW ON	10 - 14
A, 6 - A, 5 (STP - E)	Depress brake pedal	10 - 14
A, 4 - A, 5 (KLS^+ - E)	(1) IG SW ACC and shift lever P position	0
	(2) IG SW ACC and shift lever R, N, D, 2, L position	10 - 14
	(3) (After approx. 1 second)	6 - 9
B, 2 - B, 1 (SLS^+ - SLS^-)	(1) IG SW ON and shift lever P position	0
	(2) Depress brake pedal	8.5 - 13.5
	(3) Shift lever R, N, D, 2, L position	0
C, 1 - C, 2 (P1 - P)	(1) IG SW ON and shift lever P position and depress brake pedal	0
	(2) Shift lever R, N, D, 2, L position	9 - 13.5
C, 3 - C, 2 (P2 - P)	(1) IG SW ACC and shift lever P position	9 - 13.5
	(2) Shift lever R, N, D, 2, L position	0

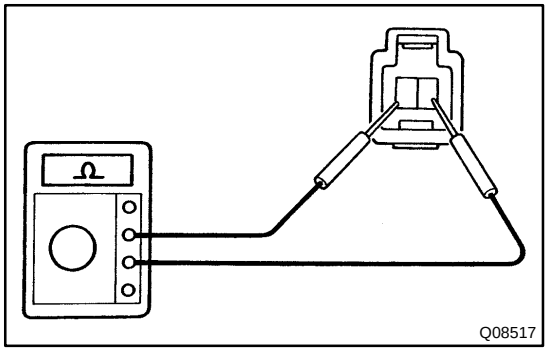

2. INSPECT SHIFT LOCK SOLENOID

(a) Disconnect the solenoid connector.

(b) Using an ohmmeter, measure the resistance between the terminals.

Standard resistance: 21 - 27 Ω

If the resistance value is not as specified, replace the solenoid.

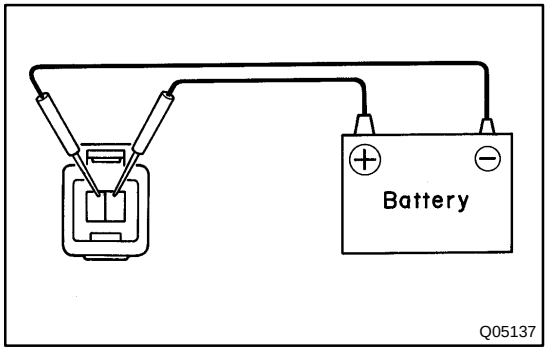

(c) Supply the battery positive voltage between terminals. Check that the solenoid operation sound is heard.

If the operation is not as specified, replace the solenoid.

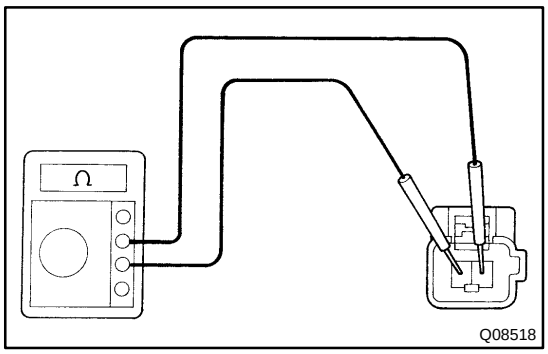

3. INSPECT KEY INTERLOCK SOLENOID

(a) Disconnect the solenoid connector.

(b) Using an ohmmeter, measure the resistance between the terminals.

Standard resistance: 12.5 - 16.5 Ω

If resistance value is not as specified, replace the solenoid.

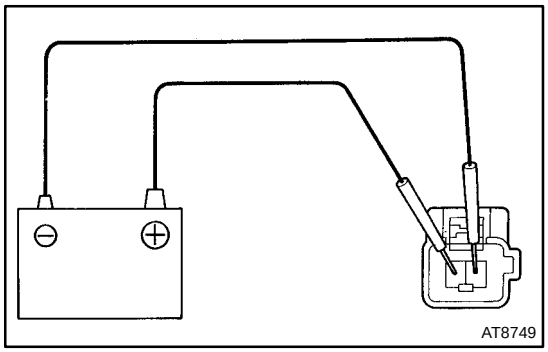

(c) Apply the battery positive voltage between the terminals. Check that an operation noise can be heard from the solenoid.

If the solenoid does not operated, replace the solenoid.

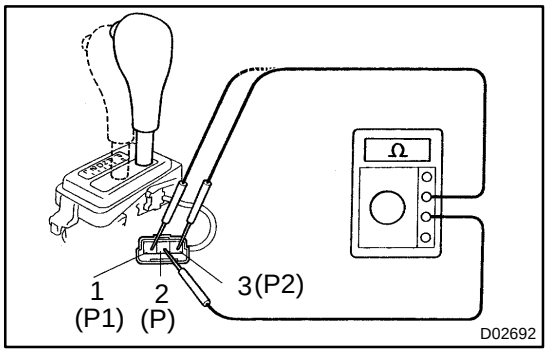

4. INSPECT SHIFT LOCK CONTROL SWITCH

Inspect that continuity exists between each terminal.

Shift position	Tester connection	Specified value
P position (Release buttom is not pushed)	2 - 1 (P - P1)	Continuity
P position (Release buttom is pushed)	2 - 1 (P - P1) 2 - 3 (P - P2)	Continuity
R, N, D, 2, L position	2 - 3 (P - P2)	Continuity

If the continuity is not as specified, replace the switch.

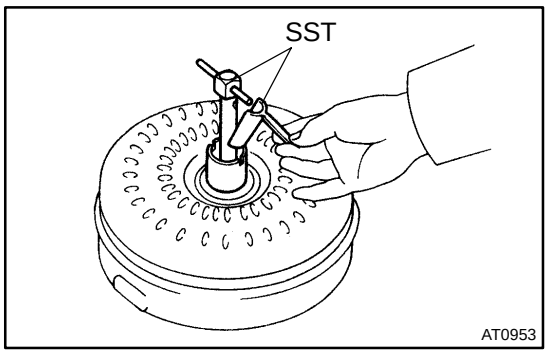

TORQUE CONVERTER CLUTCH AND DRIVE PLATE

AX03J-04

INSPECTION

1. INSPECT ONE-WAY CLUTCH

(a) Install SST into the inner race of the one-way clutch.
SST 09350-32014 (09351-32010)

(b) Install SST so that it fits in the notch of the converter hub and outer race of the one-way clutch.
SST 09350-32014 (09351-32020)

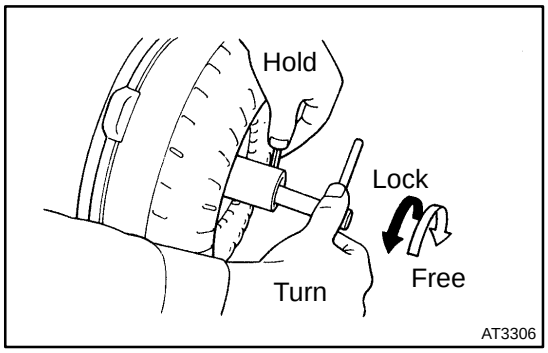

(c) With the torque converter clutch standing on its side,check the clutch locks when turned counterclockwise, and rotates freely and smoothly clockwise.

If necessary, clean the converter and retest the clutch. Replace the converter clutch if the clutch still fails the test.

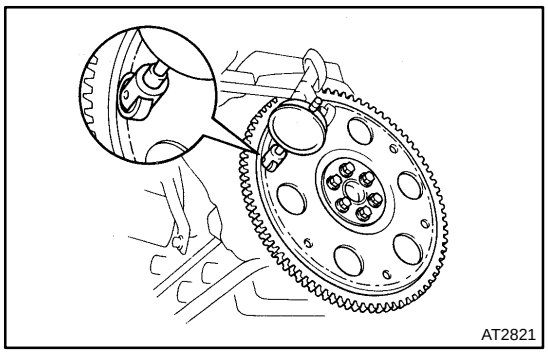

2. MEASURE DRIVE PLATE RUNOUT AND INSPECT RING GEAR

Set up a dial indicator and measure the drive plate runout.

Maximum runout: 0.20 mm (0.0079 in.)

If the runout is not within the specification or if the ring gear is damaged, replace the drive plate. If installing a new drive plate, note the orientation of spacers and tighten the bolts.

Torque: 83 N·m (850 kgf·cm, 61 ft·lbf)

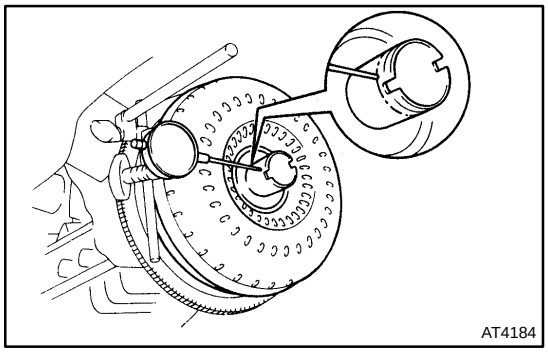

3. MEASURE TORQUE CONVERTER CLUTCH SLEEVE RUNOUT

Temporarily mount the torque converter clutch to the drive plate.

Set up a dial indicator and measure the torque converter clutch sleeve runout.

Maximum runout: 0.30 mm (0.0118 in.)

If the runout is not within the specification, try to correct by reorienting the installation of the torque converter clutch. If excessive runout cannot be corrected, replace the torque converter clutch.

HINT:

Mark the position of the torque converter clutch to ensure the correct installation.

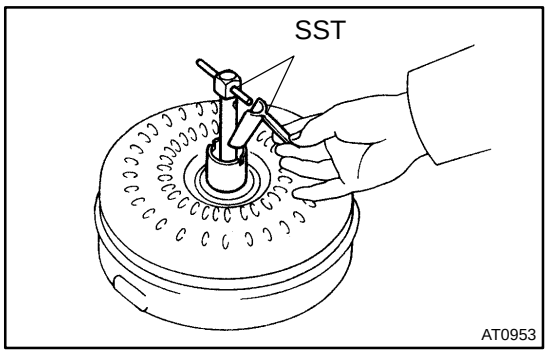

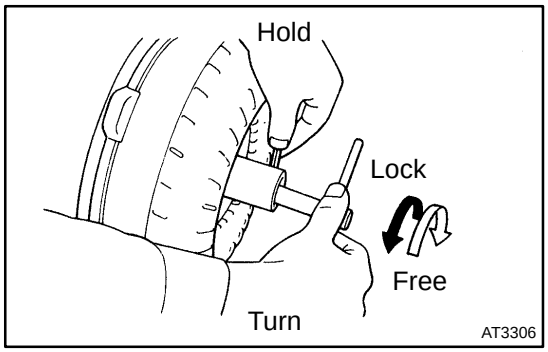

TORQUE CONVERTER CLUTCH AND DRIVE PLATE

AX0RF-01

INSPECTION

1. INSPECT ONE-WAY CLUTCH

(a) Install SST into the inner race of the one-way clutch.
SST 09350-32014 (09351-32010)

(b) Install SST so that it fits in the notch of the converter hub and outer race of the one-way clutch.
SST 09350-32014 (09351-32020)

(c) With the torque converter clutch standing on its side, check that the clutch locks when turned counterclockwise, and rotates freely and smoothly clockwise.

If necessary, clean the converter and retest the clutch.
Replace the converter if the clutch still fails the test.

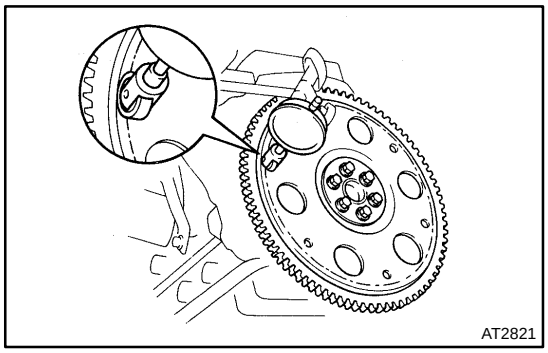

2. MEASURE DRIVE PLATE RUNOUT AND INSPECT RING GEAR

(a) Set up a dial indicator and measure the drive plate runout.

(b) Check the damage of the ring gear.

Maximum runout: 0.20 mm (0.0079 in.)

If the runout is not within the specification and measure the torque converter clutch sleeve runout, replace the drive plate.

Torque: 64 N·m (650 kgf·cm, 47 ft·lbf)

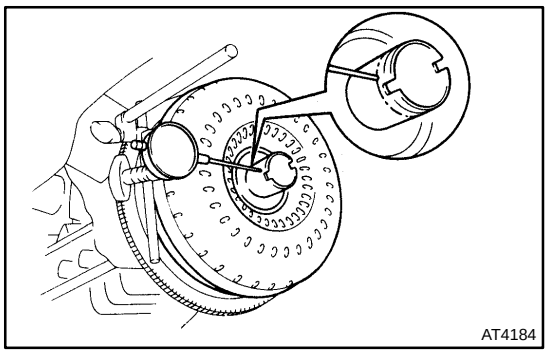

3. MEASURE TORQUE CONVERTER CLUTCH SLEEVE RUNOUT

Temporarily mount the torque converter clutch to the drive plate. Set up a dial indicator.

Maximum runout: 0.30 mm (0.0118 in.)

If the runout is not within the specification, try to correct by reorienting the installation of the converter.

HINT:

Mark the position of the torque converter clutch to ensure correct installation.

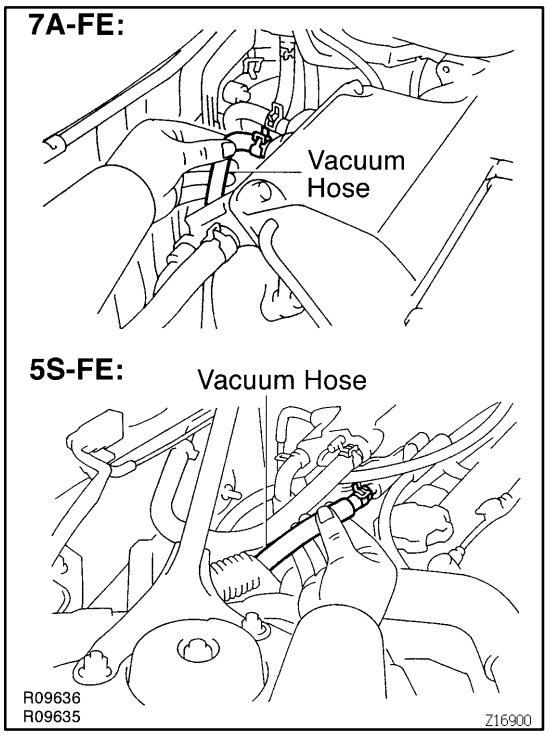

AIR CONTROL VALVE

SR01X-07

INSPECTION

1. TURN AIR CONDITIONING SWITCH OFF

2. CHECK IDLE-UP

(a) Start the engine and run it at idle.

(b) Fully turn the steering wheel.

(c) Check that the engine rpm decreases when the vacuum hose of the air control valve is pinched.

(d) Check that the engine rpm increases when the hose is released.

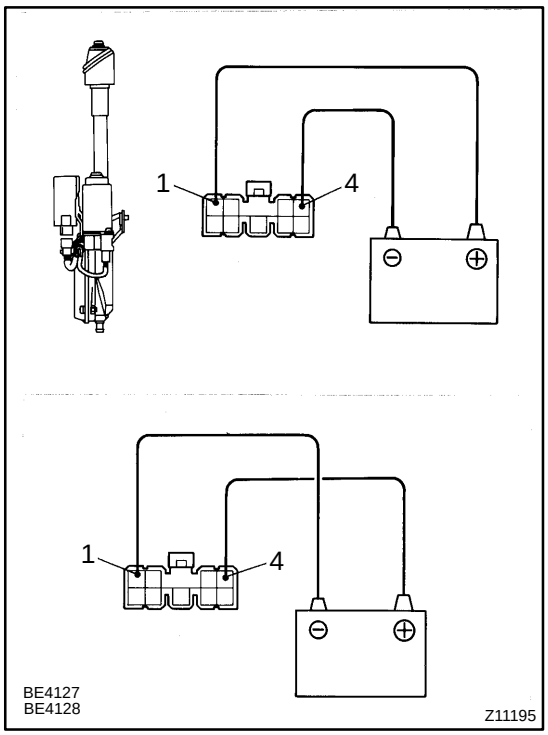

ANTENNA

INSPECTION

BE0PR-01

1. INSPECT ANTENNA MOTOR OPERATION

(a) Connect the positive (+) lead from battery to terminal 1 and the negative (-) lead to terminal 4.

(b) Check that the motor turns (The antenna moves upward).

NOTICE:

These tests must be done quickly (within 3 - 5 seconds) to prevent the coil from burning out.

(c) Then, reverse the polarity, check that the motor turns the opposite way (The antenna moves downward).

NOTICE:

These tests must be done quickly (within 3 - 5 seconds) to prevent the coil from burning out.

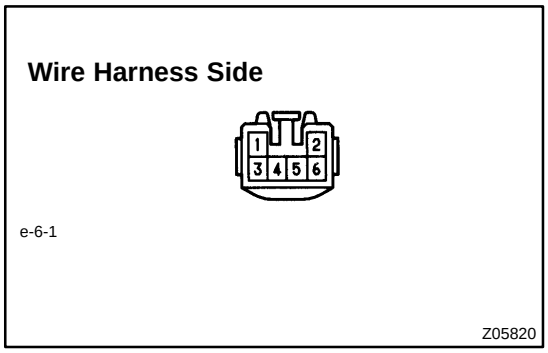

2. INSPECT MOTOR ANTENNA CIRCUIT

Disconnect the motor antenna connector from the body wire harness and inspect the connector on body wire harness side, as shown.

Tester connection	Condition	Specified condition
1 - Ground	Constant	Continuity
2 - Ground	Constant	Battery positive voltage
4 - Ground	Ignition switch ACC or ON and radio switch ON AM or FM (87.9 - 96.0 MHz)	Battery positive voltage
4 - Ground	Ignition switch ACC or ON and radio switch ON except for AM or FM	No voltage
5 - Ground	Ignition switch position ON	Battery positive voltage
5 - Ground	Ignition switch position ACC or LOCK	No voltage
6 - Ground	Ignition switch position ACC or ON	Battery positive voltage
6 - Ground	Ignition switch position LOCK	No voltage

If the circuit is not as specified, inspect radio or wire harness.
If the circuit is as specified, replace motor antenna.

3. INSPECT GLASS PRINTED ANTENNA

(Use same procedure as for ”INSPECT DEFOGGER WIRES” on page BE-48 .)

4. REPAIR GLASS PRINTED ANTENNA

(Use same procedure as for ”REPAIR DEFOGGER WIRES” on page BE-48 .)

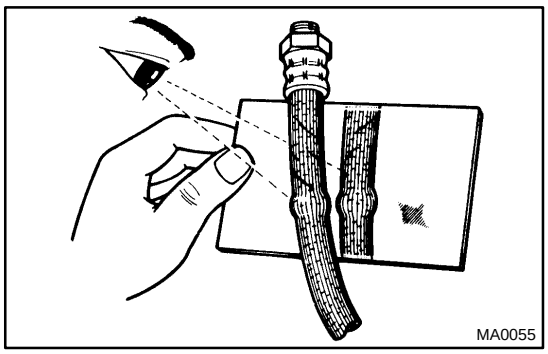

BRAKE

MA00M-08

INSPECTION

1. INSPECT BRAKE LINE PIPES AND HOSES

HINT:

Check in a well lighted area. Check the entire circumference and length of the brake hoses using a mirror as required. Turn the front wheels fully right or left before checking the front brake.

(a) Check all brake lines and hoses for:
- Damage
- Wear
- Deformation
- Cracks
- Corrosion
- Leaks
- Bends
- Twists

(b) Check all clamps for tightness and connections for leakage.

(c) Check that the hoses and lines are clear of sharp edges, moving parts and the exhaust system.

(d) Check that the lines installed in grommets pass through the center of the grommets.

2. INSPECT FRONT BRAKE PADS AND DISCS
(See page BR-19)

3. Drum Brake:
INSPECT BRAKE LININGS AND DRUMS
(See page BR-31)

4. Disc Brake:
INSPECT REAR BRAKE PADS
(See page BR-35)

5. Disc Brake:
INSPECT PARKING BRAKE LININGS AND DISCS
(See page BR-45)

MX0BO-01

INSPECTION

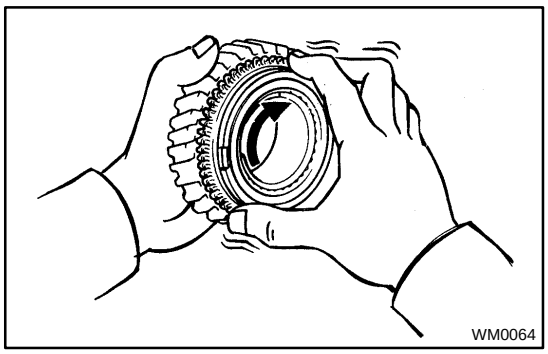

1. INSPECT SYNCHRONIZER RING

(a) Check for wear or damage.

(b) Check the braking effect of the synchronizer ring.
Turn the synchronizer ring in one direction while pushing it to the gear cone. Check that the ring locks.

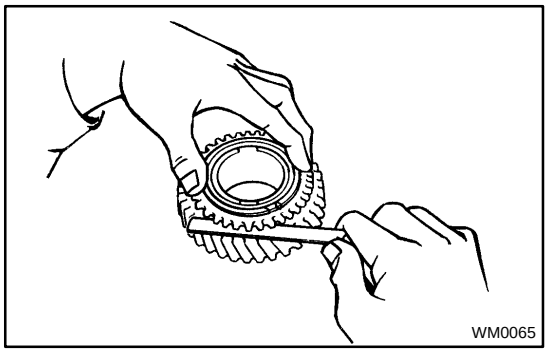

If the braking effect is insufficient, apply a small amount of fine lapping compound between the synchronizer ring and gear cone. Lightly rub the synchronizer ring and gear cone together.

NOTICE:

Ensure the fine lapping compound is completely washed off after rubbing.

(c) Check again the braking effect of the synchronizer ring.

(d) Using a feeler gauge, measure the clearance between the synchronizer ring back and gear spline end.
Minimum clearance: 0.6 mm (0.024 in.)

If the clearance is less than the minimum, replace the synchronizer ring and gear cone by applying a small amount of fine lapping compound.

NOTICE:

Ensure the fine lapping compound is completely washed off after rubbing.

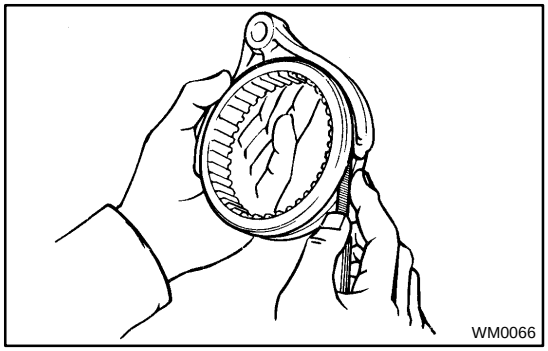

2. INSPECT SHIFT FORK AND HUB SLEEVE CLEARANCE

Using a feeler gauge, measure the clearance between the hub sleeve and shift fork.

Maximum clearance: 1.0 mm (0.039 in.)

If the clearance exceeds the maximum, replace the shift fork or hub sleeve.

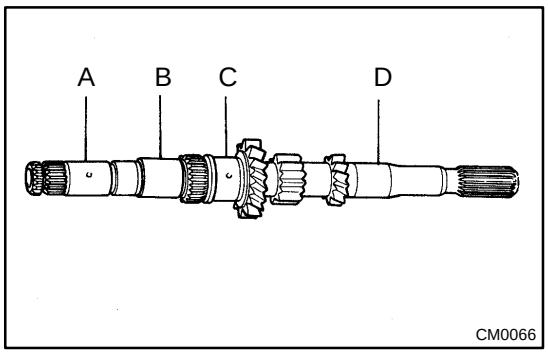

3. INSPECT INPUT SHAFT

(a) Check the input shaft for wear or damage.

(b) Using a micrometer, measure the outer diameter of the input shaft journal surface.

Minimum outer diameter:
Part A: 24.870 mm (0.9791 in.)
Part B: 28.970 mm (1.1405 in.)
Part C: 30.970 mm (1.2193 in.)
Part D: 24.970 mm (0.9831 in.)

If the outer diameter is less than the minimum, replace the input shaft.

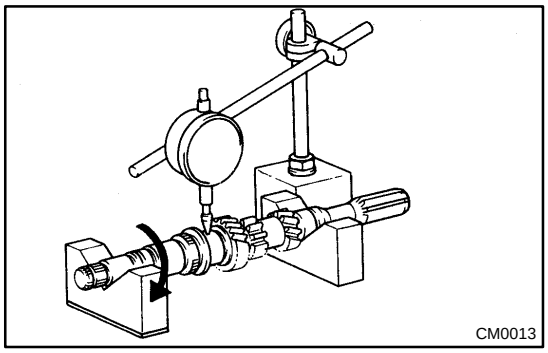

(c) Using a dial indicator, check the shaft runout.

Maximum runout: 0.05 mm (0.0020 in.)

If the runout exceeds the maximum, replace the input shaft.

MX0BK-01

INSPECTION

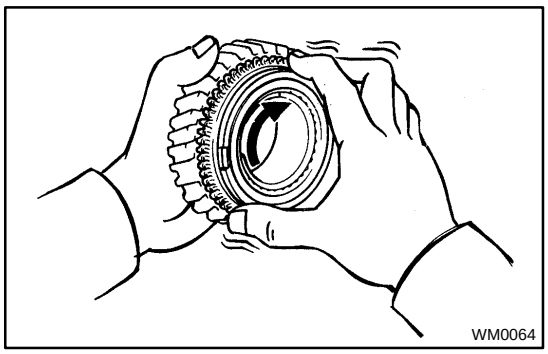

1. INSPECT 5TH GEAR SYNCHRONIZER RING

(a) Check for wear or damage.

(b) Check the braking effect of the synchronizer ring.
Turn the synchronizer ring in one direction while pushing it to the gear cone. Check that the ring locks.

If the braking effect is insufficient, apply a small amount of fine lapping compound between the synchronizer ring and gear cone. Lightly rub the synchronizer ring and gear cone together.

NOTICE:

Ensure the fine lapping compound is completely washed off after rubbing.

(c) Check again the braking effect of the synchronizer ring.

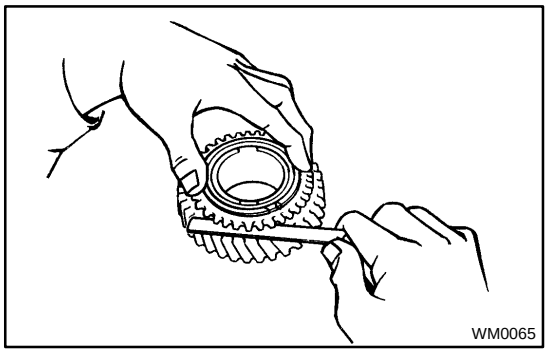

(d) Using a feeler gauge, measure the clearance between the synchronizer ring back and gear spline end.
Minimum clearance: 0.6 mm (0.024 in.)

If the clearance is less than the minimum, replace the synchronizer ring and gear cone by applying a small amount of fine lapping compound.

NOTICE:

Ensure the fine lapping compound is completely washed off after rubbing.

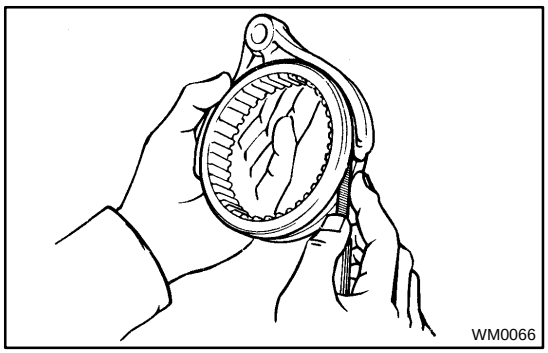

2. INSPECT SHIFT FORK AND HUB SLEEVE CLEARANCE

Using a feeler gauge, measure the clearance between the hub sleeve and shift fork.

Maximum clearance: 1.0 mm (0.039 in.)

If the clearance exceeds the maximum, replace the shift fork or hub sleeve.

3. REMOVE TRANSAXLE CASE RECEIVER

Remove the bolt and transaxle case receiver.

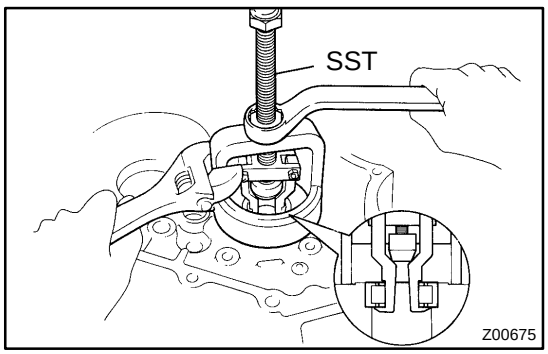

4. IF NECESSARY, REPLACE INPUT SHAFT FRONT BEARING

(a) Using SST, pull out the bearing.
SST 09612-65014

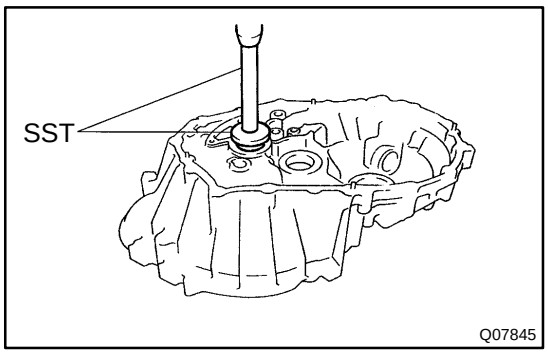

(b) Using SST and a press, install a new bearing.
SST 09950-60010 (09951-00460),
09950-70010 (09951-07150)

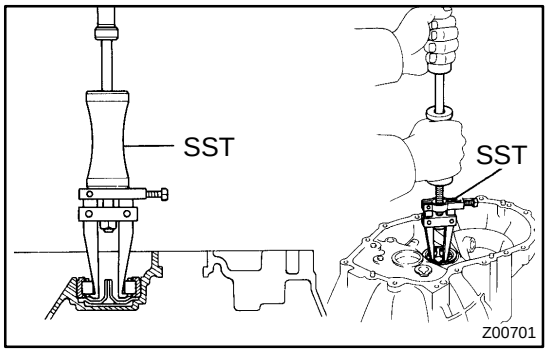

5. IF NECESSARY, REPLACE OUTPUT SHAFT FRONT BEARING

(a) Remove the bolt and bearing lock plate.
(b) Using SST, pull out the bearing.
SST 09308-00010
(c) Remove the output shaft front cover.

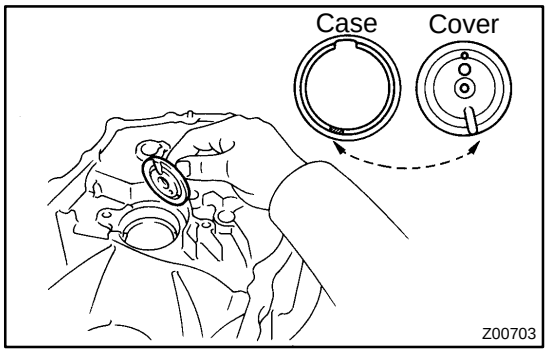

(d) Install the output shaft front cover.
HINT:
Install the output shaft front cover projection into the case side hollow.

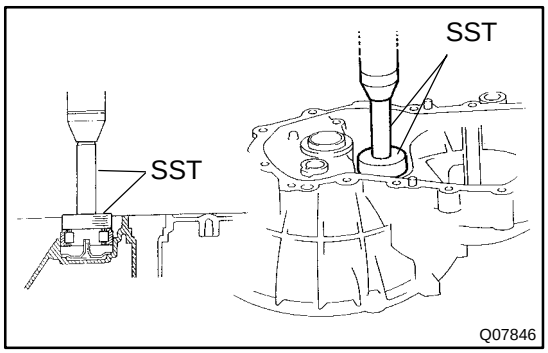

(e) Using SST and a press, install a new bearing.
SST 09950-60010 (09951-00620),
09950-70010 (09951-07150)
(f) Install the bearing lock plate and torque the bolt.
Torque: 11 N·m (115 kgf·cm, 8 ft·lbf)

6. INSTALL TRANSAXLE CASE RECEIVER

Install the transaxle case receiver and torque the bolt.
Torque: 11 N·m (115 kgf·cm, 8 ft·lbf)

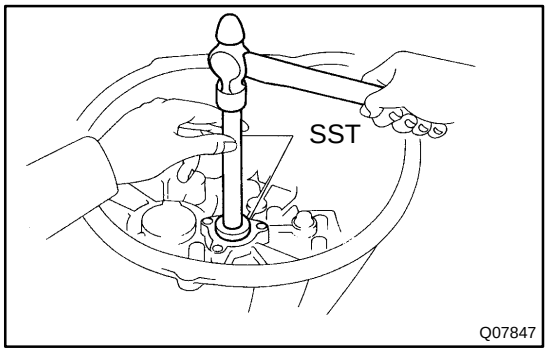

7. IF NECESSARY, REPLACE INPUT SHAFT FRONT OIL SEAL

(a) Using a screwdriver, pry out the oil seal.
(b) Using SST, drive in a new oil seal until its surface is flush with the transaxle case.
SST 09950-60010 (09951-00400),
09950-70010 (09951-07150)
(c) Coat the lip of the oil seal with MP grease.

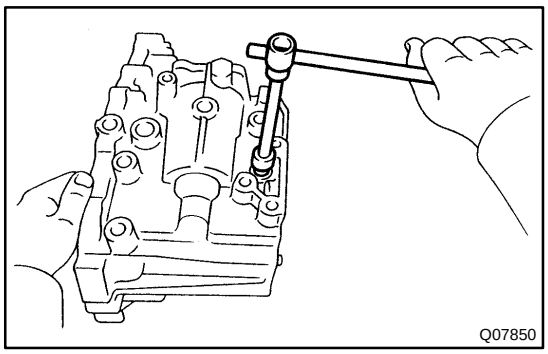

8. IF NECESSARY, REPLACE REVERSE RESTRICT PIN

(a) Using a hexagon wrench, remove the straight screw plug.

(b) Using a pin punch and hammer, drive out the slotted spring pin.

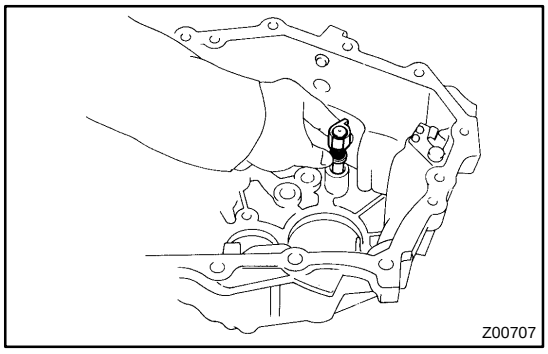

(c) Replace the reverse restrict pin.

(d) Using a pin punch and hammer, drive in the slotted spring pin.

(e) Apply sealant to the screw plug threads.
Sealant: Part No. 08833-00080, THREE BOND 1344, LOCTITE 242 or equivalent

(f) Using a hexagon wrench, install the straight screw plug.
Torque: 13 N·m (130 kgf·cm, 9 ft·lbf)

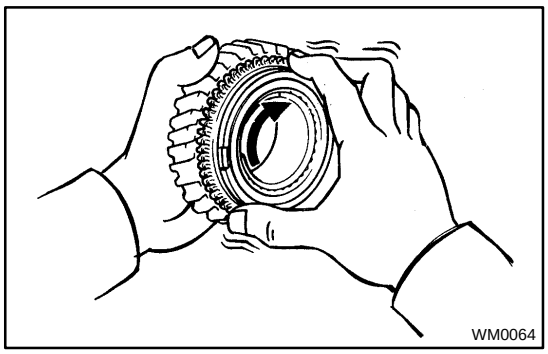
WM0064

INSPECTION

1. INSPECT SYNCHRONIZER RING

(a) Check for wear or damage.

(b) Check the braking effect of the synchronizer ring.

Turn the synchronizer ring in one direction while pushing it to the gear cone. Check that the ring locks.

If the braking effect is insufficient, apply a small amount of fine lapping compound between the synchronizer ring and gear cone. Lightly rub the synchronizer ring and gear cone together.

NOTICE:

Ensure the fine lapping compound is completely washed off after rubbing.

(c) Check again the braking effect of the synchronizer ring.

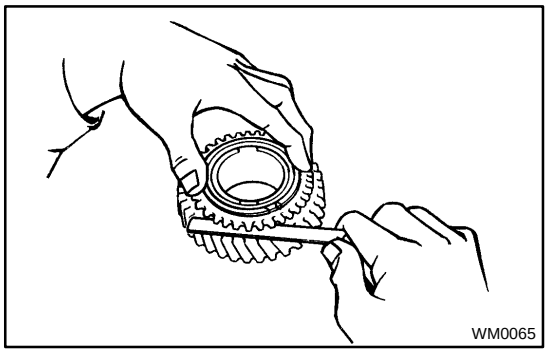
WM0065

MX0BS-01

(d) Using a feeler gauge, measure the clearance between the synchronizer ring back and gear spline end.

Minimum clearance: 0.6 mm (0.024 in.)

If the clearance is less than the minimum, replace the synchronizer ring and gear cone by applying a small amount of fine lapping compound.

NOTICE:

Ensure the fine lapping compound is completely washed off after rubbing.

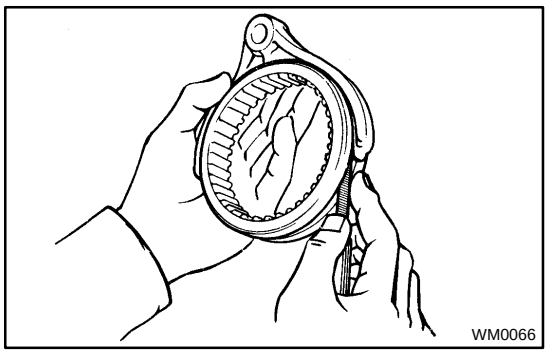
WM0066

2. INSPECT SHIFT FORK AND HUB SLEEVE CLEARANCE

Using a feeler gauge, measure the clearance between the hub sleeve and shift fork.

Maximum clearance: 1.0 mm (0.039 in.)

If the clearance exceeds the maximum, replace the shift fork or hub sleeve.

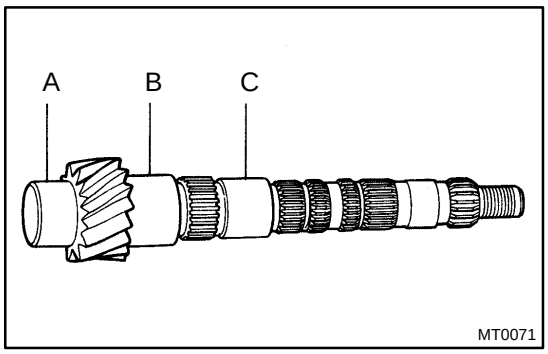

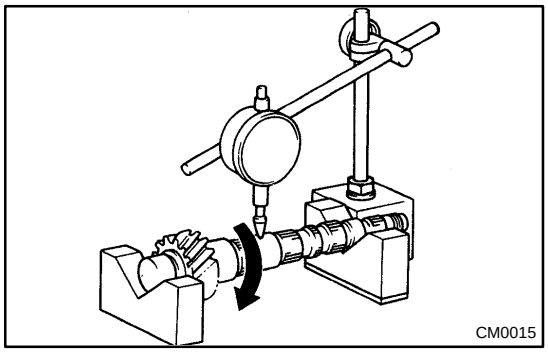

3. INSPECT OUTPUT SHAFT

(a) Check the output shaft for wear or damage.

(b) Using a micrometer, measure the outer diameter of the output shaft journal surface.

Minimum outer diameter:
Part A: 32.970 mm (1.2980 in.)
Part B: 37.970 mm (1.4949 in.)
Part C: 31.970 mm (1.2587 in.)

If the outer diameter is less than the minimum, replace the output shaft.

(c) Using a dial indicator, check the shaft runout.

Maximum runout: 0.05 mm (0.0020 in.)

If the runout exceeds the maximum, replace the output shaft.

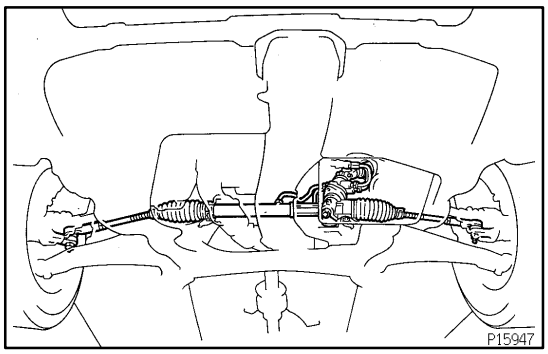

CHASSIS

MA051-01

INSPECTION

1. INSPECT STEERING LINKAGE

(a) Check the steering wheel freeplay (See page SR-9).

(b) Check the steering linkage for looseness or damage.

Check that:

- Tie rod ends do not have excessive play.
- Dust seals and boots are not damaged.
- Boot clamps are not loose.

2. INSPECT SRS AIRBAG (See page RS-2)

3. INSPECT STEERING GEAR HOUSING OIL

Check the steering gear housing for oil leakage.

4. INSPECT DRIVE SHAFT BOOTS

Check the drive shaft boots for clamp looseness, grease leakage, or damage.

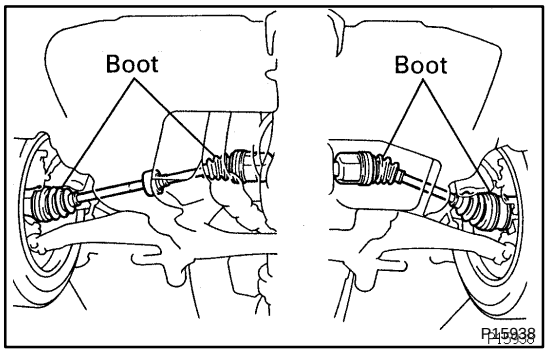

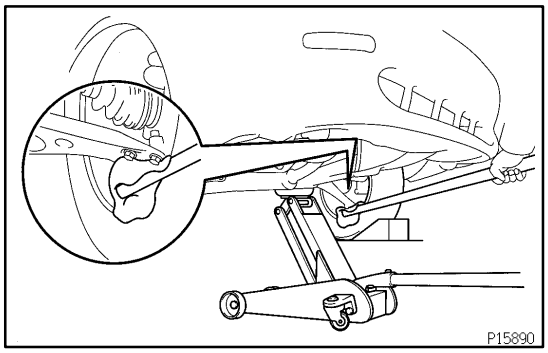

5. INSPECT BALL JOINT AND DUST COVERS

(a) Inspect the ball joints for excessive looseness.

- Jack up the front of the vehicle and place wooden blocks with a height of 180 - 200 mm (7.09 - 7.87 in.) under the front tires.
- Lower the jack until there is about half a load on the front coil spring. Place stands under the vehicle for safety.
- Check that the front wheels are in a straight forward position, and block them with chocks.
- Using a lever, pry up the end of the lower arm, and check the amount of play.

Maximum ball joint vertical play:
0 mm (0 in.)

If there is play, replace the ball joint.

(b) Check the dust cover for damage.

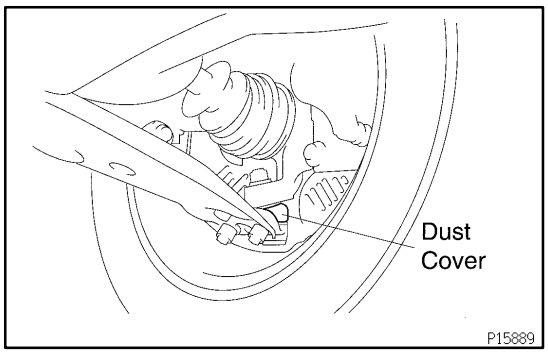

6. CHECK TRANSAXLE OIL (FLUID)

Visually check the transaxle for oil (fluid) leakage.

If leakage is found, check for the cause and repair.

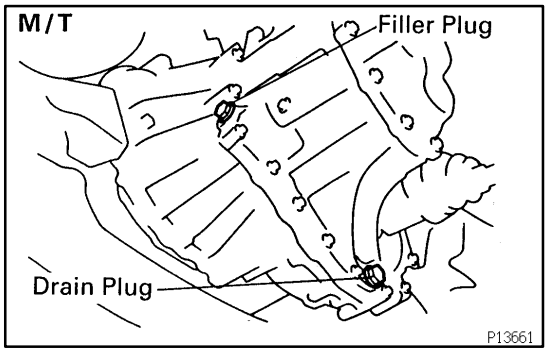

7. REPLACE TRANSAXLE FLUID

(a) M/T:

Replace transaxle oil.

(C52: See page MX-4)

(S54: See page MX-4)

(b) A/T

Replace transaxle (transmission) fluid.

(A140E: See page DI-219)

(A246E: See page DI-262)

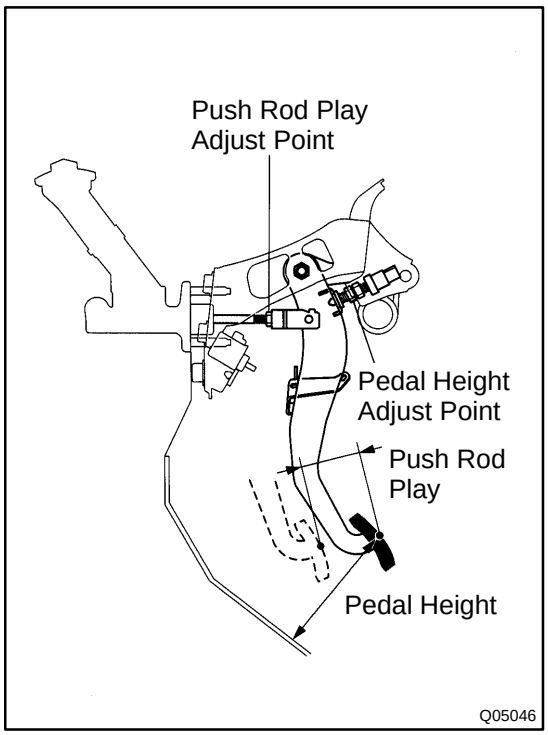

CLUTCH PEDAL

CL066-03

INSPECTION

1. CHECK PEDAL HEIGHT

Pedal height from asphalt sheet:
144.9 - 154.9 mm (5.705 - 6.098 in.)

2. IF NECESSARY, ADJUST PEDAL HEIGHT

Loosen the lock nut and turn the stopper bolt until the height is correct. Tighten the lock nut.

3. CHECK PEDAL FREEPLAY AND PUSH ROD PLAY

(a) Push in on pedal until the beginning of clutch resistance is felt.

Pedal freeplay:
1.0 - 5.0 mm (0.039 - 0.197 in.)

(b) Gently push on the pedal until the resistance begins to increase a little.

Push rod play at pedal top:
5.0 - 15.0 mm (0.197 - 0.591 in.)

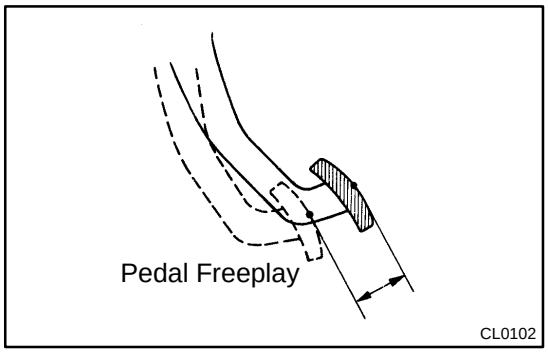

4. IF NECESSARY, ADJUST PEDAL FREEPLAY AND PUSH ROD PLAY

(a) Loosen the lock nut and turn the push rod until the freeplay and push rod play are correct.
(b) Tighten the lock nut.
(c) After adjusting the pedal freeplay, check the pedal height.
(d) Connect the air duct and install the lower finish panel.

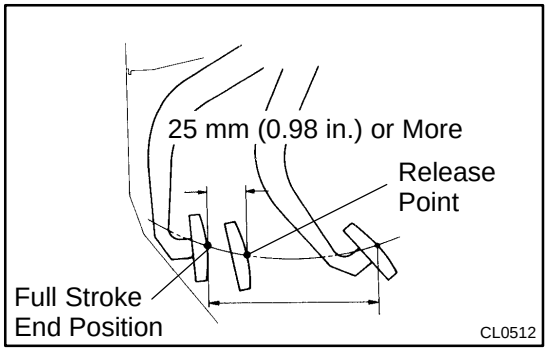

5. CHECK CLUTCH RELEASE POINT

(a) Pull the parking brake lever and install wheel stopper.
(b) Start the engine and idle the engine.
(c) Without depressing the clutch pedal, slowly shift the shift lever into reverse position until the gears contact.
(d) Gradually depress the clutch pedal and measure the stroke distance from the point the gear noise stops (release point) up to the full stroke end position.

Standard distance:
25 mm (0.98 in.) or more

If the distance is not as specified, do the following operation.

- Check pedal height.
- Check push rod play and pedal freeplay.
- Bleed the clutch line.
- Check the clutch cover and disc.

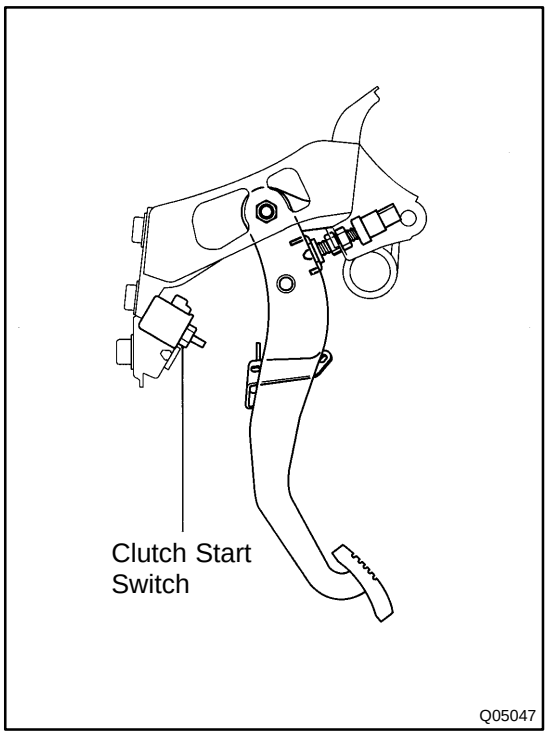

6. CHECK CLUTCH START SYSTEM

(a) Check that the engine does not start when the clutch pedal is released.

(b) Check that the engine starts when the clutch pedal is fully depressed.

If necessary, replace the clutch start switch.

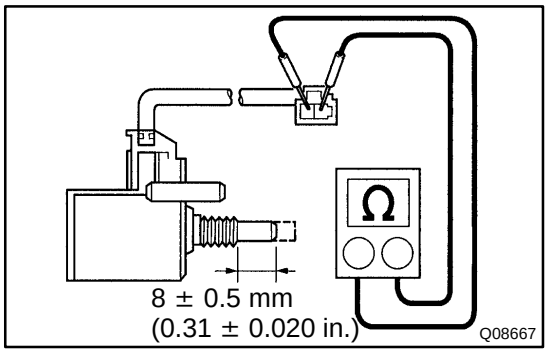

7. INSPECT CLUTCH START SWITCH CONTINUITY

Check the continuity between terminals when the switch is ON and OFF.

Switch position	Condition
ON (pushed)	Continuity
OFF (free)	No continuity

CLUTCH RELEASE CYLINDER

CL06C-04

COMPONENTS

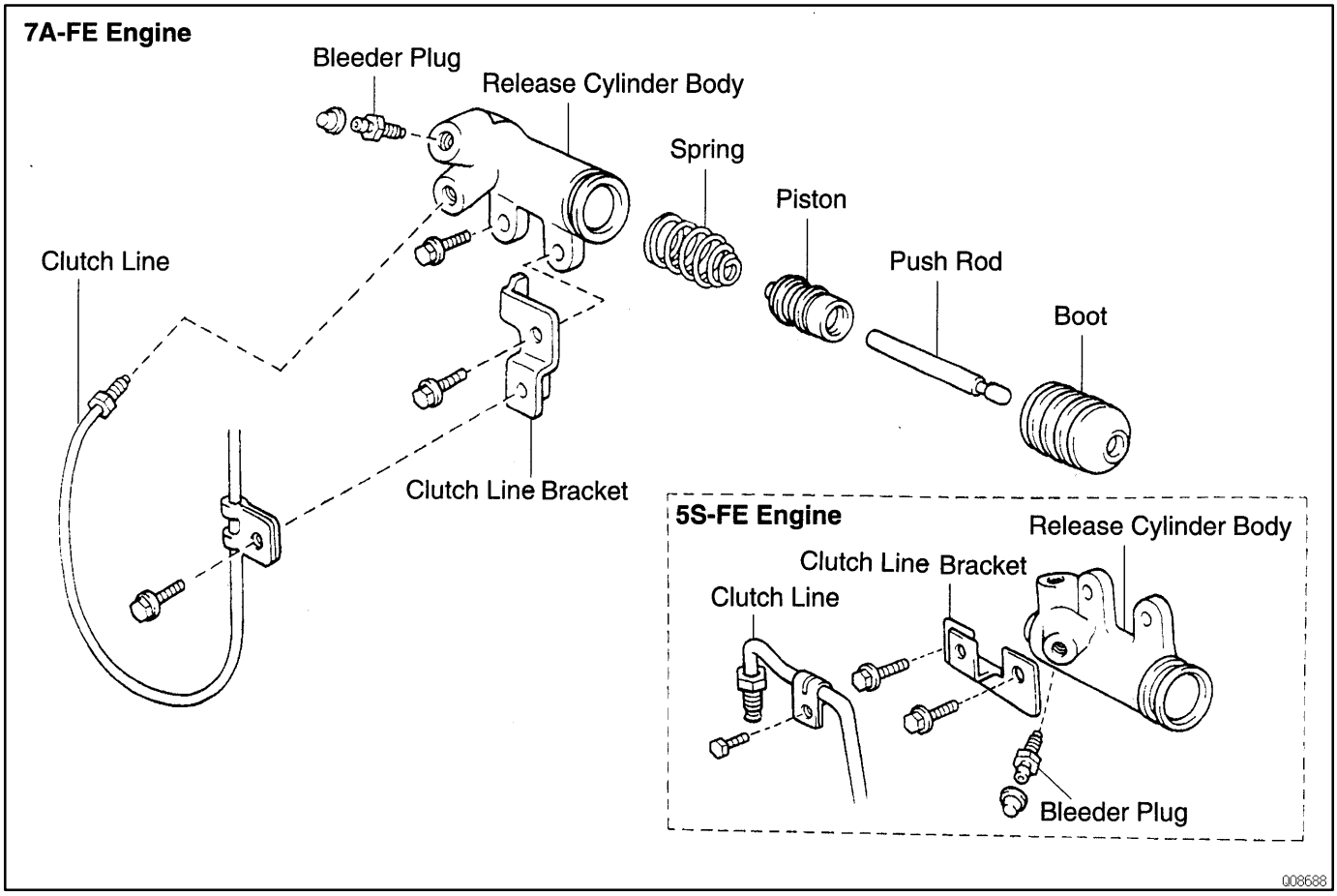

CL06J-04

INSPECTION

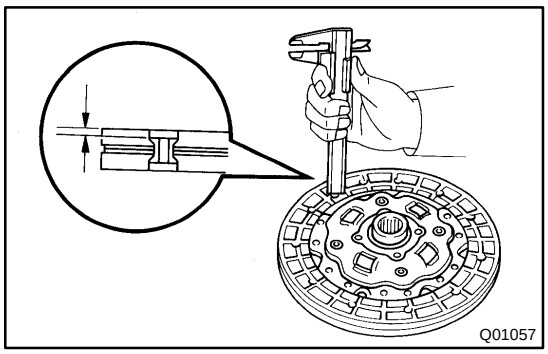

1. INSPECT CLUTCH DISC FOR WEAR OR DAMAGE

Using calipers, measure the rivet head depth.

Minimum rivet depth: 0.3 mm (0.012 in.)

If necessary, replace the clutch disc.

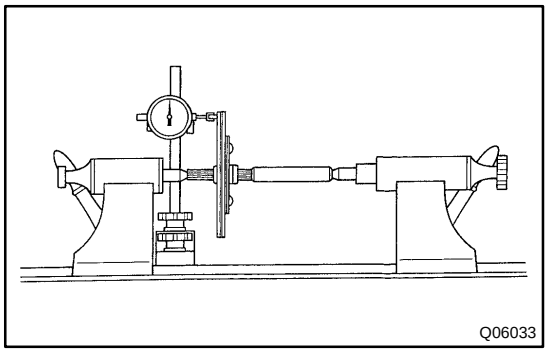

2. INSPECT CLUTCH DISC RUNOUT

Using a dial indicator, check the disc runout.

Maximum runout: 0.8 mm (0.031 in.)

If necessary, replace the clutch disc.

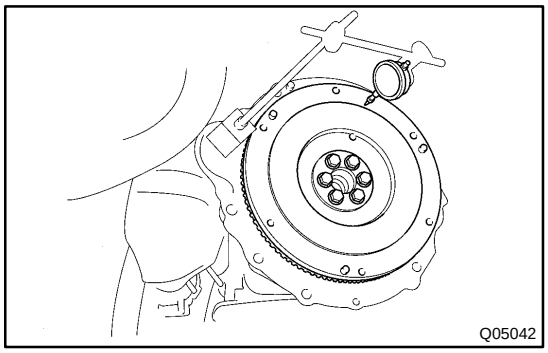

3. INSPECT FLYWHEEL RUNOUT

Using a dial indicator, check the flywheel runout.

Maximum runout: 0.1 mm (0.004 in.)

If necessary, replace the flywheel.

Torque:

7A-FE: 78 N·m (800 kgf·cm, 58 ft·lbf)

5S-FE: 88 N·m (900 kgf·cm, 65 ft·lbf)

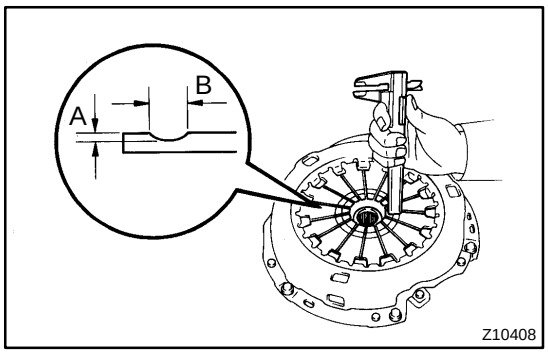

4. INSPECT DIAPHRAGM SPRING FOR WEAR

Using calipers, measure the diaphragm spring for depth and width of wear.

Maximum:

A (Depth): 0.5 mm (0.020 in.)

B (Width): 6.0 mm (0.236 in.)

If necessary, replace the clutch cover.

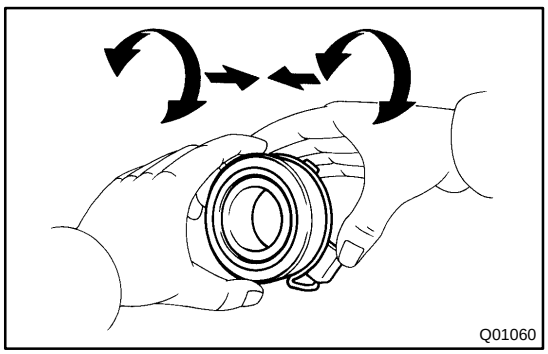

5. INSPECT RELEASE BEARING

Turn the bearing by hand while applying force in the axial direction.

HINT:

The bearing is permanently lubricated and requires no cleaning or lubrication.

If necessary, replace the release bearing.

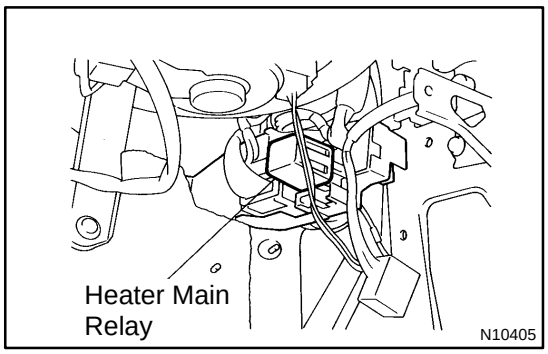

HEATER MAIN RELAY

AC1GX-01

INSPECTION

1. REMOVE HEATER MAIN RELAY FROM RELAY BLOCK NO.4

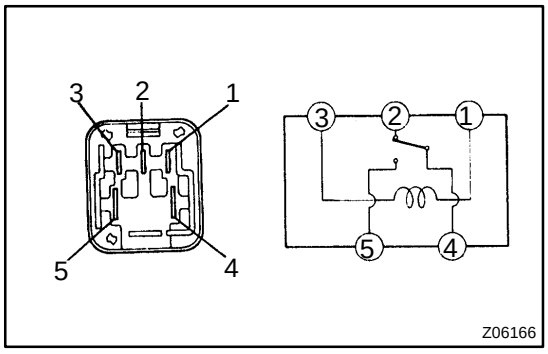

2. INSPECT HEATER MAIN RELAY CONTINUITY

Condition	Tester connection	Specified condition
Constant	1 - 3 2 - 4	Continuity
Apply B+ between terminals 1 and 3.	4 - 5	Continuity

If continuity is not as specified, replace the relay.

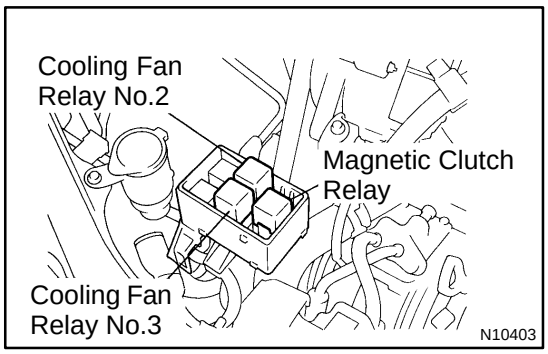

MAGNETIC CLUTCH RELAY

AC1GY-01

INSPECTION

1. REMOVE MAGNETIC CLUTCH RELAY FROM RELAY BLOCK NO.5

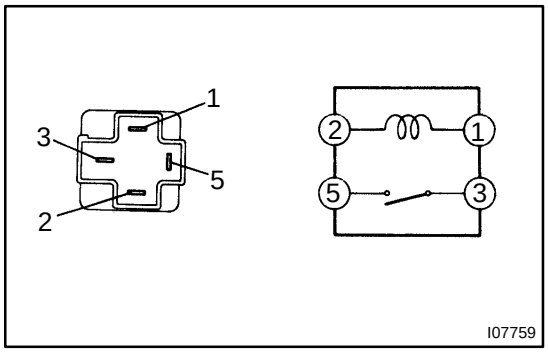

2. INSPECT MAGNETIC CLUTCH RELAY CONTINUITY

Condition	Tester connection	Specified condition
Constant	1 - 2	Continuity
Apply B+ between terminals 1 and 2.	3 - 5	Continuity

If continuity is not as specified, replace the relay.

POWER SOURCE

LOCATION

BE0OO-01

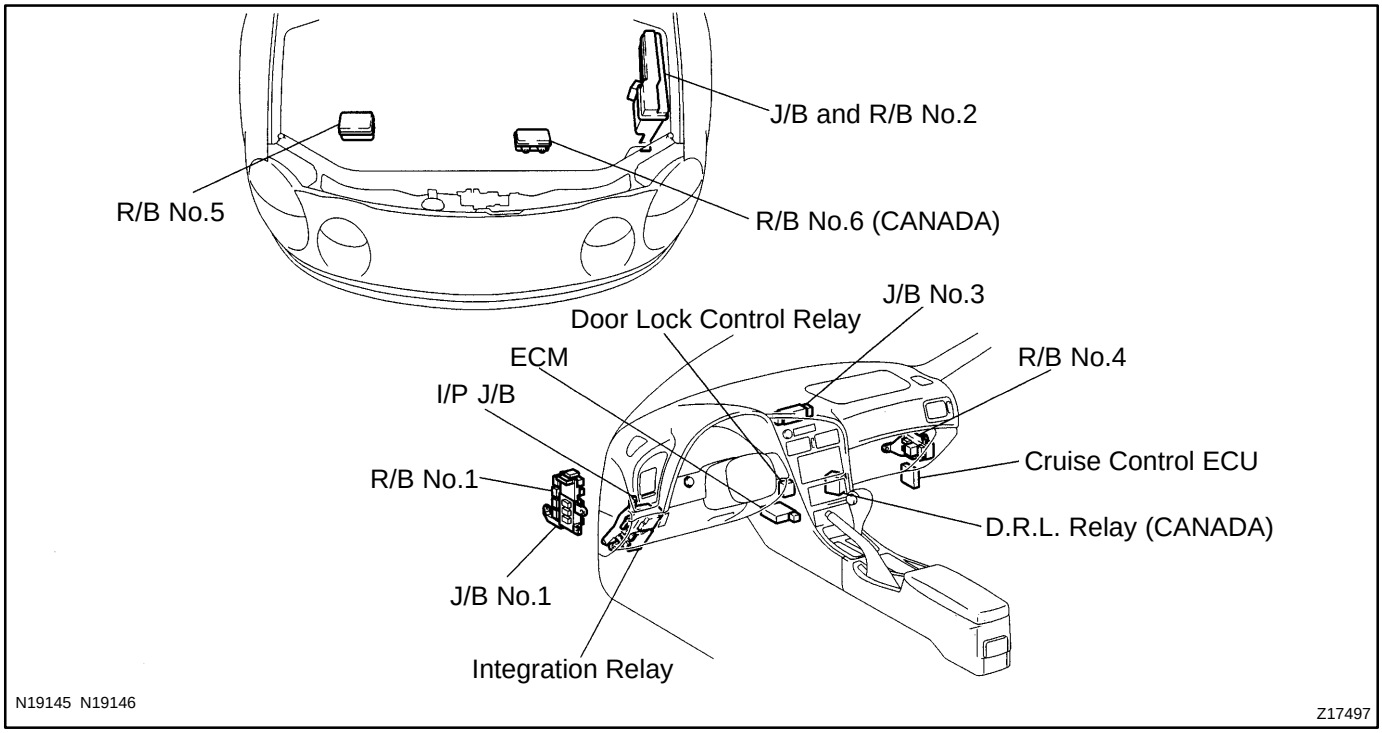

ENGINE

MA00R-22

INSPECTION

HINT:

Inspect these items when the engine is cold.

1. **REPLACE TIMING BELT**
   (7A-FE: See page EM-11)
   (5S-FE: See page EM-11)
2. **INSPECT DRIVE BELT**
   (7A-FE: See page CH-2)
   (5S-FE: See page CH-2)
3. **REPLACE SPARK PLUGS**
   (7A-FE: See page IG-1)
   (5S-FE: See page IG-1)

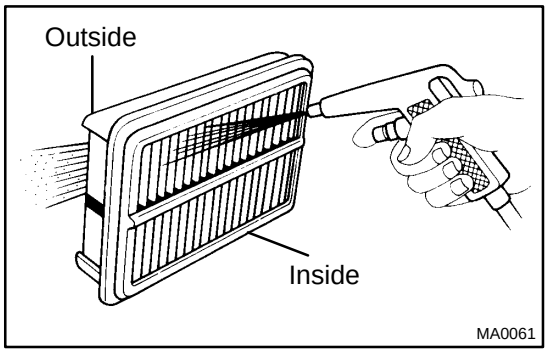

4. **INSPECT AIR FILTER**

(a) Visually check that the air filter is not excessively dirty, damaged or oily.

If necessary, replace the air filter.

(b) Clean the air filter compressed air.
First blow from the inside thoroughly, then blow off the outside of the air filter.

5. **REPLACE AIR FILTER**

Replace the air filter with a new one.

6. **REPLACE ENGINE OIL AND OIL FILTER**
   (7A-FE: See page LU-2)
   (5S-FE: See page LU-2)
7. **REPLACE ENGINE COOLANT**
   (7A-FE: See page CO-2)
   (5S-FE: See page CO-2)
8. **INSPECT CHARCOAL CANISTER**
   (7A-FE: See page EC-5)
   (5S-FE: See page EC-6)
9. **REPLACE GASKET IN FUEL TANK CAP**
   (7A-FE: See page SF-27)
   (5S-FE: See page SF-30)
10. **INSPECT FUEL LINES AND CONNECTIONS**
    (7A-FE: See page SF-27)
    (5S-FE: See page SF-30)
11. **INSPECT EXHAUST PIPES AND MOUNTINGS**
    (7A-FE: See page EC-12)
    (5S-FE: See page EC-14)
12. **ADJUST VALVE CLEARANCE**
    (7A-FE: See page EM-4)
    (5S-FE: See page EM-4)

BO1DL-05

INSPECTION

INSPECT FRONT DOOR GLASS

Check the following items. If the conditions are not met, readjust the glass.

(1) When you close the door with the glass fully closed, the a-a, b-b sections are in the same conditions shown in the illustration.

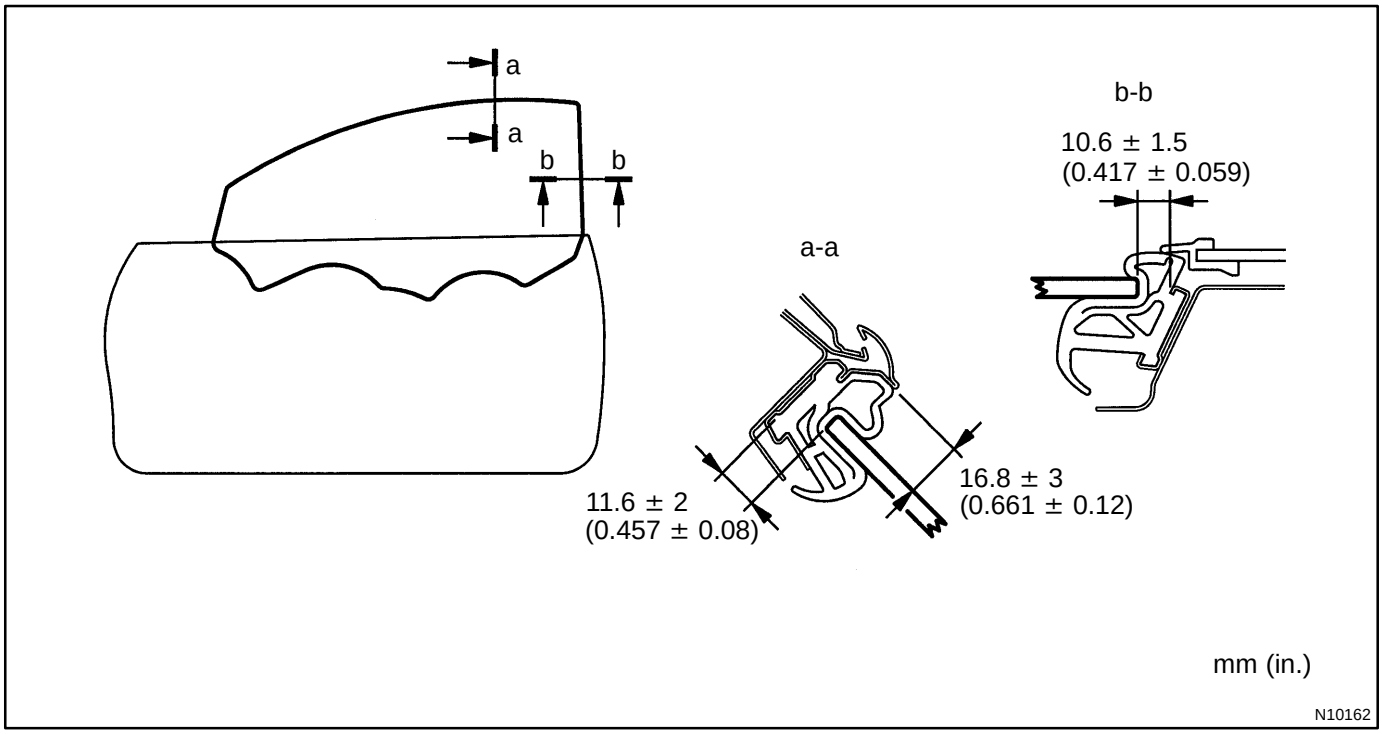

(2) When you push the glass firmly from inside, the glass stops at the roof drip moulding and does not move.

(3) When you close the door with the glass fully closed, the glass is not caught in the outside lip of the weatherstrip and dose no touch the roof drip moulding.

(4) With the door closed, the glass moves smoothly.

(5) The upper edge of the glass cannot be seen from outside of the vehicle (The edge is touching the roof side rail weatherstrip).

(6) When the glass is being raised, the glass and roof side rail weatherstrip are parallel, and the front and rear door window upper stops touch at the same time.

SA133-01

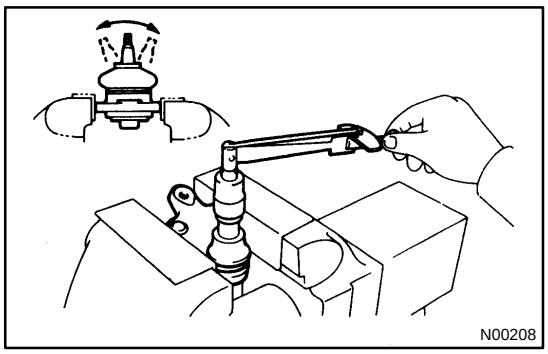

INSPECTION

INSPECT LOWER BALL JOINT FOR ROTATION CONDITION

(a) As shown, flip the ball joint stud back and forth 5 times, before installing the nut.

(b) Using a torque wrench, turn the nut continuously one turn per 2 - 4 seconds and take the torque reading on the 5th turn.

Turning torque:

1.0 - 2.9 N·m (10 - 30 kgf·cm, 8.7 - 26 in.·lbf)

SA138-01

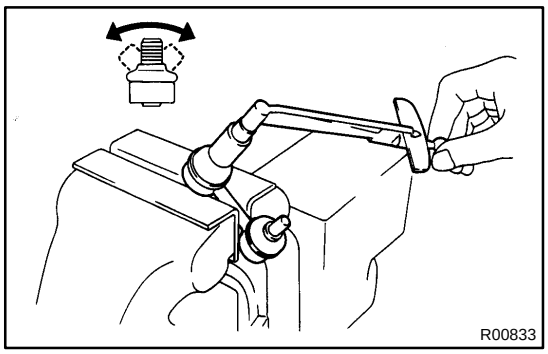

INSPECTION

INSPECT FRONT STABILIZER BAR LINK BALL JOINT FOR ROTATION CONDITION

(a) As shown, flip the ball joint stud back and forth 5 times, before installing the nut.

(b) Using a torque wrench, turn the nut continuously one turn per 2 - 4 seconds and take the torque reading on the 5th turn.

Turning torque:
0.05 - 1.0 N·m (0.5 - 10 kgf·cm, 0.4 - 8.7 in.·lbf)

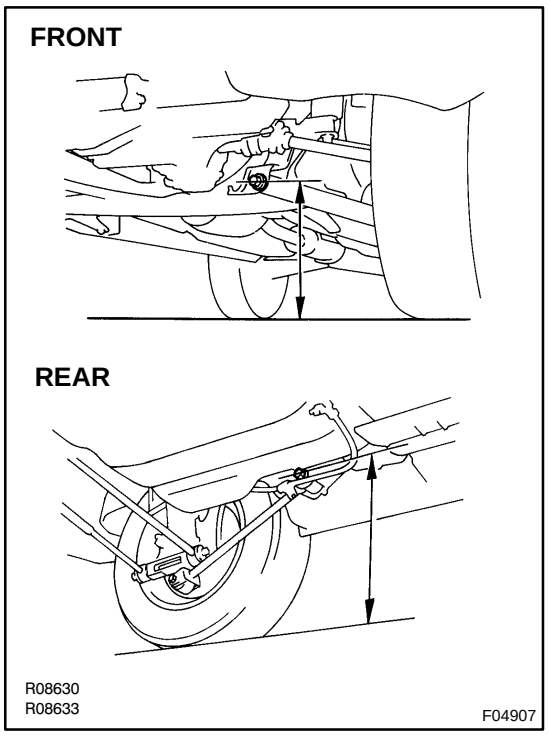

FRONT WHEEL ALIGNMENT

SA12F-02

INSPECTION

1. MEASURE VEHICLE HEIGHT

Tire size	Front mm (in.)	Rear mm (in.)
P185/70R14	187.6 (7.39)	255.8 (10.07)
P205/55R15	182.6 (7.19)	250.0 (9.84)

*1: Front measuring point

Measure the distance from the ground to the center of the front side lower suspension arm mounting bolt.

*2: Rear measuring point

Measure the distance from the ground to the center of the strut rod mounting bolt.

NOTICE:

Before inspecting the wheel alignment, adjust the vehicle height to the specification.

If the vehicle height is not within the specification, try to adjust it by pushing down on or lifting the body.

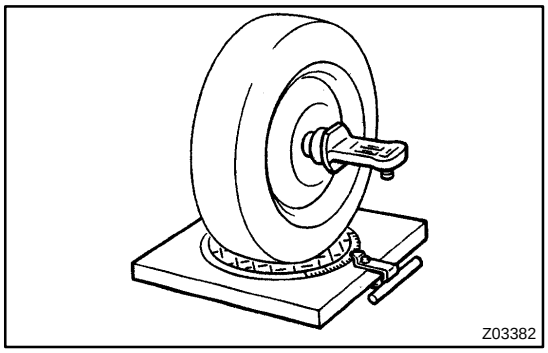

2. INSTALL CAMBER-CASTER-KINGPIN GAUGE OR POSITION VEHICLE ON WHEEL ALIGNMENT TESTER

Follow the specific instructions of the equipment manufacturer.

3. INSPECT CAMBER, CASTER AND STEERING AXIS INCLINATION

	7A - FE	5S - FE
Camber	- 0°51' ± 45'	- 0°46' ± 45'
	(- 0.85° ± 0.75°)	(- 0.77° ± 0.75°)
Left - right error	45' (0.75°) or less	45' (0.75°) or less
Caster	2°07' ± 45'	2°05' ± 45'
	(2.12° ± 0.75°)	(2.08° ± 0.75°)
Left - right error	45' (0.75°) or less	45' (0.75°) or less
Steering axis inclination	15°06' ± 45'	14°58' ± 45'
	(15.10° ± 0.75°)	(14.97° ± 0.75°)

If the caster and steering axis inclination are not within the specification, after the camber has been correctly adjusted, recheck the suspension parts for damaged and/or worn-out parts.

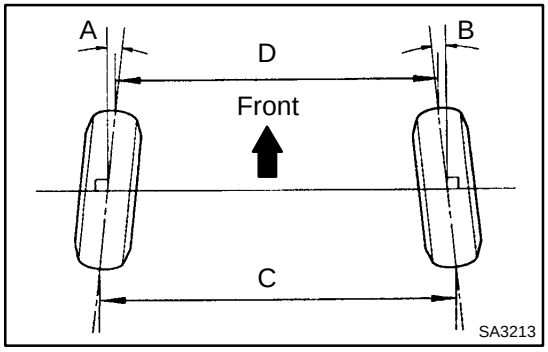

4. INSPECT TOE-IN

Toe-in (total)	A + B: 0° ± 12' (0° ± 0.2°) C - D: 0 ± 2 mm (0 ± 0.08 in.)

If the toe-in is not within the specification, adjust it at the rack ends.

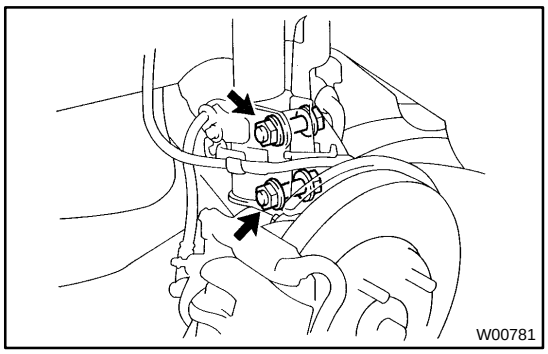
W00781

5. ADJUST CAMBER

NOTICE:

After the camber has been adjusted, inspect the toe-in.

(a) Remove the front wheels.

(b) Remove the 2 nuts on the lower side of the shock absorber.

(c) Coat the threads of the nuts with engine oil.

(d) Temporarily install the 2 nuts.

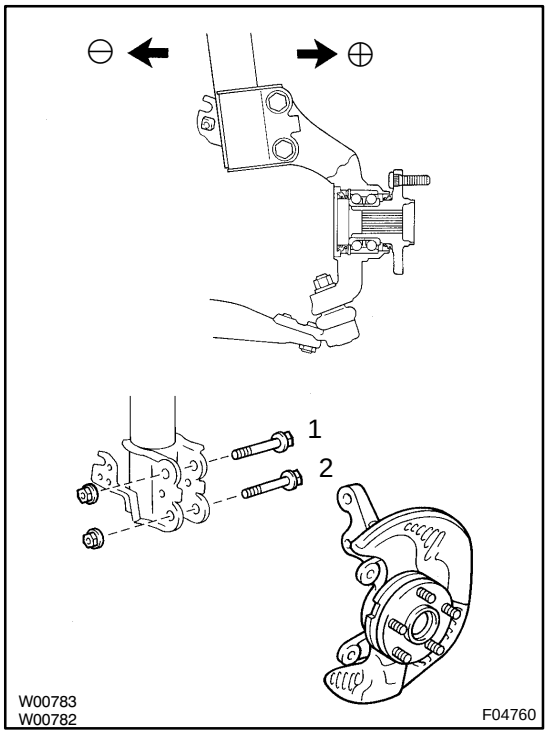

W00783
W00782
F04760

(e) Adjust the camber by pushing or pulling the lower side of the shock absorber in the direction in which the camber adjustment is required.

(f) Tighten the 2 nuts.

Torque: 153 N·m (1,560 kgf·cm, 113 ft·lbf)

(g) Install the front wheels.

Torque: 103 N·m (1,050 kgf·cm, 76 ft·lbf)

(h) Check the camber.

HINT:

- Try to adjust the camber to the center value.
- Adjusting value for the set bolts is 0˚06' - 0˚30' (0.1˚ - 0.5˚).

If the camber is not within the specification, using the table below, estimate how much additional camber adjustment will be required, and select the camber adjusting bolt.

Bolt / Adjusting Value	Set Bolt		Adjusting Bolt					
	90105-15001		90105-15004		90105-15005		90105-15006	
			1 Dot		2 Dots		3 Dots	
	11		•11		•11•		•11••	
	1	2	1	2	1	2	1	2
15'	●			●				
30'	●					●		
45'	●							●
1˚00'			●					●
1˚15'					●			●
1˚30'							●	●

F01195

(i) Do the steps mentioned above again. Between the step (b) and (c), exchange 1 or 2 selected bolts.

HINT:

When exchanging 2 bolts, exchange 1 bolt for each time.

6. ADJUST TOE-IN

(a) Remove the boot clamps.

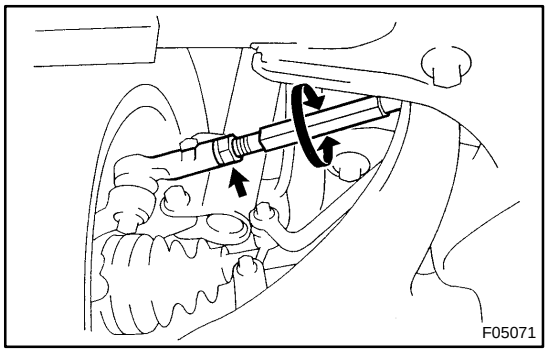

(b) Loosen the tie rod end lock nuts.
(c) Turn the left and right rack ends an equal amount to adjust the toe-in.

HINT:

- Try to adjust the toe-in to the center value.

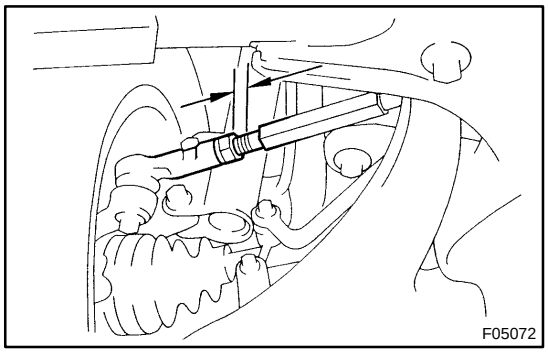

- Make sure that the lengths of the left and right rack ends are the same.

  Rack end length difference: 1.5 mm (0.059 in.) or less

(d) Torque the tie rod end lock nuts.

Torque: 56 N·m (570 kgf·cm, 41 ft·lbf)

(e) Place the boot on the seat and install the clamp.

HINT:

Make sure that the boots are not twisted.

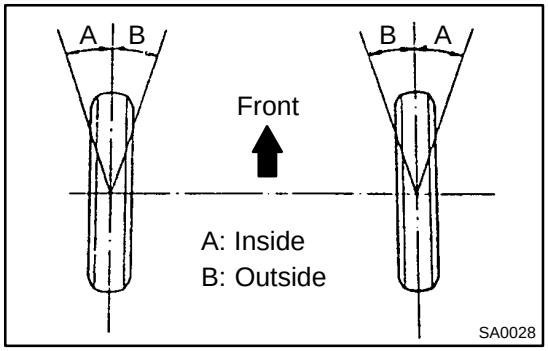

7. INSPECT WHEEL ANGLE

Turn the steering wheel fully, and measure the turning angle.

	7A - FE	5S - FE
Inside wheel	36˚44' ± 2˚ (36.73˚ ± 2˚)	36˚54' ± 2˚ (36.90˚ ± 2˚)
Outside wheel: Reference	30˚38' (30.63˚)	30˚44' (30.73˚)

If the wheel angles differ from the standard specification, adjust the toe-in.

BO1DV-03

INSPECTION

INSPECT FRONT WASHER NOZZLE

(a) While operating the washer, check that the point where the washer fluid hits the windshield is within the range indicated by the hatched area.

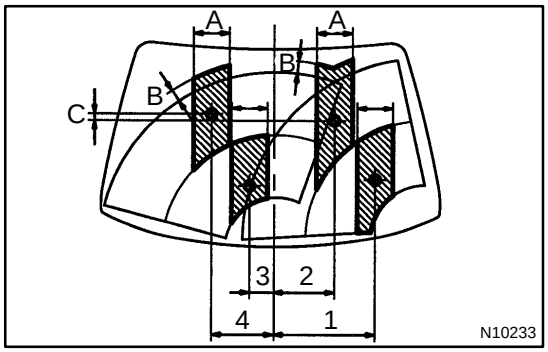

U.S.A.:
A: Approx. 150 mm (5.91 in.)
B: Approx. 50 mm (1.97 in.)
C: Within 50 mm (1.97 in.)
1: Approx. 425 mm (16.73 in.)
2: Approx. 250 mm (9.84 in.)
3: Approx. 100 mm (3.94 in.)
4: Approx. 260 mm (10.24 in.)

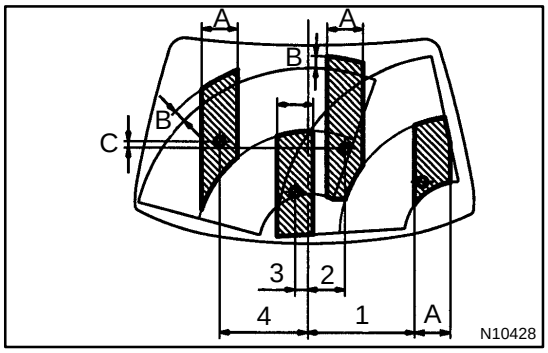

CANADA:
A: Approx. 150 mm (5.91 in.)
B: Approx. 50 mm (1.97 in.)
C: Within 50 mm (1.97 in.)
1: Approx. 455 mm (17.91 in.)
2: Approx. 155 mm (6.10 in.)
3: Approx. 50 mm (1.97 in.)
4: Approx. 360 mm (14.17 in.)

(b) Check if the lower point where the washer fluid hits the windshield is within the range of the wiping pattern (the area of the glass which is wiped by the wiper blades).

SR01W-08

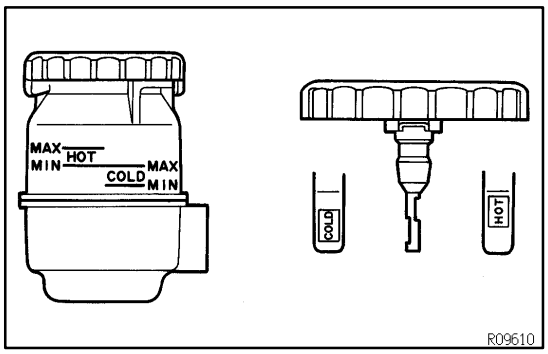

INSPECTION

1. CHECK FLUID LEVEL

(a) Keep the vehicle level.

(b) With the engine stopped, check the fluid level in the oil reservoir.

If necessary, add fluid.

Fluid: ATF DEXRON® II or III

HINT:

- 7A-FE:
  Check that the fluid level is within the HOT LEVEL of the dipstick of the reservoir cap. If the fluid is cold, check that it is within the COLD LEVEL of the dipstick.
- 5S-FE:
  Check that the fluid level is within the HOT LEVEL range on the reservoir. If the fluid is cold, check that it is within the COLD LEVEL range.

(c) Start the engine and run it at idle.

(d) Turn the steering wheel from lock to lock several times to boost fluid temperature.

Fluid temperature: 80˚C (176˚F)

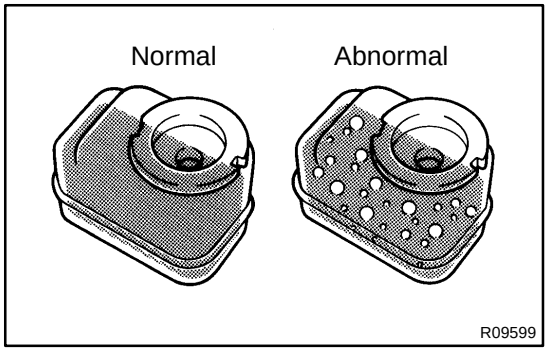

(e) Check for foaming or emulsification.

If there is foaming or emulsification, bleed power steering system (See page SR-4).

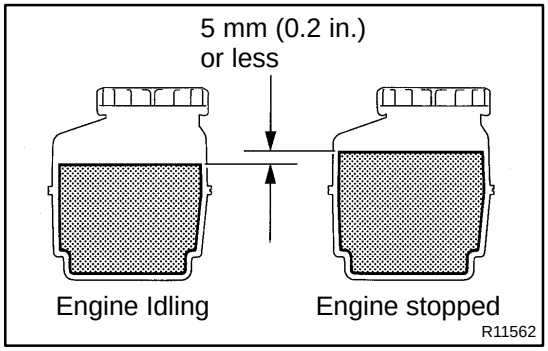

(f) With the engine idling, measure the fluid level in the oil reservoir.

(g) Stop the engine.

(h) Wait a few minutes and remeasure the fluid level in the oil reservoir.

Maximum fluid level rise: 5 mm (0.20 in.)

If a problem is found, bleed power steering system (See page SR-4).

(i) Check the fluid level.

2. CHECK STEERING FLUID PRESSURE

(a) Disconnect the pressure feed tube.
(7A-FE Eigine: See page SR-35)
(5S-FE Eigine: See page SR-46)

(b) Connect SST, as shown below.
SST 09640- 10010 (09641- 01010, 09641- 01030, 09641-01040)

NOTICE:

Check that the valve of the SST is in the open position.

(c) Bleed the power steering system (See page SR-4).

(d) Start the engine and run it at idle.

(e) Turn the steering wheel from lock to lock several times to boost fluid temperature.
Fluid temperature: 80 ˚C (176 ˚F)

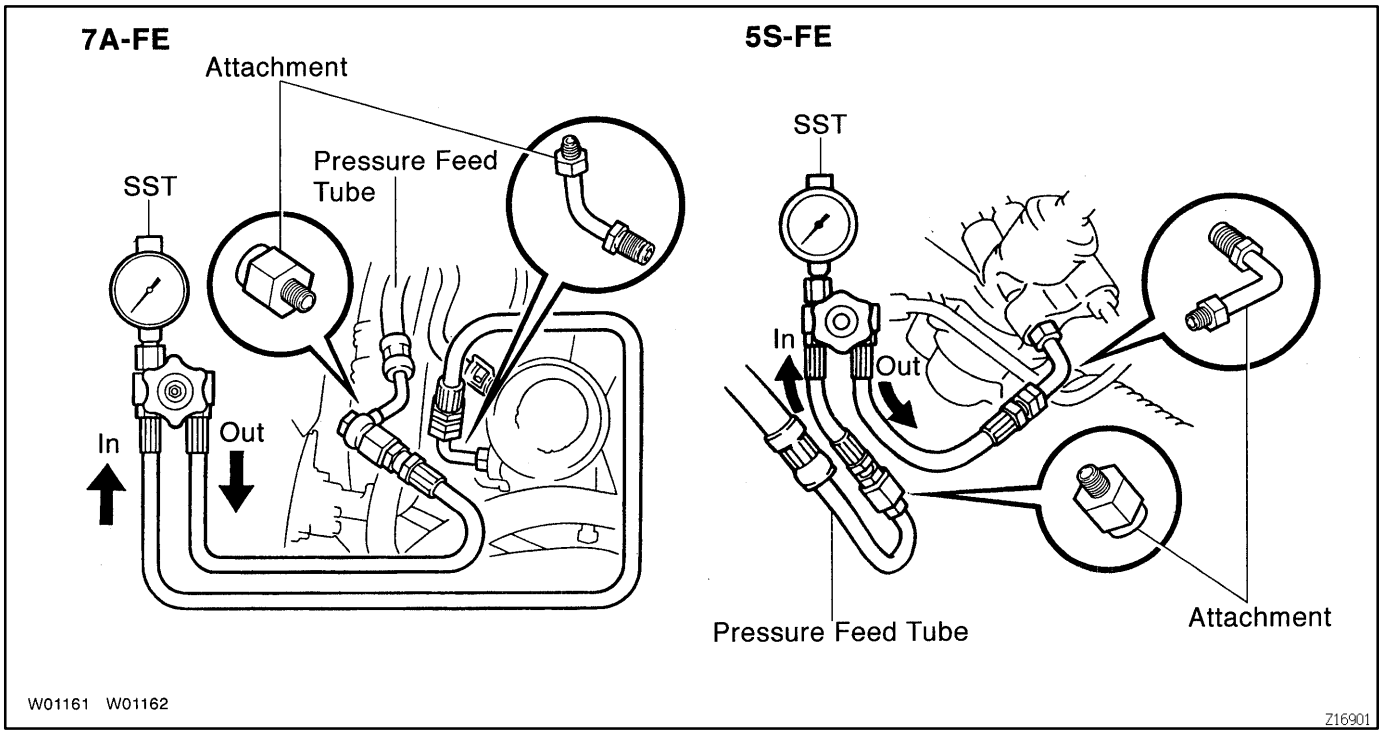

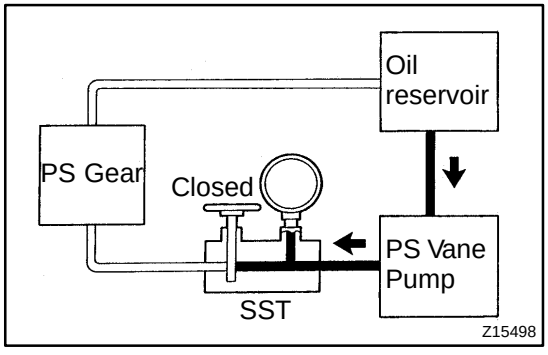

(f) With the engine idling, close the valve of the SST and observe the reading on the SST.
Minimum fluid pressure:
7A-FE Engine: 6,865 kPa (70 kgf/cm^2, 996 psi)
5S-FE Engine: 8,826 kPa (90 kgf/cm^2, 1,280 psi)

NOTICE:

- **Do not keep the valve closed for more than 10 seconds.**
- **Do not let the fluid temperature become too high.**

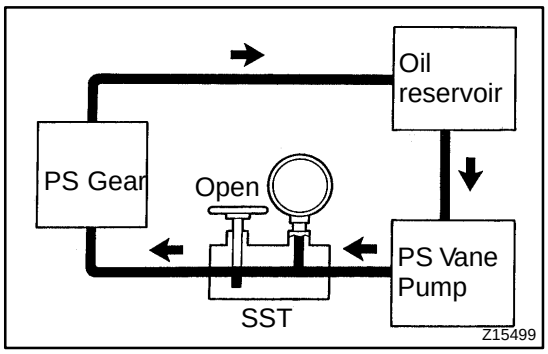

(g) With the engine idling, open the valve fully.

(h) Measure the fluid pressure at engine speeds of 1,000 rpm and 3,000 rpm.

Difference fluid pressure:

490 kPa (5 kgf/cm^2, 71 psi) or less

NOTICE:

Do not turn the steering wheel.

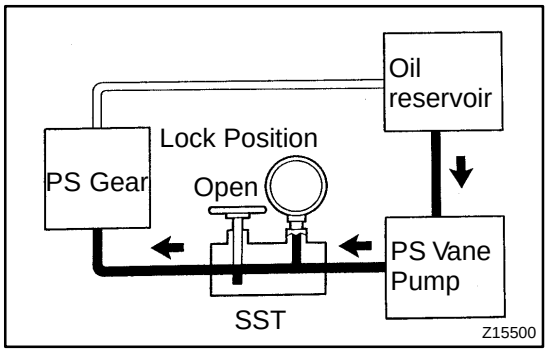

(i) With the engine idling and valve fully opened, turn the steering wheel to full lock.

Minimum fluid pressure:

7A-FE Engine: 6,865 kPa (70 kgf/cm^2, 996 psi)

5S-FE Engine: 8,826 kPa (90 kgf/cm^2, 1,280 psi)

NOTICE:

- **Do not maintain lock position for more than 10 seconds.**
- **Do not let the fluid temperature become too high.**

(j) Disconnect the SST.

(k) Connect the pressure feed tube.
(7A-FE Eigine: See page SR-43)
(5S-FE Eigine: See page SR-54)

(l) Bleed the power steering system (See page SR-4).

SR0KA-03

INSPECTION

NOTICE:

When using a vise, do not overtighten it.

1. INSPECT STEERING RACK

(a) Using a dial indicator, check the rack for runout and for teeth wear and damage.

Maximum runout: 0.30 mm (0.0118 in.)

(b) Check the back surface for wear and damage.

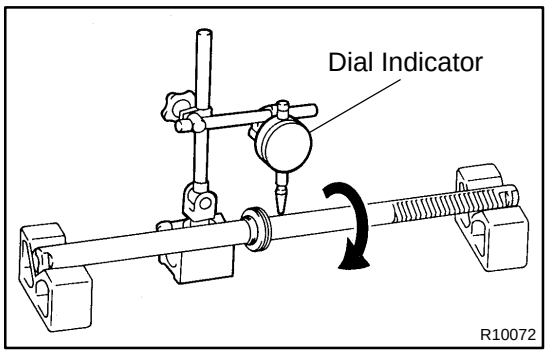

2. IF NECESSARY, REPLACE OIL SEAL AND BEARING

(a) Using SST, press out the oil seal and bearing from the control valve housing.

SST 09950-60010 (09951-00240), 09950-70010 (09951-07100)

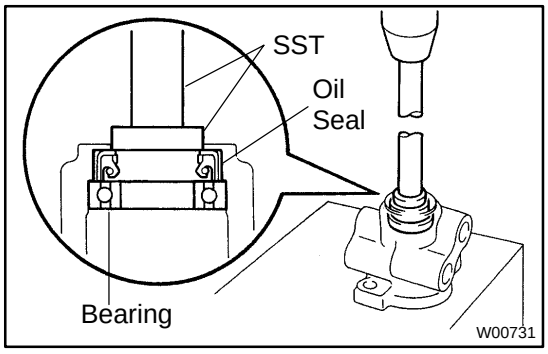

(b) Coat a new oil seal lip with power steering fluid.

(c) Using SST, press in the oil seal.

SST 09950-60010 (09951-00180, 09951-00310, 09952-06010), 09950-70010 (09951-07100)

NOTICE:

Make sure you install the oil seal facing the correct direction.

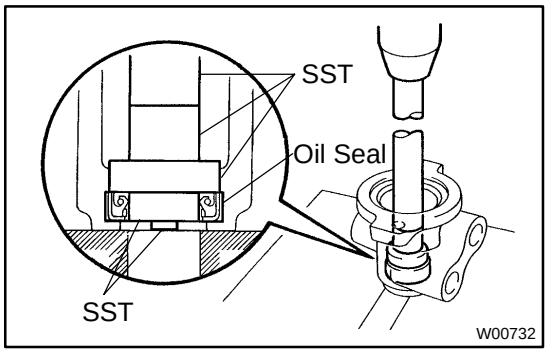

(d) Using SST, press in a new bearing.

SST 09950-60010 (09951-00340), 09950-70010 (09951-07100)

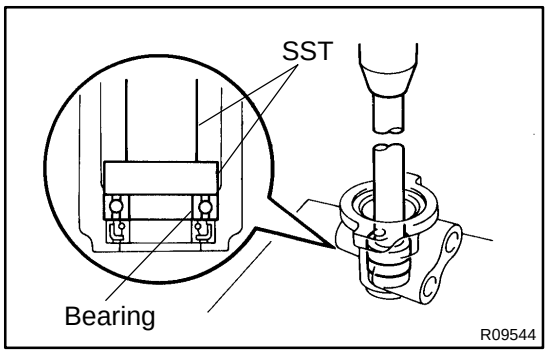

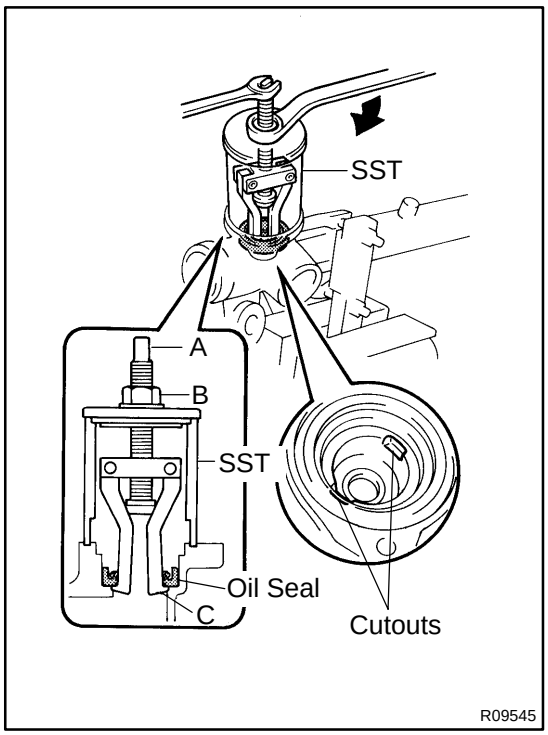

3. IF NECESSARY, REPLACE OIL SEAL

(a) Set SST, as shown in the illustration.
SST 09612-30012

(b) Turn A clockwise and engage the tips of C on the oil seal.

HINT:

Apply the tips of C to the cutouts in the rack housing.

(c) Using a spanner (8 mm), keep A fixed while turning nut B clockwise, and remove the oil seal from the rack housing.

NOTICE:

Be careful not to damage the rack housing.

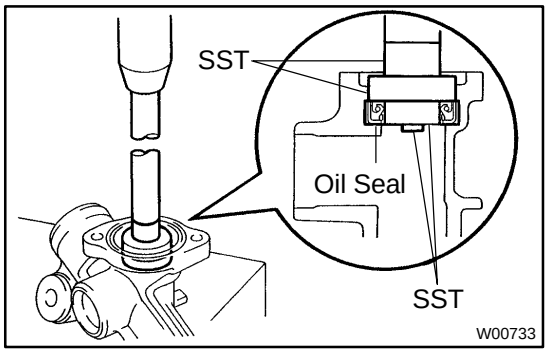

(d) Coat a new oil seal lip with power steering fluid.

(e) Using SST, press in the oil seal.
SST 09950-60010 (09951-00290, 09951-00430, 09952-06010), 09950-70010 (09951-07100)

NOTICE:

Make sure you install the oil seal facing the correct direction.

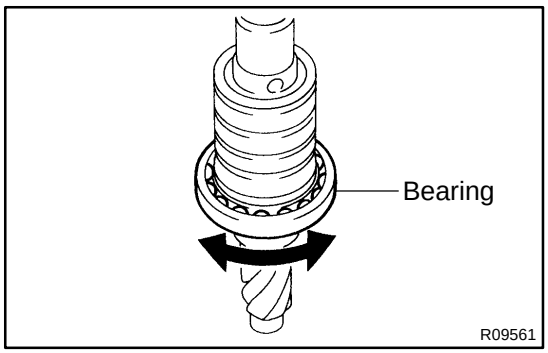

4. INSPECT BEARING

Check the bearing rotation condition and check for abnormal noise.

If the bearing is worn or damaged, replace the control valve assembly.

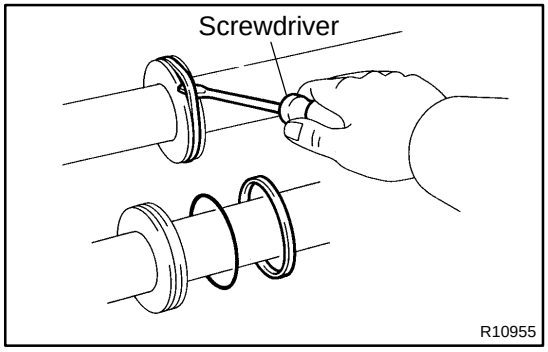

5. IF NECESSARY, REPLACE TEFLON RING AND O-RING

(a) Using a screwdriver, remove the teflon ring and O-ring from the steering rack.

NOTICE:

Be careful not to damage the groove for the teflon ring.

(b) Coat a new O-ring with power steering fluid, and install it.

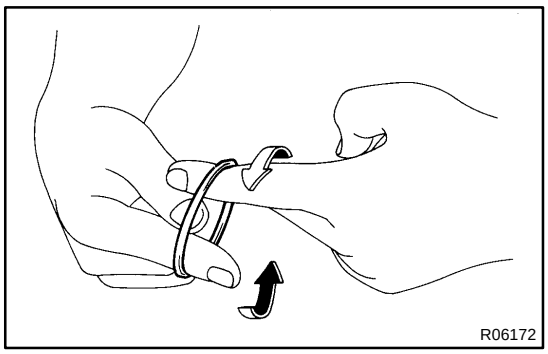

(c) Expand a new teflon ring with your fingers.

NOTICE:

Be careful not to over-expand the ring.

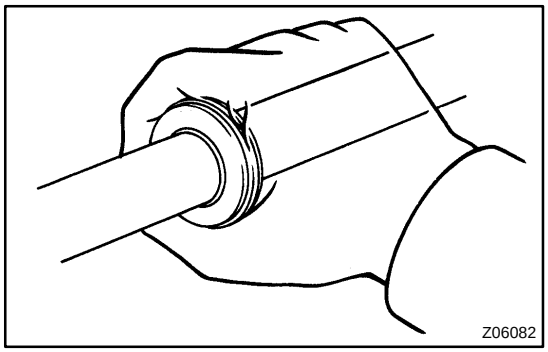

(d) Coat the ring with power steering fluid.

(e) Install the ring to the steering rack, and snug it down with your fingers.

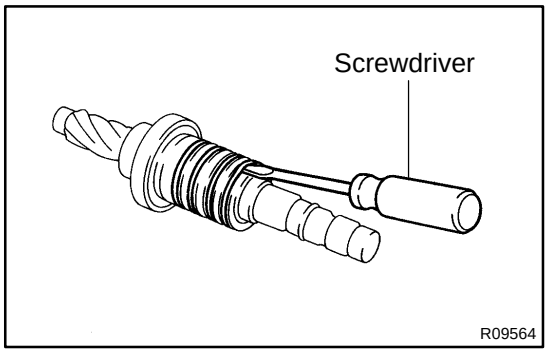

6. IF NECESSARY, REPLACE TEFLON RINGS

(a) Using a screwdriver, remove the 4 rings from the control valve assembly.

NOTICE:

Be careful not to damage the grooves for the ring.

(b) Expand 4 new rings with your fingers.

NOTICE:

Be careful not to over-expand the ring.

(c) Coat the rings with power steering fluid.

(d) Install the rings to the control valve assembly, and snug them down with your fingers.

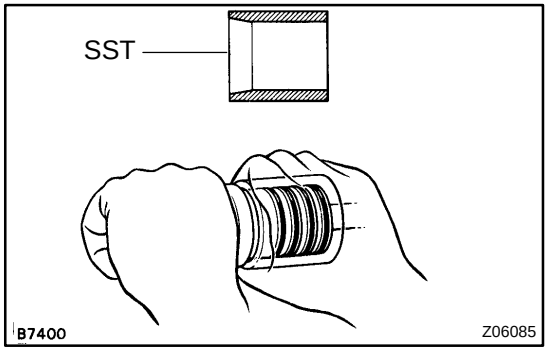

(e) Carefully slide the tapered end of SST over the rings to seat them.

SST 09631-20081

NOTICE:

Be careful not to damage the rings.

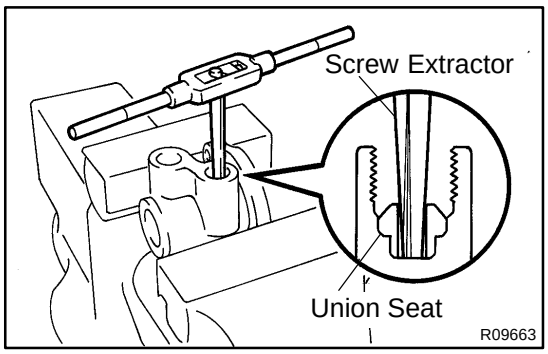

7. IF NECESSARY, REPLACE UNION SEATS

(a) Using a screw extractor, remove the 4 seats from the control valve housing.

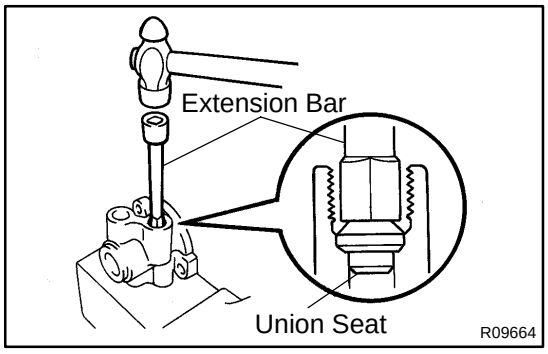

(b) Using an extension bar and hammer, tap in 4 new seats.

NOTICE:

Before installing the union seat, remove dust sticking to the control valve housing.

SA13H-01

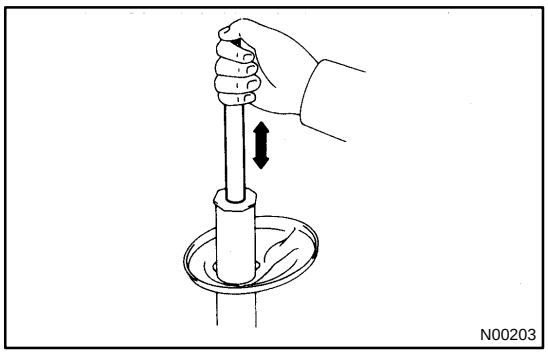

INSPECTION

INSPECT SHOCK ABSORBER

Compress and extend the shock absorber rod and check that there is no abnormal resistance or unusual operation sound.

If there is any abnormality, replace the shock absorber with a new one.

NOTICE:

When discarding the shock absorber, see DISPOSAL on page SA-63 .

SA13S-01

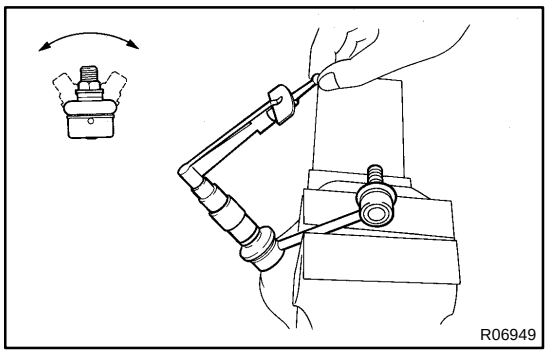

INSPECTION

INSPECT REAR STABILIZER BAR LINK BALL JOINT FOR ROTATION CONDITION

(a) As shown, flip the ball joint stud back and forth 5 times before installing the nut.

(b) Using a torque wrench, turn the nut continuously one turn per 2 - 4 seconds and take the torque reading on the 5th turn.

Turning torque:
0.05 - 1.0 N·m (0.5 - 10 kgf·cm, 0.4 - 8.7 in.·lbf)

REAR WHEEL HUB BOLT

SA13D-02

REPLACEMENT

1. REMOVE REAR WHEEL

2. w/ Drum brake:
REMOVE BRAKE DRUM

3. REMOVE BRAKE CALIPER AND DISC

(a) Remove the 2 bolts and brake caliper.

(b) Support the brake caliper securely.

(c) Remove the disc.

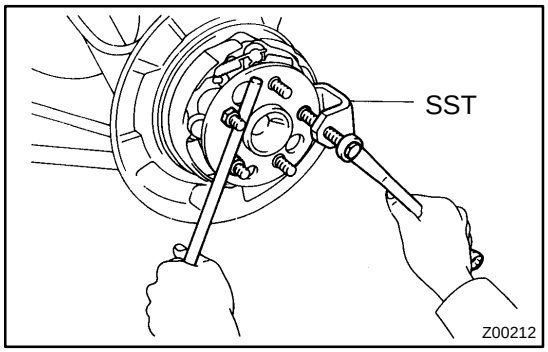

4. REMOVE HUB BOLT

Using SST, remove the hub bolt.

SST 09628-1001 1

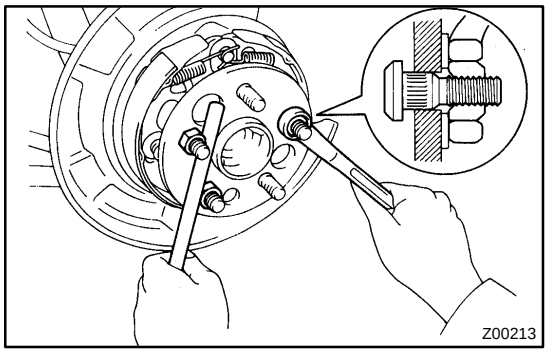

5. INSTALL NEW HUB BOLT

Install a washer and nut to the hub bolt, as shown in the illustration, and install the hub bolt by tightening the nut.

6. INSTALL DISC AND BRAKE CALIPER

(a) Install the disc.

(b) Install the brake caliper and 2 bolts.

Torque: 47 N·m (475 kgf·cm, 34 ft·lbf)

7. w/ Drum brake:
INSTALL BRAKE DRUM

8. INSTALL REAR WHEEL

Torque: 103 N·m (1,050 kgf·cm, 76 ft·lbf)

REAR WHEEL ALIGNMENT

SA12G-02

INSPECTION

1. MEASURE VEHICLE HEIGHT (See page SA-4)

2. INSTALL CAMBER-CASTER-KINGPIN GAUGE OR POSITION VEHICLE ON WHEEL ALIGNMENT TESTER

Follow the specific instructions of the equipment manufacturer.

3. INSPECT CAMBER

	7A - FE	5S - FE
Camber	- 1˚16' ± 45' (- 1.27˚ ± 0.75˚)	- 1˚10' ± 45' (- 1.17˚ ± 0.75˚)
Left - right error	45' (0.75˚) or less	45' (0.75˚) or less

Camber is not adjustable, if measurement is not within specification, inspect and replace the suspension parts as necessary.

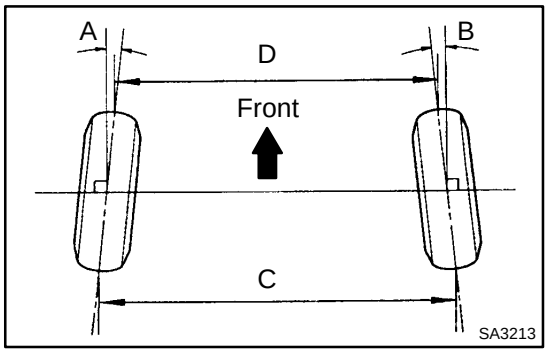

4. INSPECT TOE-IN

Toe-in (total)	A + B: 0˚21' ± 12' (0.35˚ ± 0.2˚) C - D: 3.5 ± 2 mm (0.14 ± 0.08 in.)

If the toe-in is not within the specification, adjust it at the No.2 lower suspension arm.

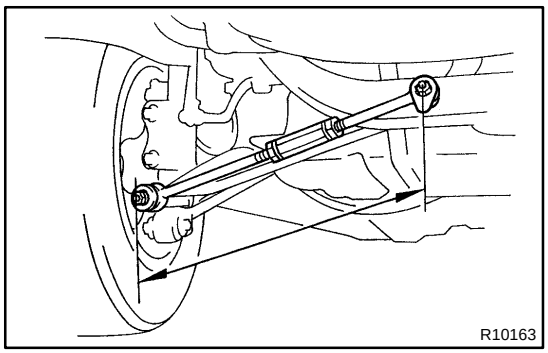

5. ADJUST TOE-IN

(a) Measure the length of the left and right No.2 lower suspension arms.

No.2 lower suspension arm length difference:
1 mm (0.04 in.) or less

If the left-right difference is greater than the specification, adjust the length.

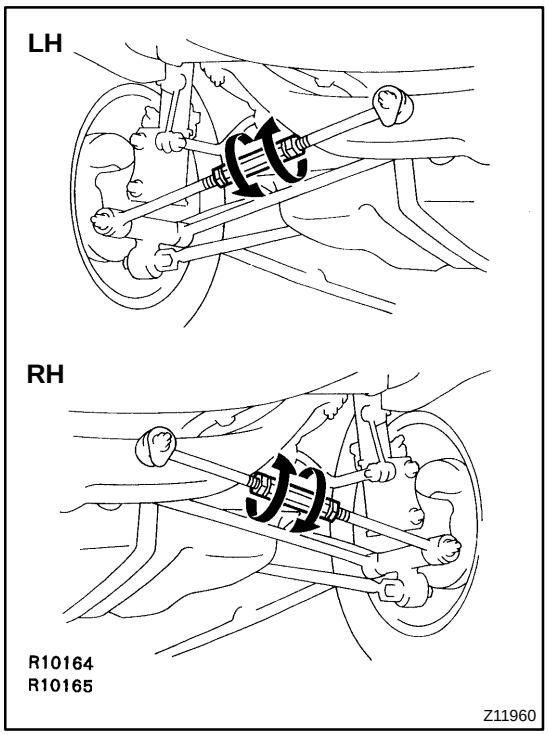

(b) Loosen the lock nuts.

(c) Turn the left and right adjusting tubes an equal amount to adjust toe-in.

HINT:

- Try to adjust the toe-in to the center value.
- One turn of each adjusting tube will adjust the toe-in by about 54' (0.9°, 9 mm, 0.354 in.).

(d) Torque the lock nuts.

Torque: 75 N·m (760 kgf·cm, 55 ft·lbf)

BO1E0-04

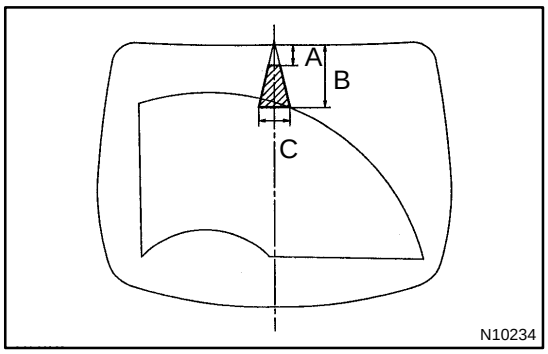

INSPECTION

INSPECT REAR WASHER NOZZLE

(a) While operating the washer, check that the point where the washer fluid hits the back door glass is within the range indicated by hatched area.
A: Approx. 50 mm (1.97 in.)
B: Approx. 200 mm (7.87 in.)
C: Approx. 104 mm (4.09 in.)

(b) Check if the lower point where the washer fluid hits the glass is within the range of the wiping pattern (the area of the glass which is wiped by the wiper blades).

MX04L-02

INSPECTION

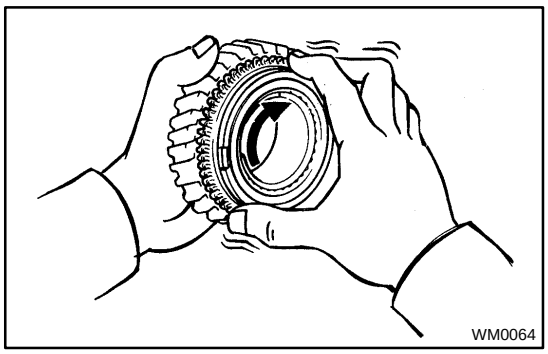
WM0064

1. INSPECT SYNCHRONIZER RING

(a) Check for wear or damage.

(b) Check the braking effect of the synchronizer ring. Turn the synchronizer ring in one direction while pushing it to the gear cone. Check that the ring locks.

If the braking effect is insufficient, apply a small amount of the fine lapping compound between the synchronizer ring and gear cone. Lightly rub the synchronizer ring and gear cone together.

NOTICE:

Ensure the fine lapping compound is completely washed off after rubbing.

(c) Check again the braking effect of the synchronizer ring.

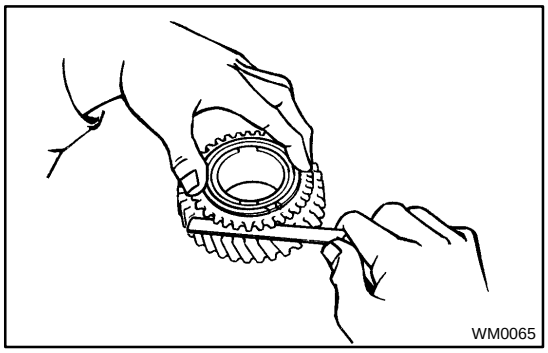
WM0065

(d) Using a feeler gauge, measure the clearance between the synchronizer ring back and gear spline end.

Minimum clearance: 0.6 mm (0.024 in.)

If the clearance is less than the minimum, replace the synchronizer ring, and apply a small amount of the fine lapping compound on gear cone.

NOTICE:

Ensure the fine lapping compound is completely washed off after rubbing.

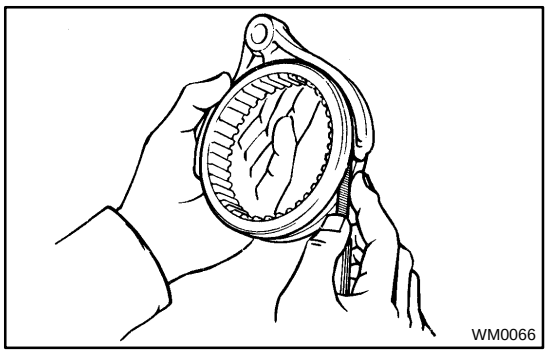
WM0066

2. INSPECT NO.2 SHIFT FORK AND HUB SLEEVE CLEARANCE

Using a feeler gauge, measure the clearance between the hub sleeve and shift fork.

Maximum clearance: 1.0 mm (0.039 in.)

If the clearance exceeds the maximum, replace shift fork or hub sleeve.

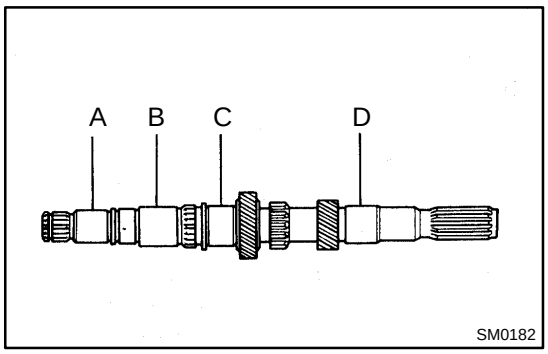

3. INSPECT INPUT SHAFT

(a) Check the input shaft for wear or damage.

(b) Using a micrometer, measure the outer diameter of the input shaft journal surface.

Minimum outer diameter:
Part A: 26.970 mm (1.0618 in.)
Part B: 32.470 mm (1.2783 in.)
Part C: 33.090 mm (1.3028 in.)
Part D: 29.970 mm (1.1799 in.)

If the outer diameter is less than the minimum, replace the input shaft.

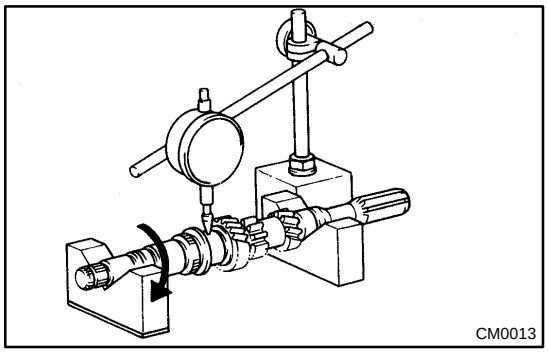

(c) Using a dial indicator, check the shaft runout.

Maximum runout: 0.05 mm (0.0020 in.)

If the runout exceeds the maximum, replace the input shaft.

MX0E3-01

INSPECTION

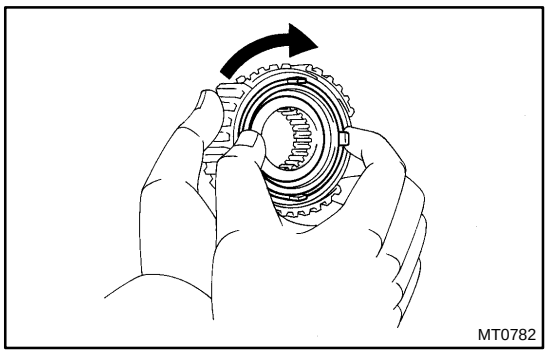

1. INSPECT NO.5 SYNCHRONIZER RING

(a) Check for wear or damage.

(b) Check the braking effect of the synchronizer ring.

Turn the middle No.5 synchronizer ring in one direction while pushing it to the outer No.5 synchronizer ring. Check that the ring locks.

If the braking effect is insufficient, replace the synchronizer ring.

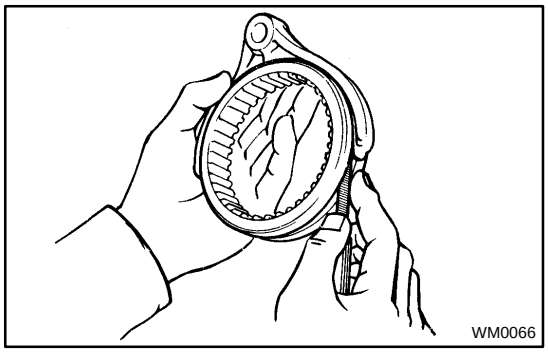

2. INSPECT NO.3 SHIFT FORK AND NO.3 HUB SLEEVE CLEARANCE

Using a feeler gauge, measure the clearance between the hub sleeve and shift fork.

Maximum clearance: 1.0 mm (0.039 in.)

If the clearance exceeds the maximum, replace the shift fork or hub sleeve.

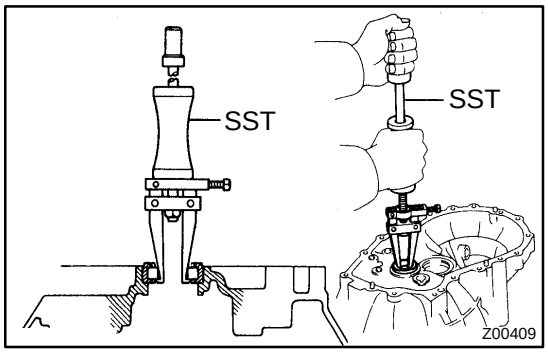

3. IF NECESSARY, REPLACE INPUT SHAFT FRONT BEARING

(a) Remove the 2 bolts and transaxle case receiver.

(b) Using SST, pull out the bearing.

SST 09308-00010

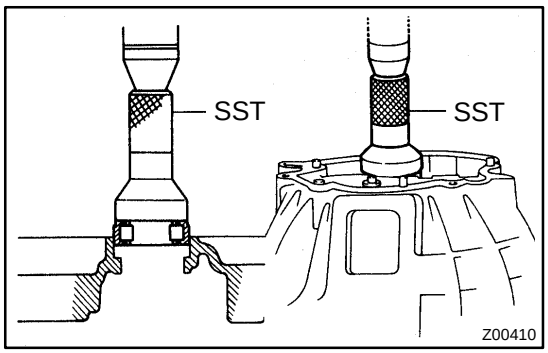

(c) Using SST, press in a new bearing.

SST 09310-35010

(d) Install the transaxle case receiver and torque the 2 bolts.

Torque: 7.4 N·m (75 kgf·cm, 65 in.·lbf)

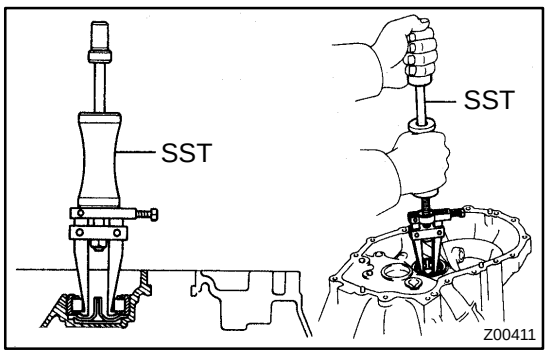

4. IF NECESSARY, REPLACE OUTPUT SHAFT FRONT BEARING

(a) Remove the bolt and bearing lock plate.

(b) Using SST, pull out the bearing.

SST 09308-00010

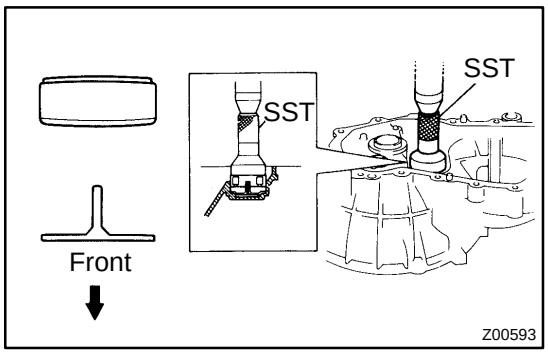

(c) Using SST, press in a new bearing.
SST 09310-35010

(d) Install the bearing lock plate and torque the bolt.
Torque: 18 N·m (185 kgf·cm, 13 ft·lbf)

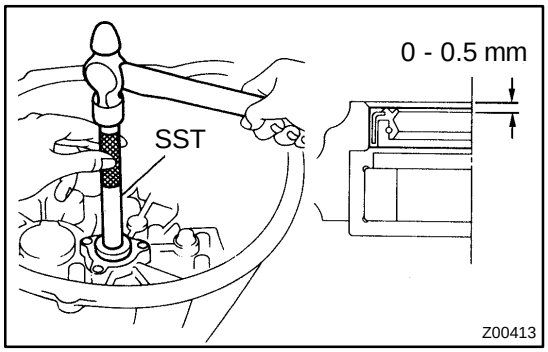

5. IF NECESSARY, REPLACE INPUT SHAFT FRONT OIL SEAL

(a) Using a screwdriver, pry out the oil seal.

(b) Using SST, drive in a new oil seal.
SST 09608-00081, 09950-70010 (09951-07150)
Drive in depth: 0 - 0.5 mm (0 - 0.020 in.)

(c) Coat the lip of the oil seal with MP grease.

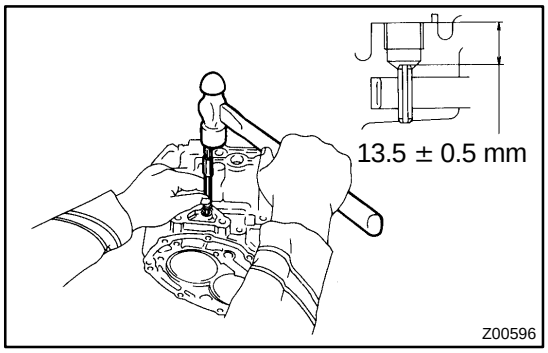

6. IF NECESSARY, REPLACE REVERSE RESTRICT PIN

(a) Using a hexagon wrench, remove the straight screw plug.

(b) Using a pin punch and hammer, drive out the slotted spring pin.

(c) Replace the reverse restrict pin.

(d) Using a pin punch and hammer, drive in the slotted spring pin.
Drive in depth: 13.5 ± 0.5 mm (0.531 ± 0.020 in.)

(e) Apply sealant to the plug threads.
Sealant:
Part No.08833 - 00080, THREE BOND 1344, LOCTITE 242 or equivalent

(f) Using a hexagon wrench, install and torque the straight screw plug.
Torque: 13 N·m (130 kgf·cm, 9 ft·lbf)

MX04P-02

INSPECTION

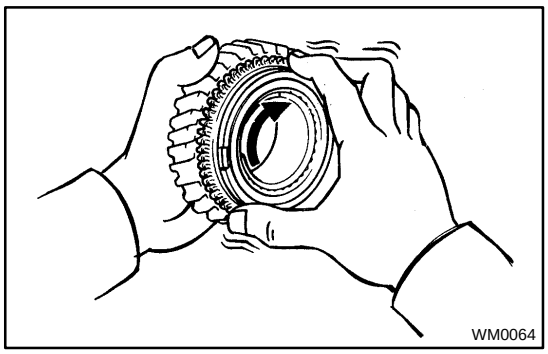

1. INSPECT 1ST GEAR SYNCHRONIZER RING

(a) Check for wear or damage.

(b) Check the braking effect of the synchronizer ring. Turn the synchronizer ring in one direction while pushing it to the gear cone. Check that the ring locks.

If the braking effect is insufficient, apply a small amount of the fine lapping compound between the synchronizer ring and gear cone. Lightly rub the synchronizer ring and gear cone together.

NOTICE:

Ensure the fine lapping compound is completely washed off after rubbing.

(c) Check again the braking effect of the synchronizer ring.

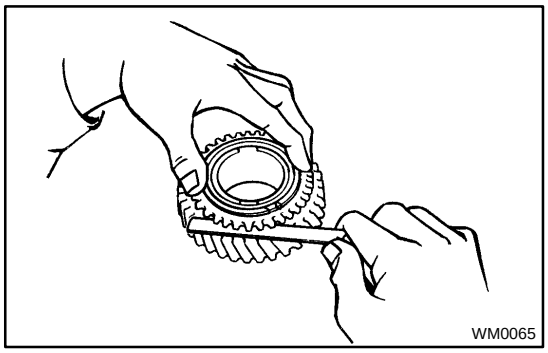

(d) Using a feeler gauge, measure the clearance between the synchronizer ring back and the gear spline end.

Minimum clearance: 0.6 mm (0.024 in.)

If the clearance is less than the minimum, replace the synchronizer ring, and apply a small amount of the fine lapping compound on gear cone.

NOTICE:

Ensure the fine lapping compound is completely washed off after rubbing.

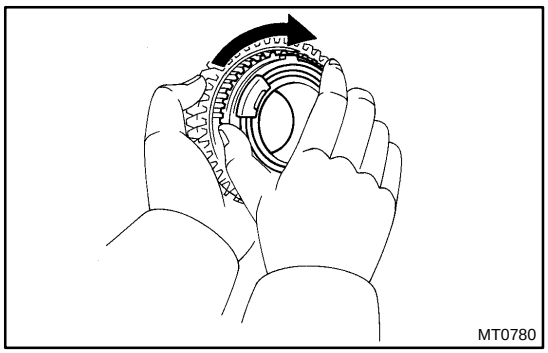

2. INSPECT 2ND GEAR SYNCHRONIZER RING

(a) Check for wear or damage.

(b) Check the braking effect of the synchronizer ring. Turn the synchronizer ring in one direction while pushing it to the gear cone. Check that the ring locks.

If the braking effect is insufficient, replace the synchronizer ring.

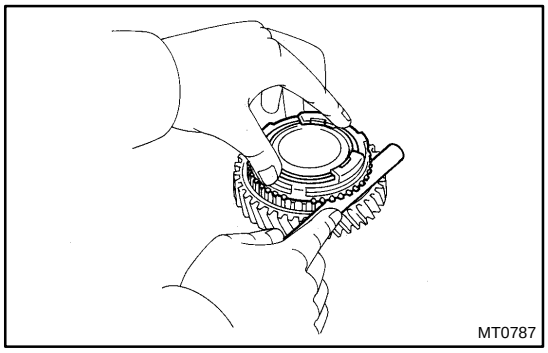

(c) Using a feeler gauge, measure the clearance between the synchronizer ring back and gear spline end.

Minimum clearance: 0.7 mm (0.028 in.)

If the clearance is less than the minimum, replace the synchronizer ring.

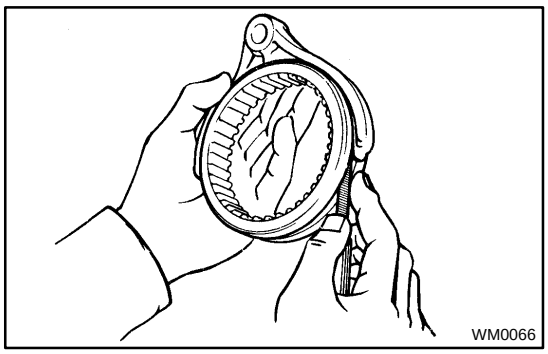

3. INSPECT SHIFT FORK AND HUB SLEEVE CLEARANCE

Using a feeler gauge, measure the clearance between the hub sleeve and shift fork.

Maximum clearance: 1.0 mm (0.039 in.)

If the clearance exceeds the maximum, replace the shift fork or hub sleeve.

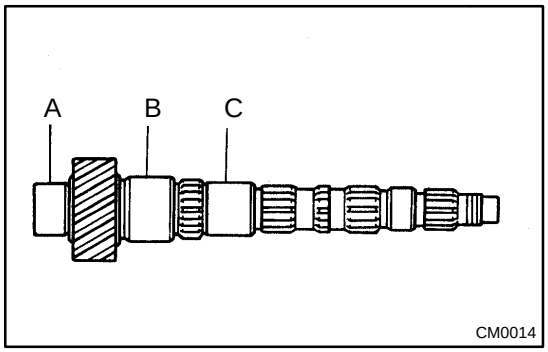

4. INSPECT OUTPUT SHAFT

(a) Using a micrometer, measure the outer diameter of the output shaft journal surface.

Minimum outer diameter:
Part A: 31.970 mm (1.2587 in.)
Part B: 37.970 mm (1.4949 in.)
Part C: 31.990 mm (1.2594 in.)

If the outer diameter is less than the minimum, replace the output shaft.

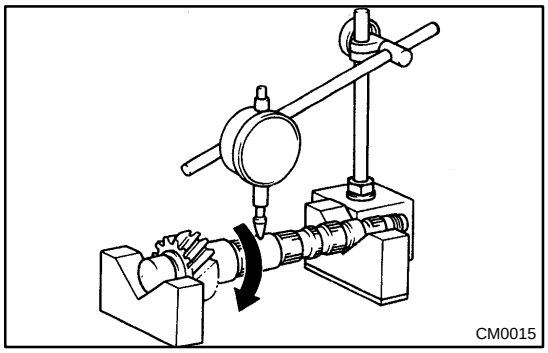

(b) Using a dial indicator, check the shaft runout.

Maximum runout: 0.05 mm (0.0020 in.)

If the runout exceeds the maximum, replace the output shaft.

SR0K5-03

INSPECTION

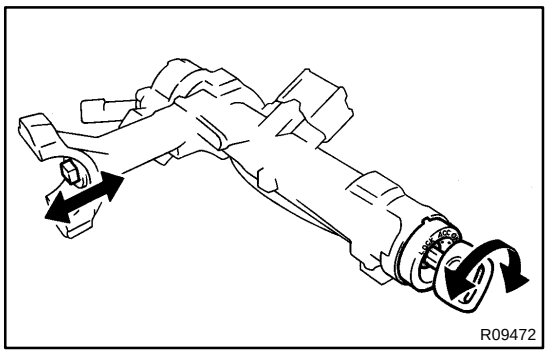

NOTICE:

When using a vise, do not overtighten it.

1. INSPECT STEERING LOCK OPERATION

Check that the steering lock mechanism operates properly.

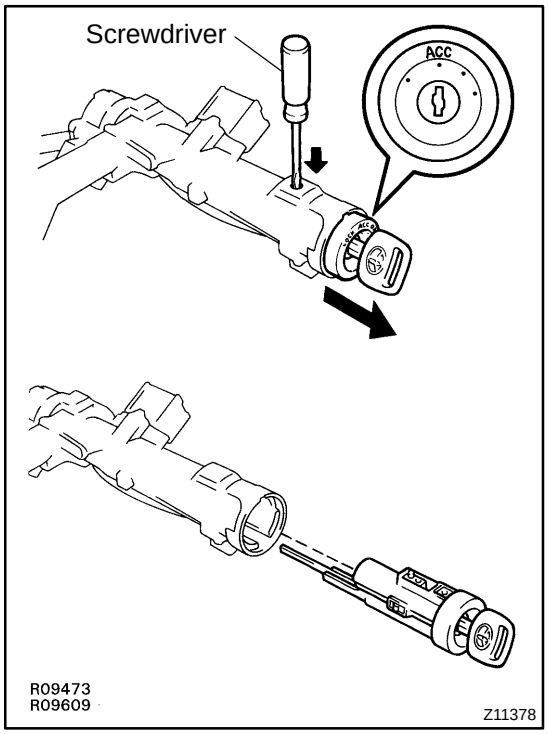

2. IF NECESSARY, REPLACE KEY CYLINDER

(a) Place the ignition key at the ACC position.

(b) Push down the stop pin with a screwdriver, and pull out the cylinder.

(c) Install a new cylinder.

HINT:

Make sure the ignition key is at the ACC position.

3. INSPECT KEY UNLOCK WARNING SWITCH
(See page BE-12)

4. IF NECESSARY, REPLACE KEY UNLOCK WARNING SWITCH

(a) Remove the 2 screws.

(b) Install a new switch with the 2 screws.

5. A/T:
INSPECT KEY INTERLOCK SOLENOID
(A140E: See page AX-12)
(A246E: See page AX-1 1)

6. A/T:
IF NECESSARY, REPLACE KEY INTERLOCK SOLENOID

7. IF NECESSARY, REPLACE KEY INTERLOCK SOLENOID

(a) Remove the 2 screws.

(b) Install a new solenoid with the 2 screws.

8. INSPECT IGNITION SWITCH
(See page BE-12)

9. IF NECESSARY, REPLACE IGNITION SWITCH

(a) Remove the 2 screws.

(b) Install a new switch with the 2 screws.

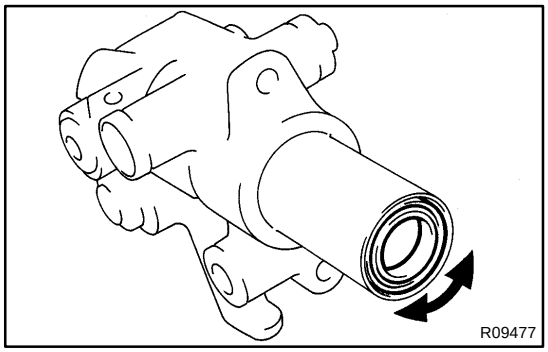

10. INSPECT BEARING

Check the bearing rotation condition and check for abnormal noise.

If the bearing is worn or damaged, replace the column tube.

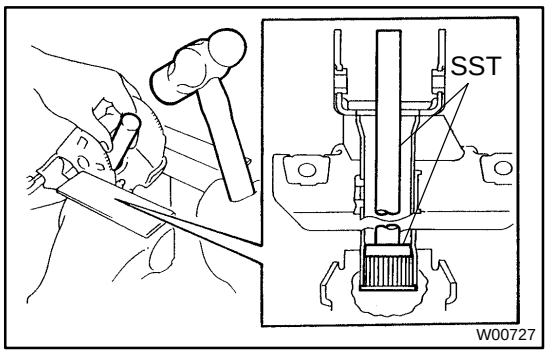

11. IF NECESSARY, REPLACE BUSHING

(a) Using SST and a hammer, tap out the bushing.
SST 09950-60010 (09951-00420),
09950-70010 (09951-07200)

(b) Coat the inside of a new bushing with molybdenum disulfide lithium base grease.

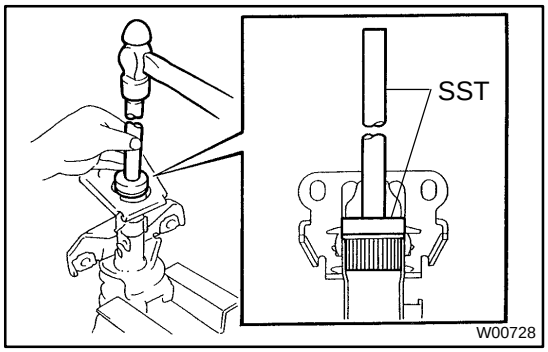

(c) Using SST and a hammer, press in the bushing.
SST 09950-60010 (09951-00460),
09950-70010 (09951-07200)

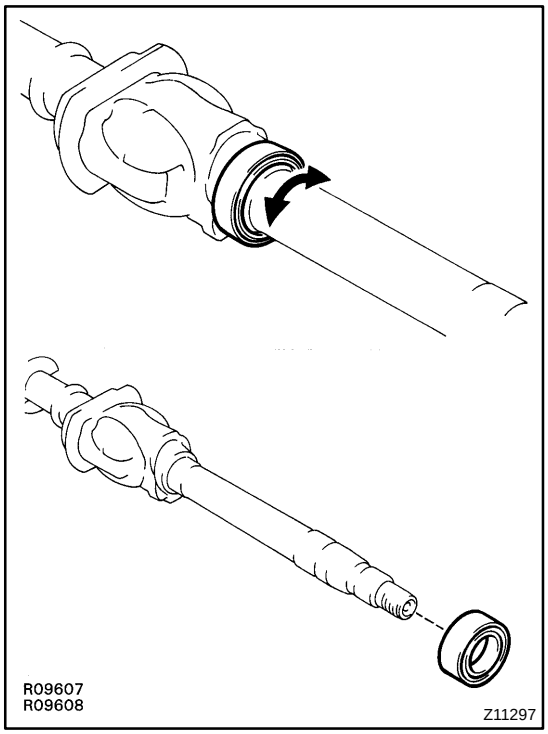

12. INSPECT BEARING

Check the bearing rotation condition and check for abnormal noise.

If the bearing is worn or damaged, replace the bearing.

TROUBLESHOOTING

SA12D-02

PROBLEM SYMPTOMS TABLE

Use the table below to help you find the cause of the problem. The numbers indicate the priority of the likely cause of the problem. Check each part in order. If necessary, replace these parts.

Symptom	Suspect Area	See page
Wanders/pulls	1. Tire (Worn or improperly inflated)	SA-2
	2. Wheel alignment (Incorrect)	SA-4
		SA-7
	3. Steering linkage (Loosen or worn)	-
	4. Hub bearing (Worn)	SA-10
		SA-55
	5. Steering gear (Out of adjustment or broken)	-
	6. Suspension parts (Worn)	-
Bottoming	1. Vehicle (Overloaded)	-
	2. Spring (Weak)	-
	3. Shock absorber (Worn out)	SA-38
		SA-62
Sways/pitches	1. Tire (Worn or improperly inflated)	SA-2
	2. Stabilizer bar (Bent or broken)	-
	3. Shock absorber (Worn out)	SA-38
		SA-62
Front wheel shimmy	1. Tire (Worn or improperly inflated)	SA-2
	2. Wheel (Out of balance)	SA-2
	3. Shock absorber (Worn out)	SA-38
	4. Wheel alignment (Incorrect)	SA-4
	5. Ball joint (Worn)	SA-48
	6. Hub bearing (Worn)	SA-10
	7. Steering linkage (Loosen or worn)	-
	8. Steering gear (Out of adjustment or broken)	-
Abnormal tire wear	1. Tire (Worn or improperly inflated)	SA-2
	2. Wheel (Out of balance)	SA-2
	3. Suspension parts (Worn)	-
	4. Shock absorber (Worn out)	SA-38
		SA-62

CH0E7-02

INSPECTION

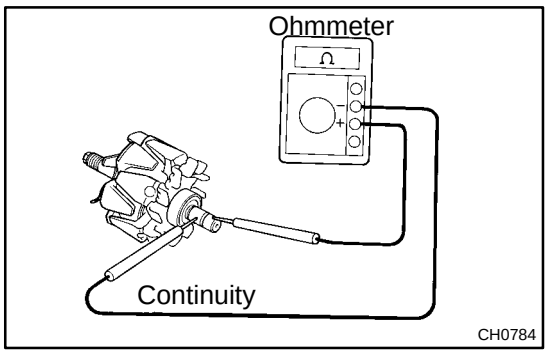

1. INSPECT ROTOR FOR OPEN CIRCUIT

Using an ohmmeter, check that there is continuity between the slip rings.

Standard resistance:
At 20˚C (68˚F): 2.8 - 3.0 Ω

If there is no continuity, replace the rotor.

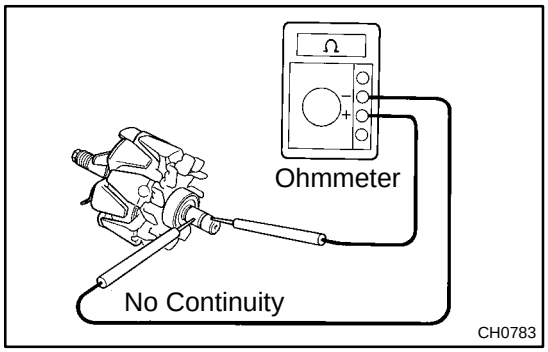

2. INSPECT ROTOR FOR GROUND

Using an ohmmeter, check that there is no continuity between the slip ring and rotor.

If there is continuity, replace the rotor.

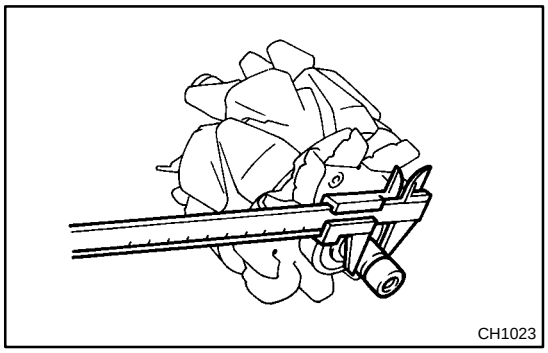

3. INSPECT SLIP RINGS

(a) Check that the slip rings are not rough or scored.

If rough or scored, replace the rotor.

(b) Using a vernier caliper, measure the slip ring diameter.

Standard diameter:
14.2 - 14.4 mm (0.559 - 0.567 in.)
Minimum diameter:
14.0 mm (0.551 in.)

If the diameter is less than minimum, replace the rotor.

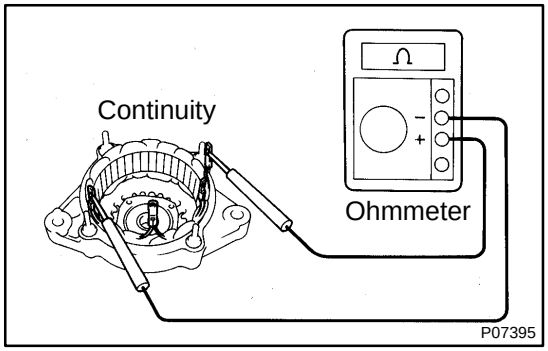

4. INSPECT STATOR FOR OPEN CIRCUIT

Using an ohmmeter, check that there is continuity between the coil leads.

If there is no continuity, replace the drive end frame assembly.

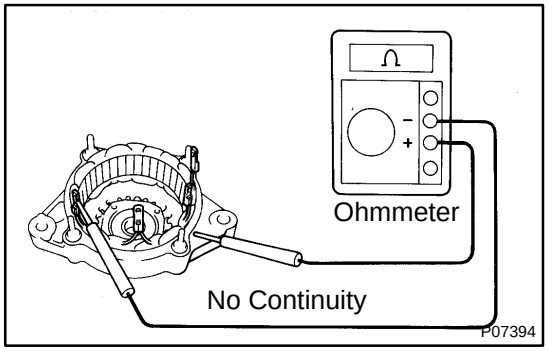

5. INSPECT STATOR FOR GROUND

Using an ohmmeter, check that there is no continuity between the coil lead and drive end frame.

If there is continuity, replace the drive end frame assembly.

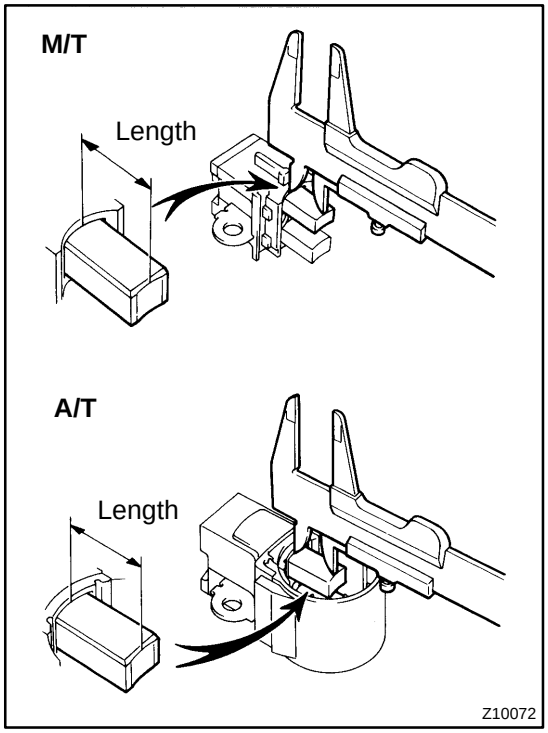

6. INSPECT EXPOSED BRUSH LENGTH

Using vernier calipers, measure the exposed brush length.

Standard exposed length:
10.5 mm (0.413 in.)
Minimum exposed length:
1.5 mm (0.059 in.)

If the exposed length is less than minimum, replace the brushes (M/T) or brush holder assembly (A/T).

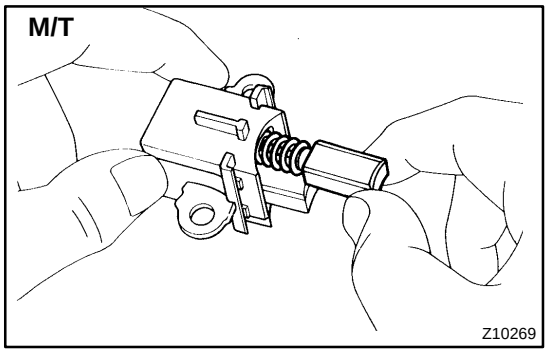

7. M/T:
IF NECESSARY, REPLACE BRUSHES

(a) Unsolder and remove the brush and spring.
(b) Run the wire of a new brush through the hole in the brush holder, and insert the spring and brush into the brush holder.

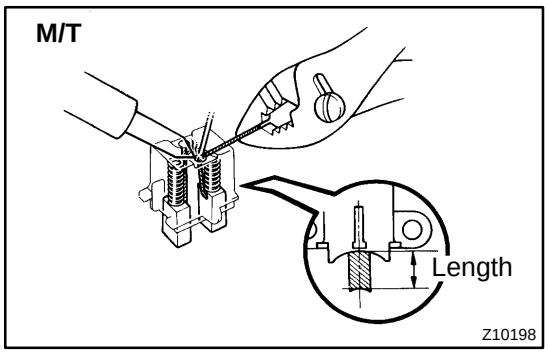

(c) Solder the brush wire to the brush holder at the specified exposed length.
Exposed length:
10.5 mm (0.413 in.)
(d) Check that the brush moves smoothly in the brush holder.
(e) Cut off the excess wire.
(f) Apply insulation paint to the soldered area.

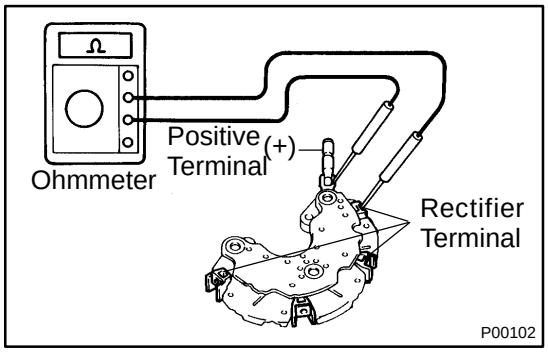

8. INSPECT POSITIVE RECTIFIER

(a) Using an ohmmeter, connect one tester probe to the positive (+) terminal and the other to each rectifier terminal.
(b) Reverse the polarity of the tester probes and repeat step (a).
(c) Check that one shows continuity and the other shows no continuity.

If continuity is not as specified, replace the rectifier holder.

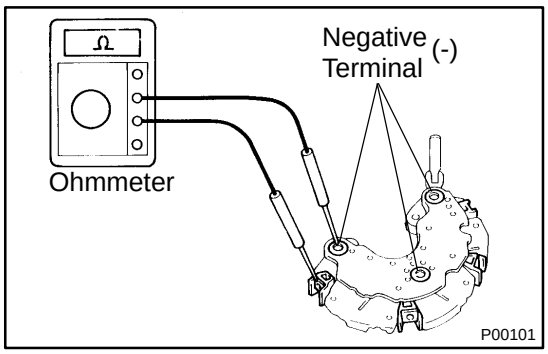

9. INSPECT NEGATIVE RECTIFIER

(a) Using an ohmmeter, connect one tester probe to each negative (-) terminal and the other to each rectifier terminal.

(b) Reverse the polarity of the tester probes and repeat step (a).

(c) Check that one shows continuity and the other shows no continuity.

If continuity is not as specified, replace the rectifier holder.

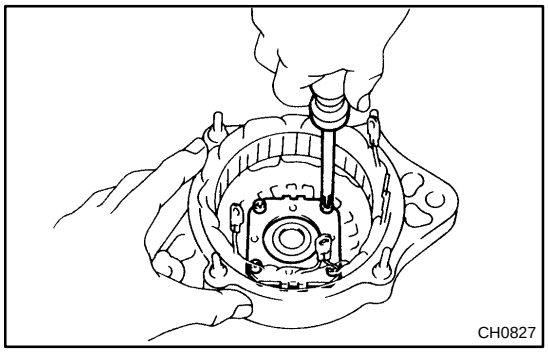

10. INSPECT FRONT BEARING

Check that the bearing is not rough or worn.

11. IF NECESSARY, REPLACE FRONT BEARING

(a) Remove the 4 screws, bearing retainer and bearing.

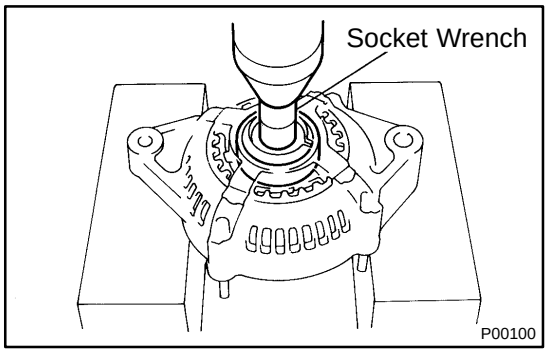

(b) Using a socket wrench and press, press out the bearing.

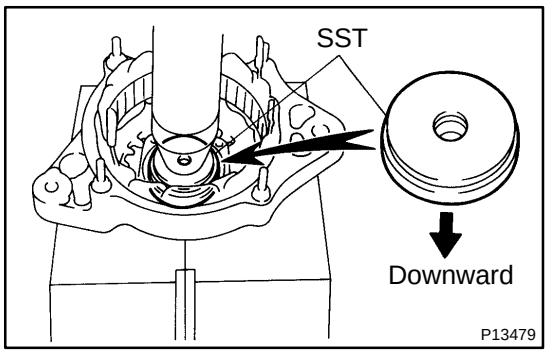

(c) Using SST and a press, press in a new bearing.
SST 09950-60010 (09951-00500)

(d) Install the bearing retainer with the 4 screws.
Torque:
M/T: 2.6 N·m (27 kgf·cm, 23 in.·lbf)
A/T: 3.0 N·m (31 kgf·cm, 26 in.·lbf)

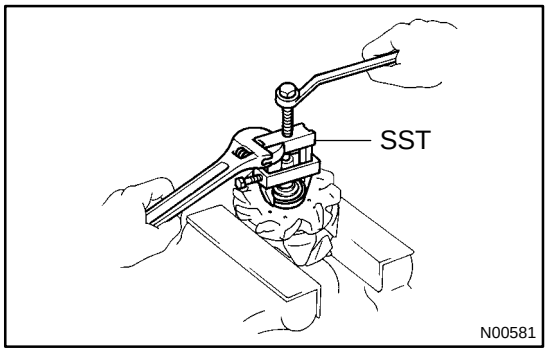

12. INSPECT REAR BEARING

Check that the bearing is not rough or worn.

13. IF NECESSARY, REPLACE REAR BEARING

(a) Using SST, remove the bearing cover (outside) and bearing.
SST 09820-00021

NOTICE:

Be careful not to damage the fan.

(b) Remove the bearing cover (inside).

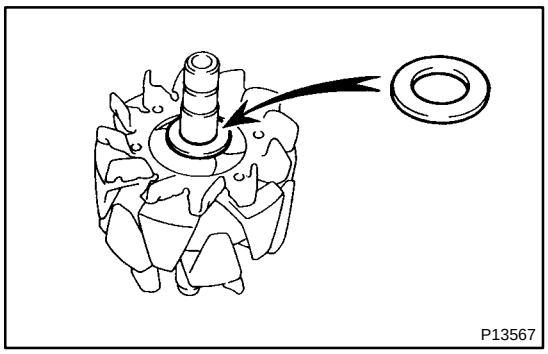

(c) Place the bearing cover (inside) on the rotor.

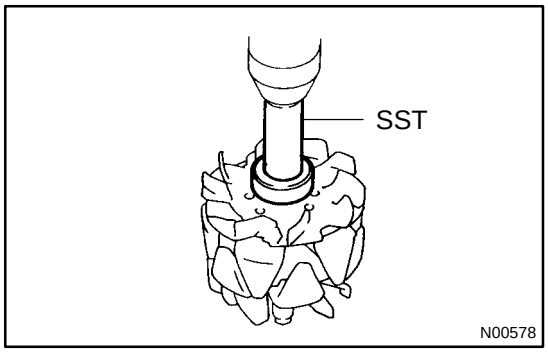

(d) Using SST and a press, press in a new bearing.
SST 09820-00030

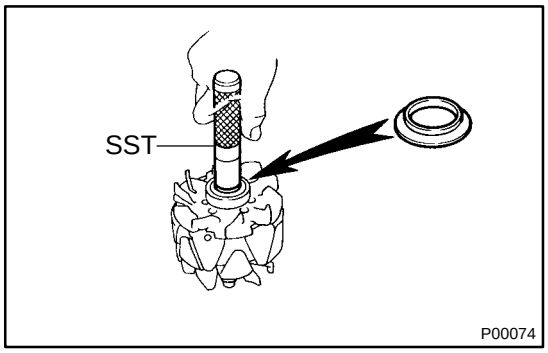

(e) Using SST, push in the bearing cover (outside).
SST 09285-76010

LU0JP-01

INSPECTION

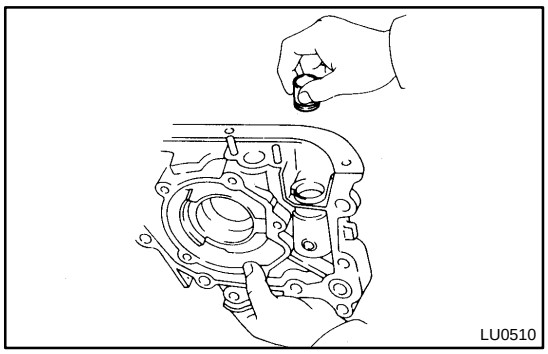
LU0510

1. INSPECT RELIEF VALVE

Coat the valve with engine oil and check that it falls smoothly into the valve hole by its own weight.

If it doesn't, replace the relief valve. If necessary, replace the oil pump assembly.

2. INSPECT DRIVE AND DRIVEN ROTORS

(a) Inspect rotors for body clearance.

Using a thickness gauge, measure the clearance between the driven rotor and body.

Standard body clearance:
0.080 - 0.180 mm (0.0031 - 0.0071 in.)
Maximum body clearance:
0.20 mm (0.0079 in.)

If the body clearance is greater than maximum, replace the rotors as a set. If necessary, replace the oil pump assembly.

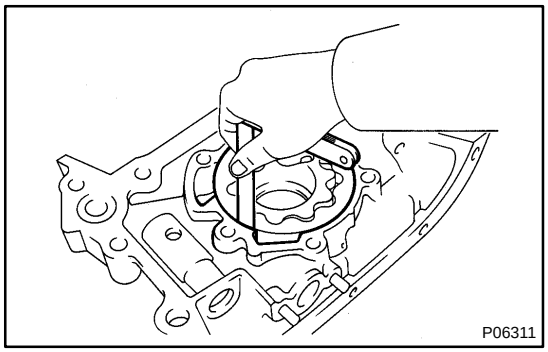
P06311

(b) Inspect rotors for tip clearance.

Using a thickness gauge, measure the clearance between the drive and driven rotor tips.

Standard tip clearance:
0.025 - 0.085 mm (0.0010 - 0.0033 in.)
Maximum tip clearance:
0.35 mm (0.0138 in.)

If the tip clearance is greater than maximum, replace the rotors as a set.

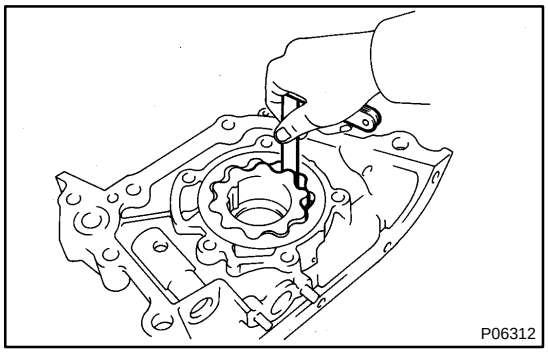
P06312

(c) Inspect rotor side clearance.

Using a thickness gauge and precision straight edge, measure the clearance between the rotors and precision straight edge.

Standard side clearance:
0.025 - 0.085 mm (0.0010 - 0.0033 in.)
Maximum side clearance:
0.10 mm (0.0039 in.)

If the side clearance is greater than maximum, replace the rotors as a set. If necessary, replace the oil pump assembly.

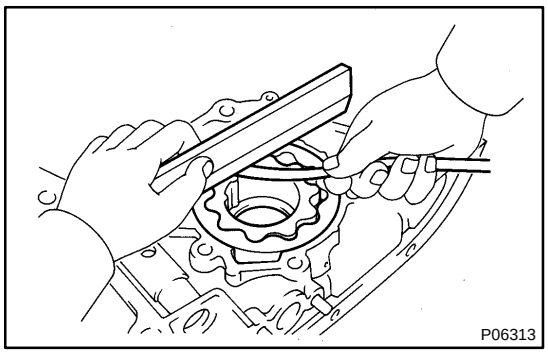
P06313

TIRE AND WHEEL

SA12E-03

INSPECTION

1. INSPECT TIRE

(a) Check the tires for wear and for the proper inflation pressure.

Cold tire inflation pressure

Tire size	Front kPa (kgf/cm^2, psi)	Rear kPa (kgf/cm^2, psi)
P185/70R14 87S 185/70R14 88S	200 (2.0, 29)	200 (2.0, 29)
P205/55R15 87V 205/55R15 87V	230 (2.3, 33)	230 (2.3, 33)

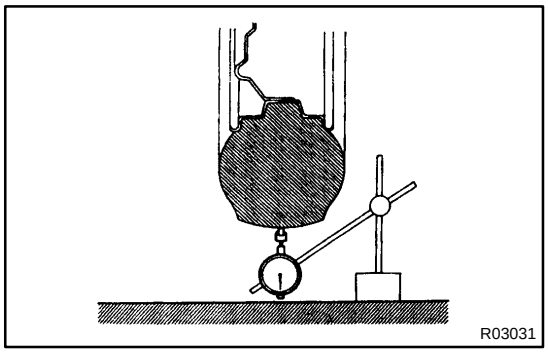

(b) Check the tire runout.

Tire runout: 1.0 mm (0.039 in.) or less

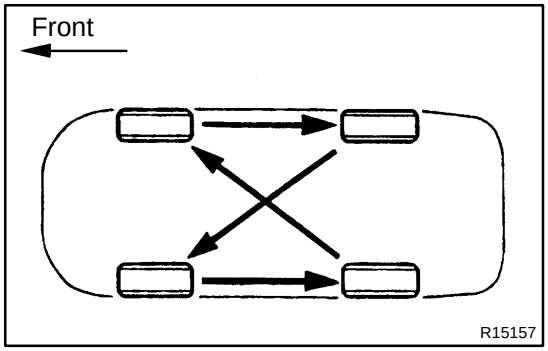

2. ROTATING TIRES

HINT:

See the illustration for where to rotate each tire.

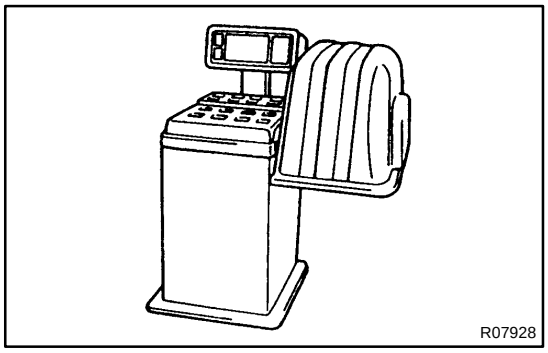

3. INSPECT WHEEL BALANCE

(a) Check and adjust the Off-the-car balance.

(b) If necessary, check and adjust the On-the-car balance.

Unbalance after adjustment: 8.0 g (0.018 lb) or less

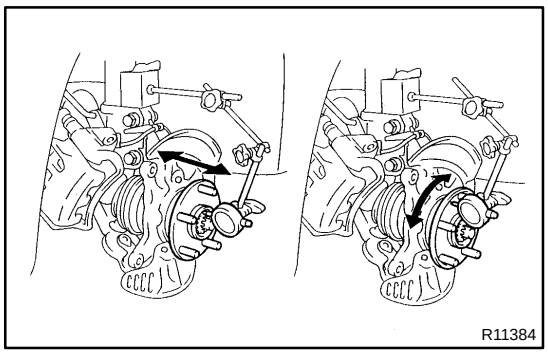

4. CHECK WHEEL BEARING LOOSENESS

(a) Check the backlash in the bearing shaft direction.
Maximum: 0.08 mm (0.0031 in.)

(b) Check the axle hub deviation.
Maximum: 0.07 mm (0.0028 in.)

5. CHECK FRONT SUSPENSION FOR LOOSENESS

6. CHECK STEERING LINKAGE FOR LOOSENESS

7. CHECK BALL JOINT FOR LOOSENESS

8. CHECK SHOCK ABSORBER WORKS PROPERLY

- Check for oil leaks
- Check mounting bushings for wear
- Bounce front and rear of the vehicle

CO0ZP-01

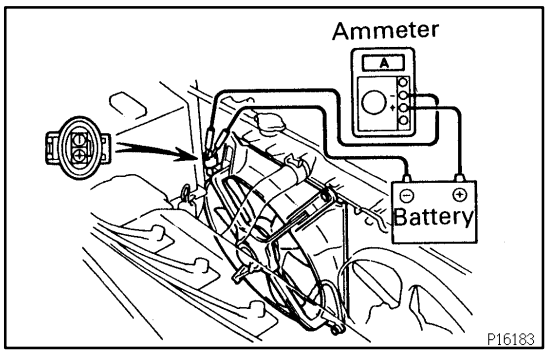

INSPECTION

1. INSPECT NO.1 COOLING FAN

(a) Disconnect the cooling fan connector.

(b) Connect battery and ammeter to the cooling fan connector.

(c) Check that the cooling fan rotates smoothly, and check the reading on the ammeter.

Standard amperage: 5.8 - 7.4 A

(d) Reconnect the cooling fan connector.

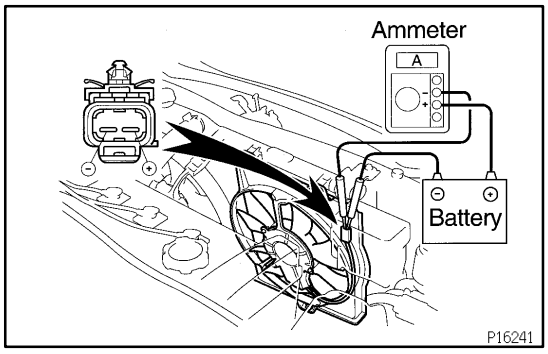

2. INSPECT NO.2 COOLING FAN

(a) Disconnect the cooling fan connector.

(b) Connect battery and ammeter to the cooling fan connector.

(c) Check that the cooling fan rotates smoothly, and check the reading on the ammeter.

Standard amperage: 5.7 - 7.7 A

(d) Reconnect the cooling fan connector.

BO1EE-03

INSTALLATION

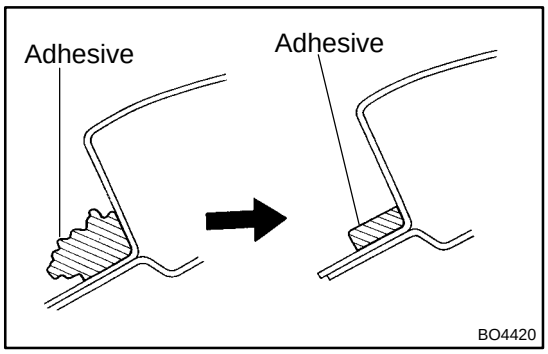

1. CLEAN AND SHAPE CONTACT SURFACE OF BODY

(a) Using a knife, cut away any rough areas on the body.

HINT:

Leave as much of the adhesive on the body as possible.

(b) Clean the cutting surface of the adhesive with a piece of shop rag saturated in cleaner.

HINT:

Even if all the adhesive has been removed, clean the body.

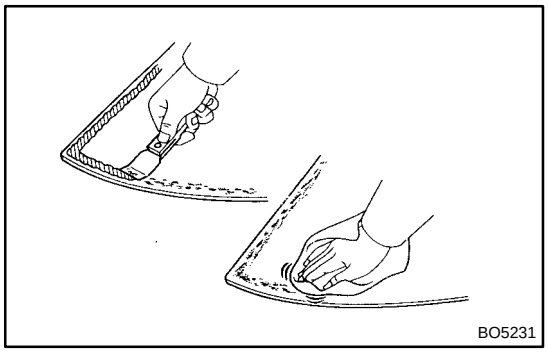

2. CLEAN REMOVED GLASS

Using a scraper, remove the adhesive sticking to the glass.

NOTICE:

Do not touch the glass after cleaning it.

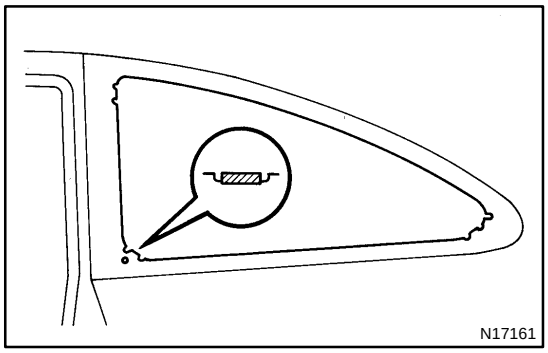

3. REPLACE SPACER

(a) Remove the damaged spacers.

(b) Cut off the old adhesive around the spacers installation area.

NOTICE:

Be careful not to damage the glass.

(c) Clean the installation area.

(d) Attach the spacers to the glass with the ceramic notch on the glass aligned with the spacers, as shown in the illustration.

4. POSITION GLASS

(a) Place the glass in correct position.

(b) Check that all contacting parts of the glass rim are perfectly even.

(c) Place reference marks between the glass and body.

(d) Remove the glass.

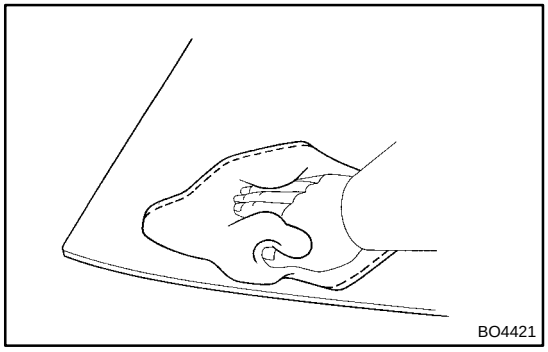

5. CLEAN CONTACT SURFACE OF GLASS

Using a cleaner, clean the contact surface which is black-colored area around the entire glass rim.

NOTICE:

Do not touch the glass surface after cleaning it.

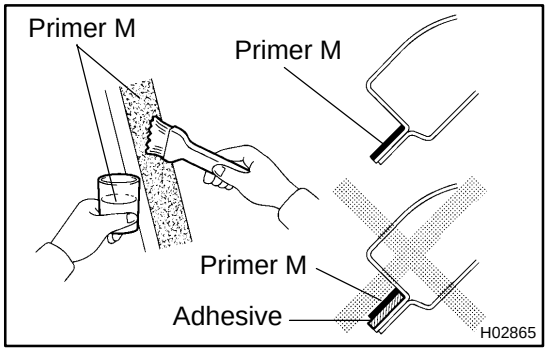

6. COAT CONTACT SURFACE OF BODY WITH PRIMER "M"

Using a brush, coat Primer M to the exposed part of body on the vehicle side.

NOTICE:

- **Let the primer coating dry for 3 minutes or more.**
- **Do not coat Primer M to the adhesive.**
- **Do not keep any of the opened Primer M for later use.**

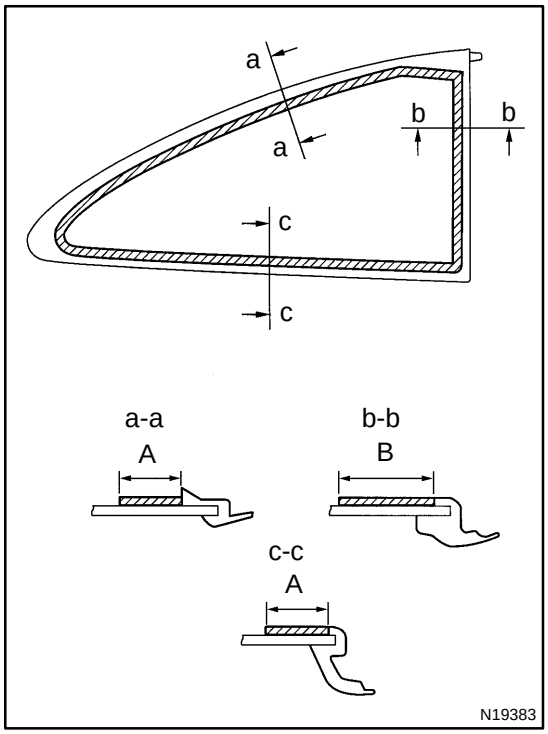

7. COAT CONTACT SURFACE OF GLASS WITH PRIMER "G"

(a) Using a brush or sponge, coat the edge of the glass and contact surface with Primer G.

(b) When the primer is coated wrongly to the area other than the specified, wipe it off with a clean shop rag before the primer dries.

NOTICE:

- **Let the primer coating dry for 3 minutes or more.**
- **Do not keep any of the opened Primer G for later use.**

A: 15 mm (0.59 in.)

B: 30 mm (1.18 in.)

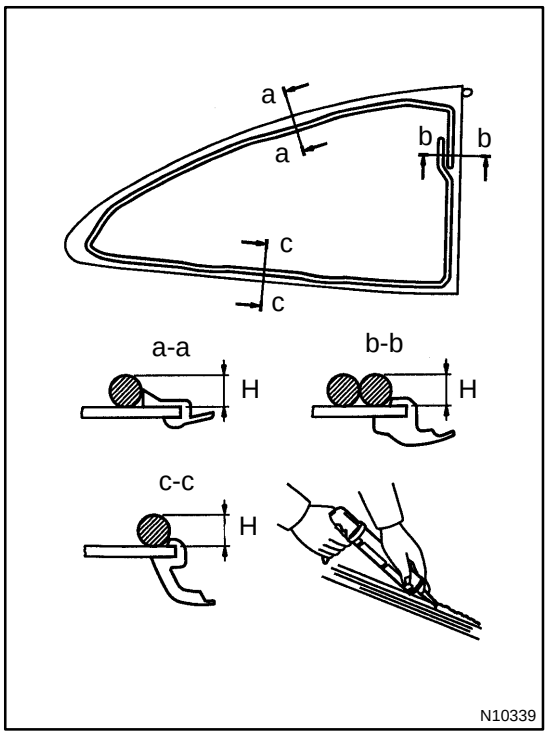

8. APPLY ADHESIVE

(a) Cut off the tip of the cartridge nozzle. (Fill the cartridge with adhesive.)

(b) Load the cartridge into the sealer gun.

(c) Coat the glass with adhesive, as shown in the illustration.

H: 12 mm (0.47 in.)

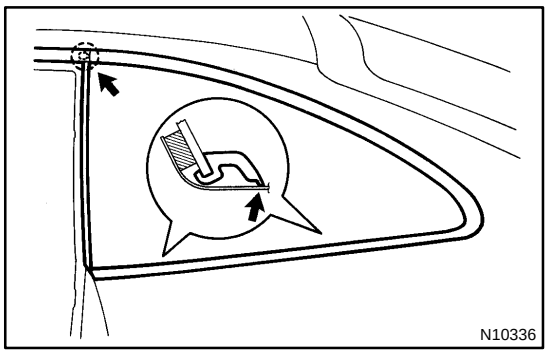

9. INSTALL GLASS

(a) Install the glass to the body.

HINT:

First fit the glass to the moulding and then to the body panel, as shown in the illustration.

(b) Use adhesive tape to keep the glass tight against the body.

10. INSPECT FOR LEAKS AND REPAIR

(a) Conduct a leak test after the hardening time has elapse

(b) Seal any leak with sealant.

Part No. 08833-00030 or equivalent.

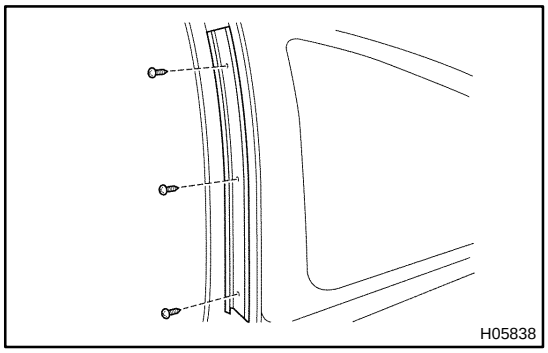

11. INSTALL ROOF SIDE RAIL WEATHERSTRIP RETAINER

Install the roof side rail weatherstrip retainer with the 3 screws.

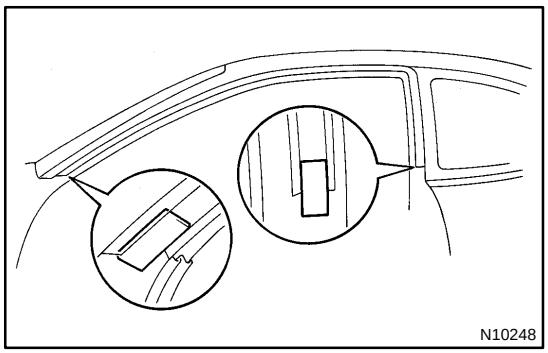

12. INSTALL OUTSIDE GARNISH SEAL

Install the outside garnish seal to the retainer as shown in the illustration.

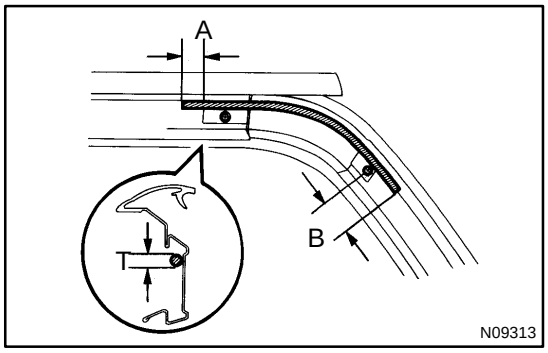

13. APPLY SEAL PACKING

Apply seal packing to the moulding and retainer, as shown in the illustration.

A: 10 mm (0.93 in.) or more

B: 20 mm (0.79 in.) or more

T: 3.0 mm (0.12 in.) or more

Part No. 08826-00080 or equivalent.

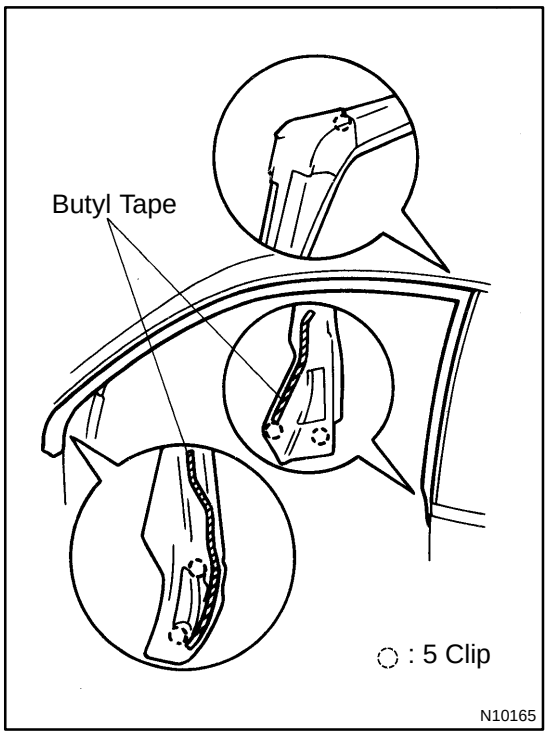

14. INSTALL ROOF SIDE RAIL WEATHERSTRIP

(a) Attach the butyl tape to the weatherstrip, as shown in the illustration.

(b) Install the rear side of the weatherstrip.

15. INSTALL ROOF SIDE INNER GARNISH

(a) Install the rear seat outer belt through the roof side inner garnish.

(b) Install the roof side inner garnish with the clip.

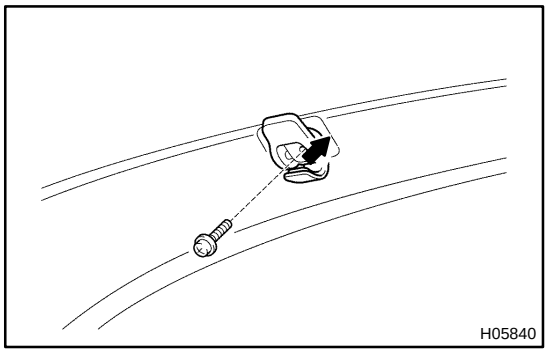

(c) Install the coat hook with a screw.

(d) Install the rear seat outer belt floor anchor bolt.
Torque: 43 N·m (440 kgf·cm, 32 ft·lbf)

(e) Install the front seat outer belt shoulder anchor bolt.
Torque: 43 N·m (440 kgf·cm, 32 ft·lbf)

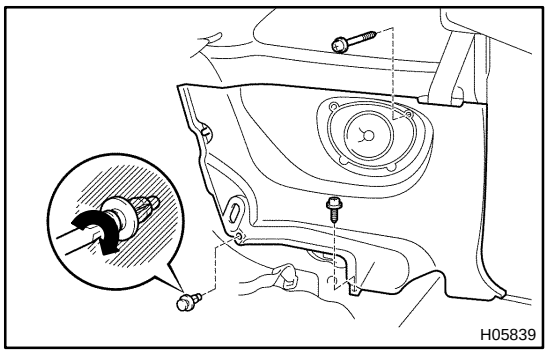

16. INSTALL QUARTER TRIM PANEL

(a) Install the quarter trim panel, with the 2 screws and clip.

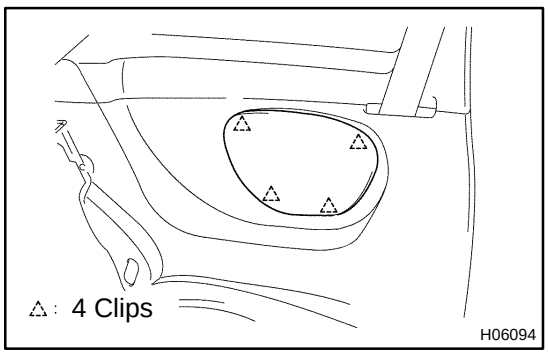

(b) Install the speaker grille.

17. INSTALL THESE PARTS:

(a) Rear seatback lock striker
Torque: 19 N·m (195 kgf·cm, 14 ft·lbf)

(b) Rear seatback hinge
Torque: 8.0 N·m (82 kgf·cm, 71 in.·lbf)

(c) Room partition board LH and RH

(d) Package tray trim panel

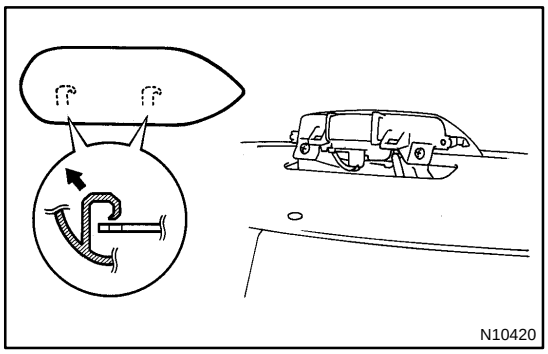

(e) High-mounted stop light and cover

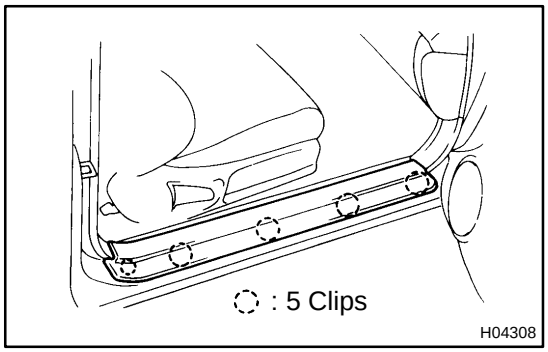

(f) Front door scuff inside plate

(g) Rear seat
(See page BO-126)

SR0JU-03

INSTALLATION

1. INSTALL STEERING COLUMN ASSEMBLY

(a) Torque the 4 column assembly set nuts and bolt.
Torque:
Nut: 25 N·m (260 kgf·cm, 19 ft·lbf)
Bolt: 14 N·m (145 kgf·cm, 11 ft·lbf)

(b) Connect the connectors.

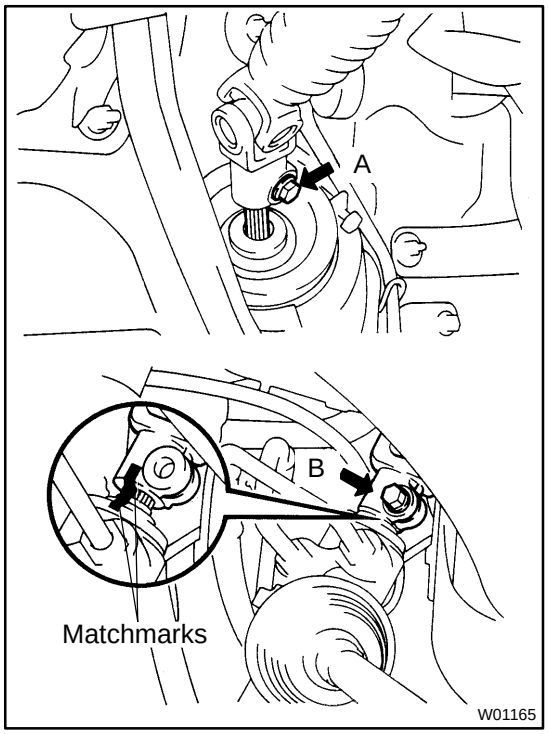

2. INSTALL INTERMEDIATE NO.2 SHAFT

Temporarily tighten the bolt A.

3. CONNECT INTERMEDIATE NO.2 SHAFT

(a) Align the matchmarks on the intermediate No.2 shaft and control valve shaft.

(b) Torque the bolt B.
Torque: 35 N·m (360 kgf·cm, 26 ft·lbf)

(c) Torque the bolt A.
Torque: 35 N·m (360 kgf·cm, 26 ft·lbf)

4. INSTALL NO.2 HEATER TO REGISTER DUCT

Install the clip.

5. INSTALL FINISH PANEL

Tighten the 4 bolts.

6. INSTALL FINISH LOWER NO.1 PANEL

(a) Tighten the 5 panel set screws.

(b) Connect the hood lock release lever with the 2 screws.

(c) Install the fuse box opening cover.

7. INSTALL CLUSTER FINISH LOWER PANEL

8. w/ Airbag:
INSTALL SPIRAL CABLE
(See page BE-14)

9. INSTALL COMBINATION SWITCH

(a) Tighten the 4 screws.

(b) w/ Airbag:
Connect the airbag connector.

(c) Connect the connectors.

10. INSTALL UPPER AND LOWER COLUMN COVERS

Tighten the 3 screws.

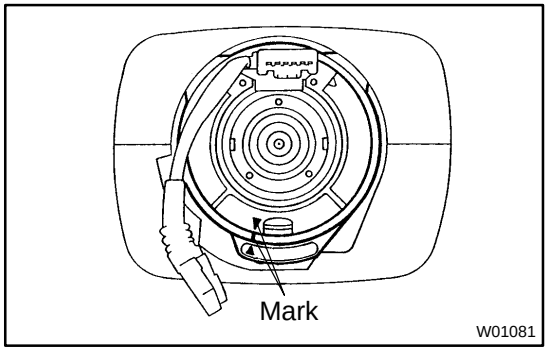

11. CENTER SPIRAL CABLE

(a) Check that the front wheels are facing straight ahead.

(b) Turn the cable counterclockwise by hand until it becomes harder to turn the cable.

(c) Then rotate the cable clockwise about 2.5 turns to align the mark.

HINT:
The cable will rotate about 2.5 turns to either left or right of the center.

12. INSTALL STEERING WHEEL

(a) Align the matchmarks on the wheel and main shaft.

(b) Torque the wheel set nut.

Torque: 34 N·m (350 kgf·cm, 25 ft·lbf)

(c) Connect the connector.

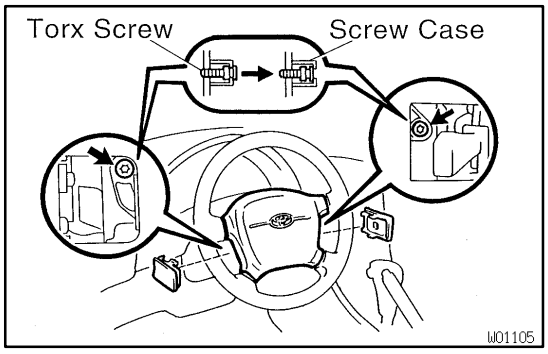

13. w/ Airbag:

INSTALL STEERING WHEEL PAD

NOTICE:

Make sure the wheel pad is installed to the specified torque.If the wheel pad has been dropped, or there are cracks, dents or other defects in the case or connector, replace the wheel pad with a new one.When installing the wheel pad, take care that the wirings do not interfere with other parts and are not pinched between other parts.

(a) Connect the airbag connector.

(b) Install the wheel pad after confirming that the circumference groove of the torx screws is caught on the screw case.

(c) Using a torx socket wrench, torque the 2 screws.

Torque: 8.8 N·m (90 kgf·cm, 78 in.·lbf)

14. w/o Airbag:

INSTALL STEERING WHEEL PAD

Install the pad with the screw.

15. CHECK STEERING WHEEL CENTER POINT

SR0K0-03

INSTALLATION

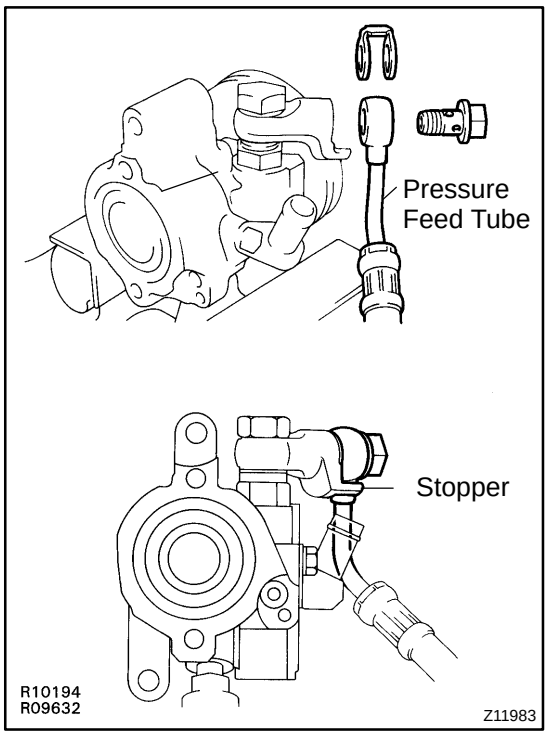

1. INSTALL PRESSURE FEED TUBE

Torque the union bolt with a new gasket.

HINT:

Make sure the stopper of the pressure feed No.2 tube is touching the tube, as shown, then torque the union bolt.

Torque: 52 N·m (525 kgf·cm, 38 ft·lbf)

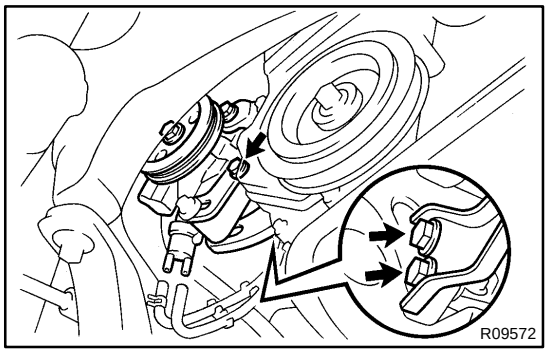

2. INSTALL PS VANE PUMP ASSEMBLY WITH PRESSURE FEED TUBE AND 2 BRACKETS

(a) Temporarily install the 2 brackets to the pump assembly with the bolt.

(b) Torque the 3 bolts.

Torque: 43 N·m (440 kgf·cm, 32 ft·lbf)

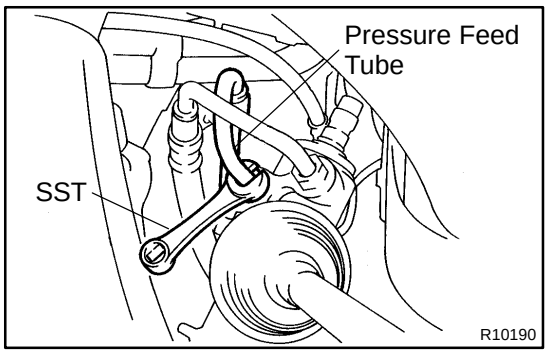

3. CONNECT PRESSURE FEED TUBE

(a) Install the 3 tube clamp brackets and grommets.

(b) Tighten the 2 tube clamp bracket set bolts.

(c) Using SST, connect the tube.

SST 09631-22020

Torque: 36 N·m (365 kgf·cm, 26 ft·lbf)

HINT:

- Use a torque wrench with a fulcrum length of 300 mm (11.81 in.).
- This torque value is effective in case that SST is parallel to a torque wrench.

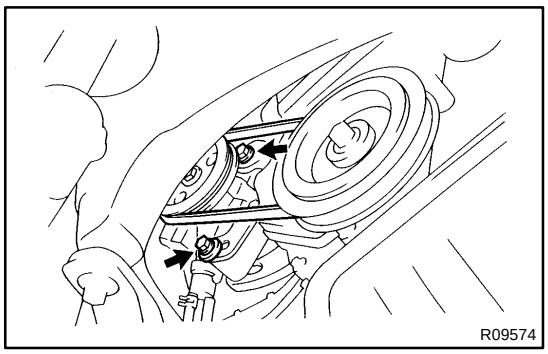

4. INSTALL DRIVE BELT

(a) Adjust drive belt tension.
(See page SR-3)

(b) Torque the 2 bolts.
Torque: 43 N·m (440 kgf·cm, 32 ft·lbf)

5. CONNECT RETURN HOSE

6. CONNECT 2 VACUUM HOSES

7. INSTALL DRIVE SHAFT RH
(See page SA-34)

8. w/ ABS:
CONNECT ABS SPEED SENSOR WIRING HARNESS CLAMP
Tighten the bolt.

9. INSTALL ENGINE UNDER COVER RH
Tighten the 9 bolts.

10. BLEED POWER STEERING SYSTEM
(See page SR-4)

11. w/ ABS:
CHECK ABS SPEED SENSOR SIGNAL
(See page DI-308)

FUEL TANK AND LINE

SF0V9-03

COMPONENTS

- **Always use new gaskets when replacing the fuel tank or component parts.**
- **Apply the proper torque to all parts tightened.**

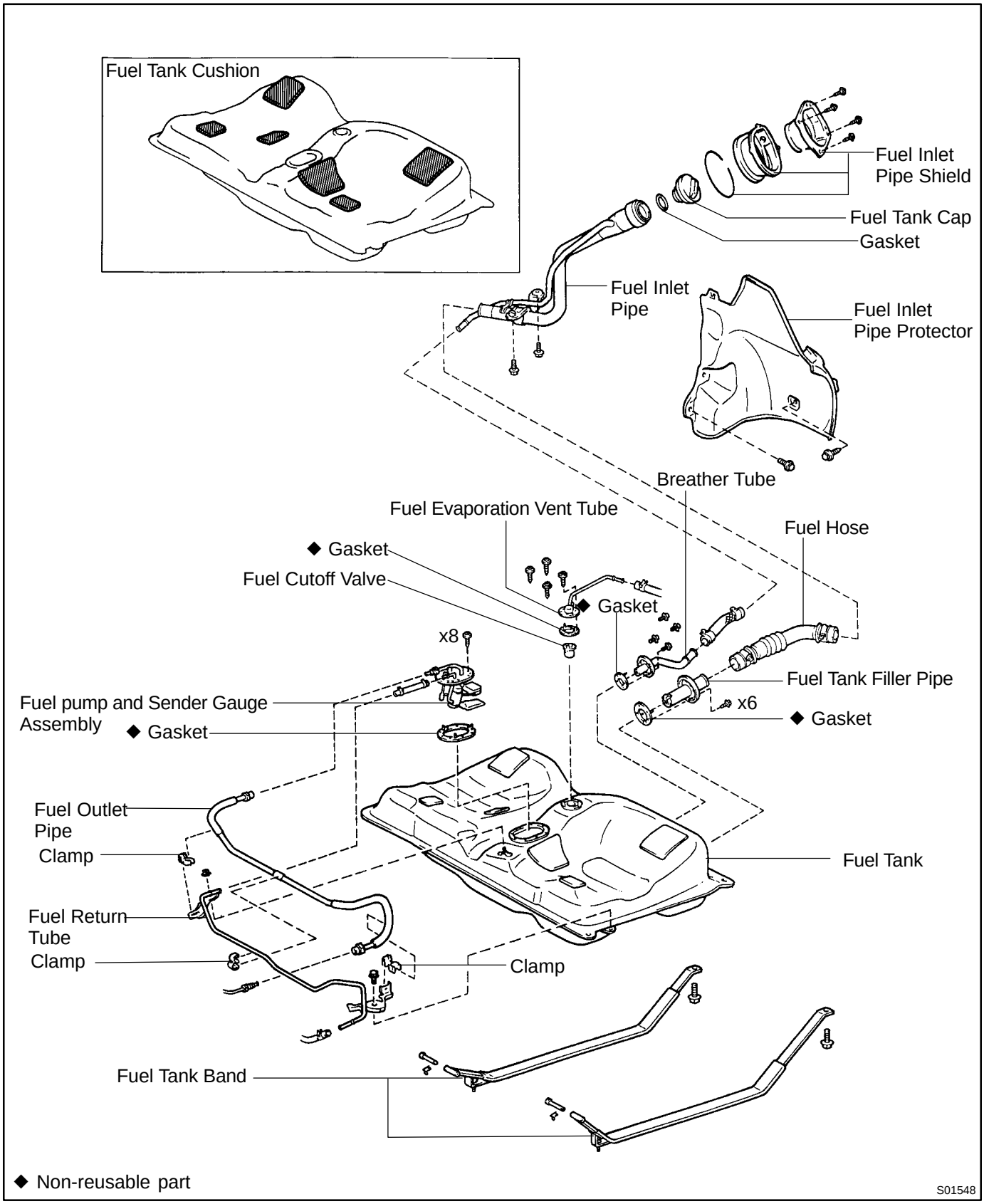

CO192-01

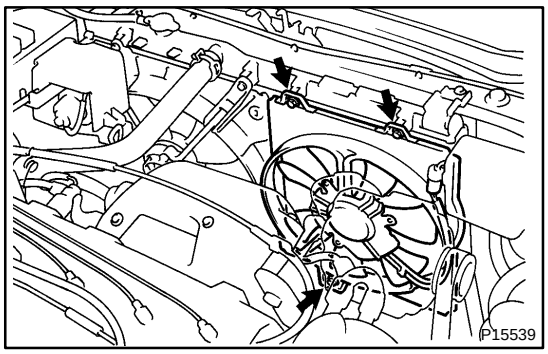

INSTALLATION

1. INSTALL NO. 2 COOLING FAN

(a) Install the cooling fan with the 3 bolts.
Torque: 5.0 N·m (50 kgf·cm, 43 in.·lbf)

(b) Connect the cooling fan connector.

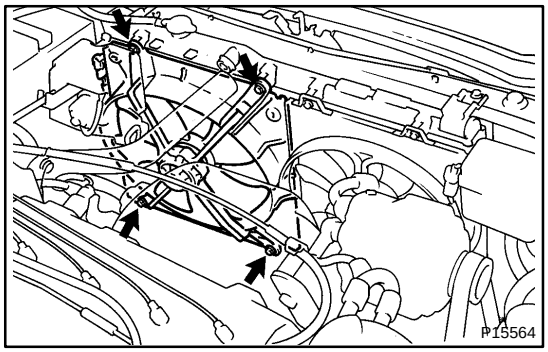

2. INSTALL NO. 1 COOLING FAN

(a) Install the cooling fan with the 4 bolts.
Torque: 5.0 N·m (50 kgf·cm, 43 in.·lbf)

(b) Connect the cooling fan connector.

(c) Install the wire to the clamp on the cooling fan.

(d) Connect the upper radiator hose to the radiator.

3. CANADA only:
INSTALL RELAY BOX (FOR DAYTIME RUNNING LIGHT SYSTEM)

Install the relay box with the 2 bolts.

4. FILL WITH ENGINE COOLANT

5. START ENGINE AND CHECK FOR COOLANT LEAKS

CO0Z8-01

INSTALLATION

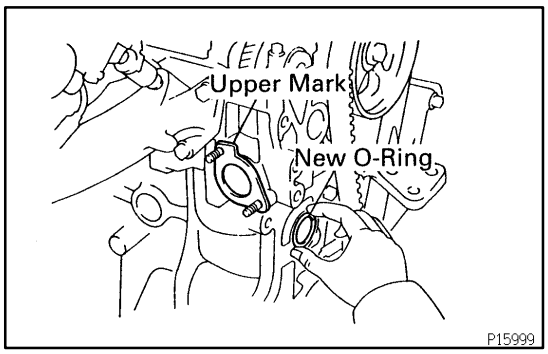

1. ASSEMBLE WATER PUMP AND NO.2 WATER INLET

2. INSTALL WATER PUMP AND NO.2 WATER INLET

(a) Place a new O-ring in position on the cylinder block.

(b) Place a new gasket in position on the cylinder head so that the upper mark is toward the upper side.

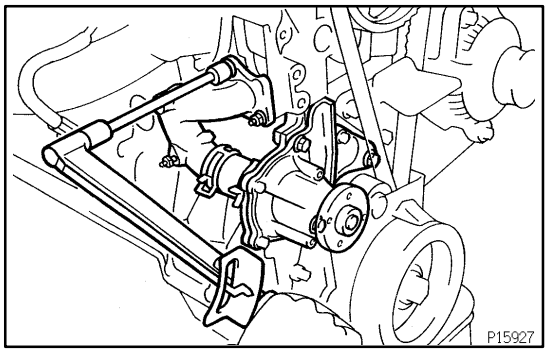

(c) Temporarily install the water pump and No.2 water inlet with the 3 bolts and 2 nuts.

(d) Tighten the bolts and nuts.

Torque:
Bolt: 14 N·m (145 kgf·cm, 11 ft·lbf)
Nut: 15 N·m (150 kgf·cm, 11 ft·lbf)

3. INSTALL OIL DIPSTICK GUIDE AND DIPSTICK

(a) Install a new O-ring on the oil dipstick guide.

(b) Apply small amount of engine oil to the O-ring.

(c) Push in the oil dipstick guide with the O-ring.

(d) Install the mounting bolt.

Torque: 9.3 N·m (95 kgf·cm, 82 in.·lbf)

(e) Connect the crankshaft position sensor connector to the dipstick guide.

4. CONNECT ENGINE WIRE

5. INSTALL TIMING BELT COVERS

6. INSTALL CYLINDER HEAD COVER
(See page EM-44)

7. INSTALL WATER PUMP PULLEY

8. INSTALL ENGINE MOUNTING CENTER MEMBER
Torque: 80 N·m (815 kgf·cm, 59 ft·lbf)

9. INSTALL PS DRIVE BELT ADJUSTING STRUT
Torque: 39.2 N·m (400 kgf·cm, 29 ft·lbf)

10. INSTALL PS PUMP DRIVE BELT
(See page EM-65)

11. REFILL WITH COOLANT

12. START ENGINE AND CHECK FOR LEAKS

CO0ZC-01

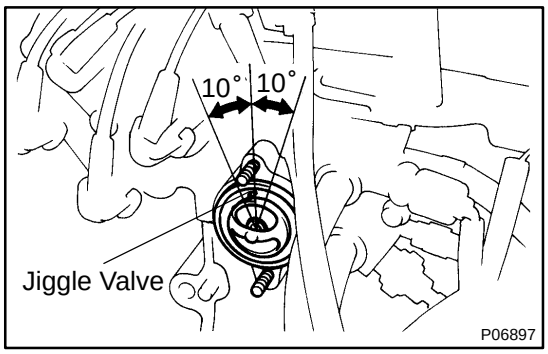

INSTALLATION

1. PLACE THERMOSTAT IN WATER INLET HOUSING

(a) Install a new gasket into the thermostat.

(b) Align the thermostat jiggle valve with the upper side of the stud bolt, and insert the thermostat in the water inlet housing.

HINT:

The jiggle valve may be set within 10° of either side of the prescribed position.

2. INSTALL WATER INLET

Install the water inlet with the 2 nuts.

Torque: 9.3 N·m (95 kgf·cm, 82 in.·lbf)

3. CONNECT ENGINE COOLANT TEMPERATURE SWITCH CONNECTOR

4. FILL COOLING SYSTEM WITH ENGINE COOLANT

5. START ENGINE AND CHECK FOR COOLANT LEAKS

AC2SU-01

INSTALLATION

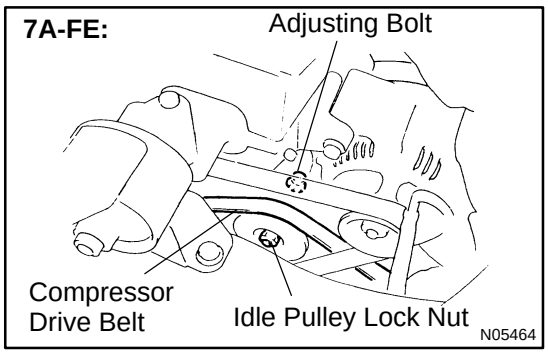

1. 7A-FE:

INSTALL DRIVE BELT

(a) Install the compressor drive belt and tighten the adjusting bolt.

(b) Tighten the idle pulley lock nut.

Torque: 39 N·m (400 kgf·cm, 29 ft·lbf)

(c) Install the alternator drive belt.

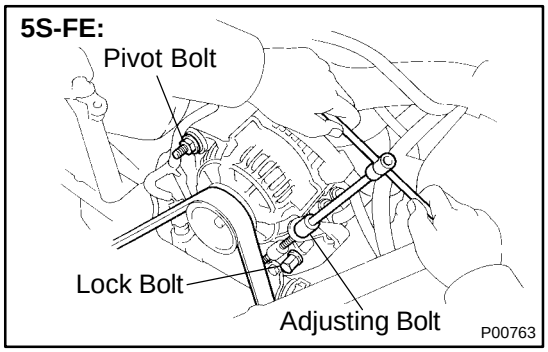

2. 5S-FE:

INSTALL DRIVE BELT

(a) Install the drive belt.

(b) Using a adjusting bolt, adjust drive belt tension.

New belt: 175 ± 5 lbf

Used belt: 110 ± 22 lbf

(c) Tighten the adjusting lock bolt.

Torque: 19 N·m (185 kgf·cm, 14 ft·lbf)

(d) Tighten the pivot bolt.

Torque: 54 N·m (530 kgf·cm, 40 ft·lbf)

IG08C-02

INSTALLATION

1. INSTALL CRANKSHAFT POSITION SENSOR

(a) Install the sensor with the bolt.
Torque: 9.5 N·m (97 kgf·cm, 84 in.·lbf)

(b) Install the sensor connector to the generator drive belt adjusting bar.

(c) Connect the sensor connector.

2. INSTALL NO.1 TIMING BELT COVER
(See page EM-19)

EM0JD-03

INSTALLATION

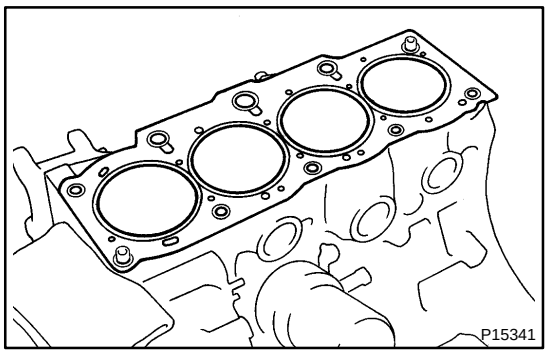

1. PLACE CYLINDER HEAD ON CYLINDER BLOCK

(a) Place a new cylinder head gasket on the cylinder block.

NOTICE:

Be careful of the installation direction.

(b) Place the cylinder head on the cylinder head gasket.

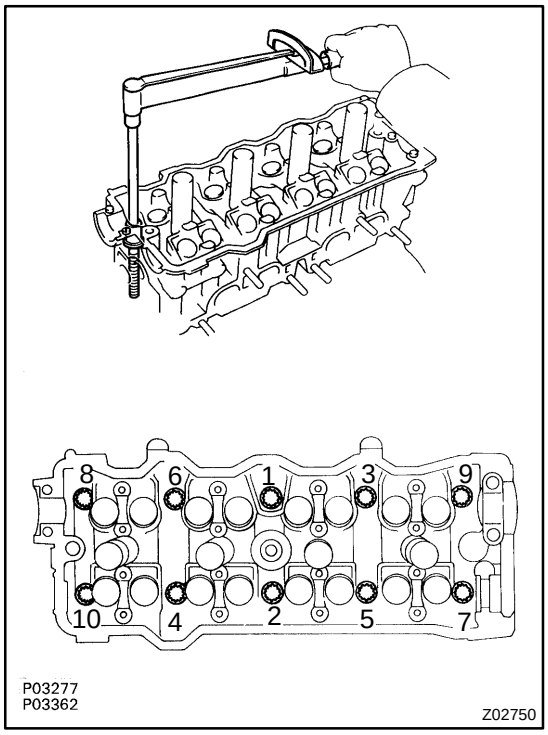

2. INSTALL CYLINDER HEAD BODTS

HINT:

- The cylinder head bolts are tightened in 2 progressive steps (steps (b) and (d)).
- If any cylinder head bolt is broken or deformed, replace it.

(a) Apply a light coat of engine oil on the threads and under the heads of the cylinder head bolts.

(b) Install and uniformly tighten the 10 cylinder head bolts and plate washers in several passes, in the sequence shown.

Torque: 49 N·m (500 kgf·cm, 36 ft·lbf)

If any one of the cylinder head bolts does not meet the torque specification, replace the cylinder head bolt.

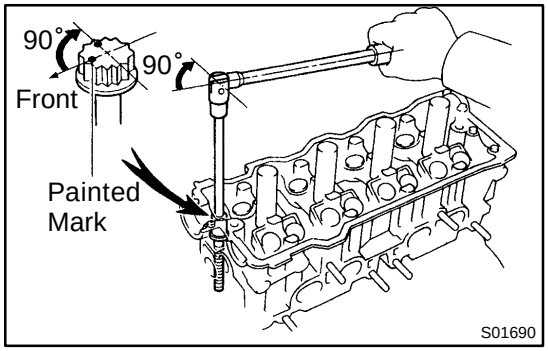

(c) Mark the front of the cylinder head bolt head with paint.

(d) Retighten the cylinder head bolts 90° in the numerical order shown.

(e) Check that the painted mark is now at a 90° angle to the front.

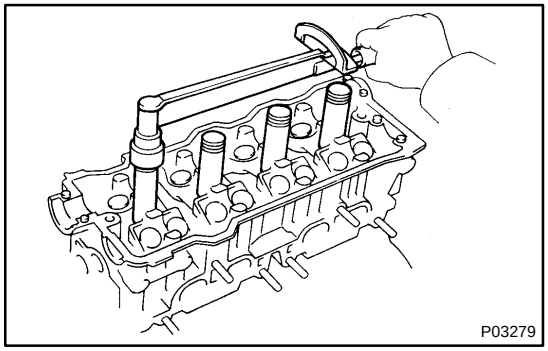

3. INSTALL SPARK PLUG TUBES

(a) Clean the cylinder head tube holes of any residual adhesive, oil or foreign particles. Remove any oil with kerosene or gasoline.

(b) Screw the threads of the spark plug tube coated with adhesive into the cylinder head.

(c) Using the spark plug tube nut and a 30 mm socket wrench, tighten the spark plug tubes.

Torque: 39 N·m (400 kgf·cm, 29 ft·lbf)

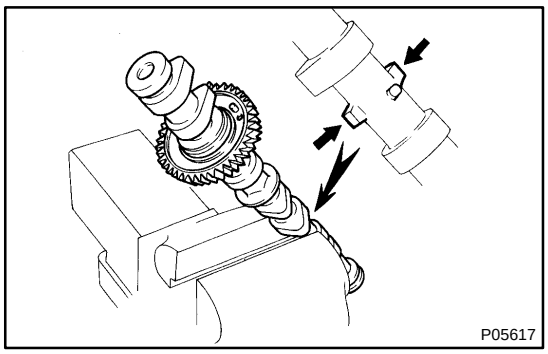

4. ASSEMBLE EXHAUST CAMSHAFT

(a) Mount the camshaft in a vise.

NOTICE:

Be careful not to damage the camshaft.

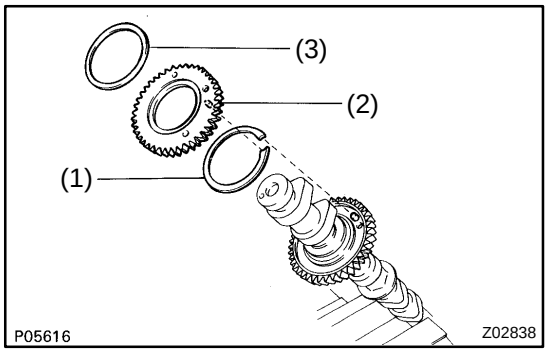

(b) Install these parts:
- (1) Camshaft gear spring
- (2) Camshaft sub-gear
- (3) Wave washer

HINT:

Align the pins on the gears with the spring ends.

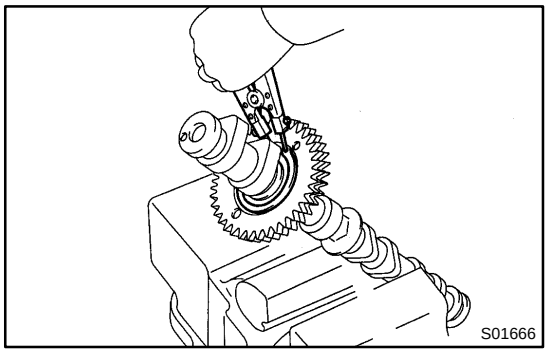

(c) Using snap ring pliers, install the snap ring.

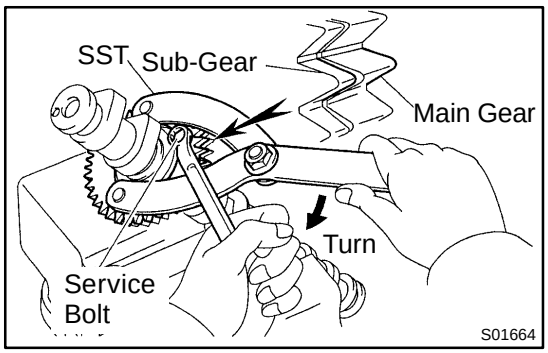

(d) Using SST, align the holes of the camshaft drive gear and sub-gear by turning camshaft sub-gear clockwise, and install a service bolt.

SST 09960-10010 (09962-01000, 09963-00500)

(e) Align the gear teeth of the drive gear and sub-gear, and tighten the service bolt.

5. INSTALL CAMSHAFTS

NOTICE:

Since the thrust clearance of the camshaft is small, the camshaft must be kept level while it is being installed. If the camshaft is not kept level, the portion of the cylinder head receiving the shaft thrust may crack or be damaged, causing the camshaft to seize or break. To avoid this, the following steps should be carried out.

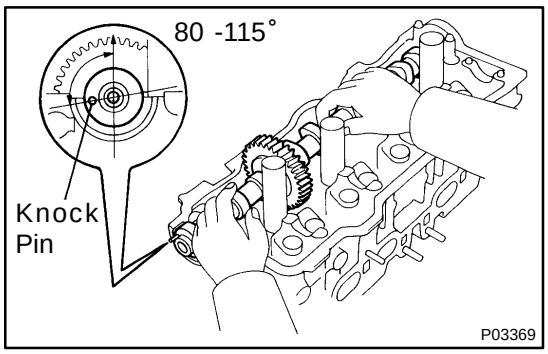

(a) Install the intake camshaft.
(1) Apply MP grease to the thrust portion of the camshaft.
(2) Place the intake camshaft at 80 - 115° BTDC of camshaft angle on the cylinder head.

HINT:
The above angle arrows the No.1 and No.3 cylinder cam lobes of the intake camshaft to push their valve lifters evenly.

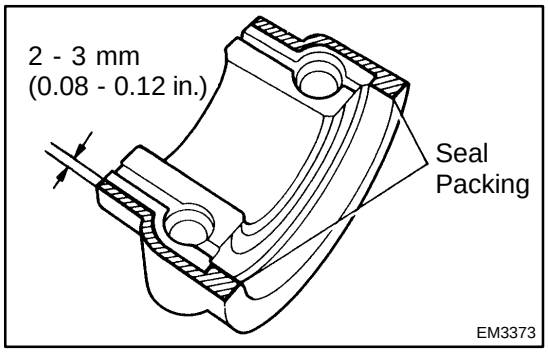

(3) Apply seal packing to the No.1 bearing cap as shown.

Seal packing:
Part No. 08826-00080 or equivalent

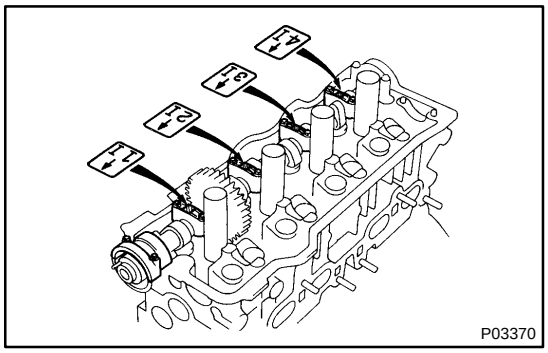

(4) Install the bearing caps in their proper locations.

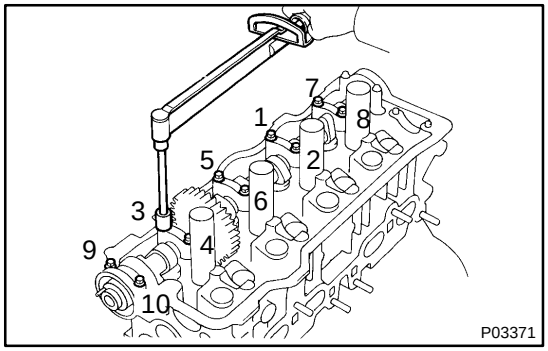

(5) Apply a light coat of engine oil on the threads and under the heads of the bearing cap bolts.
(6) Install and uniformly tighten the 10 bearing cap bolts in several passes, in the sequence shown.

Torque: 19 N·m (190 kgf·cm, 14 ft·lbf)

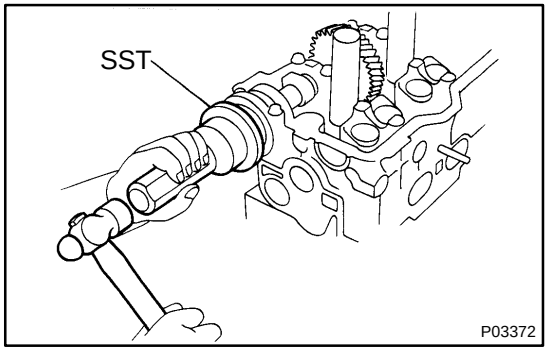

(7) Apply MP grease to a new oil seal lip.
(8) Using SST and a hammer, tap in the oil seal.

SST 09223-4601 1

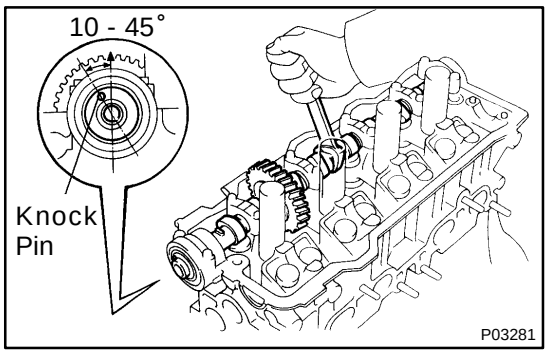

(b) Install the exhaust camshaft.

(1) Set the knock pin of the intake camshaft at 10 - 45° BTDC of camshaft angle.

HINT:

The above angle allows the No.2 and No.4 cylinder cam lobes of the exhaust camshaft to push their valve lifters evenly.

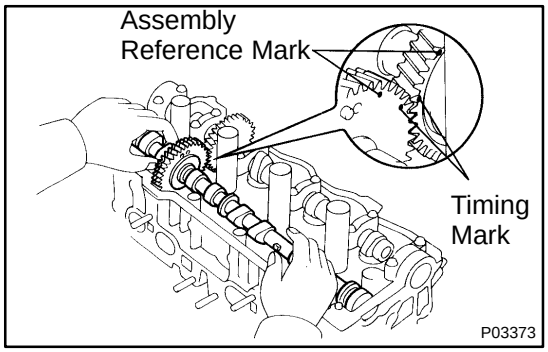

(2) Apply MP grease to the thrust portion of the camshaft.

(3) Engage the exhaust camshaft gear to the intake camshaft gear by matching the timing marks on each gear.

(4) Roll down the exhaust camshaft onto the bearing journals while engaging gears with each other.

NOTICE:

There are also assembly reference marks on each gear as shown in the illustration. Do not use these marks.

(5) Turn the intake camshaft clockwise or counterclockwise a little until the exhaust camshaft sits in the bearing journals evenly without rocking the camshaft on the bearing journals.

NOTICE:

It is very important to replace the camshaft in the bearing journals evenly while tightening bearing caps in the subsequent steps.

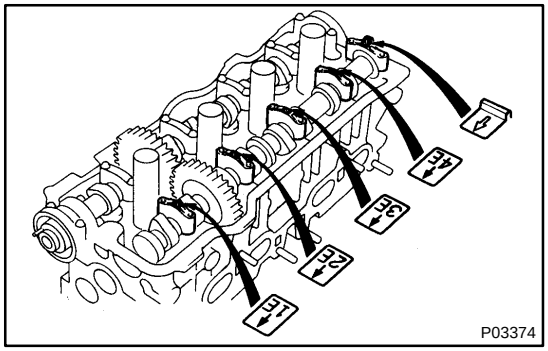

(6) Install the bearing caps in their proper locations.

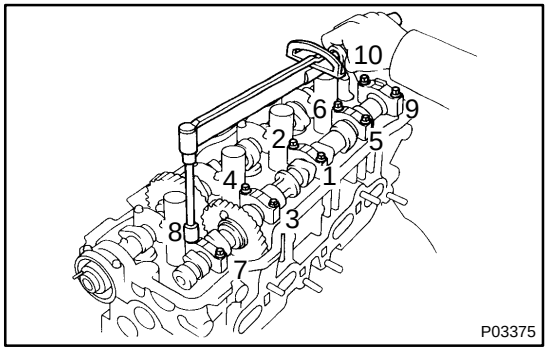

(7) Apply a light coat of engine oil on the threads and under the heads of the bearing cap bolts.

(8) Install and uniformly tighten the 10 bearing cap bolts in several passes, in the sequence shown.

Torque: 19 N·m (190 kgf·cm, 14 ft·lbf)

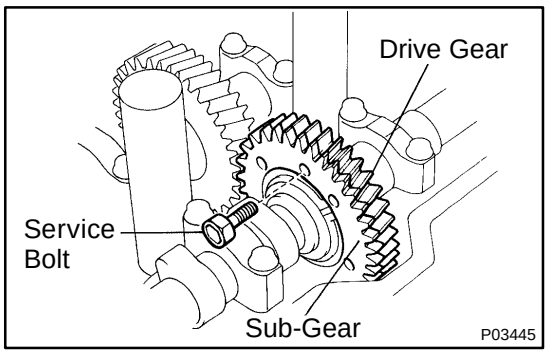

(9) Remove the service bolt.

6. CHECK AND ADJUST VALVE CLEARANCE
(See page EM-4)

Turn the camshaft and position the cam lobe upward, and check and adjust the valve clearance.

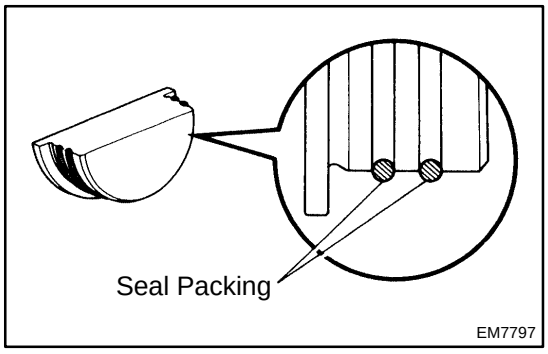

7. INSTALL SEMI-CIRCULAR PLUGS

(a) Remove any old packing (FIPG) material.

(b) Apply seal packing to the semi-circular plug grooves.
Seal packing:
Part No. 08826-00080 or equivalent

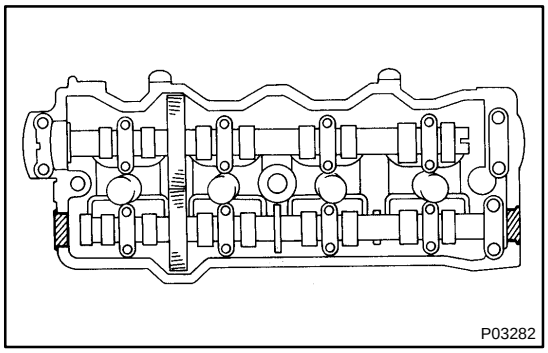

(c) Install the 2 semi-circular plugs to the cylinder head.

8. INSTALL PCV VALVE, PCV HOSE AND HIGH-TENSION CORD CLAMP TO CYLINDER HEAD

(a) Install the high-tension cord clamp with the bolt.

(b) Install the grommet, the PCV valve and hose assembly.

(c) Install the PCV hose.

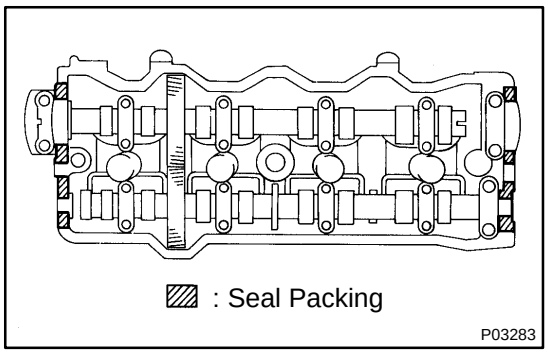

9. INSTALL CYLINDER HEAD COVER

(a) Remove any old packing (FIPG) material.

(b) Apply seal packing to the cylinder head as shown in the illustration.
Seal packing:
Part No. 08826-00080 or equivalent

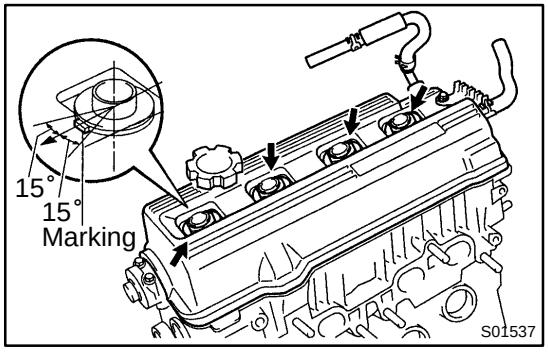

(c) Install the gasket to the head cover.

(d) Install the head cover with the 4 grommets and nuts. Uniformly tighten the nuts in several passes.
Torque: 23 N·m (230 kgf·cm, 17 ft·lbf)

HINT:
Install the grommets so that their markings are as shown in the illustration.

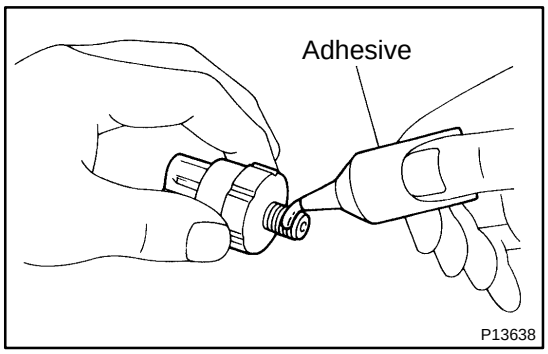

10. INSTALL OIL PRESSURE SWITCH

(a) Apply adhesive to 2 or 3 threads.
Adhesive:
Part No. 08833-00080, THREE BOND 1324 or equivalent

(b) Install the oil pressure switch.

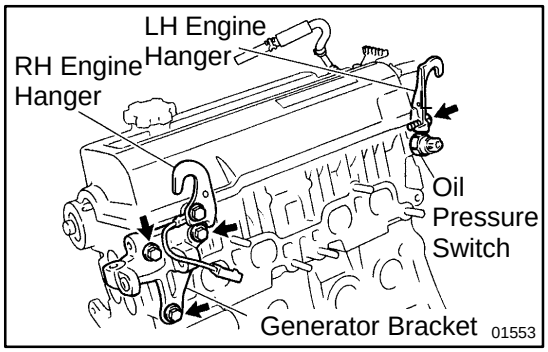

11. INSTALL ENGINE HANGERS AND GENERATOR BRACKET

(a) Install the generator bracket and RH engine hanger assembly with the 3 bolts.
Torque: 25 N·m (250 kgf·cm, 18 ft·lbf)

(b) Install the LH engine hanger with the bolt.
Torque: 25 N·m (250 kgf·cm, 18 ft·lbf)

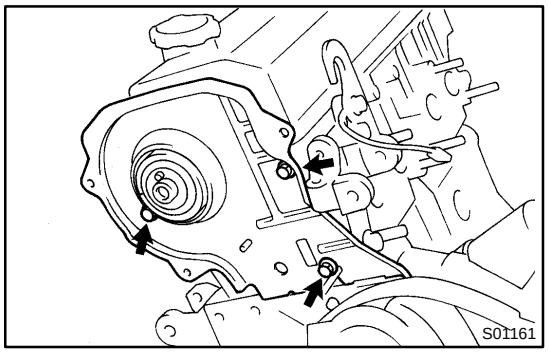

12. INSTALL NO.3 TIMING BELT COVER

Install the timing belt cover with the 3 bolts.
Torque: 7.8 N·m (80 kgf·cm, 69 in.·lbf)

13. TEMPORARILY INSTALL NO.1 IDLER PULLEY AND TENSION SPRING
(See page EM-19)

14. INSTALL CAMSHAFT TIMING PULLEY
(See page EM-19)

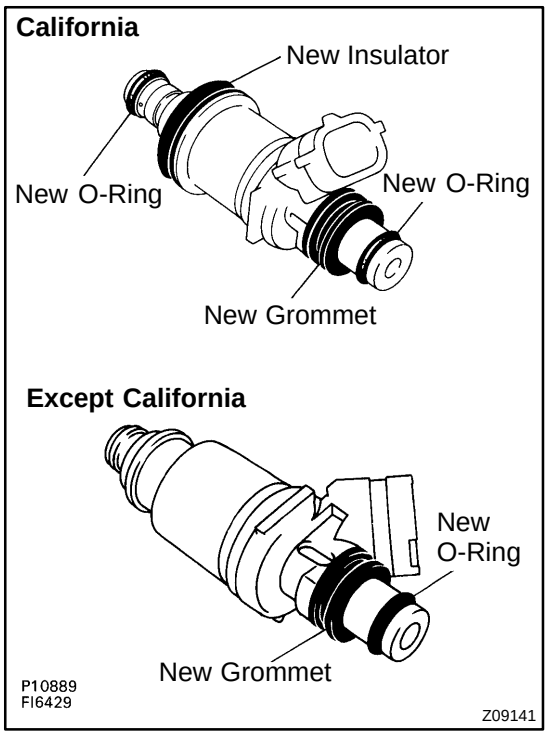

15. CONNECT TIMING BELT TO CAMSHAFT TIMING PULLEY (See page EM-19)

16. INSTALL INJECTORS AND DELIVERY PIPE

(a) California:
Install a new insulator and grommet to each injector.

(b) Except California:
Install a new grommet to each injector.

(c) California:
Apply a light coat of gasoline onto 2 new O-rings, and install them to each injector.

(d) Except California:
Apply a light coat of gasoline onto a new O-ring, and install it to each injector.

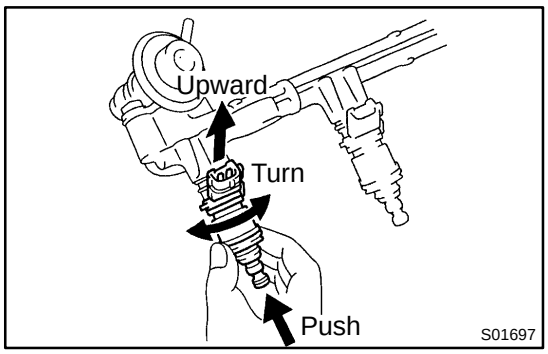

(e) While turning the injector clockwise and counterclockwise, push it to the delivery pipe. Install the 6 injectors.

(f) Position the injector connector upward.

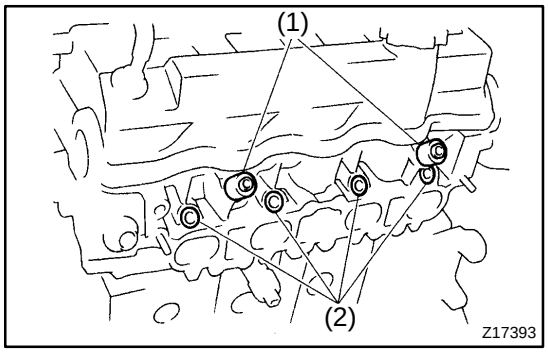

(g) Install these parts to the cylinder head:
- (1) 2 spacers
- (2) Except California:
  4 new insulators

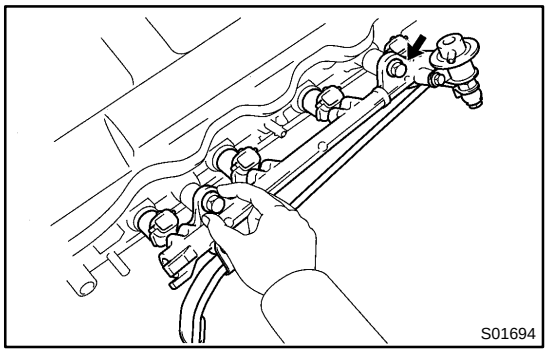

(h) Attach the 4 injectors together with the delivery pipe to the cylinder head.

(i) Temporarily install the 2 bolts holding the delivery pipe to the cylinder head.

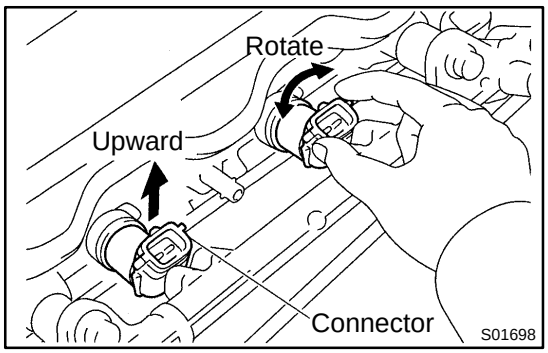

(j) Check that the injectors rotate smoothly.

HINT:

If injectors do not rotate smoothly, the probable cause is incorrect installation of O-rings. Replace the O-rings.

(k) Position the injector connector upward.

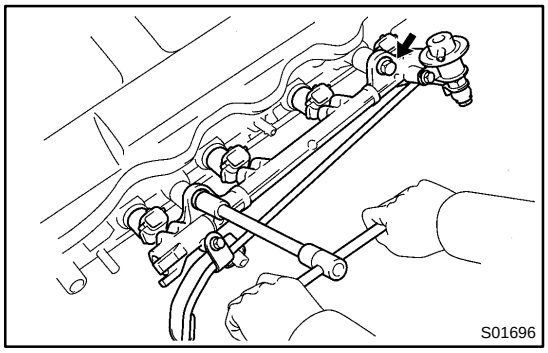

(l) Tighten the 2 bolts holding the delivery pipe to the cylinder head.

Torque: 13 N·m (130 kgf·cm, 9 ft·lbf)

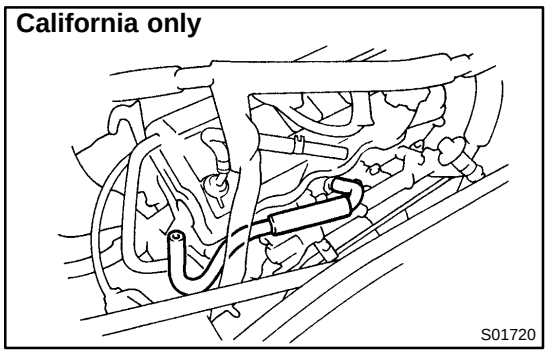

17. California only:
INSTALL AIR HOSE FOR AIR ASSIST SYSTEM

Connect the air hose to the cylinder head port.

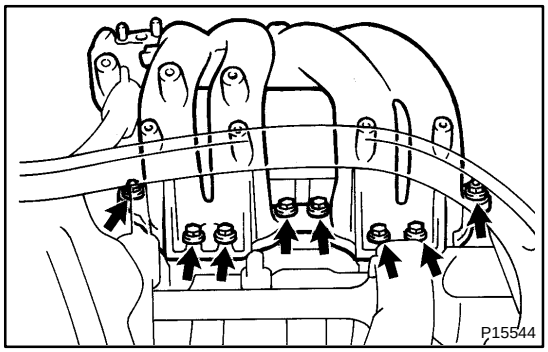

18. INSTALL INTAKE MANIFOLD

(a) Insert the intake manifold between the cylinder head and dash panel.

(b) Insert the engine wire between the cylinder head and intake manifold.

(c) Install a new gasket and the intake manifold with the 6 bolts and 2 nuts. Uniformly tighten the bolts and nuts in several passes.

Torque: 19 N·m (195 kgf·cm, 14 ft·lbf)

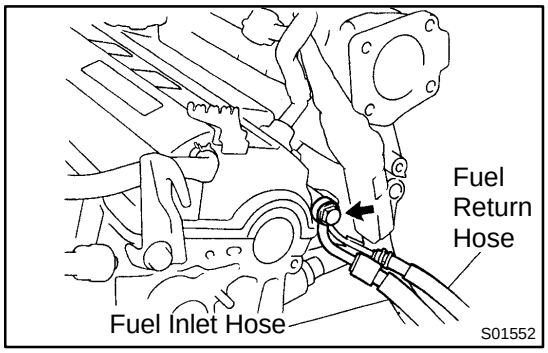

19. CONNECT FUEL INLET HOSE TO DELIVERY PIPE

Connect the fuel inlet pipe to the delivery pipe with 2 new gaskets and the union bolt.

Torque: 34 N·m (350 kgf·cm, 25 ft·lbf)

20. CONNECT FUEL RETURN HOSE TO RETURN HOSE

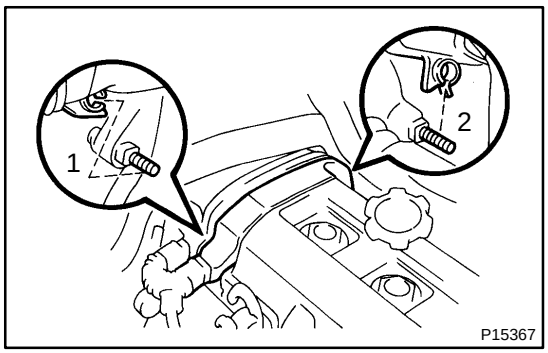

21. INSTALL ENGINE WIRE

(a) Install the engine wire protector to the 2 mounting bolts of the No.2 timing belt cover in the sequence shown.

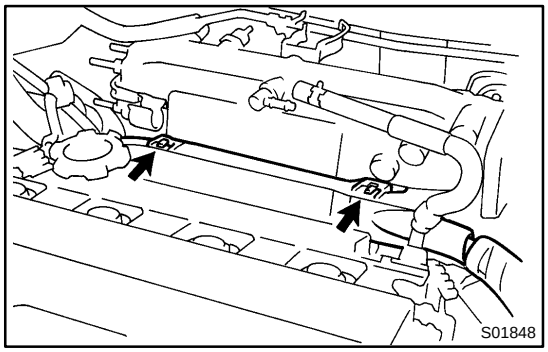

(b) Install the the engine wire protector to the 2 brackets on the front side of the intake manifold.

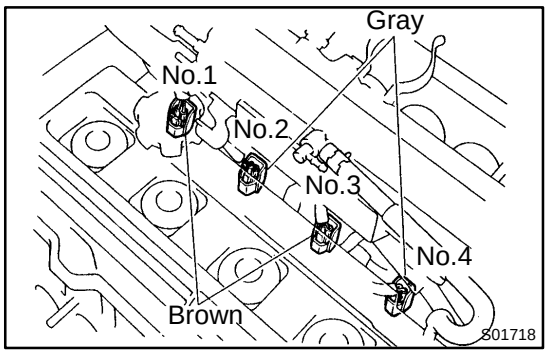

(c) Connect the 4 injector connectors.

HINT:

The No.1 and No.3 injector connectors are brown, and the No.2 and No.4 injector connectors are gray.

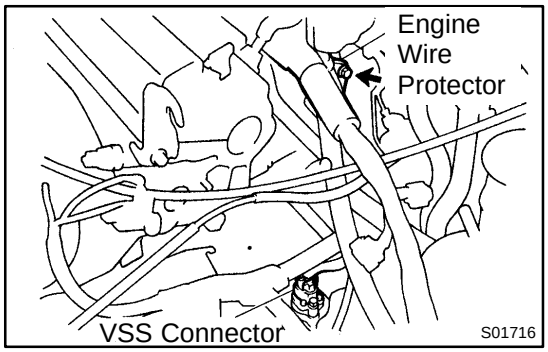

(d) Install the the engine wire protector to the LH side of the intake manifold with the bolt.

(e) Connect the VSS sensor connector.

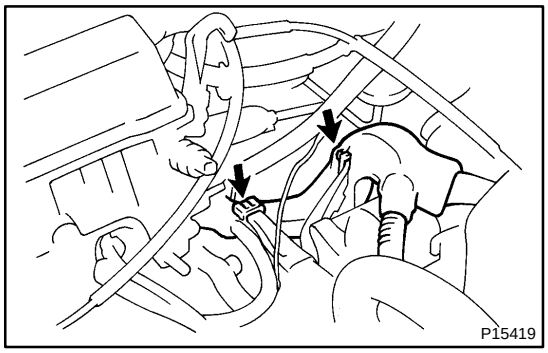

(f) Install the engine wire protector to the bracket on the starter.

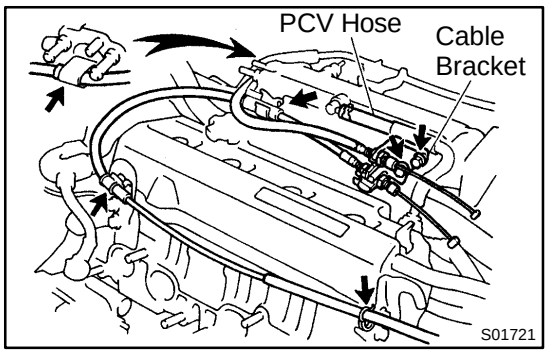

22. INSTALL ACCELERATOR, A/T THROTTLE CONTROL CABLES AND BRACKET

(a) Install the cable bracket to the intake manifold with the 2 bolts.

(b) Install the control cables to the 4 clamps.

23. CONNECT PCV HOSE TO INTAKE MANIFOLD

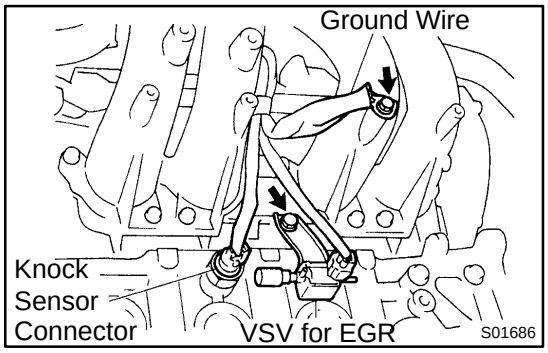

24. INSTALL VSV FOR EGR

(a) Install the VSV with the bolt.

(b) Connect the VSV connector.

25. CONNECT KNOCK SENSOR 1 CONNECTOR

26. INSTALL GROUND WIRES

Install the 2 ground wires with the bolt.

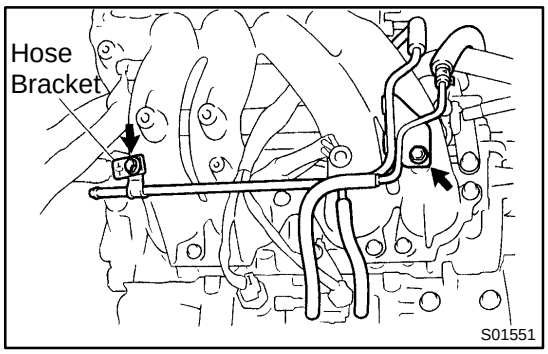

27. INSTALL AIR TUBE

(a) Install the air tube and hose bracket (for EGR) with the 2 bolts.

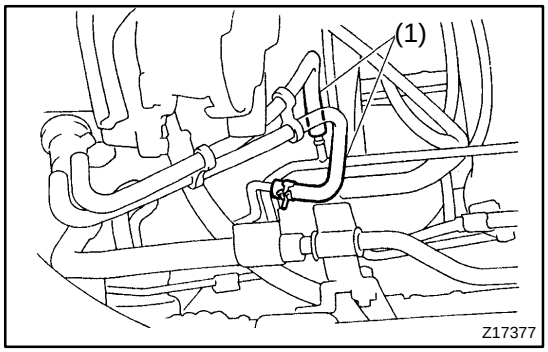

(b) Connect these hoses:
(1) 2 PS air hoses to air tube

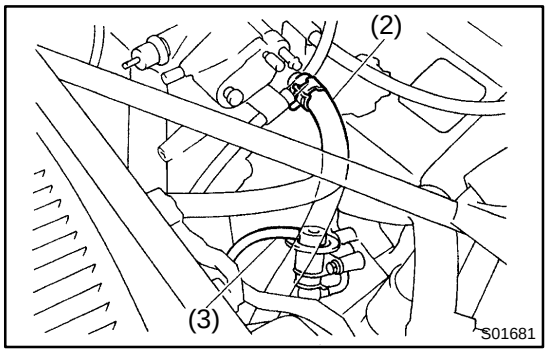

(2) PS air hose to intake manifold
(3) Vacuum sensing hose to fuel pressure regulator

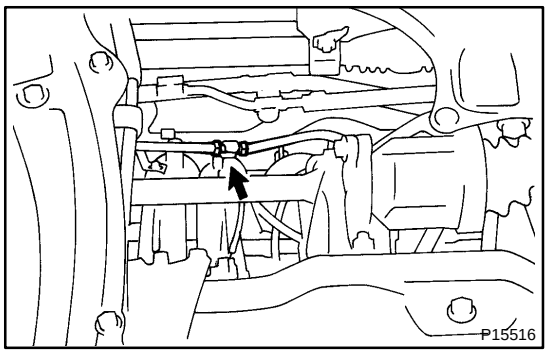

28. INSTALL A/T THROTTLE CONTROL CABLE TO INTAKE MANIFOLD

Install the control cable to the clamp on the rear side of the intake manifold.

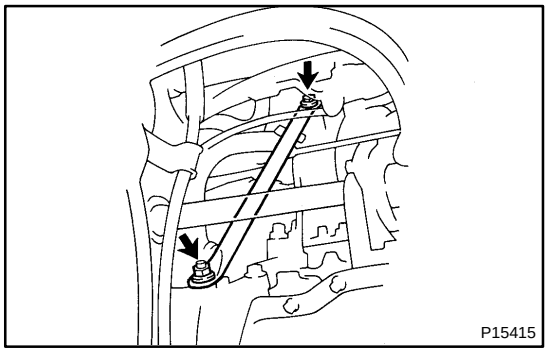

29. INSTALL INTAKE MANIFOLD STAY

Install the intake manifold stay with the bolt and nut.

Torque:
Bolt: 21 N·m (210 kgf·cm, 15 ft·lbf)
Nut: 44 N·m (440 kgf·cm, 32 ft·lbf)

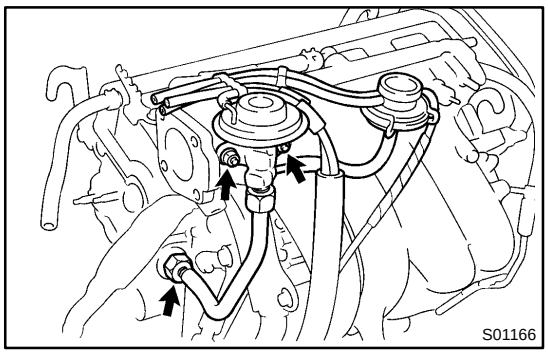

30. INSTALL EGR VALVE AND VACUUM MODULATOR

(a) Install a new gasket and the EGR valve with the union nut and 2 nuts.

Torque:
Nut: 13 N·m (130 kgf·cm, 9 ft·lbf)
Union bolt: 59 N·m (600 kgf·cm, 43 ft·lbf)

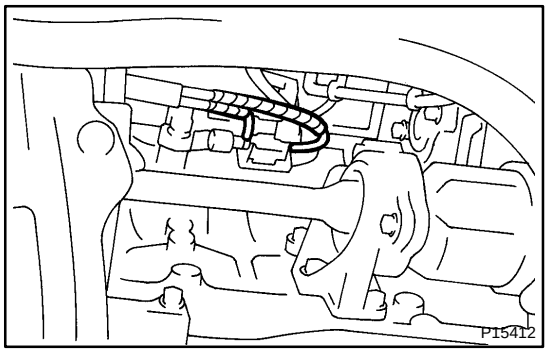

(b) Install the vacuum modulator to the clamp on the intake manifold.

(c) Connect the 2 vacuum hoses to the VSV for the EGR.

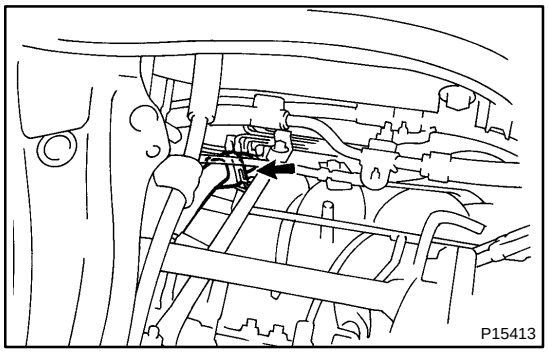

(d) Install the hose clamp to the bracket on the air tube.

(e) Connect the EVAP hose to the charcoal canister.

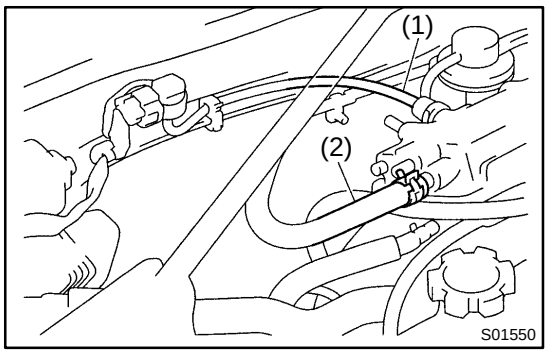

31. INSTALL HOSES

Connect these hoses:

(1) MAP sensor vacuum hose to gas filter on intake manifold

(2) Brake booster vacuum hose to intake manifold

32. INSTALL THROTTLE BODY (See page SF-37)

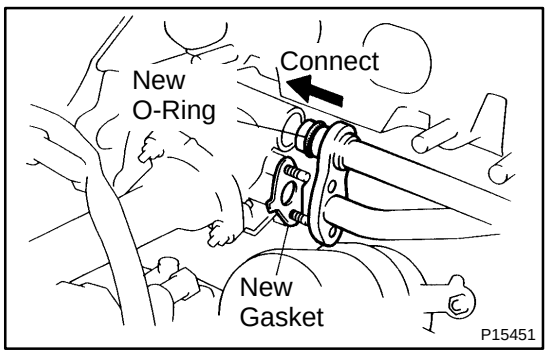

33. INSTALL WATER BYPASS PIPE

(a) Install a new gasket to the water pump cover.

(b) Install a new O-ring to the bypass pipe.

(c) Apply soapy water on the O-ring.

(d) Connect the water bypass pipe to the water pump cover.

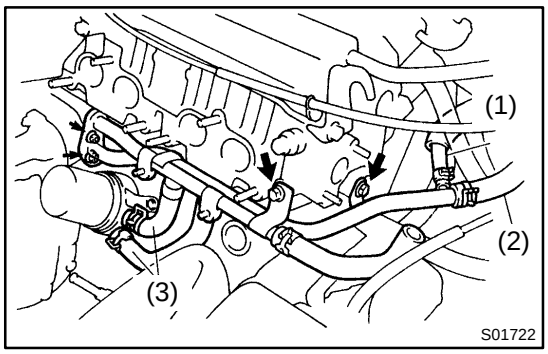

(e) Install the bypass pipe with the 2 nuts and 2 bolts.
Torque:
Nut: 9.3 N·m (95 kgf·cm, 82 in.·lbf)
Bolt: 19 N·m (195 kgf·cm, 14 ft·lbf)

(f) Connect these hoses:
- IAC valve water bypass hose to water bypass pipe
- Heater water hose to water bypass pipe
- 2 oil cooler water bypass hoses to oil cooler

(g) Install the oil cooler heat protector with the 2 nuts and bolt.

34. INSTALL WATER OUTLET

(a) Install a new gasket and the water outlet with the 2 nuts.
Torque: 15 N·m (150 kgf·cm, 11 ft·lbf)

(b) Connect these hoses to the water outlet:
(1) Radiator hose
(2) Water bypass pipe hose
(3) Heater water hose
(4) Vacuum hose (from P port of throttle body) to upper port of TVV for EVAP
(5) Vacuum hose (from charcoal canister) to lower port of TVV for EVAP
(6) IAC valve water bypass hose

(c) Connect these connectors:
- ECT sensor connector
- ECT sender gauge connector

35. CONNECT OIL PRESSURE SWITCH CONNECTOR

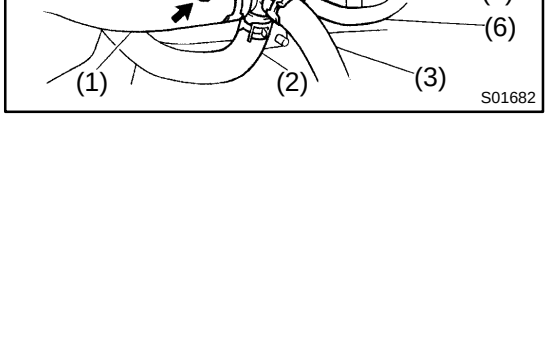

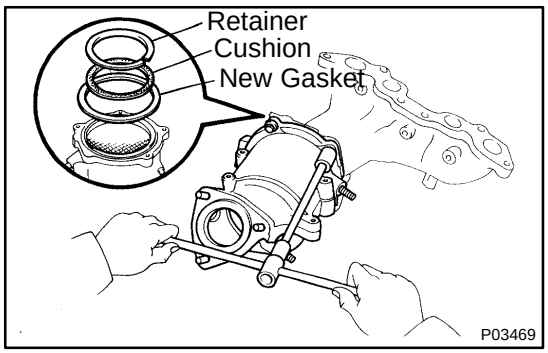

36. ASSEMBLE EXHAUST MANIFOLD AND FRONT TWC

(a) Place the cushion, retainer and a new gasket on the TWC.

(b) Install the TWC to the exhaust manifold with the 3 bolts and 2 new nuts.
Torque: 29 N·m (300 kgf·cm, 22 ft·lbf)

(c) Install the lower manifold heat insulator with the 5 bolts.

(d) Install the 2 TWC heat insulators with the 8 bolts.

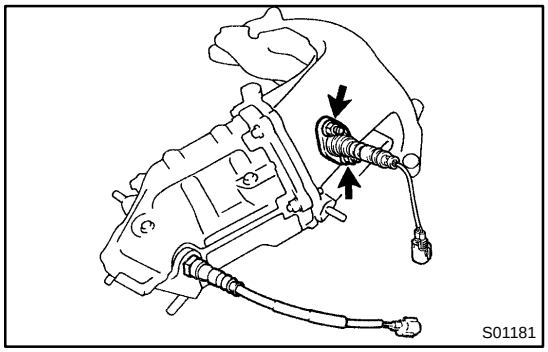

37. INSTALL OXYGEN SENSOR (BANK 1 SENSOR 1) TO EXHAUST MANIFOLD

Install a new gasket and the oxygen sensor with 2 new nuts.
Torque: 20 N·m (200 kgf·cm, 14 ft·lbf)

38. INSTALL OXYGEN SENSOR (BANK 1 SENSOR 2) TO FRONT TWC
Torque: 44 N·m (450 kgf·cm, 33 ft·lbf)

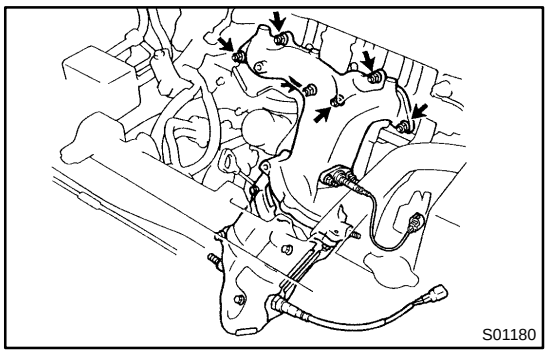

39. INSTALL EXHAUST MANIFOLD AND FRONT TWC ASSEMBLY

(a) Install a new gasket, the exhaust manifold and TWC assembly with the 6 nuts. Uniformly tighten the nuts in several passes.
Torque: 49 N·m (500 kgf·cm, 36 ft·lbf)

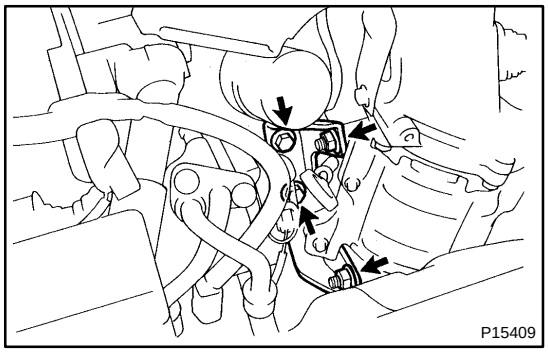

(b) Install the RH exhaust manifold stay with the 2 bolts and 2 nuts.
Torque: 42 N·m (425 kgf·cm, 31 ft·lbf)

(c) Install the upper manifold heat insulator with the 5 bolts.

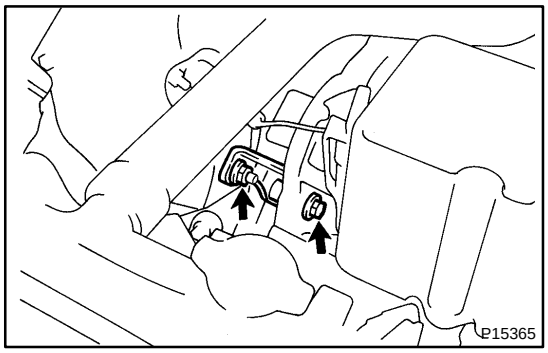

(d) Install the LH exhaust manifold stay with the bolt and nut.
Torque:
Bolt: 39 N·m (400 kgf·cm, 29 ft·lbf)
Nut: 42 N·m (425 kgf·cm, 31 ft·lbf)

(e) Connect these connectors:
- Oxygen sensor (bank 1 sensor 1) connector
- Oxygen sensor (bank 1 sensor 2) connector

40. INSTALL FRONT EXHAUST PIPE
(See page EM-81)
41. INSTALL GENERATOR (See page CH-20)
42. INSTALL DISTRIBUTOR (See page IG-13)
43. INSTALL AIR CLEANER CASE AND CAP
(See page EM-81)
44. FILL WITH ENGINE COOLANT
45. START ENGINE AND CHECK FOR LEAKS
46. RECHECK ENGINE COOLANT LEVEL AND OIL LEVEL

IG089-03

INSTALLATION

1. REMOVE RH ENGINE UNDER COVER

2. SET NO.1 CYLINDER TO TDC/COMPRESSION

Turn the crankshaft clockwise, and position the slit of the intake camshaft as shown in the illustration.

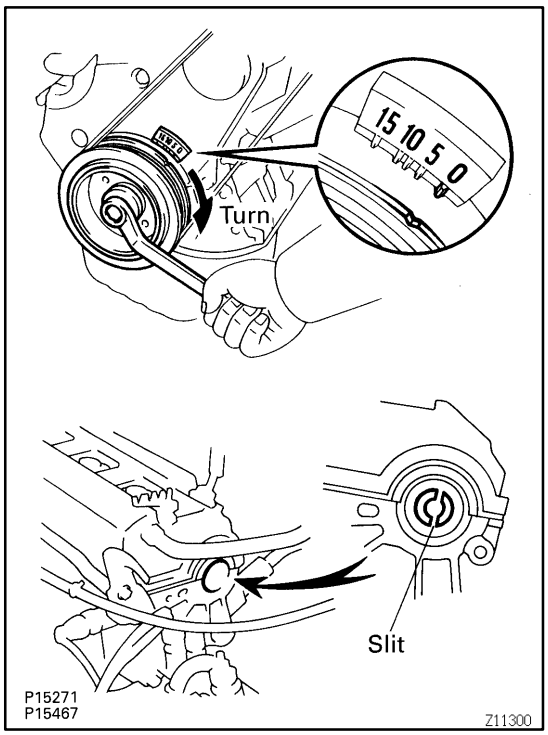

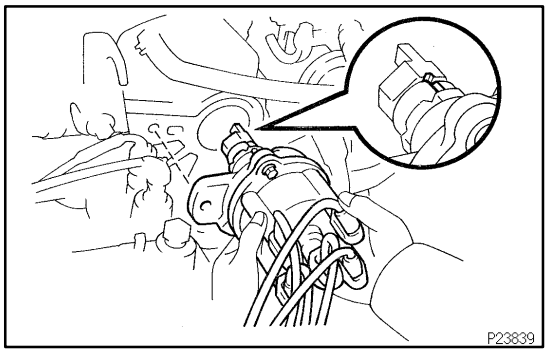

3. INSTALL DISTRIBUTOR

(a) Install a new O-ring to the distributor housing.

(b) Apply a light coat of engine oil on the O-ring.

(c) Align the cutout portion of the coupling with the groove of the housing.

(d) Insert the distributor, aligning the bolt holes of the distributor flange and cylinder head.

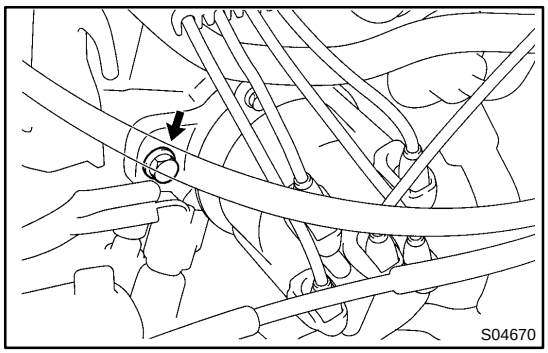

(e) Tighten the bolt.
Torque: 19 N·m (195 kgf·cm, 14 ft·lbf)

4. CONNECT HIGH-TENSION CORDS TO SPARK PLUGS AND IGNITION COIL

(a) Connect the 5 high-tension cords to the spark plugs and ignition coil.
Firing order:
1 - 3 - 4 - 2

(b) Install the 4 high-tension cords to the cord clamps on the cylinder head cover.

5. CONNECT DISTRIBUTOR CONNECTOR

6. INSTALL AIR CLEANER CAP

7. CHECK IGNITION TIMING
(See page EM-9)

8. REINSTALL RH ENGINE UNDER COVER

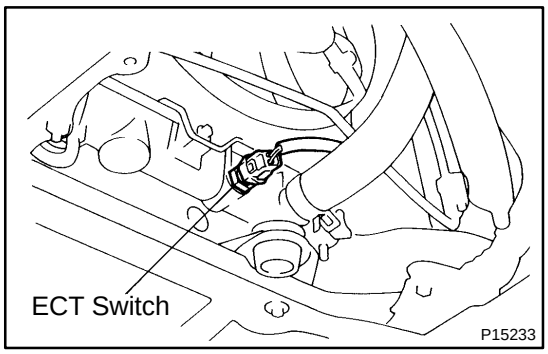

ENGINE COOLANT TEMPERATURE (ECT) SWITCH

CO0GU-02

INSPECTION

1. DRAIN ENGINE COOLANT

2. REMOVE ECT SWITCH

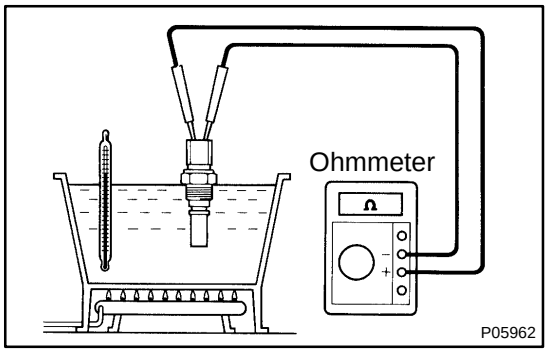

3. INSPECT ECT SWITCH

(a) Using an ohmmeter, check that there is no continuity between the terminals when the coolant temperature is above 93˚C (199˚F).

If there is continuity, replace the switch.

(b) Using an ohmmeter, check that there is continuity between the terminals when the coolant temperature is below 83˚C (181˚F).

If there is no continuity, replace the switch.

4. REINSTALL ECT SWITCH

5. REFILL WITH ENGINE COOLANT

6. START ENGINE AND CHECK FOR COOLANT LEAKS

EM0JG-02

INSTALLATION

1. INSTALL REAR END PLATE

Insatll the rear end plate with the bolt.

Torque: 9.3 N·m (95 kgf·cm, 82 in.·lbf)

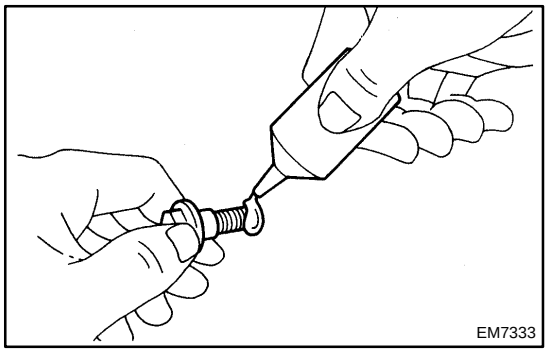

2. M/T:
INSTALL FLYWHEEL

(a) Apply adhesive to 2 or 3 threads of the bolt end.
Adhesive:
Part No.08833-00070, THREE BOND 1324 or equivalent

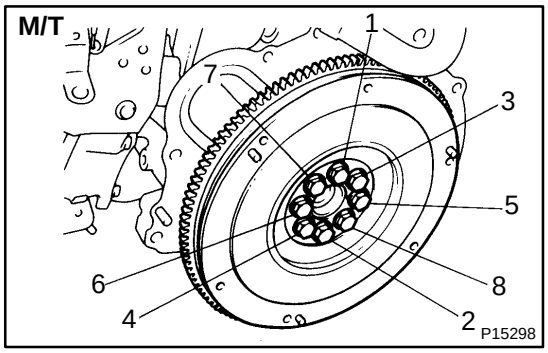

(b) Install the flywheel on the crackshaft.
(c) Install and uniformly tighten the 8 bolts in several passes, in the sequence shown.
Torque: 88 N·m (900 kgf·cm, 65 ft·lbf)

3. A/T:
INSTALL DRIVE PLATE
Torque: 83 N·m (850 kgf·cm, 61 ft·lbf)

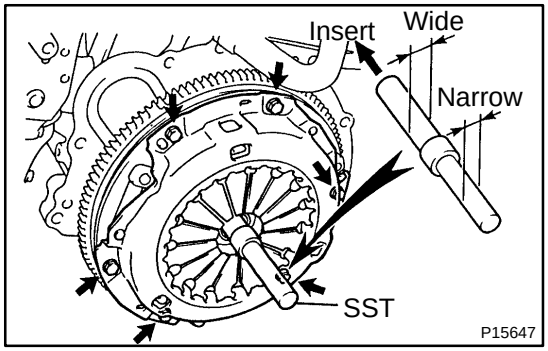

4. M/T:
INSTALL CLUTCH DISC AND COVER

Using SST, install the disc and cover with the 6 bolts.
Uniformly tighrn the bolts in several passes.
SST 09301-00210
Torque: 19 N·m (195 kgf·cm, 14 ft·lbf)

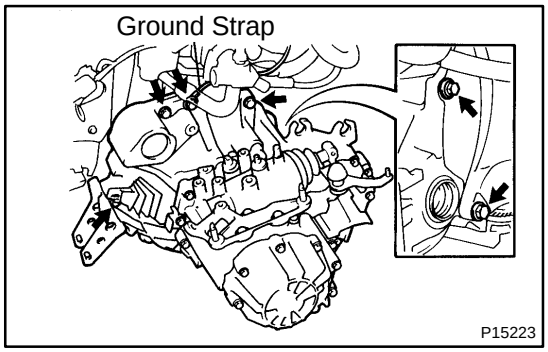

5. INSTALL TRANSAXLE TO ENGINE

(a) Attach the transaxle to the engine.
(b) Install the ground strap and 6 bolts.
Torque:
14 mm head
46 N·m (470 kgf·cm, 34 ft·lbf)
17 mm head
64 N·m (650 kgf·cm, 47 ft·lbf)

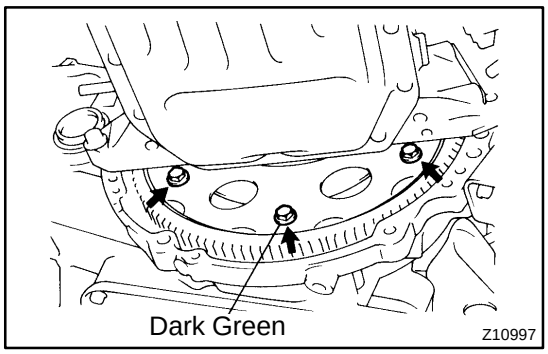

6. A/T:
INSTALL TORQUE CONVERTER CLUTCH MOUNTING BOLTS

(a) Apply adhesive to 2 or 3 threads of the bolt end.
Adhesive:
Part No.08833-00070, THREE BOND 1324 or equivalent

(b) Hold the crankshaft pulley bolt with a wrench, and install the 6 bolts evenly.
Torque: 25 N·m (250 kgf·cm, 18 ft·lbf)

HINT:
First tighten the dark green colred bolt, install the other bolts.

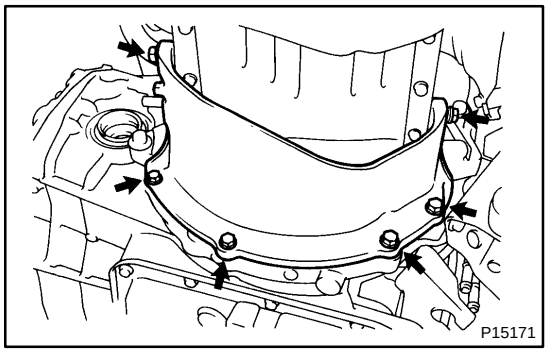

7. INSTALL REAR END PLATE STIFFENER

Install the plate stiffener with the 6 bolts. Alternately tighten the bolts in several passes.
Torque:
12 mm head
21 N·m (210 kgf·cm, 15 ft·lbf)
14 mm head
44 N·m (440 kgf·cm, 32 ft·lbf)

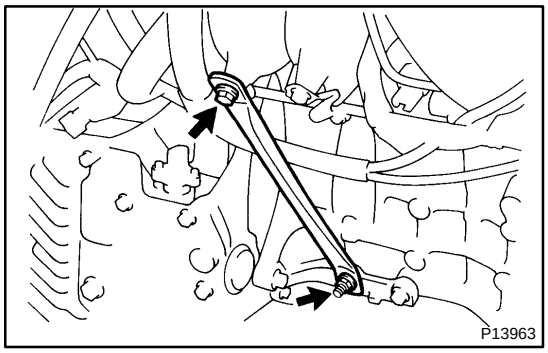

8. INSTALL NO.2 INTAKE MANIFOLD STAY

Install the intake manifold stay with the bolt and nut.
Torque:
Bolt:
21 N·m (210 kgf·cm, 15 ft·lbf)
Nut:
44 N·m (440 kgf·cm, 32 ft·lbf)

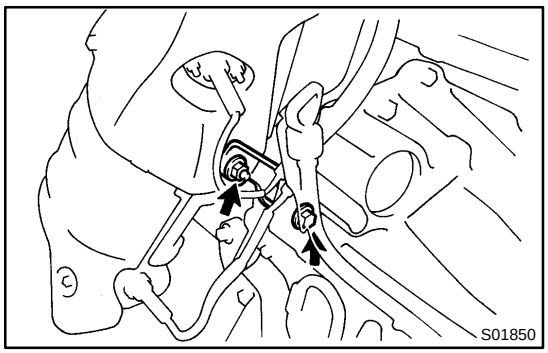

9. INSTALL LH EXHAUST MANIFOLD STAY

Install the exhaust manifold stay with the bolt and nut.
Torque:
Bolt:
39 N·m (400 kgf·cm, 29 ft·lbf)
Nut:
42 N·m (425 kgf·cm, 31 ft·lbf)

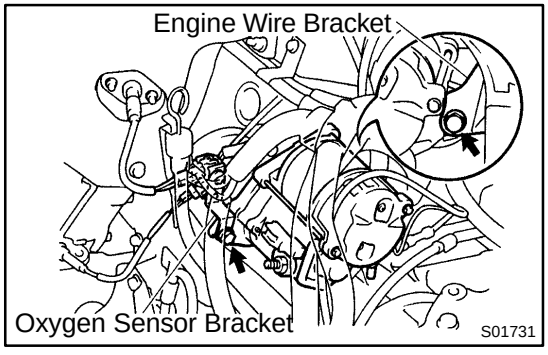

10. A/T:
INSTALL STARTER

(a) Install the starter, the oxygen sensor and engine wire brackets with the 2 bolts.
Torque: 39 N·m (400 kgf·cm, 29 ft·lbf)

(b) Connect the starter cable with the nut.

(c) Connect the starter connector.

11. CONNECT CONNECTORS AND CABLE

(a) VSS connector

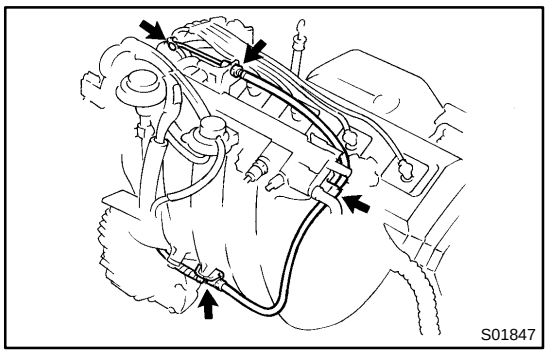

(b) A/T:
PNP switch connector
(c) A/T:
2 solenoid connectors
(d) Ground cable:
Install the ground cable with the bolt.

12. A/T:
INSTALL A/T THROTTLE CABLE TO THROTTLE BODY AND INTAKE MANIFOLD

(a) Connect the throttle cable to the throttle body.
(b) Install the throttle cable to the cable bracket.
(c) Connect the throttle cable to the clamps on the intake manifold.

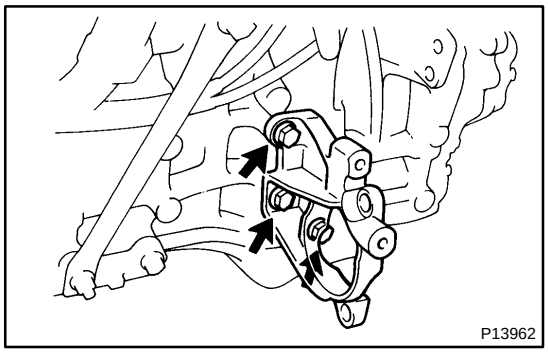

13. INSTALL DRIVE SHAFT BEARING BRACKET

Install the bearing bracket with the 3 bolts.
Torque: 64 N·m (650 kgf·cm, 47 ft·lbf)

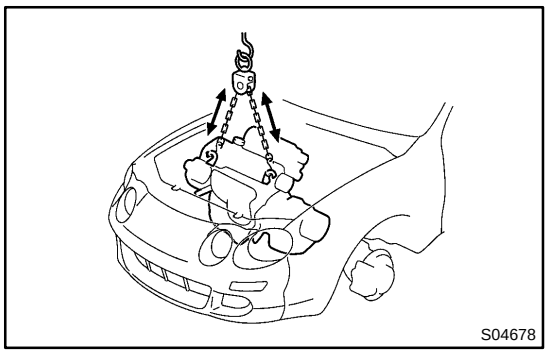

14. INSTALL ENGINE AND TRANSAXLE ASSEMBLY IN VEHICLE

(a) Attach the engine chain hoist to the engine hangers.
(b) Slowly lower the engine into the engine compartment.
Tilt the transaxle downward, lower the engine and clear the LH body mounting.
(c) Keep the engine level, and align RH and LH mountings with the body mountings.

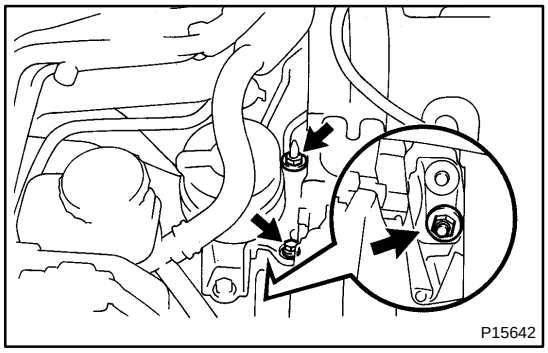

(d) Attach the RH engine mounting bracket to the mounting insulator, and temporarily install the bolt and 2 nuts.

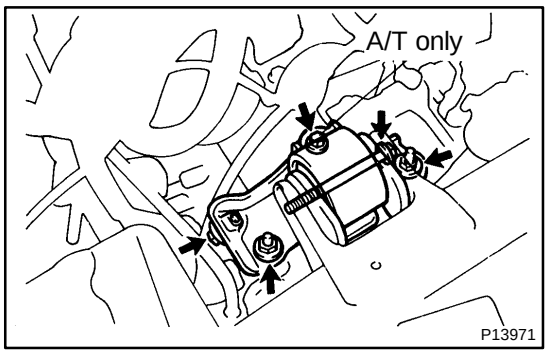

(e) Temporarily install the LH engine mounting insulator to the body with the through bolt.
(f) Attach the LH engine mounting bracket to the mounting insulator, and install the 2 nuts and bolt (M/T) or 2 bolts (A/T).
Torque: 64 N·m (650 kgf·cm, 47 ft·lbf)
(g) Tighten the through bolt holding the LH engine mounting insulator to the body.
Torque: 73 N·m (740 kgf·cm, 54 ft·lbf)

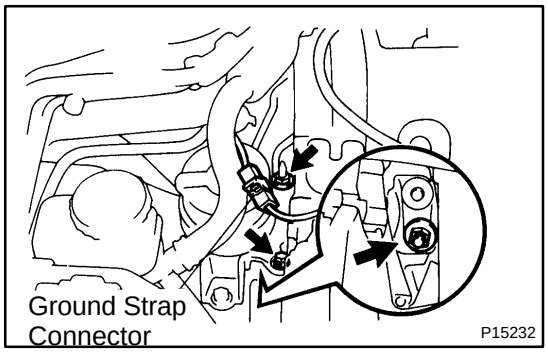

(h) Tighten the bolt and 2 nuts holding the RH engine mounting bracket to the mounting insulator.
Torque:
Bolt
37 N·m (380 kgf·cm, 27 ft·lbf)
Nut
52 N·m (530 kgf·cm, 38 ft·lbf)
(i) Connect the ground strap connector.
(j) Remove the engine chain hoist from the engine.

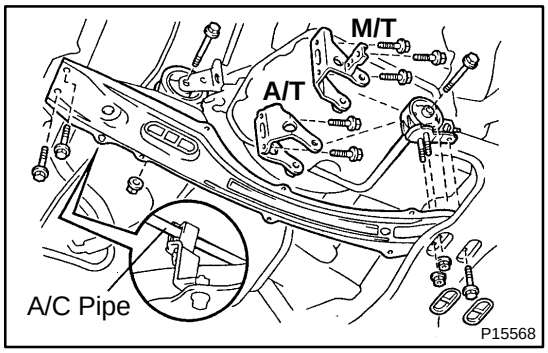

15. INSTALL ENGINE MOUNTING CENTER MEMBER
(a) Attach the center member together with the rear engine mounting insulator to the front suspension member.
(b) Temporarily install the 2 bolts holding the center member to the body.
(c) Install the rear engine mounting bracket with the 2 bolts (A/T) or 3 bolts (M/T).
Torque: 78 N·m (800 kgf·cm, 58 ft·lbf)
(d) Temporarily install the bolt and 2 nuts holding the rear engine mounting insulator to the front suspension member.
(e) Temporarily install the bolt holding the rear engine mounting bracket to the mounting insulator.
(f) Temporarily install the bolt and nut holding the front engine mounting bracket to the mounting insulator.
(g) Tighten the 2 bolts holding the center member to the body.
Torque: 35 N·m (360 kgf·cm, 26 ft·lbf)
(h) Tighten the bolt and 2 nuts holding the rear engine mounting insulator to the front suspension member.
Torque: 80 N·m (820 kgf·cm, 59 ft·lbf)
(i) Tighten the bolt holding the rear engine mounting bracket to the mounting insulator.
Torque: 88 N·m (900 kgf·cm, 65 ft·lbf)
(j) Tighten the bolt and nut holding the front engine mounting bracket to the mounting insulator.
Torque: 88 N·m (900 kgf·cm, 65 ft·lbf)
(k) Install the A/C pipe to the bracket.
(l) Install the 2 dust covers to the center member.

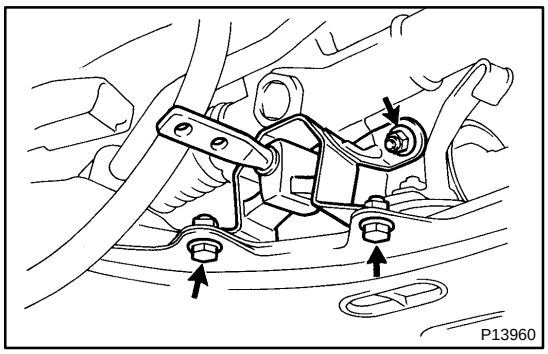

16. INSTALL EXHAUST PIPE SUPPORT BRACKET

Install the support bracket with the 2 bolts and nut.

Torque: 19 N·m (195 kgf·cm, 14 ft·lbf)

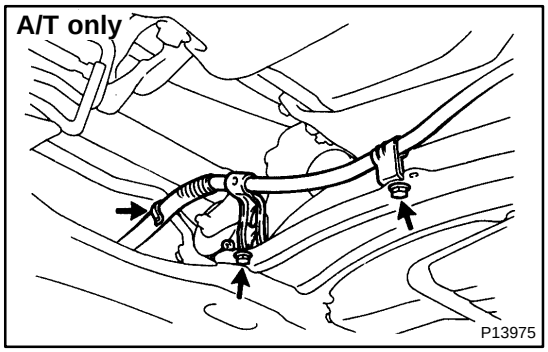

17. A/T:
INSTALL TRANSAXLE CONTROL CABLE TO ENGINE MOUNTING CENTER MEMBER

Install the control cable with the 2 clamps and 2 bolts.

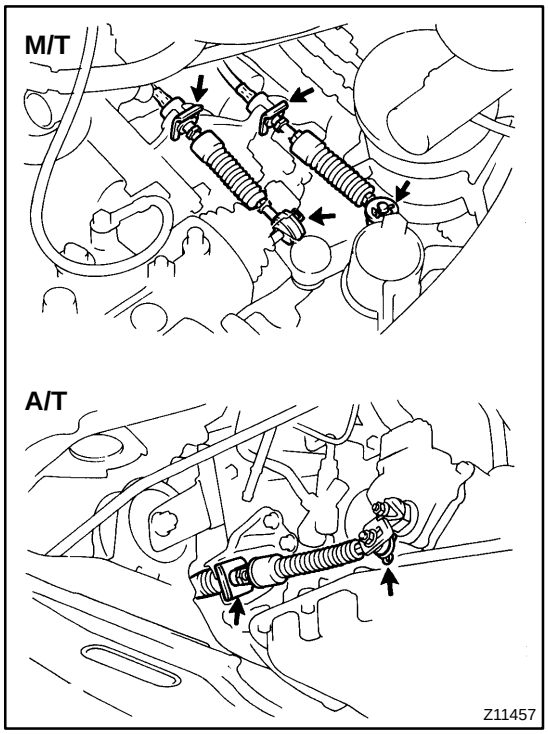

18. CONNECT TRANSAXLE CONTROL CABLE(S) TO TRANSAXLE

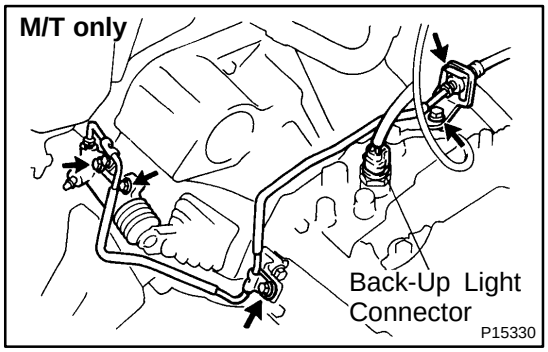

19. M/T:
INSTALL CLUTCH RELEASE CYLINDER

(a) Install the release cylinder with the 2 bolts.
Torque: 12 N·m (120 kgf·cm, 9 ft·lbf)

(b) Install the bracket with the bolt, and install the tube to the bracket with the clamp.

(c) Install the tube with the clamp and bolt.

(d) Connect the back-up light switch connector.

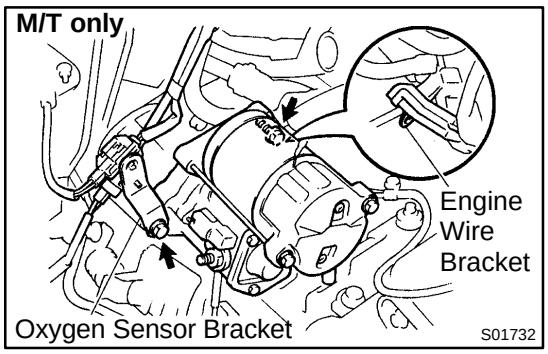

20. M/T:
INSTALL STARTER

(a) Install the starter, the oxygen sensor and engine wire brackets with the 2 bolts.
Torque: 39 N·m (400 kgf·cm, 29 ft·lbf)

(b) Connect the starter wire and cable with the nut.

(c) Connect the starter connector.

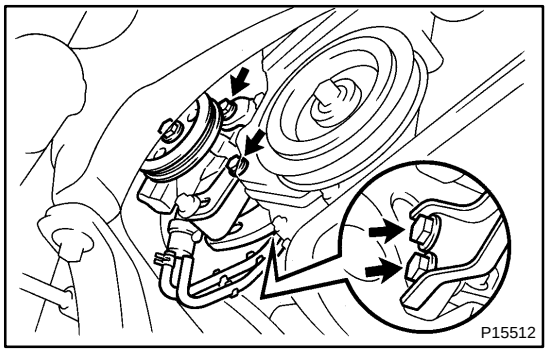

21. INSTALL PS PUMP

(a) Temporarily install the PS pump with the 4 bolts.

(b) Tighten the 3 bolts (except pivot bolt).
Torque: 43 N·m (440 kgf·cm, 32 ft·lbf)

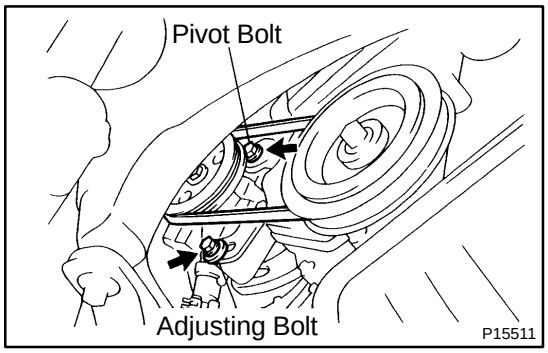

(c) Install the drive belt with the pivot bolt and adjusting bolt.
Torque:
Adjusting bolt
39 N·m (400 kgf·cm, 29 ft·lbf)
Pivot bolt
43 N·m (440 kgf·cm, 32 ft·lbf)

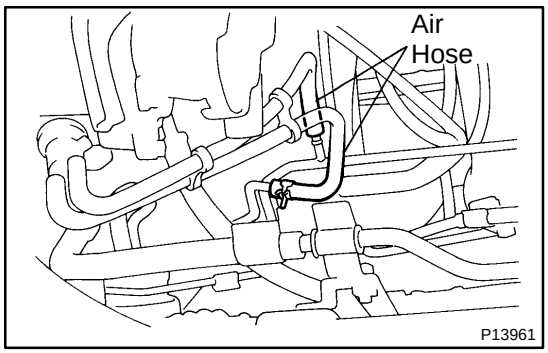

(d) Connect the 2 air hoses to the air tube.

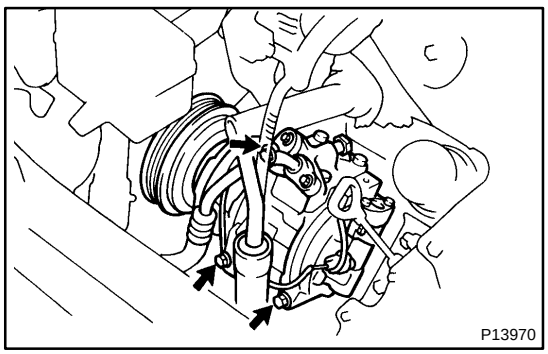

22. INSTALL A/C COMPRESSOR

(a) Install the A/C compressor with the 3 bolts.
Torque: 25 N·m (250 kgf·cm, 18 ft·lbf)

(b) Connect the A/C compressor connector.

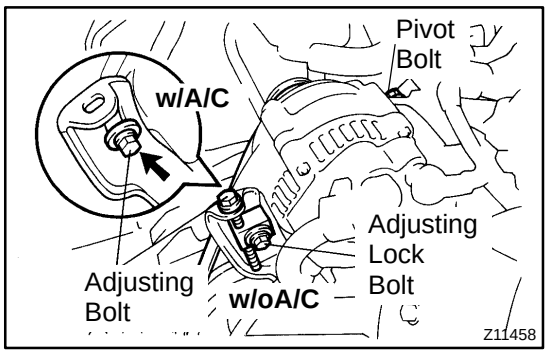



23. INSTALL GENERATOR DRIVE BELT

(a) Install the drive belt with the pivot bolt, adjusting lock bolt (w/ A/C) and adjusting bolt.

(b) Tighten the pivot bolt, adjusting lock bolt (w/ A/C) and adjusting bolt (w/o A/C).

Torque:
Pivot bolt
54 N·m (530 kgf·cm, 40 ft·lbf)
Adjusting lock bolt (w/ A/C), or
Adjusting bolt (w/o A/C)
19 N·m (185 kgf·cm, 14 ft·lbf)

24. INSTALL DRIVE SHAFTS (See page SA-34)

25. INSTALL FRONT EXHAUST PIPE

(a) Place 2 new gaskets to the front and rear of the front exhaust pipe.

(b) Temporarily install the 2 bolts and 2 new nuts holding the front exhaust pipe to the rear TWC.

(c) Temporarily install 3 new nuts holding the front exhaust pipe to the front TWC.

(d) Temporarily install the 2 bolts holding the front exhaust pipe to the exhaust pipe support bracket.

(e) Using a 14 mm deep socket wrench, tighten the 3 nuts holding the front exhaust pipe to the front TWC.

Torque: 62 N·m (630 kgf·cm, 46 ft·lbf)

(f) Tighten the 2 bolts and nuts holding the front exhaust pipe to the rear TWC.

Torque: 43 N·m (440 kgf·cm, 32 ft·lbf)

(g) Tighten the 2 bolts holding the front exhaust pipe to the exhaust pipe support bracket.

Torque: 19 N·m (195 kgf·cm, 14 ft·lbf)

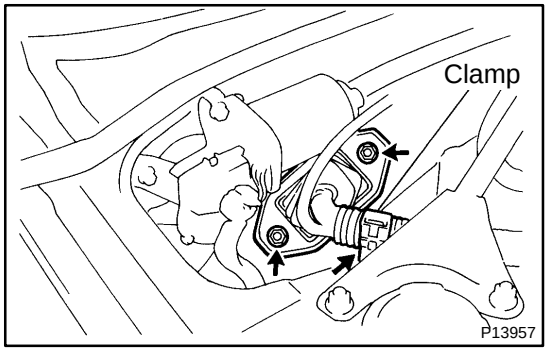

26. CONNECT ENGINE WIRE TO CABIN

(a) Push in the engine wire through the cowl panel.

(b) Install the engine wire retainer with the 2 nuts.

(c) Install the wire clamp to the bracket.

(d) Connect the wire and connectors:

(1) Engine wire from clamp on ECM bracket
(2) 3 ECM connectors
(3) Circuit opening relay connector
(4) 3 connectors to connectors on bracket
(5) A/C amplifier connector

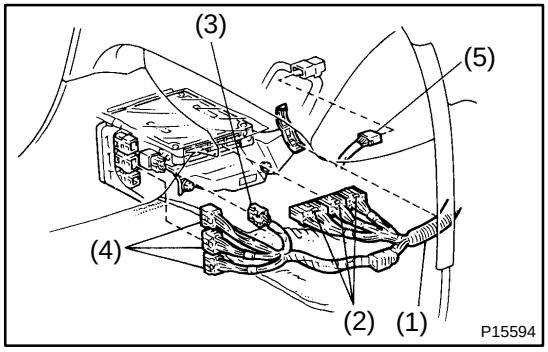

(e) Install the floor carpet.

(f) Install these parts:

- Lower instrument panel finish panel
- Cowl side trim
- Scuff plate

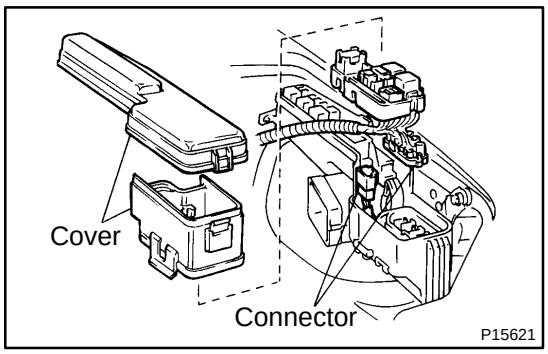

27. CONNECT ENGINE WIRE TO ENGINE COMPARTMENT RELAY BOX

(a) Connect the 2 connectors.
(b) Install the 2 relay box covers.

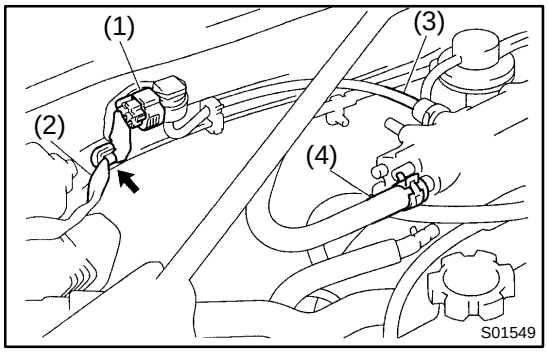

28. CONNECT CONNECTORS, WIRE, CABLE, CORD, STRAP AND HOSES

Connect the connectors, wire, cable, cord, strap and hoses:

(1) MAP sensor connector
(2) MAP sensor wire to clamp on bracket
(3) MAP sensor vacuum hose to gas filter on intake manifold
(4) Brake booster vacuum hose to intake manifold

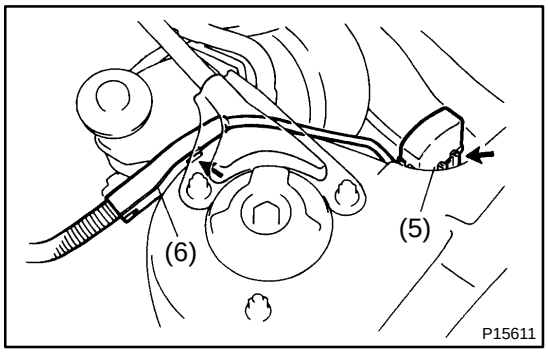

(5) DLC1 to bracket
(6) Engine wire protector to bracket

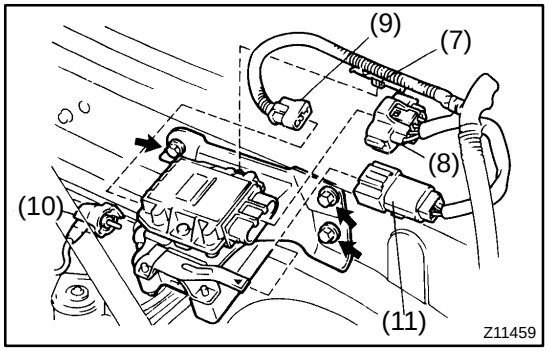

(7) Engine wire clamp to bracket:
Install the ignition coil and igniter assembly with the 3 bolts, and install the engine wire to the bracket.
(8) Igniter connector
(9) Ignition coil connector
(10) High-tension cord to ignition coil
(11) Noise filter

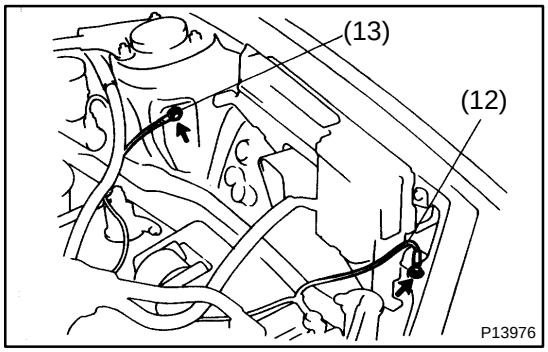

(12) Ground cable to body
(13) Ground strap to body

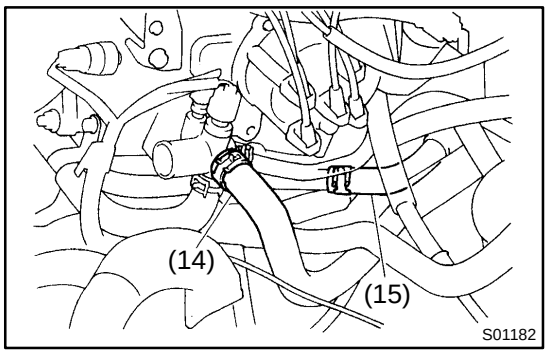

(14) Heater hose to water outlet
(15) Heater hose to water bypass pipe

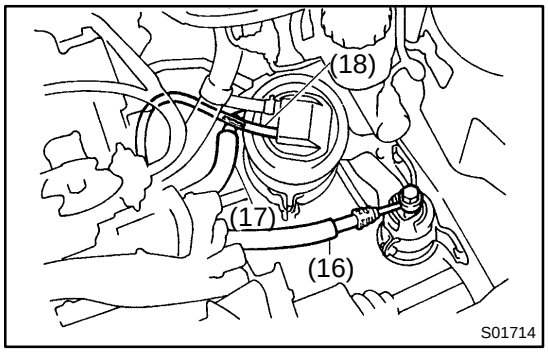

(16) Fuel inlet hose to fuel filter:
Connect the inlet hose with 2 new gaskets and the union bolt.

Torque: 29 N·m (300 kgf·cm, 22 ft·lbf)

(17) Fuel return hose to return pipe
(18) EVAP hose to charcoal canister

29. INSTALL RADIATOR (See page CO-23)

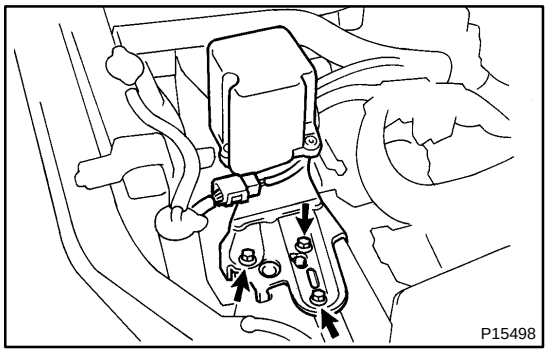

30. w/ Cruise Control System:
INSTALL CRUISE CONTROL ACTUATOR

(a) Install the actuator with the 3 bolts.
(b) Connect the actuator connector.

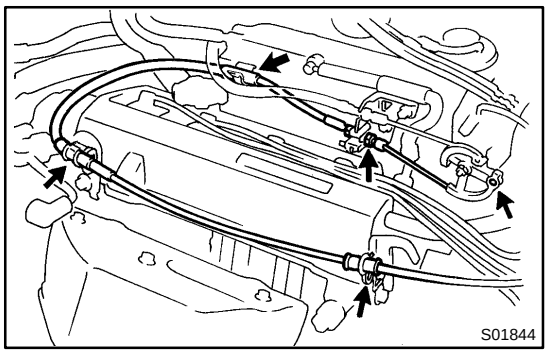

31. INSTALL ACCELERATOR CABLE TO THROTTLE BODY, CABLE BRACKET AND CLAMPS

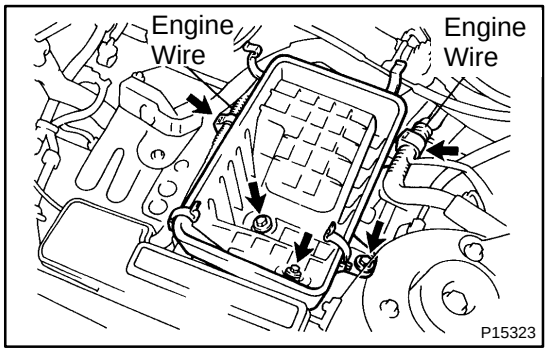

32. INSTALL AIR CLEANER CASE

(a) Install the air cleaner case with the 3 bolts.
(b) Install the 2 engine wires to the clamps on the air cleaner case.
(c) Install the air filter.

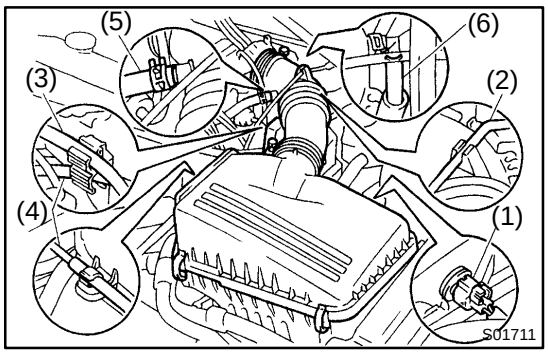

33. INSTALL AIR CLEANER CAP

(a) Connect the air cleaner hose to the throttle body.
(b) Install the air cleaner cap to the air cleaner case with the 4 clamps.
(c) Tighten the hose clamp.
(d) Connect the connector, cord, cables and hoses:
  (1) IAT sensor connector
  (2) High-tension cord to air cleaner hose
  (3) Accelerator cable to clamp
  (4) Cruise control actuator cable to clamps
  (5) PCV hose to air cleaner hose
  (6) California only:
  Air hose for idle-up to air cleaner hose

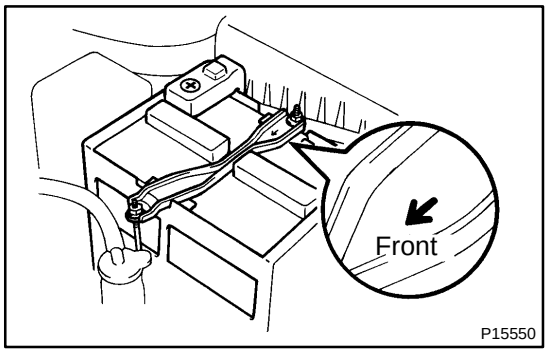

34. INSTALL BATTERY

HINT:

Face the arrow mark on the hold-down clamp forward.

35. FILL WITH ENGINE COOLANT
36. FILL WITH ENGINE OIL
37. START ENGINE AND CHECK FOR LEAKS
38. INSTALL ENGINE UNDER COVERS
39. INSTALL ENGINE HOOD
40. RECHECK ENGINE COOLANT AND OIL LEVELS

FRONT DRIVE SHAFT (7A-FE)

COMPONENTS

SA1W3-02

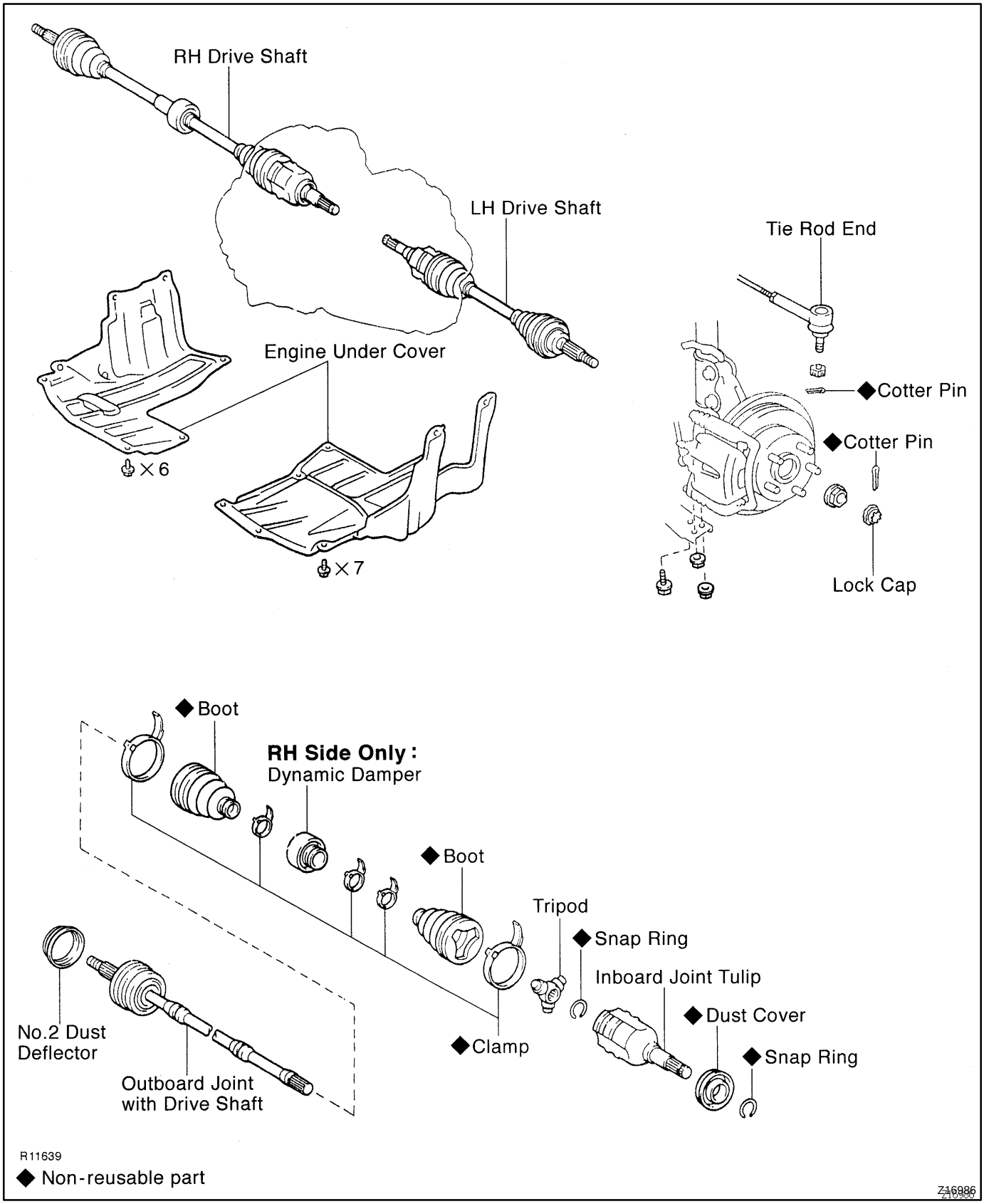

SA12R-02

INSTALLATION

Installation is in the reverse order of removal (See page SA-26).

AFTER INSTALLATION, CHECK ABS SPEED SENSOR SIGNAL (See page DI-308) AND FRONT WHEEL ALIGNMENT (See page SA-4)

SF0V3-02

INSTALLATION

1. INSTALL FUEL PRESSURE REGULATOR

(a) Apply a light coat of gasoline to a new O-ring, and install it to the pressure regulator.

(b) Attach the pressure regulator to the delivery pipe.

(c) Check that the pressure regulator rotates smoothly.

NOTICE:

If it does not rotate smoothly, the O-ring may be pinched, so remove the pressure regulator and perform again steps (b) and (c) above.

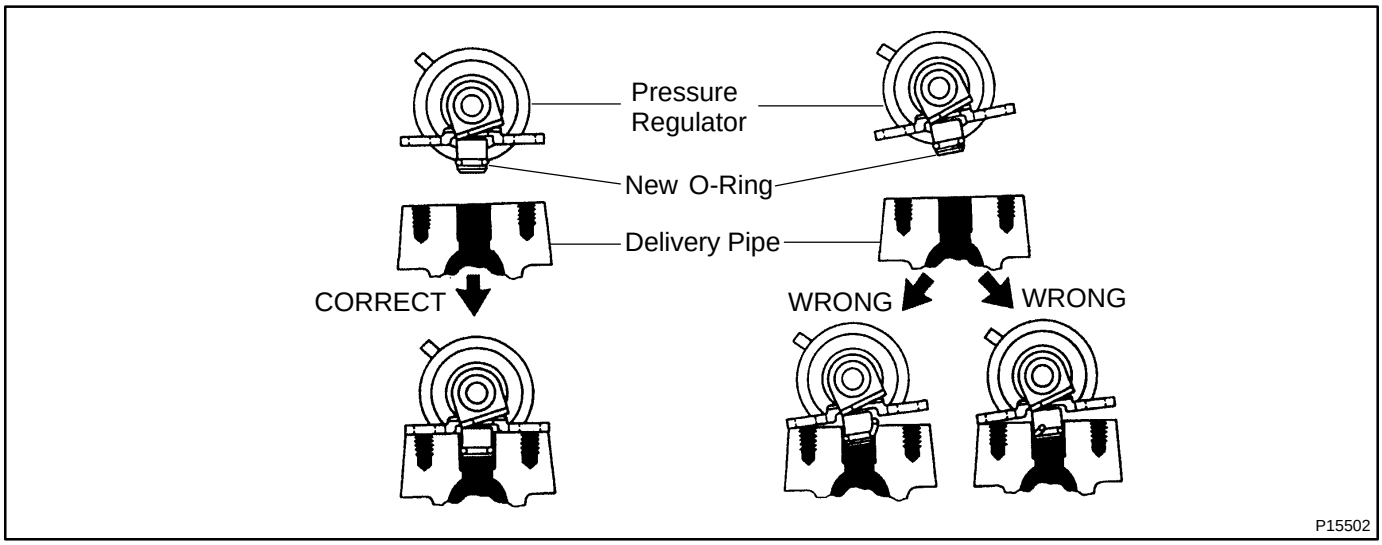

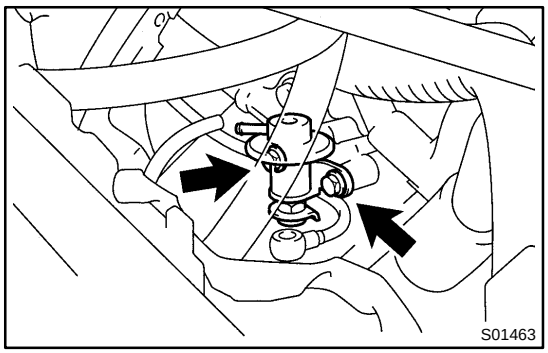

(d) Install the pressure regulator with the 2 bolts.
Torque: 5.4 N·m (55 kgf·cm, 48 in.·lbf)

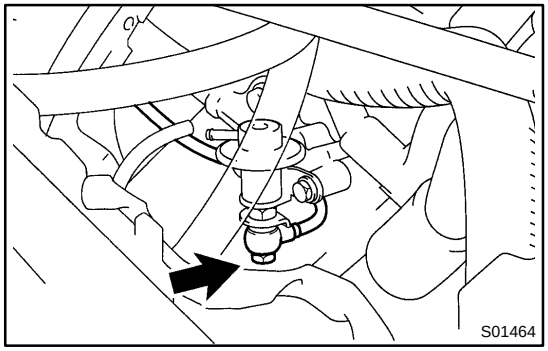

2. CONNECT FUEL RETURN PIPE TO FUEL PRESSURE REGULATOR

Install the return pipe with 2 new gaskets and the union bolt.
Torque: 19 N·m (195 kgf·cm, 14 ft·lbf)

3. CONNECT AIR HOSE TO FUEL PRESSURE REGULATOR

4. CHECK FOR FUEL LEAKS
(See page SF-1)

SF0WB-02

INSTALLATION

Installation is in the reverse order of removal. (See page SF-11)

CH063-02

INSTALLATION

Installation is in the reverse order of removal (See page CH-7).

SF0V8-03

INSTALLATION

1. INSTALL INJECTORS AND DELIVERY PIPE

(a) California:
Install new insulator and grommet to each injector.

(b) Except California:
Install a new grommet to each injector.

(c) California:
Apply a light coat of gasoline onto 2 new O-rings, and install them to each injector.

(d) Except California:
Apply a light coat of gasoline onto a new O-ring, and install it to each injector.

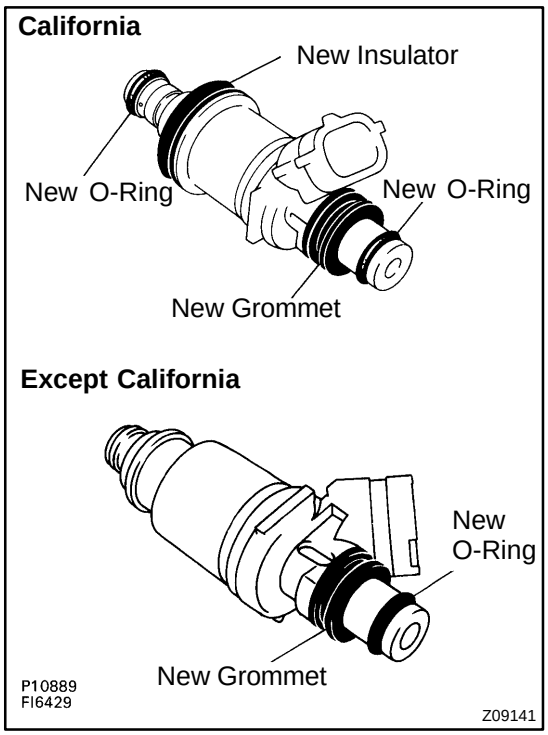

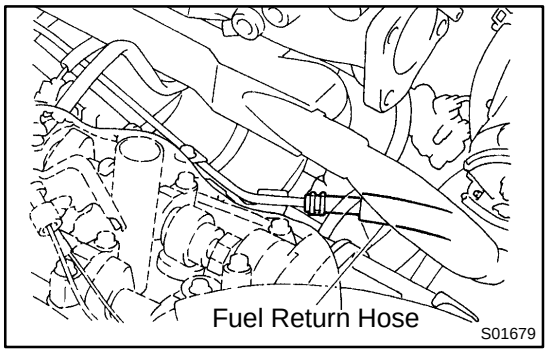

(e) Place the delivery pipe between the intake manifold and cylinder head.

(f) Connect the fuel return hose to the return pipe.

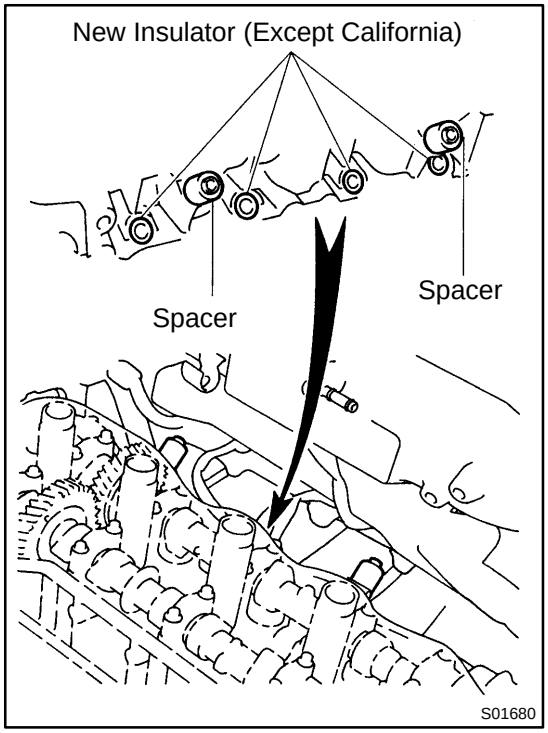

(g) Install these parts to the cylinder head:
(1) 2 spacers
(2) Except California:
4 new insulators

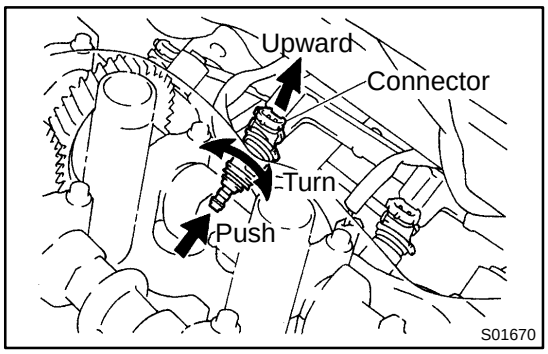

(h) While turning the injector left and right, install it to the delivery pipe. Install the 4 injectors.

(i) Position the injector connector upward.

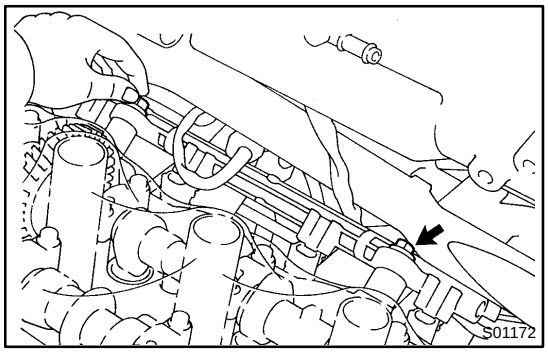

(j) Attach the 4 injectors and delivery pipe assembly to the cylinder head.

(k) Temporarily install the 2 bolts holding the delivery pipe to the cylinder head.

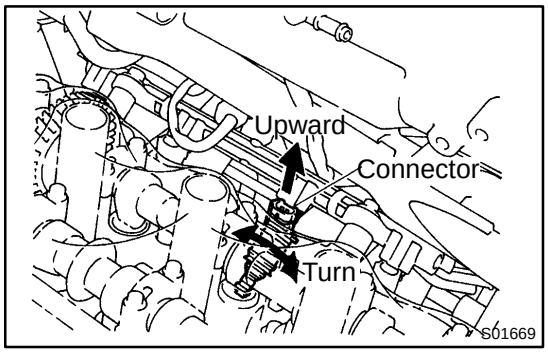

(l) Check that the injectors rotate smoothly.

HINT:

If injectors do not rotate smoothly, the probable cause is incorrect installation of O-rings. Replace the O-rings.

(m) Position the injector connector upward.

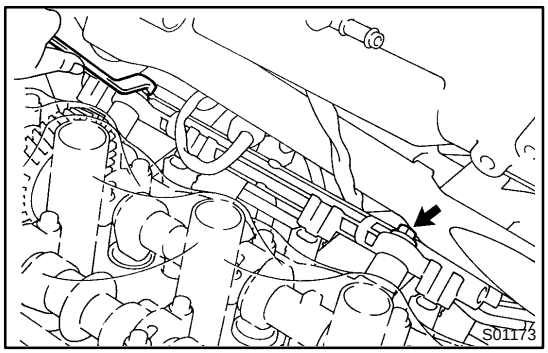

(n) Tighten the 2 bolts holding the delivery pipe to the cylinder head.

Torque: 13 N·m (130 kgf·cm, 9 ft·lbf)

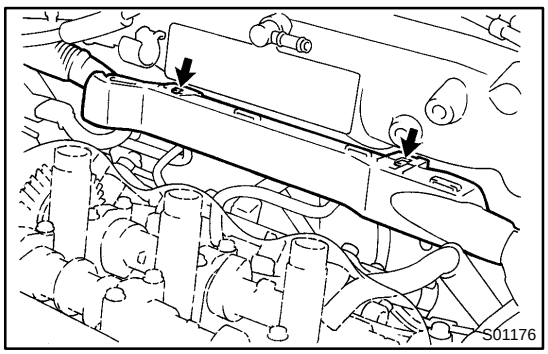

(o) Install the engine wire protector to the 2 brackets on the front side of the intake manifold.

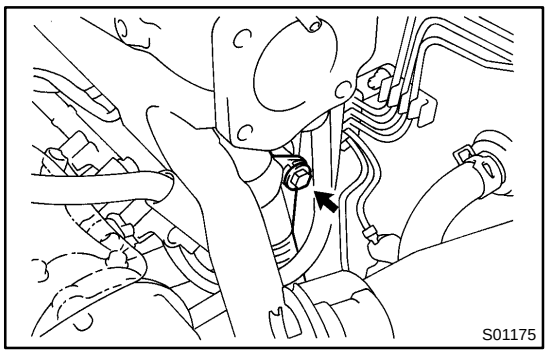

(p) Install the engine wire protector to LH side of the intake manifold with the bolt.

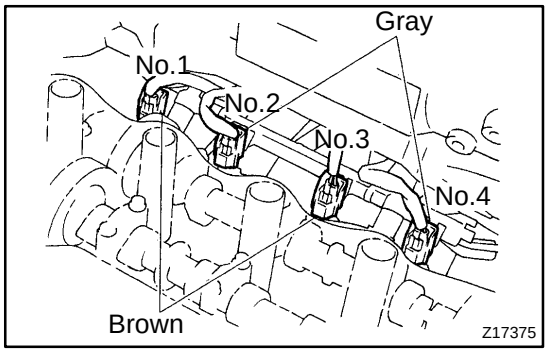

(q) Connect the 4 injector connectors.

HINT:

The No.1 and No.3 injector connectors are brown, and the No.2 and No.4 injector connectors are gray.

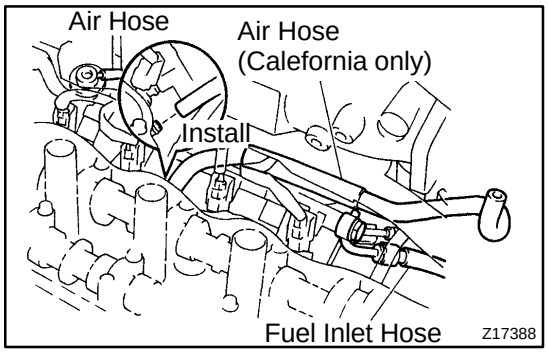

(r) Connect the fuel inlet hose to the delivery pipe with 2 new gaskets and the union bolt.

Torque: 34 N·m (350 kgf·cm, 25 ft·lbf)

NOTICE:

Be careful of the fuel inlet hose installation direction.

(s) Connect the air hose to the fuel pressure regulator.

(t) California only:
Install the air hose for the air assist system to the intake manifold port.

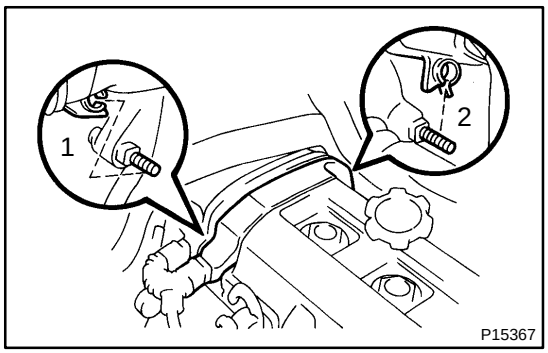

2. INSTALL CYLINDER HEAD COVER

(a) Install the cylinder head cover.
(See page EM-53)

(b) Install the oil filler cap.

(c) Install the engine wire protector to the 2 mounting bolts of the No.2 timing belt cover in the sequence shown.

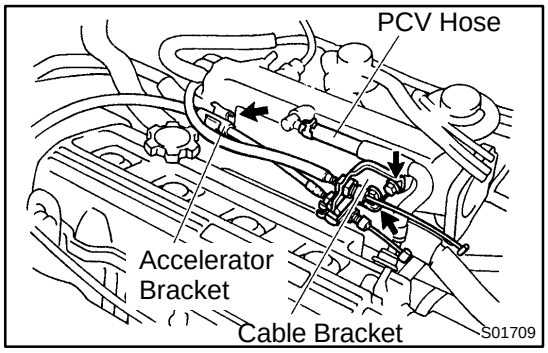

(d) Connect the PCV hose to the intake manifold.

(e) Install the cable bracket with the 2 bolts.

(f) Install the accelerator cable to the clamp on the intake manifold.

(g) Connect the 4 high-tension cords to the spark plugs.

(h) Install the 4 high-tension cords to the clamp on the cylinder head cover.

3. **INSTALL THROTTLE BODY**
   (See page SF-37)
4. **CHECK FOR FUEL LEAKS**
   (See page SF-1)

LU088-03

INSTALLATION

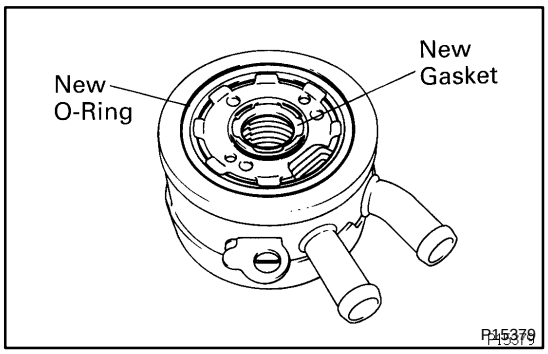

1. INSTALL OIL COOLER

(a) Clean the oil cooler contact surface on the oil cooler mounting.

(b) Install a new O-ring to the oil cooler.

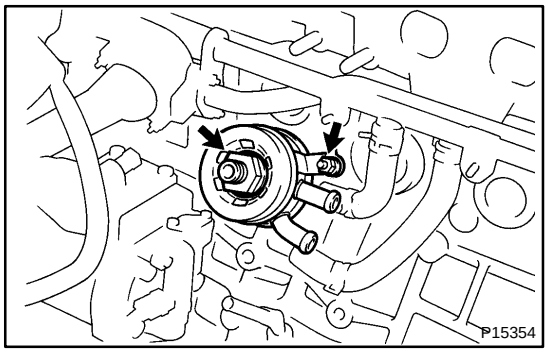

(c) Temporarily install the oil cooler with the nut.

(d) Apply a light coat of engine oil on the threads and under the head of the relief valve.

(e) Install the plate washer and relief valve.

Torque: 78 N·m (800 kgf·cm, 58 ft·lbf)

(f) Tighten the nut.

Torque: 7.8 N·m (80 kgf·cm, 69 in.·lbf)

(g) Connect the 2 water bypass hoses to the oil cooler.

2. INSTALL OIL FILTER

3. INSTALL WATER BYPASS HOSE HEAT PROTECTOR

Install the heat protector with the bolt and 2 nuts.

4. INSTALL EXHAUST MANIFOLD AND FRONT TWC ASSEMBLY (See page EM-1 14)

5. INSTALL OIL DIPSTICK

6. INSTALL GENERATOR (See page CH-20)

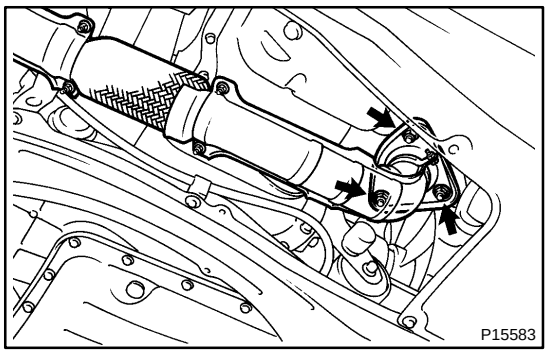

7. CONNECT FRONT EXHAUST PIPE TO FRONT TWC

(a) Place a new gasket to the exhaust pipe.

(b) Using a 14 mm deep socket wrench, connect the exhaust pipe to the TWC with 3 new nuts.

Torque: 62 N·m (630 kgf·cm, 46 ft·lbf)

8. FILL WITH ENGINE COOLANT

9. START ENGINE AND CHECK FOR LEAKS

10. CHECK ENGINE OIL LEVEL

LU084-03

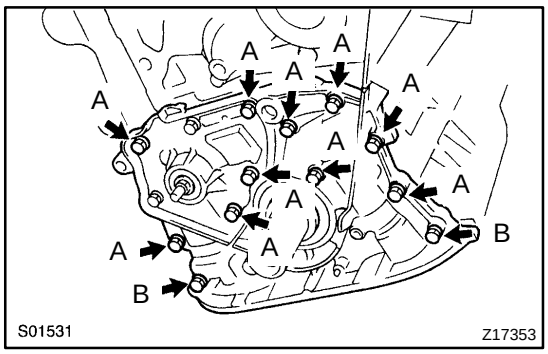

INSTALLATION

1. INSTALL OIL PUMP

Install a new gasket and the oil pump with the 12 bolts. Uniformly tighten the bolts in several passes.

Torque: 8.8 N·m (90 kgf·cm, 78 in.·lbf)

HINT:

Each bolt length is indicated in the illustration.

Bolt length:

25 mm (0.98 in.) for A

35 mm (1.38 in.) for B

2. INSTALL OIL PUMP PULLEY
(See page EM-19)

3. INSTALL CRANKSHAFT TIMING PULLEY
(See page EM-19)

4. INSTALL NO.2 IDLER PULLEY
(See page EM-19)

5. INSTALL TIMING BELT
(See page EM-19)

6. REMOVE ENGINE SLING DEVICE

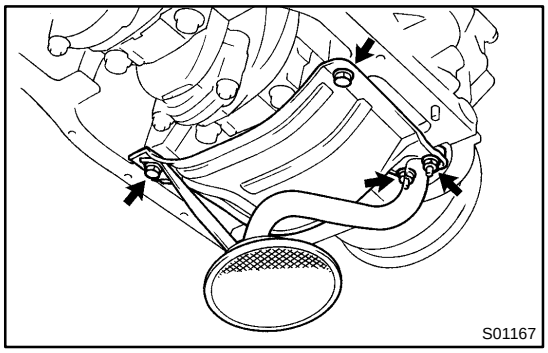

7. INSTALL OIL PAN BAFFLE PLATE AND OIL STRAINER

Install a new gasket, the oil strainer and baffle plate with the 2 bolts and 2 nuts.

Torque: 5.4 N·m (55 kgf·cm, 48 in.·lbf)

8. INSTALL OIL PAN

(a) Remove any old packing (FIPG) material and be careful not to drop any oil on the contact surfaces of the oil pan and cylinder block.

- Using a razor blade and gasket scraper, remove all the old packing (FIPG) material from the gasket surfaces and sealing groove.
- Thoroughly clean all components to remove all the loose material.
- Using a non-residue solvent, clean both sealing surfaces.

NOTICE:

Do not use a solvent which will affect the painted surfaces.

(b) Apply seal packing to the oil pan as shown in the illustration.

Seal packing:

Part No. 08826-00080 or equivalent

- Install a nozzle that has been cut to a 3 - 5 mm (0.12 - 0.20 in.) opening.
- Parts must be assembled within 5 minutes of application. Otherwise the material must be removed and reapplied.
- Immediately remove nozzle from the tube and reinstall cap.

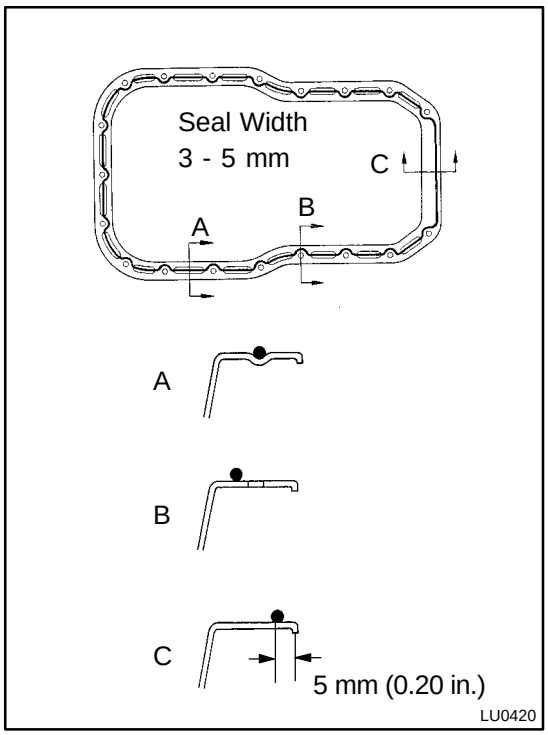

(c) Install the oil pan with the 17 bolts and 2 nuts. Uniformly tighten the bolts and nuts in several passes.
Torque: 5.4 N·m (55 kgf·cm, 48 in.·lbf)
(d) Install the dipstick.

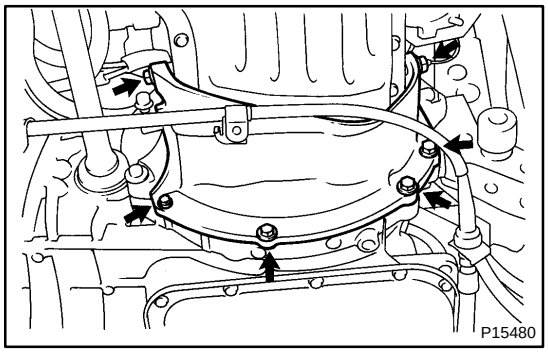

9. INSTALL REAR END PLATE STIFFENER
(a) Install the plate stiffener with the 6 bolts. Alternately tighten the bolts in several passes.
Torque:
12 mm head
21 N·m (210 kgf·cm, 15 ft·lbf)
14 mm head
44 N·m (440 kgf·cm, 32 ft·lbf)

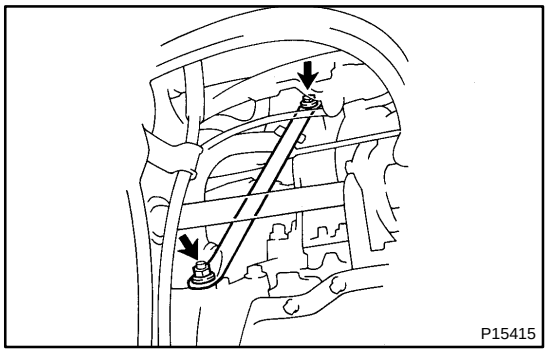

(b) Install the intake manifold stay with the bolt and nut.
Torque:
Bolt
21 N·m (210 kgf·cm, 15 ft·lbf)
Nut
44 N·m (440 kgf·cm, 32 ft·lbf)

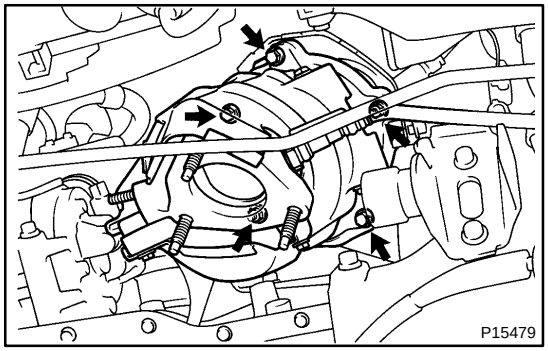

10. INSTALL FRONT TWC
(a) Place the cushion, retainer and a new gasket on the TWC.
(b) Install the TWC with the 3 bolts and 2 nuts.
Torque: 29 N·m (300 kgf·cm, 21 ft·lbf)

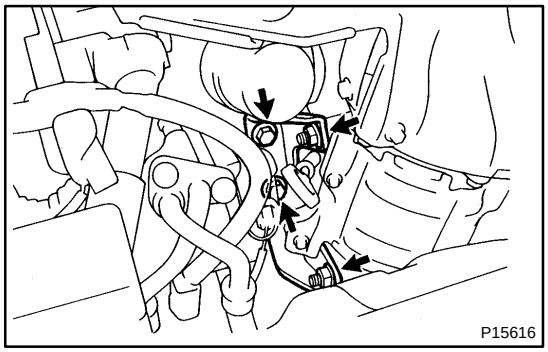

(c) Install the RH exhaust manifold stay with the 2 bolts and 2 new nuts.
Torque: 42 N·m (425 kgf·cm, 31 ft·lbf)
(d) Connect the oxygen sensor (bank 1 sensor 2) connector.
11. INSTALL ENGINE MOUNTING CENTER MEMBER
(See page EM-81)
12. INSTALL FRONT EXHAUST PIPE
(See page EM-81)
13. FILL WITH ENGINE OIL
14. START ENGINE AND CHECK FOR OIL LEAKS

15. RECHECK ENGINE OIL LEVEL

16. INSTALL ENGINE UNDER COVERS

CO0GN-02

INSTALLATION

1. INSTALL NO.1 COOLING FAN TO RADIATOR

Install the cooling fan with the 4 bolts.

Torque: 5.0 N·m (50 kgf·cm, 43 in.·lbf)

2. w/ A/C:

INSTALL NO.2 COOLING FAN TO RADIATOR

Install the cooling fan with the 3 bolts.

Torque: 5.0 N·m (50 kgf·cm, 43 in.·lbf)

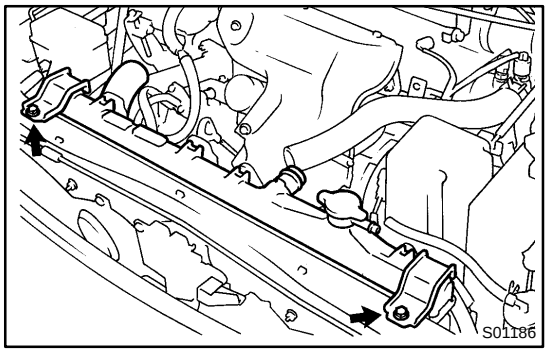

3. INSTALL RADIATOR

(a) Install these hoses:
- Lower radiator hose
- 2 A/T oil cooler hoses

(b) Install the 2 lower radiator supports to the radiator.

(c) Attach the 2 lower radiator supports on the radiator to the body brackets.

(d) Install the 2 upper radiator supports with the 2 bolts.

Torque: 13 N·m (130 kgf·cm, 9 ft·lbf)

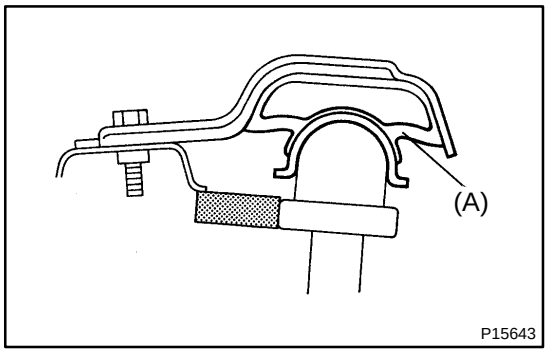

HINT:

After installation, check that the rubber cushion (A) of the support is not depressed.

(e) Connect these hoses:
- Upper radiator hose to radiator
- Lower radiator hose to water inlet
- Radiator reservoir hose to radiator
- 2 A/T oil cooler hoses to oil cooler pipes

(f) Connect the connectors and wire:
- No.1 cooling fan connector
- w/ A/C:
  No.2 cooling fan connector
- ECT switch connector for electric cooling fan
- Wire to clamp on No.1 cooling fan

4. CANADA only:

INSTALL RELAY BOX (FOR DAYTIME RUNNING LIGHT SYSTEM)

Install the relay box with the 2 bolts.

5. FILL WITH ENGINE COOLANT

6. START ENGINE AND CHECK FOR COOLANT LEAKS

ST07W-02

INSTALLATION

Installation is in the reverse order of removal (See page ST-4).

CO0GG-02

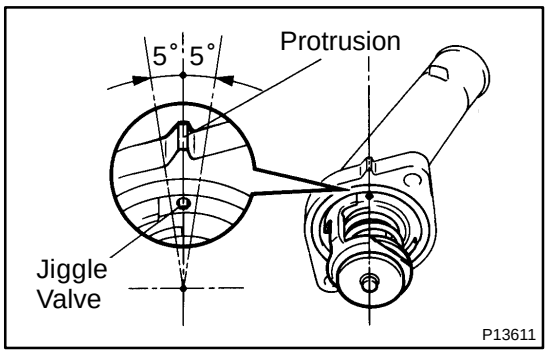

INSTALLATION

1. PLACE THERMOSTAT IN WATER INLET

(a) Install a new gasket to the thermostat.

(b) Align the jiggle valve of the thermostat with the protrusion of the water inlet, and insert the thermostat in the water inlet.

HINT:

The jiggle valve may be set within 5° of either side of the prescribed position.

2. INSTALL WATER INLET AND THERMOSTAT

Install the water inlet and thermostat with the 2 nuts.

Torque: 8.8 N·m (90 kgf·cm, 78 in.·lbf)

3. INSTALL OIL FILTER

(See page LU-2)

4. FILL WITH ENGINE COOLANT

5. START ENGINE AND CHECK FOR LEAKS

6. CHECK ENGINE OIL LEVEL

SF0VG-02

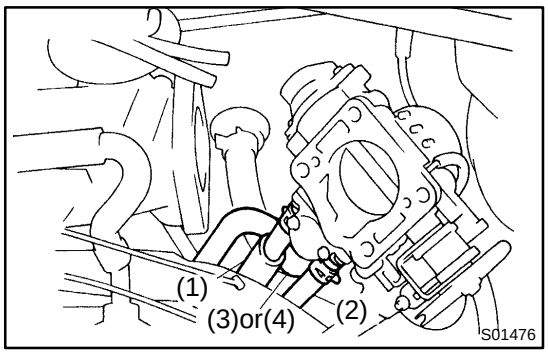

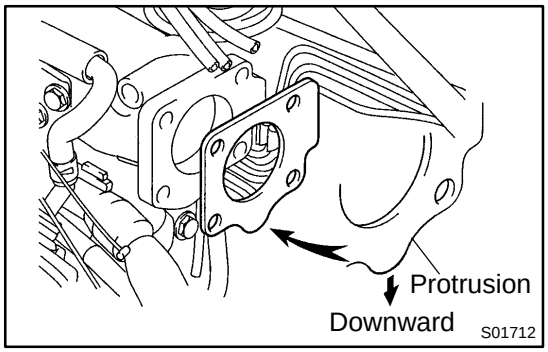

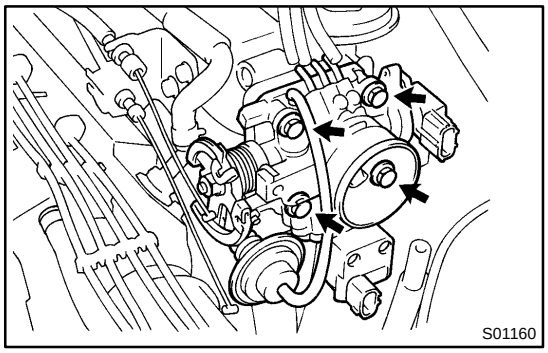

INSTALLATION

1. INSTALL THROTTLE BODY

(a) Connect these hoses to the throttle body:
  (1) Water bypass hose (from water outlet)
  (2) Water bypass hose (from water bypass pipe)
  (3) California:
    Air hose (from intake manifold) for air assist system
  (4) Except California:
    Air hose (from air tube) for PS idle-up

(b) Attach a new gasket to the intake manifold, facing the protrusion downward.

  (1) Type A:
    Install the throttle body with the 4 bolts.
  Torque: 19 N·m (195 kgf·cm, 14 ft·lbf)

HINT:

Different bolt lengths are used for the upper and lower sides.

  Bolt length:
  Upper side
    45 mm (1.77 in.)
  Lower side
    55 mm (2.17 in.)

  (2) Type B:
    Install the throttle body with the 2 bolts and 2 nuts.
  Torque: 19 N·m (195 kgf·cm, 14 ft·lbf)

(c) Connect these hoses:
- Vacuum hose (from upper port of TVV for EVAP) to port ”P” of throttle body
- Vacuum hose (from port ”Q” of EGR vacuum modulator) to port ”E” of throttle body
- Vacuum hose (from port ”R” of EGR vacuum modulator) to port ”R” of throttle body

(d) Connect these connectors:
- Throttle position sensor connector
- IAC valve connector

2. CONNECT CONTROL CABLES TO THROTTLE BODY

Connect these cables:
- Accelerator cable
- A/T throttle control cable

3. **INSTALL AIR CLEANER CAP**
   (See page EM-81)
4. **FILL WITH ENGINE COOLANT**

VSV FOR EVAPORATIVE EMISSION (EVAP)

COMPONENTS

SF0VP-02

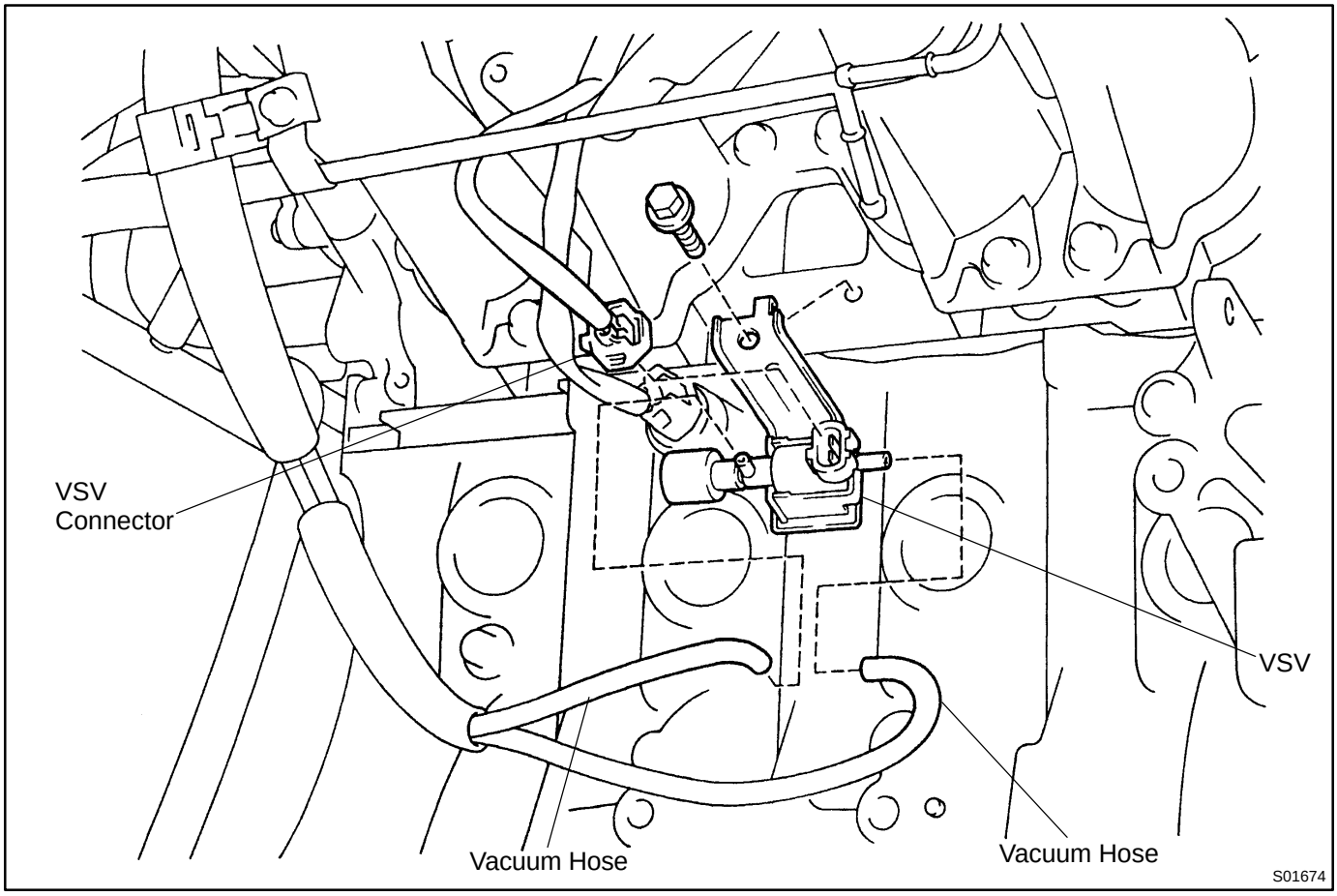

EM0J6-03

INSTALLATION

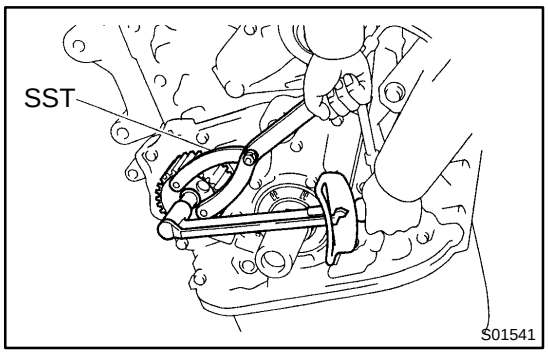

1. INSTALL OIL PUMP PULLEY

(a) Align the cutouts of the pulley and shaft, and slide on the pulley.

(b) Using SST, install the pulley nut.
SST 09960-10010 (09962-01000, 09963-00500)
Torque: 24 N·m (245 kgf·cm, 18 ft·lbf)

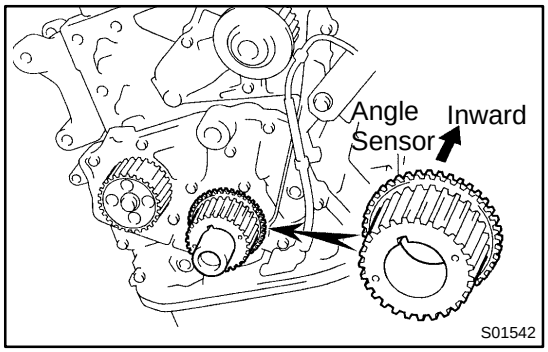

2. INSTALL CRANKSHAFT TIMING PULLEY

(a) Align the timing pulley set key with the key groove of the pulley.

(b) Slide on the timing pulley, facing the angle sensor inward.

NOTICE:
Do not scratch the angle sensor of the timing pulley.

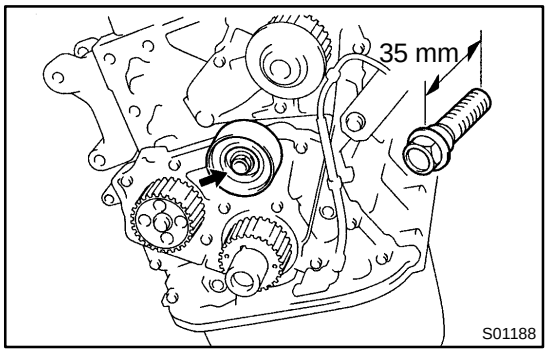

3. INSTALL NO.2 IDLER PULLEY

(a) Install the pulley with the bolt.
Torque: 42 N·m (425 kgf·cm, 31 ft·lbf)

HINT:
Use the 35 mm (1.38 in.) long bolt.

(b) Check that the idler pulley moves smoothly.

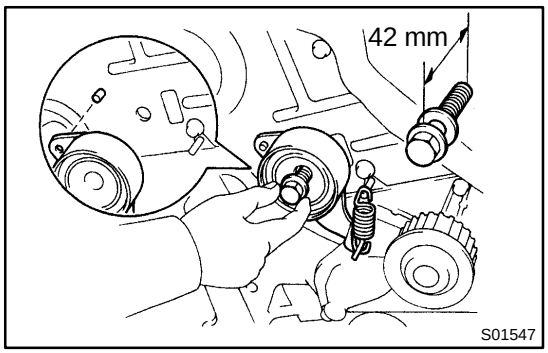

4. TEMPORARILY INSTALL NO.1 IDLER PULLEY AND TENSION SPRING

(a) Align the bracket pin hole with the pivot pin.

(b) Install the pulley with the bolt. Do not tighten the bolt yet.

HINT:
Use the 42 mm (1.65 in.) long bolt.

(c) Install the tension spring.

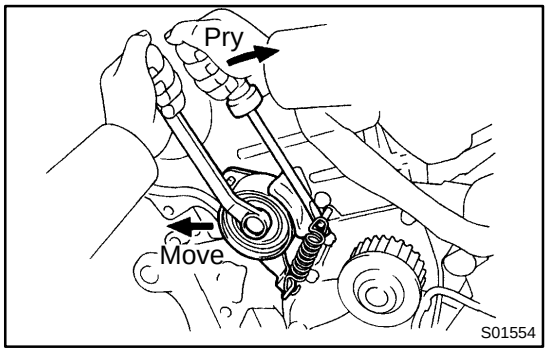

(d) Pry the pulley toward the left as far as it will go, and tighten the bolt.

(e) Check that the idler pulley moves smoothly.

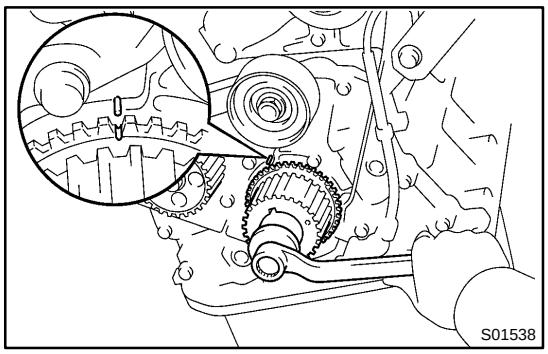

5. TEMPORARILY INSTALL TIMING BELT

NOTICE:

The engine should be cold.

(a) Using the crankshaft pulley bolt, turn the crankshaft and align the timing marks of the crankshaft timing pulley and oil pump body.

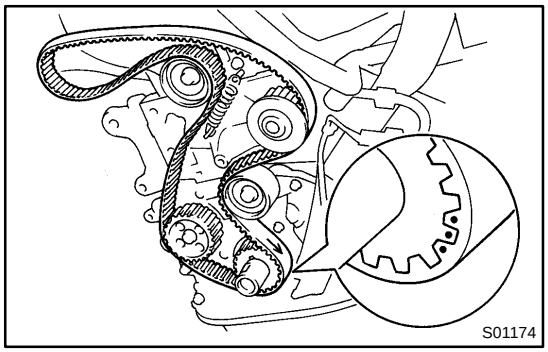

(b) Remove any oil or water on the crankshaft pulley, oil pump pulley, water pump pulley, No.1 idler pulley and No.2 idler pulley, and keep them clean.

(c) Install the timing belt on the crankshaft timing pulley, oil pump pulley, No.1 idler pulley, water pump pulley and No.2 idler pulley.

HINT:

(When re-using timing belt): Align the points marked during removal, and install the belt with the arrow pointing in the direction of engine revolution.

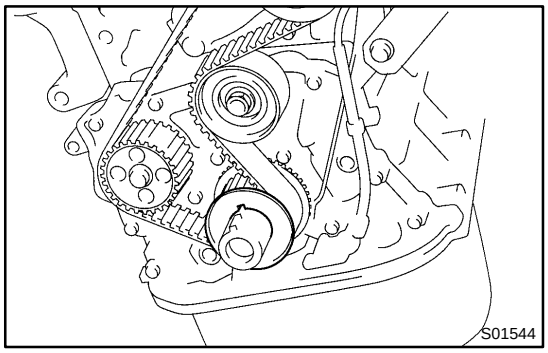

6. INSTALL TIMING BELT GUIDE

Install the guide, facing the cup side outward.

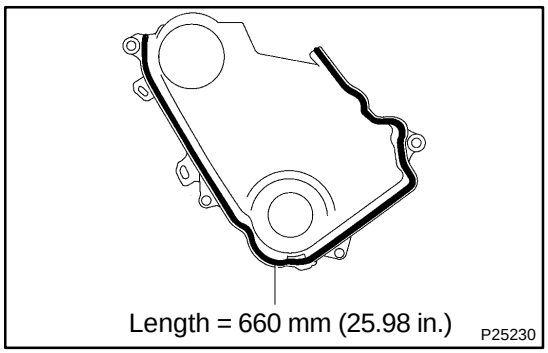

7. INSTALL NO.1 TIMING BELT COVER

(a) Check that the timing belt cover gasket has no cracks or peeling, etc.

If the gasket has cracks or peeling, etc., replace it using these steps:

(1) Using a screwdriver and gasket scraper, remove all the old gasket material.

(2) Thoroughly clean all components to remove all the loose material.

(3) Remove the backing paper from a new gasket and install the gasket evenly to the part of the belt cover shaded black in the illustration.

(4) After installing the gasket, press down on it so that the adhesive firmly sticks to the belt cover.

(b) Install the timing belt cover with the 4 bolts.

(c) Install the clamp of the crankshaft position sensor wire to the timing belt cover.

(d) Install the crankshaft position sensor wire to the clamp on the timing belt cover.

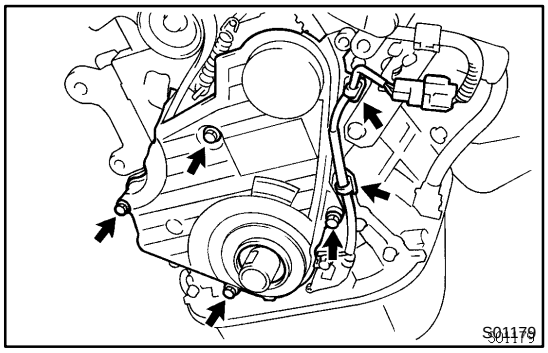

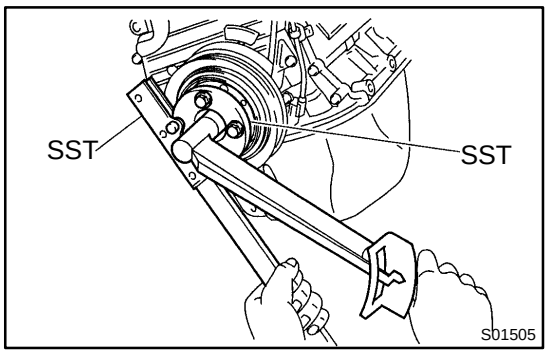

8. INSTALL CRANKSHAFT PULLEY

(a) Align the pulley set key with the key groove of the pulley, and slide on the pulley.

(b) Using SST (and bolt), install the pulley bolt.

SST 09213-54015 (91651-60855 for type A), 09330-00021

Bolt: Part No. 91121-40665 for type B

Torque: 108 N·m (1,100 kgf·cm, 80 ft·lbf)

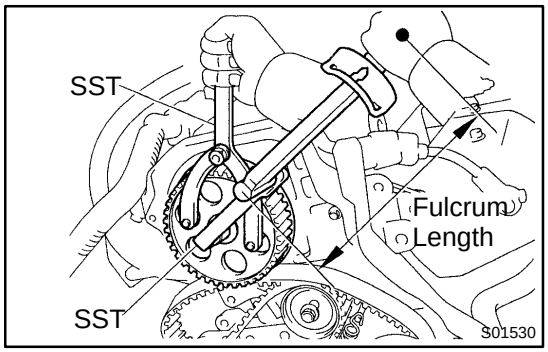

9. INSTALL CAMSHAFT TIMING PULLEY

(a) Align the camshaft knock pin with the knock pin groove of the pulley, and slide on the timing pulley.

(b) Using SST, install the pulley bolt.

SST 09249-63010, 09960-10010 (09962-01000, 09963-01000)

Torque:

54 N·m (550 kgf·cm, 40 ft·lbf)

37 N·m (380 kgf·cm, 27 ft·lbf) for SST

HINT:

Use a torque wrench with a fulcrum length of 340 mm (13.39 in.).

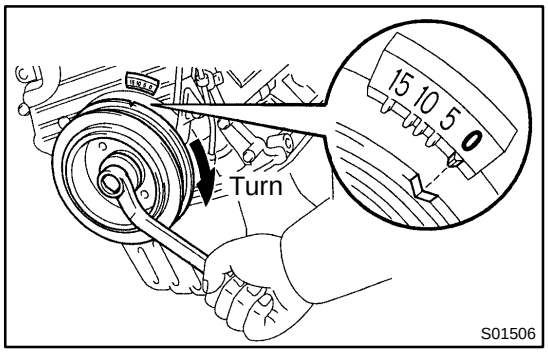

10. SET NO.1 CYLINDER TO TDC/COMPRESSION

(a) Turn the crankshaft pulley, and align its groove with timing mark ”0” of the No.1 timing belt cover.

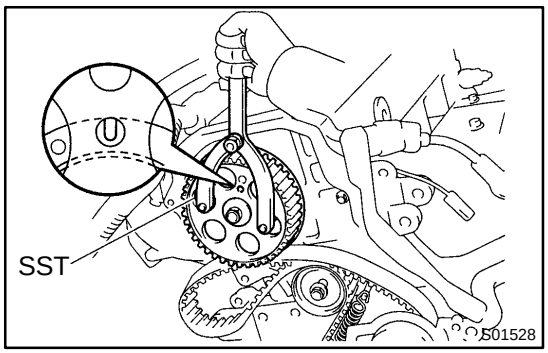

(b) Using SST, turn the camshaft, and align the hole of the camshaft timing pulley with the timing mark of the bearing cap.

SST 09960-10010 (09962-01000, 09963-01000)

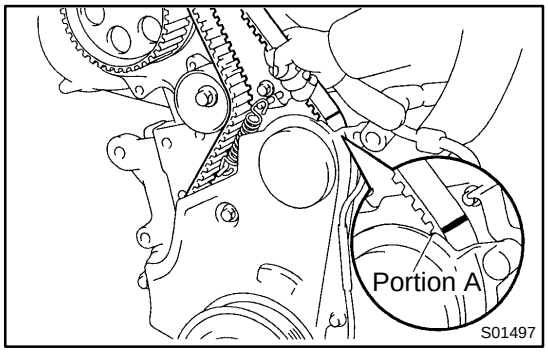

11. CONNECT TIMING BELT TO CAMSHAFT TIMING PULLEY

HINT:

- (When re-using timing belt):
  Check that the matchmark on the timing belt matches portion A of the No.1 timing belt cover.

If the matchmark does not align, shift the meshing of the timing belt and crankshaft timing pulley until they align.

(See page EM-13)

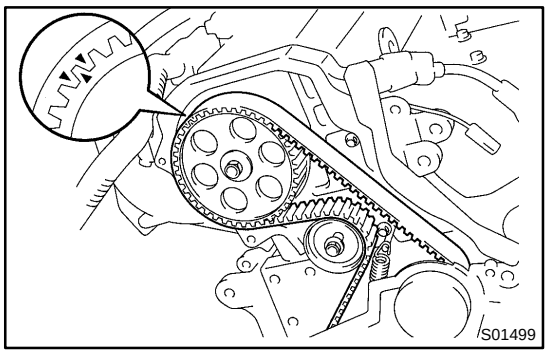

- Align the matchmarks of the timing belt and camshaft timing pulley.

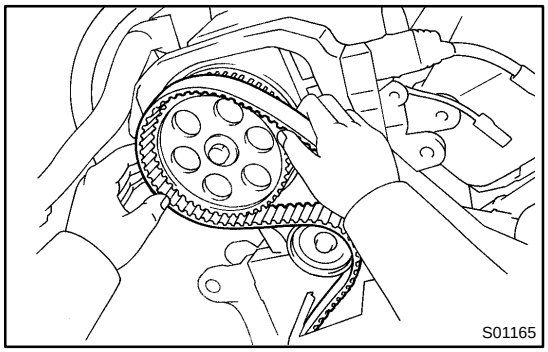

(a) Remove any oil or water on the camshaft timing pulley, and keep it clean.
(b) Connect the timing belt to the camshaft timing pulley, and checking the tension between the crankshaft timing pulley and camshaft timing pulley.

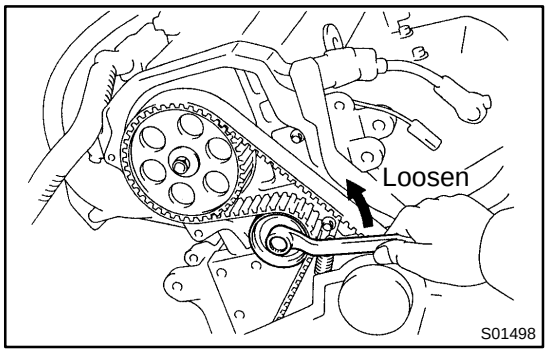

12. CHECK VALVE TIMING

(a) Loosen the No.1 idler pulley bolt 1/2 turn.

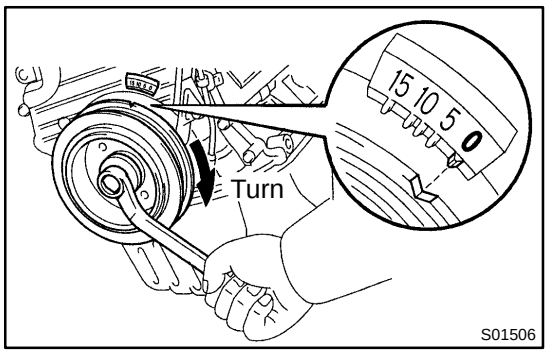

(b) Slowly turn the crankshaft pulley 2 revolutions TDC to TDC.

NOTICE:
Always turn the crankshaft pulley clockwise.

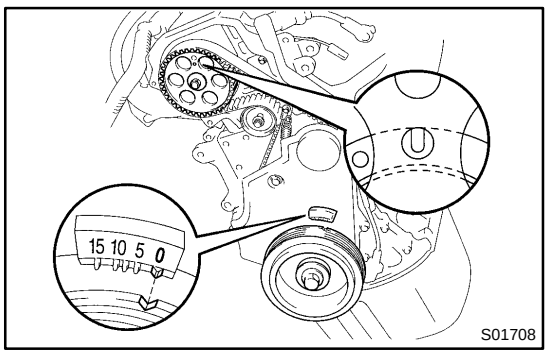

(c) Check that each pulley aligns with the timing marks as shown in the illustration.

If the timing marks do not align, remove the timing belt and reinstall it.

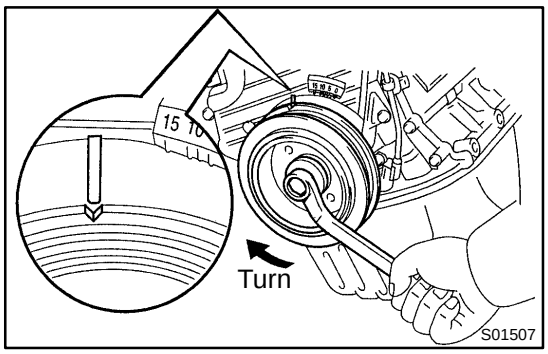

(d) Slowly turn the crankshaft pulluy 1 and 7/8 revolutions, and align its groove with the mark at 45° BTDC (for No.1 cylinder) of the No.1 timing belt cover.

NOTICE:

Always turn the crankshaft pulley clockwise.

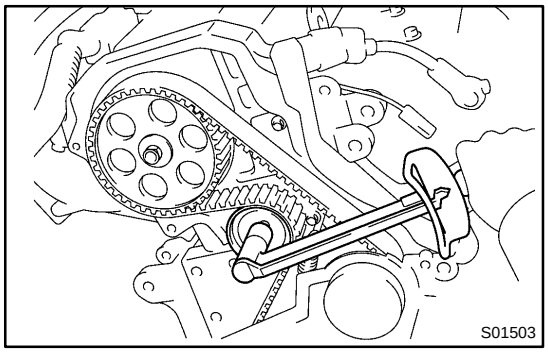

(e) Tighten the mounting bolt of the No.1 idler pulley.
Torque: 42 N·m (425 kgf·cm, 31 ft·lbf)

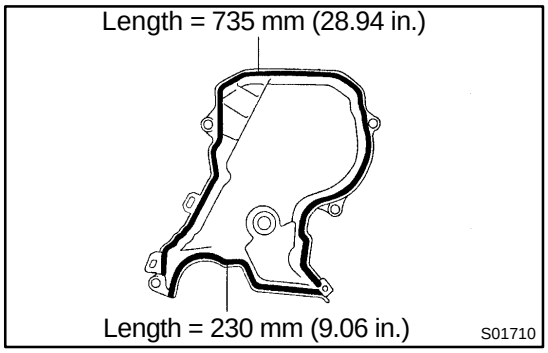

13. INSTALL NO.2 TIMING BELT COVER

(a) Check that the timing belt cover gaskets have no cracks or peeling, etc.

If the gasket has cracks or peeling, etc., replace it using these steps:

(1) Using a screwdriver and gasket scraper, remove all the old gasket material.
(2) Thoroughly clean all components to remove all the loose material.
(3) Remove the backing paper from a new gasket and install the gasket evenly to the part of the belt cover shaded black in the illustration.
(4) After installing the gasket, press down on it so that the adhesive firmly sticks to the belt cover.

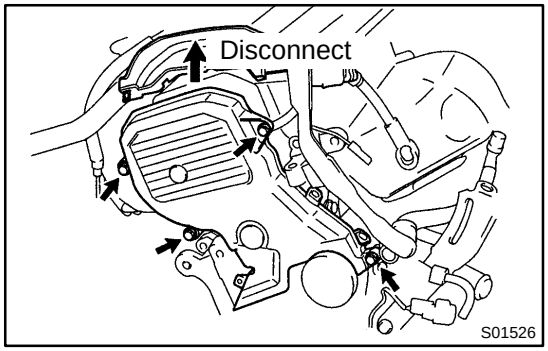

(b) Disconnect the engine wire protector between the cylinder head cover and No.3 timing belt cover.
(c) Install the belt cover with the 4 bolts.

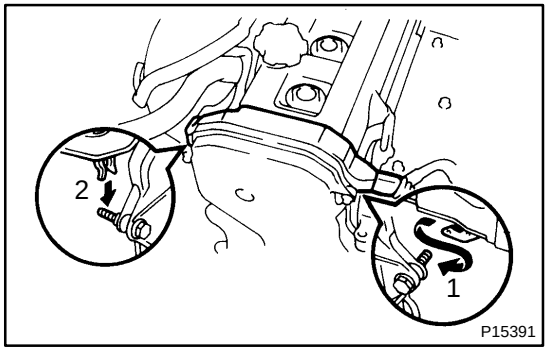

(d) Install the engine wire protector to the 2 mounting bolts of the No.2 timing belt cover in the sequence shown.
(e) Install the engine wire protector to the generator bracket and adjusting bar with the 2 bolts.

14. INSTALL SPARK PLUGS

(a) Install the 4 spark plugs.
(b) Connect the 4 high-tension cords to the spark plugs.

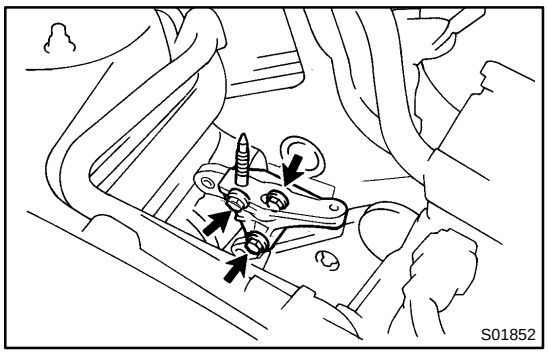

(c) Install the 4 high-tension cords to the clamp on the cylinder head cover.

15. INSTALL RH ENGINE MOUNTING BRACKET

Install the mounting bracket with the 3 bolts.

Torque: 52 N·m (530 kgf·cm, 38 ft·lbf)

HINT:

Raise the engine as far as it will go, and place the mounting bracket in position.

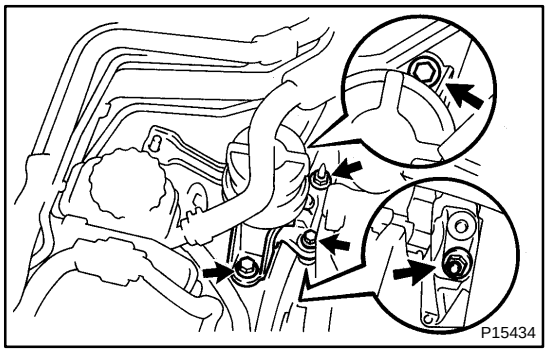

16. INSTALL RH ENGINE MOUNTING INSULATOR

(a) Attach the mounting insulator to the body and mounting bracket with the 3 bolts and 2 nuts.

(b) Tighten the 2 bolts holding the mounting insulator to the body.

Torque: 64 N·m (650 kgf·cm, 47 ft·lbf)

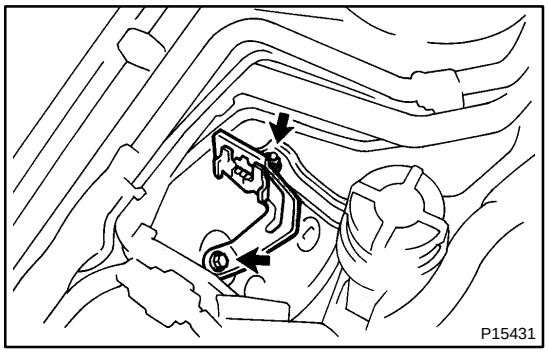

(c) Install the PS reservoir bracket with the bolt and nut.

Torque: 28 N·m (285 kgf·cm, 21 ft·lbf) for nut

(d) Install the PS reservoir to the reservoir bracket.

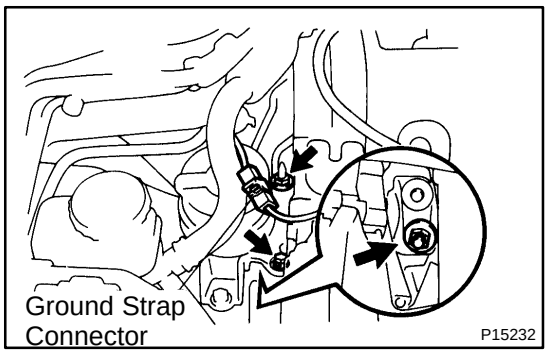

(e) Tighten the 2 nuts and bolt holding the mounting insulator to the mounting bracket.

Torque:

Bolt

37 N·m (380 kgf·cm, 27 ft·lbf)

Nut

52 N·m (530 kgf·cm, 38 ft·lbf)

17. CONNECT GROUND STRAP CONNECTOR

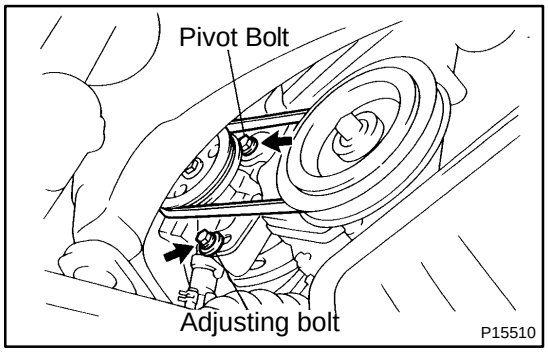

18. INSTALL PS PUMP DRIVE BELT

Install the drive belt with the adjusting bolt and pivot bolt.

19. INSTALL RH FRONT WHEEL

20. INSTALL GENERATOR

(See page CH-20)

21. INSTALL RH ENGINE UNDER COVER

CO0GC-02

INSTALLATION

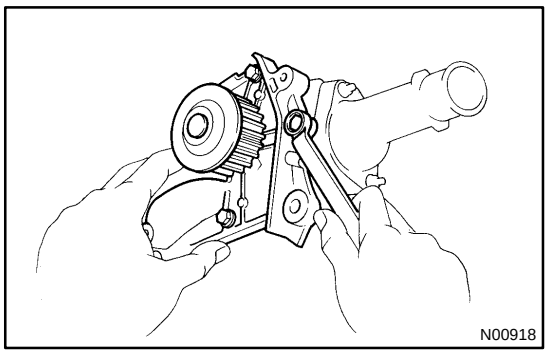

1. INSTALL WATER PUMP TO WATER PUMP COVER

Install a new gasket and the water pump with the 3 bolts.

Torque: 8.8 N·m (90 kgf·cm, 78 in.·lbf)

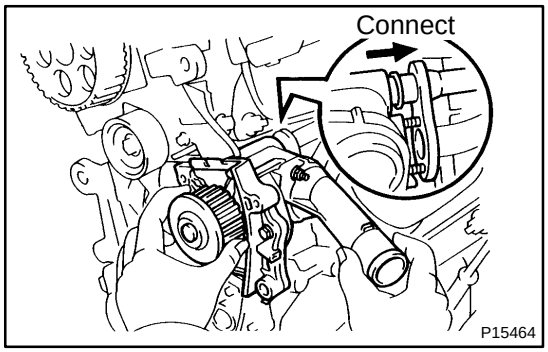

2. INSTALL WATER PUMP AND WATER PUMP COVER ASSEMBLY

(a) Install new O-ring and gasket to water pump cover.

(b) Install a new O-ring to the water bypass pipe.

(c) Apply soapy water to the O-ring on the water bypass pipe.

(d) Connect the water pump cover to the water bypass pipe. Do not install the nuts yet.

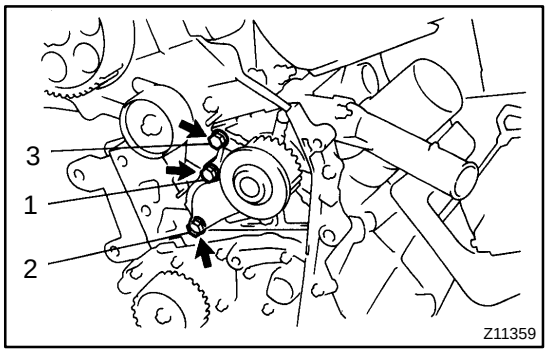

(e) Install the water pump with the 3 bolts. Tighten the bolts in the sequence shown.

Torque: 8.8 N·m (90 kgf·cm, 78 in.·lbf)

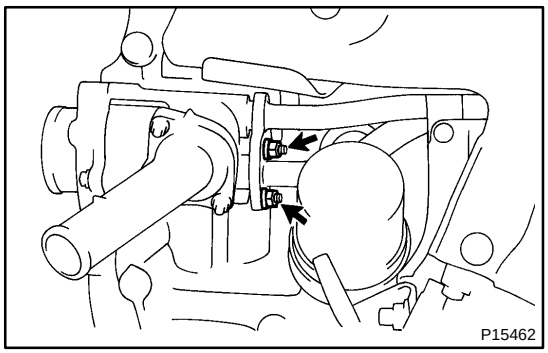

(f) Install the 2 nuts holding the water pump cover to the water bypass pipe.

Torque: 9.3 N·m (95 kgf·cm, 82 in.·lbf)

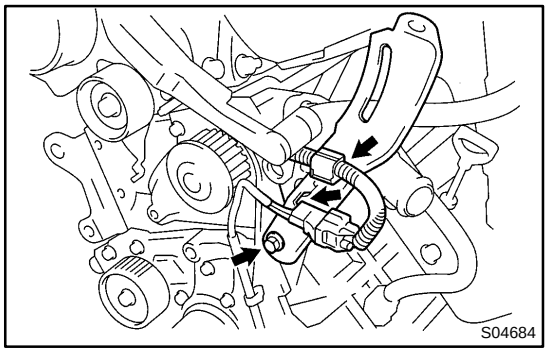

3. INSTALL GENERATOR DRIVE BELT ADJUSTING BAR

(a) Install the adjusting bar with the bolt.

Torque: 27 N·m (275 kgf·cm, 20 ft·lbf)

(b) Install the crankshaft position sensor wire to the clamp on the adjusting bar.

(c) Install the crankshaft position sensor connector to the bracket on the adjusting bar.

4. INSTALL NO.2 IDLER PULLEY

(See page EM-19)

5. INSTALL TIMING BELT TENSION SPRING
(See page EM-19)
6. CONNECT LOWER RADIATOR HOSE TO WATER INLET
7. INSTALL TIMING BELT
(See page EM-19)
8. FILL WITH ENGINE COOLANT
9. START ENGINE AND CHECK FOR COOLANT LEAKS
10. INSTALL RH ENGINE UNDER COVER

IG0GL-01

INSTALLATION

INSTALL CRANKSHAFT POSITION SENSOR

(a) Install the sensor with the bolt.
Torque: 9.3 N·m (95 kgf·cm, 82 in.·lbf)

(b) Connect the sensor connector.

EM1C7-02

INSTALLATION

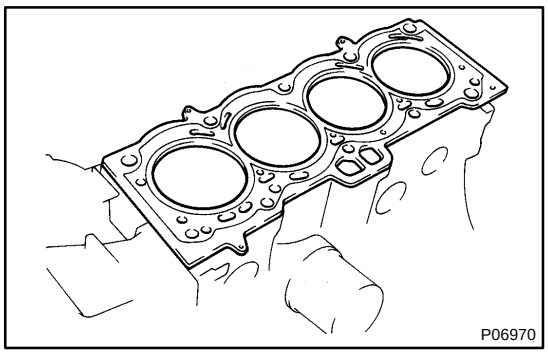

1. PLACE CYLINDER HEAD ON CYLINDER BLOCK

(a) Place a new cylinder head gasket in position on the cylinder block.

NOTICE:

Be careful of the installation direction.

(b) Place the cylinder head in position on the cylinder head gasket.

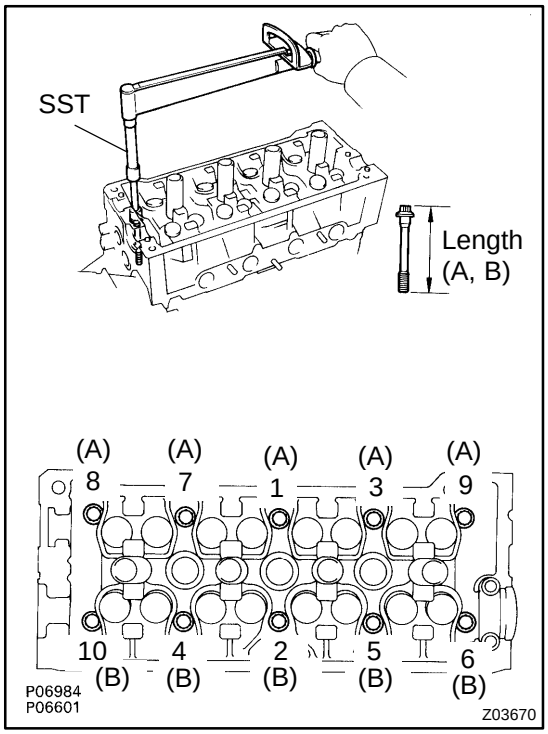

2. INSTALL CYLINDER HEAD BOLTS

HINT:

- The cylinder head bolts are tightened in 3 progressive steps (steps (b), (d) and (e)).
- If any bolts is broken or deformed, replace it.

(a) Apply a light coat of engine oil on the threads and under the heads of the cylinder head bolts.

(b) Using SST, install and uniformly tighten the cylinder head bolts, in several passes, in the sequence shown.

SST 09205-16010

Torque: 29 N·m (300 kgf·cm, 22 ft·lbf)

If any one of the bolts does not meet the torque specification, replace the bolt.

HINT:

Cylinder head bolts are in lengths of 90 mm (3.54 in.) and 108 mm (4.25 in.). Install the 90 mm (3.54 in.) bolts (A) in intake manifold side positions. Install the 108 mm (4.25 in.) bolts (B) in exhaust manifold side positions.

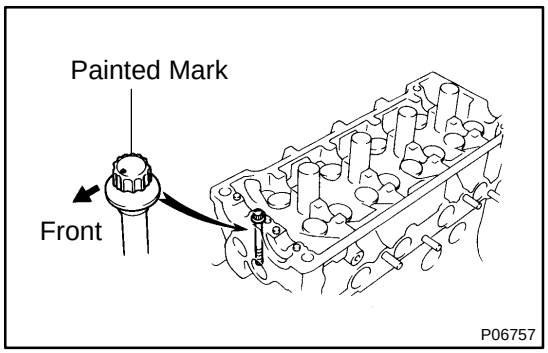

(c) Mark the front of the cylinder head bolt with paint.

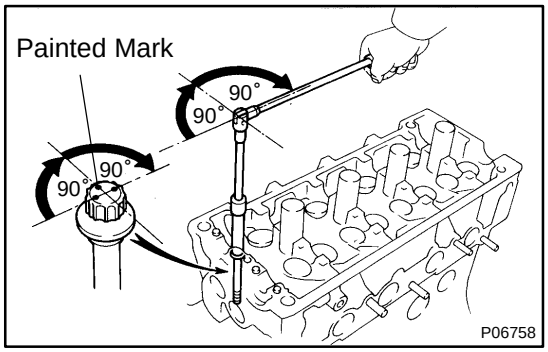

(d) Retighten the cylinder head bolts 90° in the numerical order shown.

(e) Retighten cylinder head bolts by an additional 90°.

(f) Check that the painted mark is now facing rearward.

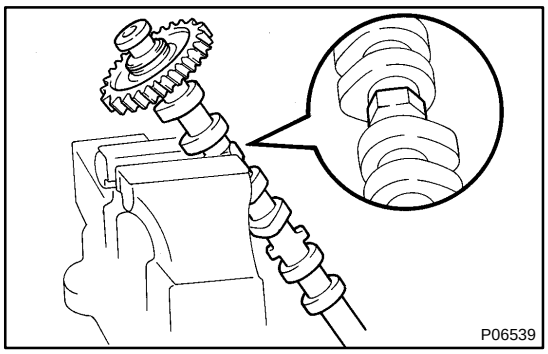

3. ASSEMBLE INTAKE CAMSHAFT

(a) Mount the hexagon wrench head portion of the camshaft in a vise.

NOTICE:

Be careful not to damage the camshaft.

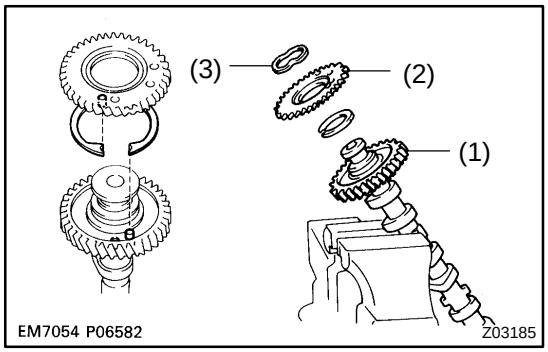

(b) Install these parts:
- (1) Camshaft gear spring
- (2) Camshaft sub-gear
- (3) Wave washer

HINT:

Align the pins on the gears with the gear spring ends.

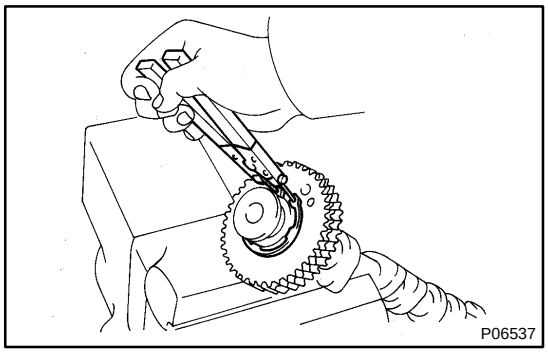

(c) Using snap ring pliers, install the snap ring.

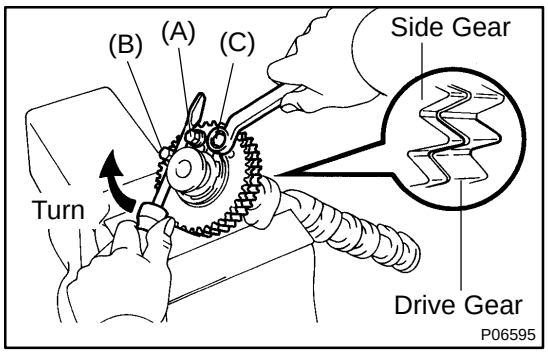

(d) Insert service bolts (A) and (B) into the service hole of the camshaft sub-gear.

(e) Using a screwdriver, align the holes of the camshaft drive gear and sub-gear by turning camshaft sub-gear clockwise, and install a service bolt (C).

NOTICE:

Be careful not to damage the camshaft.

(f) Remove service bolts (A) and (B).

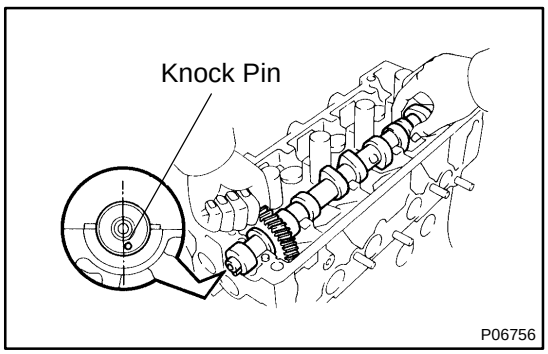

4. INSTALL EXHAUST CAMSHAFT

NOTICE:

Since the thrust clearance of the camshaft is small, the camshaft must be kept level while it is being installed. If the camshaft is not kept level, the portion of the cylinder head receiving the shaft thrust may crack or be damaged, causing the camshaft to seize or break. To avoid this, the following steps should be carried out.

(a) Apply MP grease to the thrust portion of the camshaft.

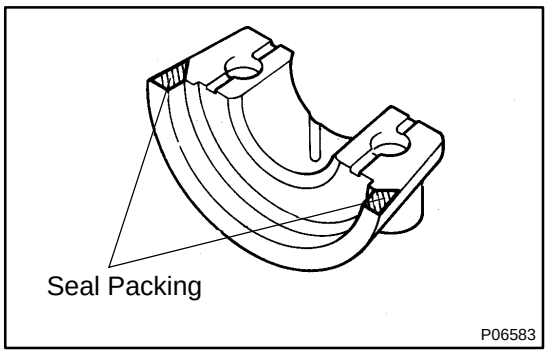

(b) Place the exhaust camshaft so that the knock pin is located slightly counterclockwise from the vertical axis of the camshaft.

HINT:

The above angle allows the No.1 and No.3 cylinder cam lobes of the exhaust camshaft to push their valve lifters evenly.

(c) Remove any old packing (FIPG) material.

(d) Apply seal packing to the cylinder head as shown in the illustration.

Seal packing:
Part No. 08826-00080 or equivalent

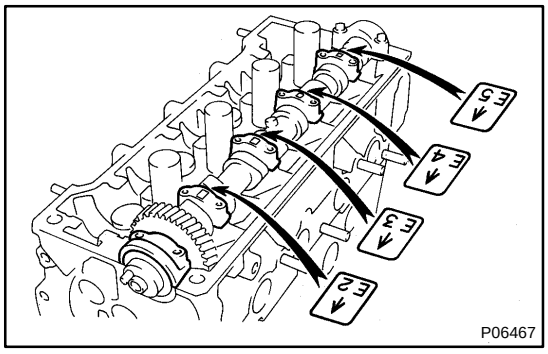

(e) Install the 5 bearing caps in their proper locations.

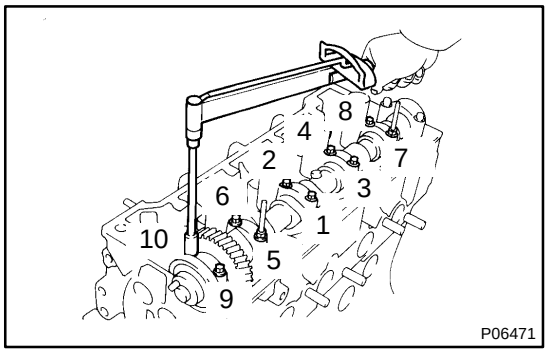

(f) Apply a light coat of engine oil on the threads and under the heads of the bearing cap bolts.

(g) Install and uniformly tighten the 10 bearing cap bolts, in several passes, in the sequence shown.

Torque: 13 N·m (130 kgf·cm, 9 ft·lbf)

(h) Apply MP grease to a new oil seal lip.

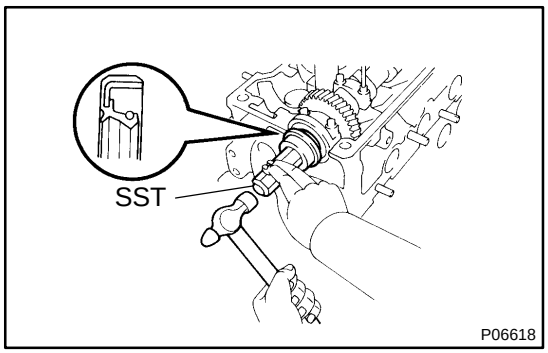

(i) Using SST, tap in the oil seal.
SST 09223-4601 1

HINT:

- Do not install the oil seal with the lip facing the wrong direction.
- Insert the oil seal into the deepest part of the cylinder head.

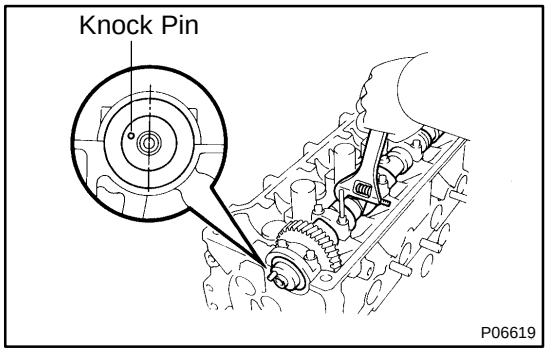

5. INSTALL INTAKE CAMSAHFT

(a) Set the intake camshaft so that the knock pin is slightly above the top of the cylinder head.

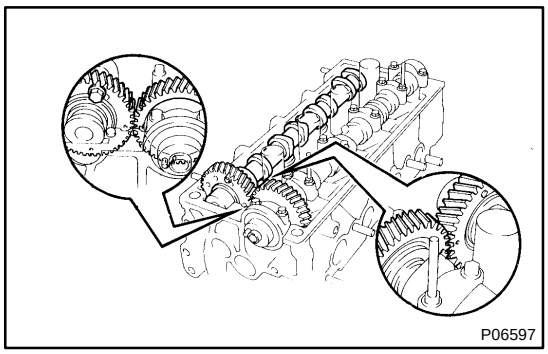

(b) Apply MP grease to the thrust portion of the camshaft.
(c) Engage the intake camshaft gear to the exhaust camshaft gear by matching the assembly installation marks on each gear.

NOTICE:

There are also timing marks (for TDC) on each gear as shown in the illustration. Do not use these marks.

(d) Roll down the intake camshaft onto the bearing journals while engaging gears with each other.

HINT:

The above angle allows the No.1 and No.3 cylinder cam lobes of the intake camshaft to push their valve lifters evenly.

(e) Install the 4 bearing caps in their proper locations.

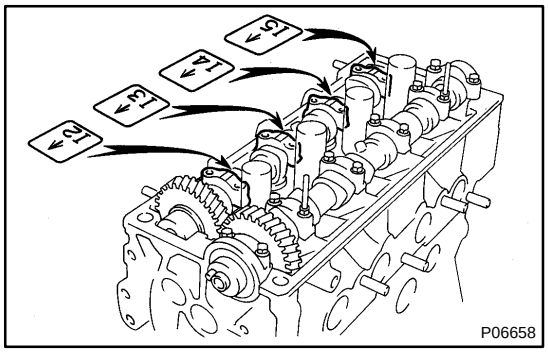

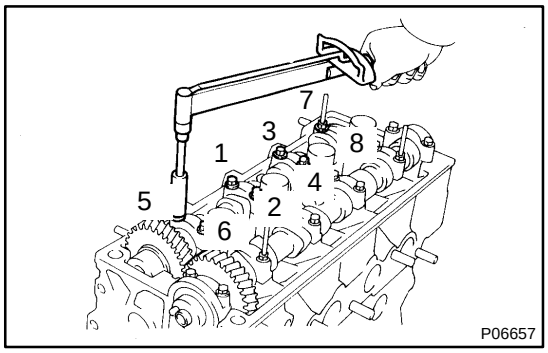

(f) Apply a light coat of engine oil on the threads and under the heads of the bearing cap bolts.
(g) Install and uniformly tighten the 8 bearing cap bolts, in several passes, in the sequence shown.
Torque: 13 N·m (130 kgf·cm, 9 ft·lbf)

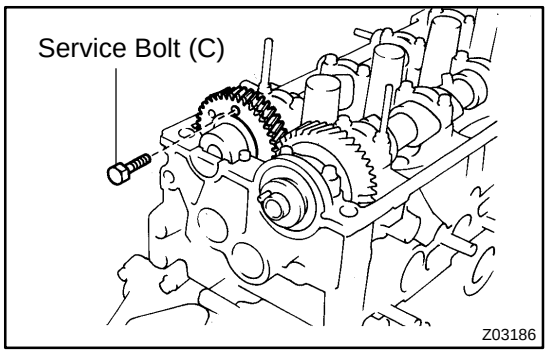

(h) Remove the service bolt (C).

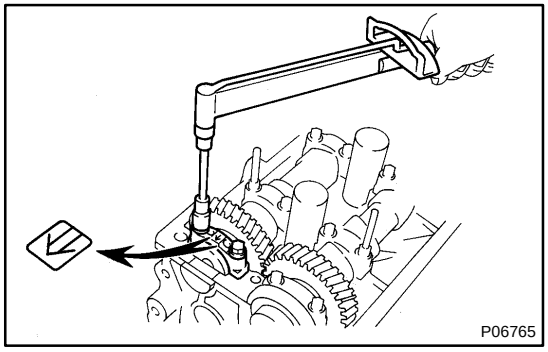

(i) Install the No.1 bearing cap with the arrow mark facing forward.

NOTICE:

If the No.1 bearing cap does not fit properly, push the camshaft gear backwards by prying apart the cylinder head and camshaft gear with a screwdriver.

(j) Apply a light coat of engine oil on the threads and under the heads of the bearing cap bolts.

(k) Install and alternately tighten the 2 bolts in several passes.

Torque: 13 N·m (130 kgf·cm, 9 ft·lbf)

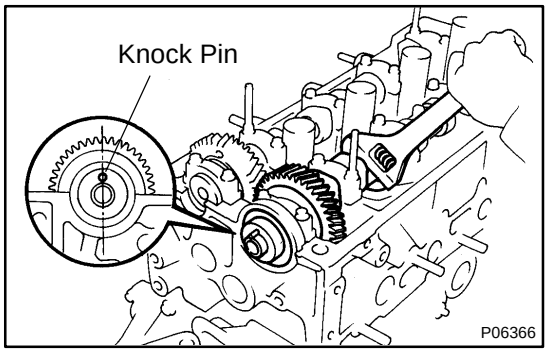

(l) Turn the exhaust camshaft clockwise, and set it with the knock pin facing upward.

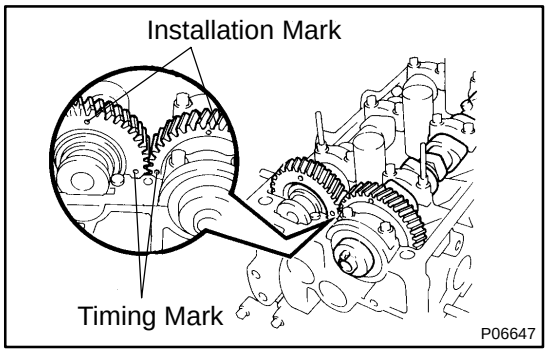

(m) Check that the timing marks of the camshaft gears are aligned.

HINT:

The assembly installation marks are on the upside.

6. CHECK AND ADJUST VALVE CLEARANCE (See step 5 to 7 in valve clearance inspection and adjustment)

7. INSTALL WATER INLET NO.2

(a) Connect the water inlet to the water inlet hose.

(b) Install the water inlet with the 2 nuts.

Torque: 15 N·m (150 kgf·cm, 11 ft·lbf)

8. INSTALL OIL DIPSTICK GUIDE AND DIPSTICK

(a) Install a new O-ring to the dipstick guide.

(b) Apply a small amount of engine oil to the O-ring.

(c) Push in the dipstick guide together with the dipstick.

(d) Install the dipstick guide and bracket with the bolt.

Torque: 9 N·m (95 kgf·cm, 82 in.·lbf)

(e) Connect the crankshaft position sensor connector to the dipstick guide.

9. INSTALL GENERATOR BRACKET

Install the bracket with the 3 bolts.

Torque: 26 N·m (270 kgf·cm, 20 ft·lbf)

10. INSTALL CAMSHAFT TIMING PULLEY (See page EM-17)

11. INSTALL TIMING BELT AND TIMING BELT COVERS (See page EM-17)

12. INSTALL SPARK PLUGS

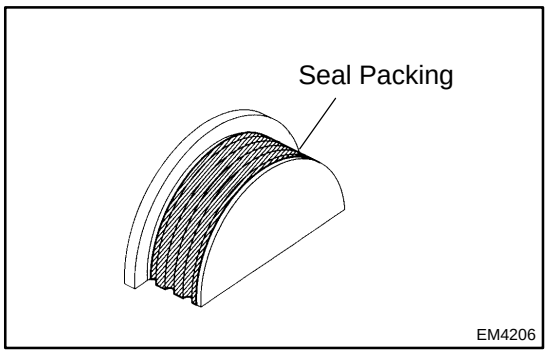

13. INSTALL SEMI-CIRCULAR PLUG

(a) Remove any old packing (FIPG) material.

(b) Apply seal packing to the circular plug.

Seal packing:

Part No. 08826-00080 or equivalent

(c) Install the semi-circular plug to the cylinder head.

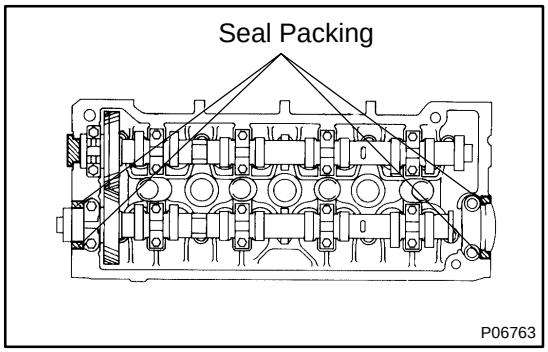

14. INSTALL CYLINDER HEAD COVER

(a) Remove any old packing (FIPG) material.

(b) Apply seal packing to the cylinder head as shown in the illustration.

Seal packing:

Part No. 08826-00080 or equivalent

(c) Install the gasket to the head cover.

(d) Install the head cover with the 4 seal washers, and cap nuts.

Torque: 5.9 N·m (60 kgf·cm, 52 in.·lbf)

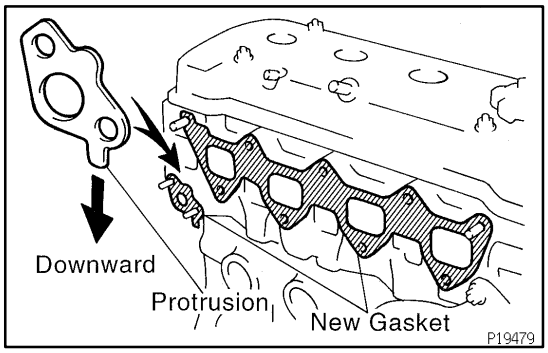

15. INSTALL RH ENGINE MOUNTING INSULATOR (See page EM-17)

16. INSTALL INTAKE MANIFOLD

(a) Place a new intake manifold gasket to the cylinder head.

(b) Place a new EGR inlet gasket to the cylinder head, facing the protrusion downward.

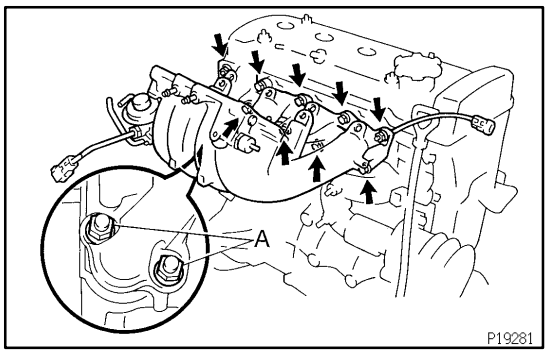

(c) Install the intake manifold with the 7 bolts, ground strap and 4 nuts.

Uniformly tighten the bolts and nuts in several passes.

Torque:

A: 13 N·m (130 kgf·cm, 9 ft·lbf)

Others: 19 N·m (195 kgf·cm, 14 ft·lbf)

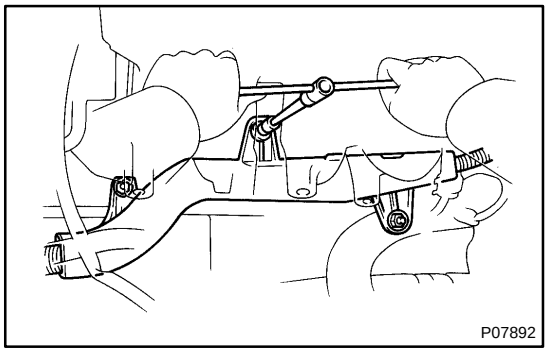

17. CONNECT ENGINE WIRE

(a) Connect the engine wire with the bolt and 2 nuts.

(b) Connect the clamp for the wire harness bracket.

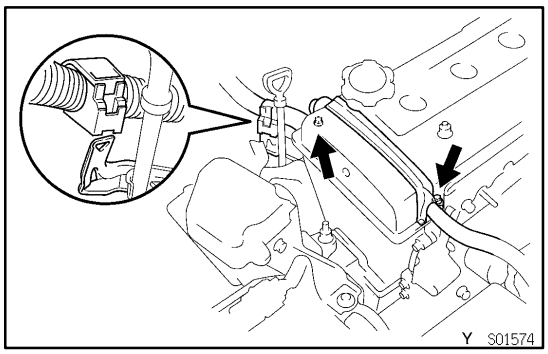

(c) Connect the engine wire to cylinder head cover, and install the engine wire cover with the 2 bolts.

(d) Connect these connectors:
- w/ A/C:
  A/C compressor connector
- Oil pressure switch connector
- Crankshaft position sensor connector
- Injector connector

18. INSTALL INJECTORS AND DELIVERY PIPE (See page SF-24)

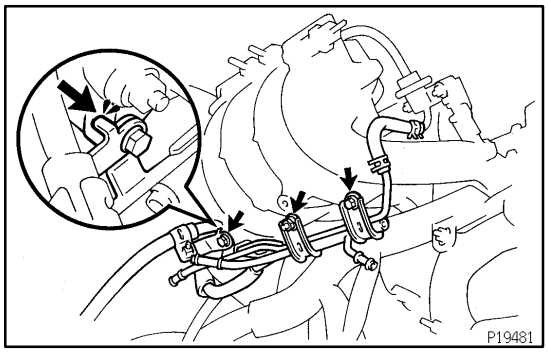

19. INSTALL AIR INTAKE CHAMBER (See page SF-24)

20. INSTALL THROTTLE BODY (See page SF-35)

21. INSTALL AIR PIPE

(a) Install the air pipe and fuel hose clamp with the 2 bolts and nut.

HINT:

Attach the clamp claw of the fuel hose to the intake manifold.

(b) Connect these hoses:
- Fuel return hose to pressure regulator
- Air hose (from IAC valve) to air pipe

22. INSTALL INTAKE MANIFOLD STAY

Torque:
12 mm head bolt: 19 N·m (195 kgf·cm, 14 ft·lbf)
14 mm head bolt: 39 N·m (400 kgf·cm, 29 ft·lbf)

23. INSTALL EGR VACUUM MODULATOR AND VSV

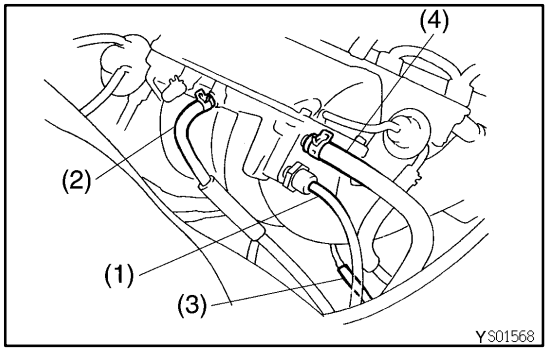

24. CONNECT HOSES

Connect these hose to the intake chamber:
(1) MAP sensor vacuum hose from gas filter on intake manifold
(2) PS air hose from intake manifold
(3) PS air hose from air pipe
(4) Brake booster vacuum hose from intake manifold

25. CONNECT GROUND STRAP CONNECTOR

26. INSTALL WATER INLET AND INLET HOUSING ASSEMBLY

(a) Remove any old packing (FIPG) material and be careful not to drop any oil on the contact surfaces of the inlet housing and cylinder head.
- Using a razor blade and gasket scraper, remove all the old packing (FIPG) material from the gasket surfaces and sealing groove.
- Thoroughly clean all components to remove all the loose material.
- Using a non-residue solvent, clean both sealing surfaces.

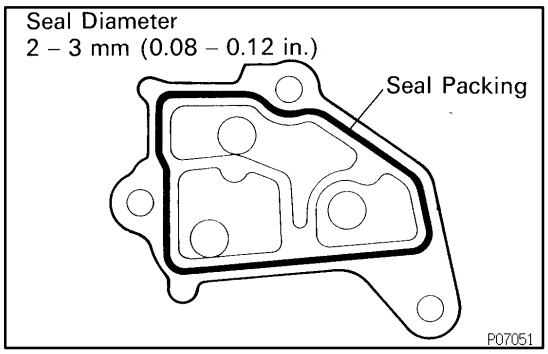

(b) Apply seal packing to the inlet housing groove.
Seal packing:
Part No. 08826-00100 or equivalent
- Install a nozzle that has been cut to a 2 - 3 mm (0.08 - 0.12 in.) opening.

HINT:
Avoid applying an excessive amount to the surface.
- Parts must be assembled within 15 minutes of application. Otherwise the material must be removed and reapplied.
- Immediately remove nozzle from the tube and reinstall cap.

(c) Install the water inlet and inlet housing assembly with the bolt and 2 nuts.
Torque: 20 N·m (200 kgf·cm, 14 ft·lbf)

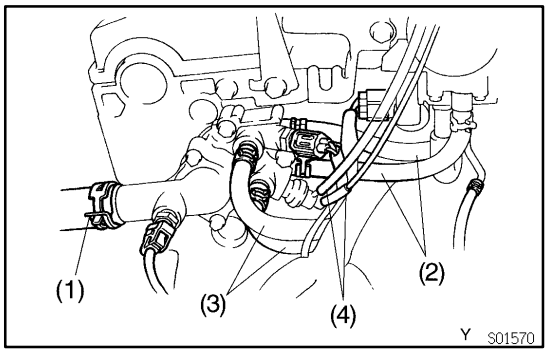

(d) Connect these hoses:
(1) Radiator outlet hose
(2) 2 water bypass hoses
(3) 2 heater water hoses
(4) 2 EVAP TVV vacuum hoses

(e) Connect these connectors:
- ECT sensor connector
- ECT switch connector
- IAC valve connector

27. INSTALL WATER OUTLET

(a) Remove any old packing (FIPG) material and be careful not to drop any oil on the contact surfaces of the water outlet and cylinder head.
- Using a razor blade and gasket scraper, remove all the old packing (FIPG) material from the gasket surfaces and sealing groove.
- Thoroughly clean all components to remove all the loose material.

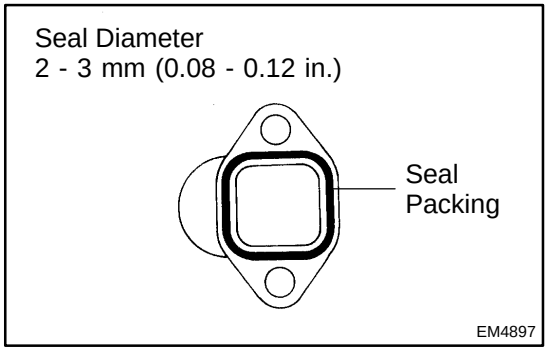

- Using a non-residue solvent, clean both sealing surfaces.

(b) Apply seal packing to the water outlet groove.
Seal packing:
Part No. 08826-00100 or equivalent
- Install a nozzle that has been cut to a 2 - 3 mm (0.08 - 0.12 in.) opening.

HINT:
Avoid applying an excessive amount to the surface.

- Parts must be assembled within 15 minutes of application. Otherwise the material must be removed and reapplied.
- Immediately remove nozzle from the tube and reinstall cap.

(c) Install the water outlet with the 2 bolts.
Torque: 20 N·m (200 kgf·cm, 14 ft·lbf)

(d) Connect the radiator upper hose to the water outlet.

28. INSTALL EXHAUST MANIFOLD

(a) Install the lower heat insulator to the exhaust manifold with the 3 bolts.
Torque: 9.3 N·m (95 kgf·cm, 82 in.·lbf)

(b) Install a new gasket and the exhaust manifold with new 5 nuts. Uniformly tighten the nuts in several passes.
Torque: 34 N·m (350 kgf·cm, 25 ft·lbf)

(c) Install the upper heat insulator with the 3 bolts.
Torque: 9.3 N·m (95 kgf·cm, 82 in.·lbf)

(d) Connect the main oxygen sensor connector.

29. INSTALL FRONT EXHAUST PIPE (See page EM-65)

30. INSTALL WATER PUMP PULLEY

Temporarily install the water pump pulley with the 4 bolts.

31. INSTALL PS PUMP ADJUSTING BRACKET AND DRIVE BELT (See page EM-65)

32. w/ A/C:
INSTALL A/C IDLER PULLEY AND DRIVE BELT (See page CH-21)

33. INSTALL GENERATOR AND DRIVE BELT (See page EM-65)

34. TIGHTEN WATER PUMP PULLEY BOLTS
Torque: 9.3 N·m (95 kgf·cm, 82 in.·lbf)

35. INSTALL DISTRIBUTOR (See page IG-12)

36. INSTALL AIR CLEANER CAP

37. CONNECT THESE CABLES:

(a) Accelerator cable

(b) A/T:
Throttle cable

(c) W/ Cruise control system:
Cruise control actuatorcable

38. REFILL ENGINE COOLANT

39. START ENGINE AND CHECK FOR LEAKS

40. PERFORM ENGINE ADJUSTMENT

41. INSTALL RH ENGINE UNDER COVER

42. ROAD TEST VEHICLE

Check for abnormal noise, shock, slippage, correct shift points and smooth operation.

43. RECHECK ENGINE COOLANT LEVEL

IG0LJ-01

INSTALLATION

1. SET NO.1 CYLINDER TO TDC/COMPRESSION

Turn the crankshaft clockwise, and position the slit of the intake camshaft as shown in the illustration.

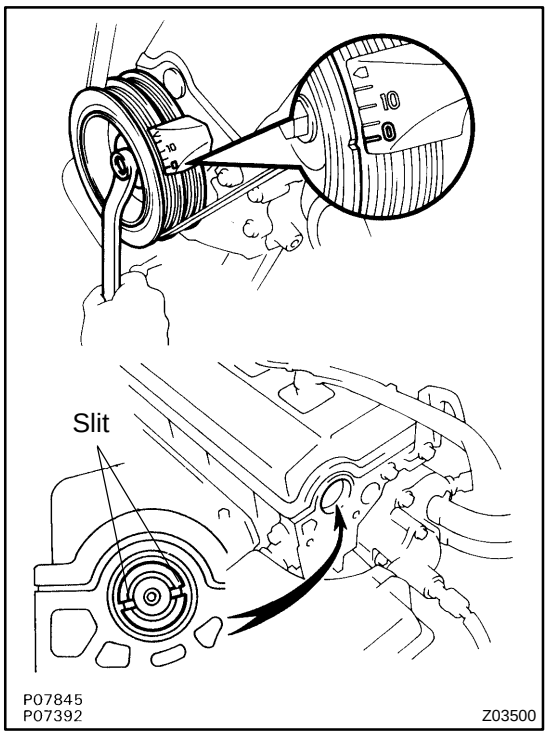

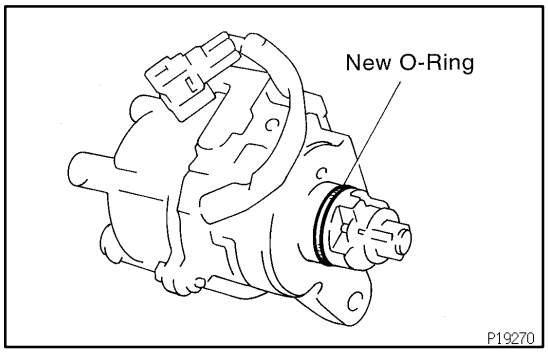

2. INSTALL DISTRIBUTOR

(a) Install a new O-ring to the distributor housing.

(b) Apply a light coat of engine oil on the O-ring.

(c) Align the cutout portion of the coupling with the groove of the housing.

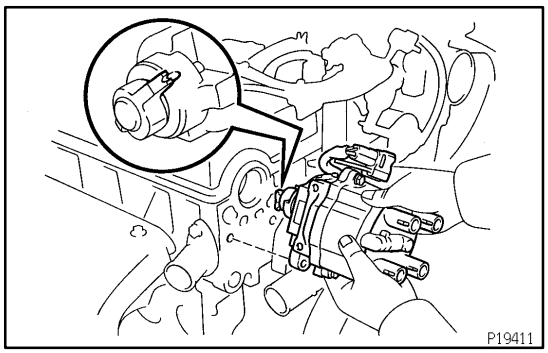

(d) Insert the distributor, aligning the bolt holes of the distibutor flange and cylinder head.

(e) Tighten the bolt.

Torque: 20 N·m (200 kgf·cm, 14 ft·lbf)

3. CONNECT HIGH-TENSION CORDS TO DISTRIBUTOR CAP

4. CONNECT DISTRIBUTOR CONNECTOR

5. CHECK IGNITION TIMING

(See page EM-9)

CO0ZT-01

INSTALLATION

Installation is in the reverse order of removal (See page CO-32).

EM1CA-02

INSTALLATION

1. INSTALL ENGINE AND TRANSAXLE
(C52: See page MX-8)
(A246E: See page AX-20)

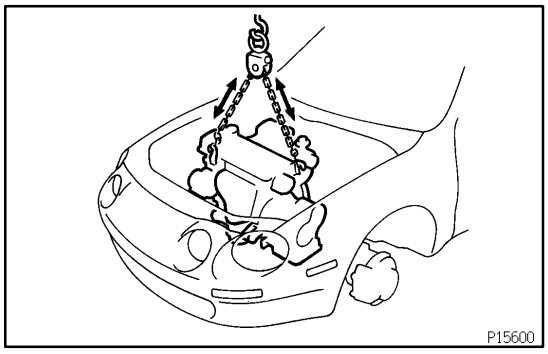

2. INSTALL ENGINE AND TRANSAXLE ASSEMBLY IN VEHICLE

(a) Attach the engine chain hoist to the engine hangers.
(b) Slowly lower the engine into the engine compartment.
(c) Tilt the transaxle downward, lower the engine and clear the LH body mounting.
(d) Keep the engine level, and align RH and LH mountings with the body mountings.
(e) Attach the RH engine mounting bracket to the mounting insulator, and temporarily install the 3 nuts.
(f) Temporarily install the LH engine mounting insulator to the body with the through bolt.
(g) Attach the LH engine mounting bracket to the mounting insulator, and install the 2 bolts and nut.
Torque: 64 N·m (650 kgf·cm, 47 ft·lbf)

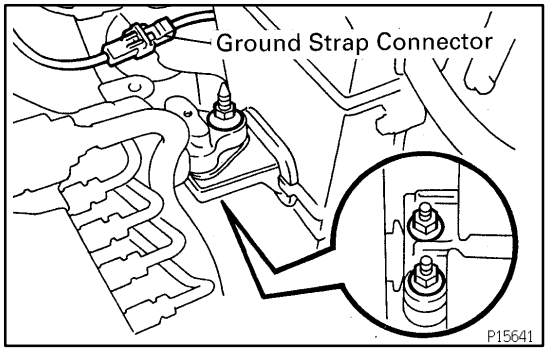

(h) Tighten the through bolt holding the LH engine mounting insulator to the body.
Torque: 73 N·m (740 kgf·cm, 54 ft·lbf)
(i) Tighten the 3 nuts holding the RH engine mounting bracket to the mounting insulator.
Torque:
12 mm head: 28 N·m (290 kgf·cm, 21 ft·lbf)
14 mm head: 52 N·m (530 kgf·cm, 38 ft·lbf)
(j) Connect the ground strap connector.
(k) Remove the engine chain hoist from the engine.
(l) Remove the bolt and engine hanger No.1.

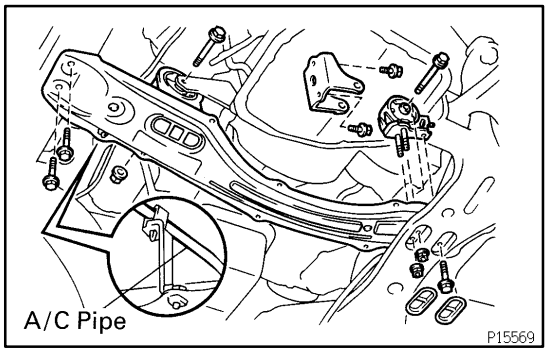

3. INSTALL ENGINE MOUNTING CENTER MEMBER

(a) Attach the center member together with the rear engine mounting insulator to the front suspension member.
(b) Temporarily install the 2 bolts holding the center member to the body.
(c) Install the rear engine mounting bracket with the 2 bolts.
Torque: 78 N·m (800 kgf·cm, 58 ft·lbf)
(d) Temporarily install the bolt and 2 nuts holding the rear engine mounting insulator to the front suspension member.

(e) Temporarily install the bolt holding the rear engine mounting bracket to the mounting insulator.
(f) Temporarily install the bolt and nut holding the front engine mounting bracket to the mounting insulator.
(g) Tighten the 2 bolts holding the center member to the body.
Torque: 35 N·m (360 kgf·cm, 26 ft·lbf)
(h) Tighten the bolt and 2 nuts holding the rear engine mounting insulator to the front suspension member.
Torque: 80 N·m (820 kgf·cm, 59 ft·lbf)
(i) Tighten the bolt holding the rear engine mounting bracket to the mounting insulator.
Torque: 88 N·m (900 kgf·cm, 65 ft·lbf)
(j) Tighten the bolt and nut holding the front engine mounting bracket to the mounting insulator.
Torque: 88 N·m (900 kgf·cm, 65 ft·lbf)
(k) Install the A/C pipe to the bracket.
(l) Install the 2 dust covers to the center member.

4. INSTALL EXHAUST PIPE SUPPORT BRACKET
Torque: 19 N·m (195 kgf·cm, 14 ft·lbf)

5. CONNECT TRANSAXLE CONTROL CABLE(S) TO TRANSAXLE

6. A/T only:
INSTALL TRANSAXLE CONTROL CABLE TO ENGINE MOUNTING CENTER MEMBER

7. INSTALL TRANSAXLE CONTROL CABLE(S) TO TRANSAXLE

8. M/T only:
INSTALL CLUTCH RELEASE CYLINDER
Torque: 12 N·m (120 kgf·cm, 9 ft·lbf)

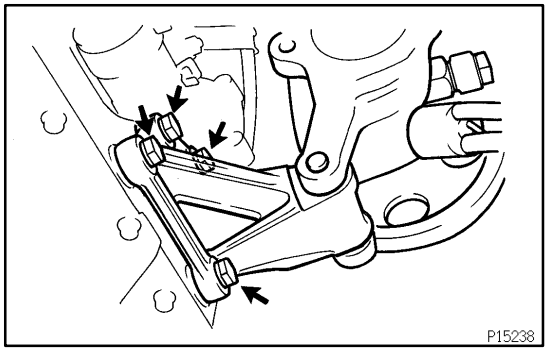

9. INSTALL RELAY BOX FOR A/C

10. INSTALL PS PUMP
(a) Install the PS pump with the 4 bolts.
Torque:
12 mm head: 19 N·m (195 kgf·cm, 14 ft·lbf)
14 mm head: 39 N·m (400 kgf·cm, 29 ft·lbf)
(b) Install the adjusting bracket with the 2 bolts.
Torque: 39 N·m (400 kgf·cm, 29 ft·lbf)
(c) Temporarily install the lock bolt and drive belt.
(d) Adjust the drive belt.

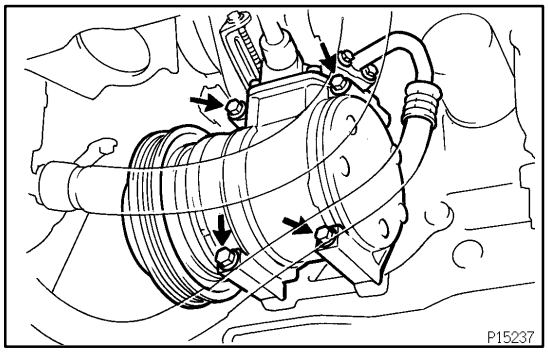

11. INSTALL A/C COMPRESSOR
(a) Install the A/C compressor with the 4 bolts.
Torque: 25 N·m (250 kgf·cm, 18 ft·lbf)
(b) Connect the A/C compressor connector.
(c) Install the drive belt with the adjusting bolt.
(d) Tighten the idler pulley lock nut.
Torque: 39 N·m (400 kgf·cm, 29 ft·lbf)

12. INSTALL GENERATOR DRIVE BELT
(See page CH-21)

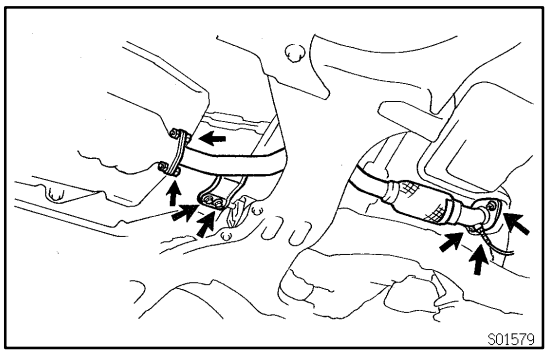

13. INSTALL DRIVE SHAFTS (See page SA-24)

14. INSTALL FRONT EXHAUST PIPE

(a) Place 2 new gaskets to the front and rear of the front exhaust pipe.

(b) Temporarily install the 2 bolts and 2 new nuts holding the front exhaust pipe to the TWC.

(c) Temporarily install 3 new nuts holding the front exhaust pipe to the exhaust manifold.

(d) Temporarily install the 2 bolts holding the front exhaust pipe to the exhaust pipe support bracket.

(e) Tighten the 3 nuts holding the front exhaust pipe to the exhaust manifold.

Torque: 62 N·m (630 kgf·cm, 46 ft·lbf)

(f) Tighten the 2 bolts and 2 nuts holding the front exhaust pipe to the TWC.

Torque: 43 N·m (440 kgf·cm, 32 ft·lbf)

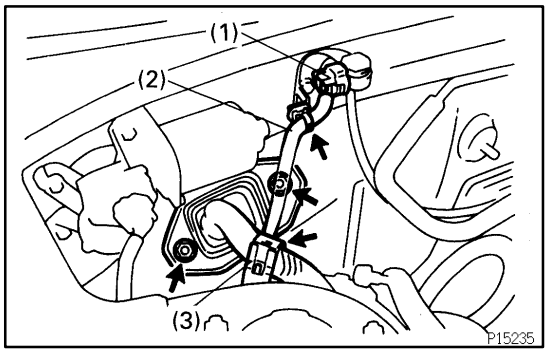

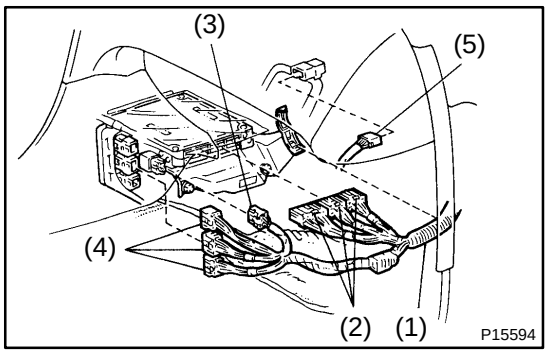

(g) Tighten install the 2 bolts holding the front exhaust pipe to the exhaust pipe support bracket.

Torque: 19 N·m (195 kgf·cm, 14 ft·lbf)

(h) Connect the oxygen sensor connector (bank 1 sensor 1).

15. CONNECT ENGINE WIRE TO CABIN

(a) Push in the engine wire through the cowl panel.

(b) Install the engine wire retainer with the 2 nuts.

(c) Connect the connector, wire and clamp:
- (1) MAP sensor connector
- (2) MAP sensor wire from clamp on bracket
- (3) Engine wire clamp from the bracket.

(d) Connect the wire and connectors:
- (1) Engine wire from clamp on ECM bracket
- (2) 3 ECM connectors
- (3) Circuit opening relay connector
- (4) 3 connectors to connectors on bracket
- (5) A/C amplifier connector

(e) Install the floor carpet.

(f) Install these parts:
- Lower instrument panel finish panel
- Cowl side trim
- Scuff plate

16. CONNECT ENGINE WIRE TO ENGINE COMPARTMENT RELAY BOX

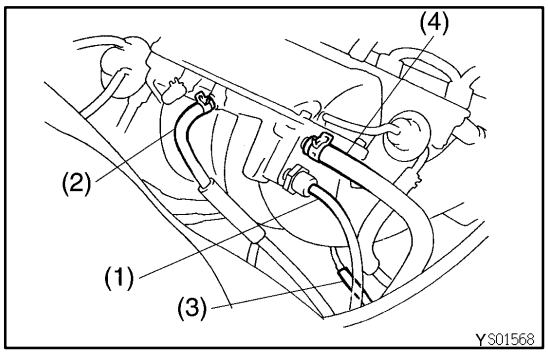

17. CONNECT CONNECTOR, WIRE, CABLE, STRAP AND HOSES

Connect the connector, wire, cable, strap and hoses:

(1) MAP sensor vacuum hose to gas filter on intake manifold
(2) PS air hose to intake manifold
(3) PS air hose to air pipe
(4) Brake booster vacuum hose to intake manifold

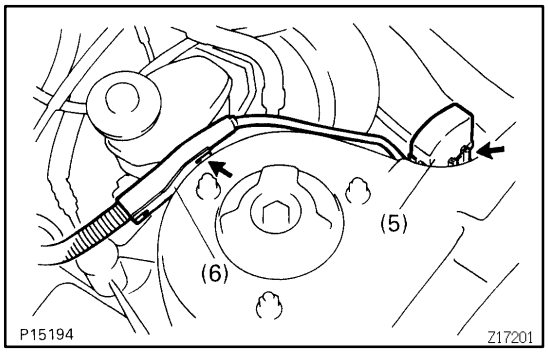

(5) DLC1 to bracket
(6) Engine wire protector to bracket

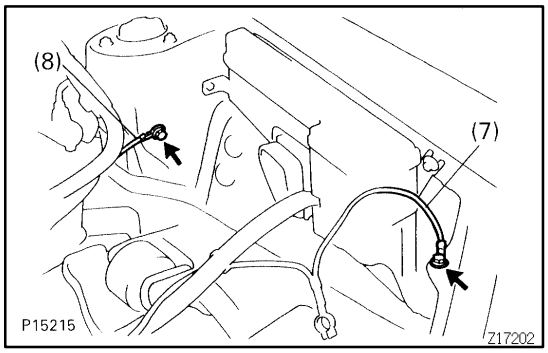

(7) Ground cable to body
(8) Ground strap to body

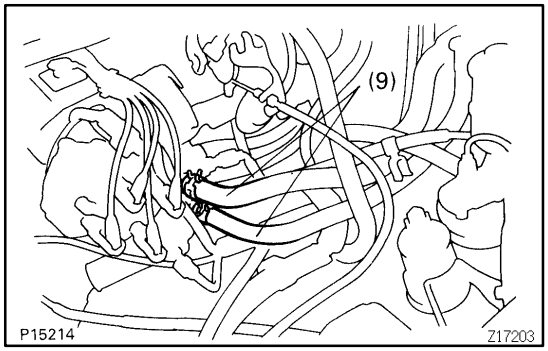

(9) 2 heater hoses to water inlet housing

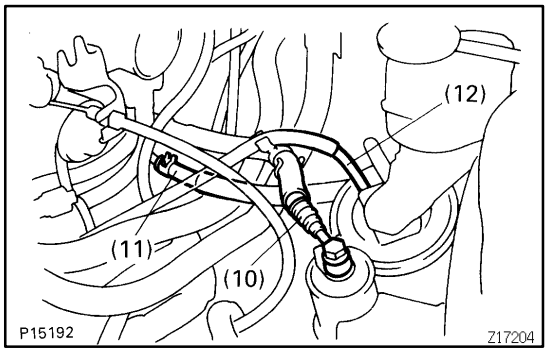

(10) Fuel inlet hose to fuel filter
Connect the inlet hose with 2 new gaskets and the union bolt.

Torque: 30 N·m (300 kgf·cm, 22 ft·lbf)

(11) Fuel return hose to return pipe
(12) EVAP hose to charcoal canister

18. **INSTALL RADIATOR**
    (See page CO-23)
19. **INSTALL ACCELERATOR CABLE TO THROTTLE BODY, CABLE BRACKET AND CLAMPS**
20. **INSTALL CRUISE CONTROL ACTUATOR CABLE TO CLAMPS**
21. **INSTALL AIR CLEANER**
22. **FILL WITH ENGINE COOLANT AND ENGINE OIL**
23. **INSTALL BATTERY AND TRAY**
24. **START ENGINE AND CHECK FOR LEAKS**
25. **PERFORM ENGINE ADJUSTMENT**
26. **INSTALL ENGINE UNDER COVERS AND HOOD**
27. **ROAD TEST VEHICLE**

    Check for abnormal noises, shock slippage, correct shift points and smooth operation.
28. **RECHECK ENGINE COOLANT AND OIL LEVELS**

SF1BW-01

INSTALLATION

Installation is in the reverse order of removal. (See page SF-16)

SF0WB-03

INSTALLATION

Installation is in the reverse order of removal. (See page SF-10)

CH0E9-02

INSTALLATION

Installation is in the reverse order of removal (See page CH-8).

SF1C0-01

INSTALLATION

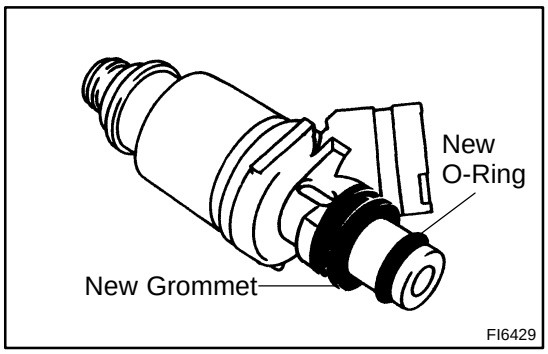

1. INSTALL INJECTORS AND DELIVERY PIPE

(a) Install a new grommet to the injector.

(b) Apply a light coat of gasoline to a new O-ring and install it to the injector.

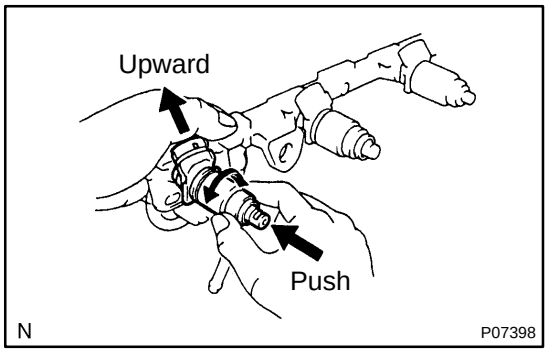

(c) While turning the injector left and right, install it to the delivery pipe. Install the 4 injectors.

(d) Piston the injector connector upward.

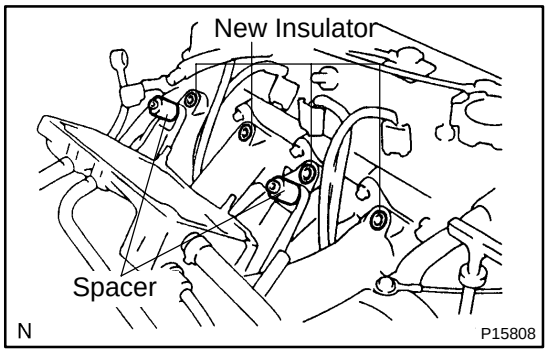

(e) Place 4 new insulators and the 2 spacers in position on the intake manifold.

(f) Place the 4 injectors and delivery pipe assembly in position on the intake manifold.

(g) Temporarily install the 2 bolts holding the delivery pipe to the intake manifold.

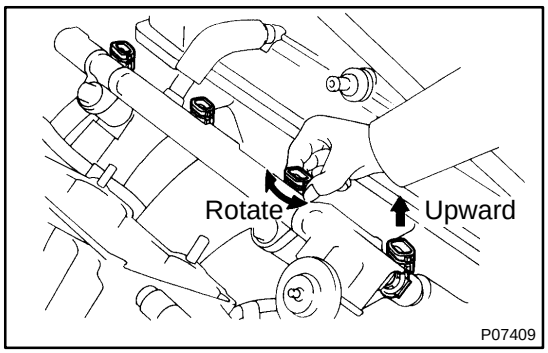

(h) Check that the injectors rotate smoothly.

HINT:

If the injectors do not rotate smoothly, the probable cause is incorrect installation of the O-rings. Replace the O-rings.

(i) Position the injector connector upward.

(j) Tighten the 2 bolts holding the delivery pipe to the intake manifold.

Torque: 15 N·m (150 kgf·cm, 11 ft·lbf)

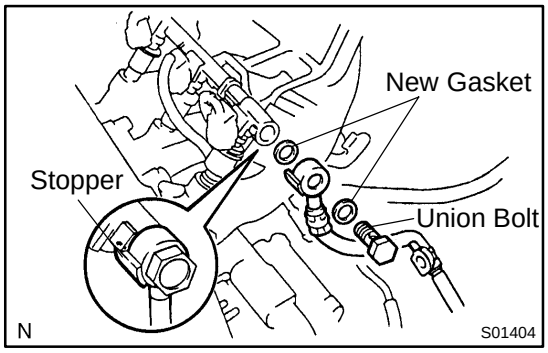

2. CONNECT FUEL RETURN HOSE TO FUEL PRESSURE REGULATOR

3. CONNECT FUEL INLET HOSE TO DELIVERY PIPE

Connect the inlet hose with 2 new gaskets and the union bolt.

Torque: 29 N·m (300 kgf·cm, 22 ft·lbf)

4. CONNECT INJECTOR CONNECTORS

HINT:

The No.1 and No.3 injector connectors are gray, and the No.2 and No.4 injector connectors are dark gray.

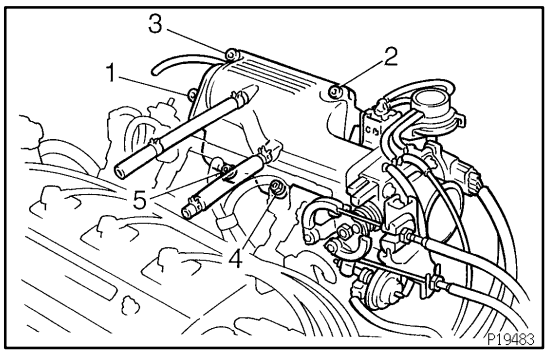

5. CONNECT THROTTLE BODY AND AIR INTAKE CHAMBER COVER ASSEMBLY

(a) Place a new gasket on the intake manifold.

(b) Using a 6 mm hexagon wrench, connect the throttle body and chamber cover assembly with the 3 bolts and 2 nuts in the sequence shown.

Torque: 19 N·m (195 kgf·cm, 14 ft·lbf)

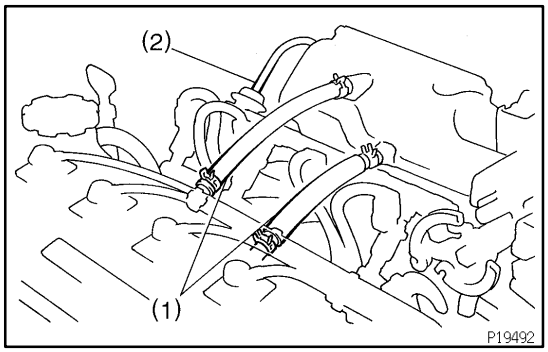

(c) Connect these hoses and connectors:
- (1) 2 PCV hoses to cylinder head cover
- (2) Vacuum sensing hose to fuel pressure regulator

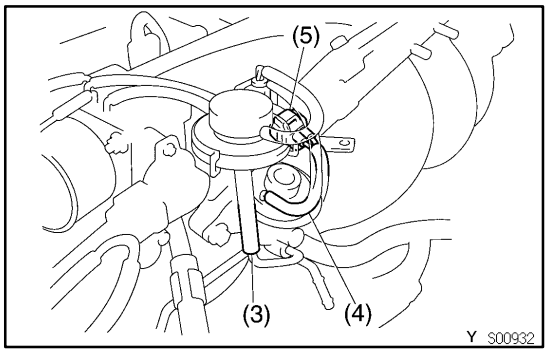

- (3) EGR hose to EGR valve
- (4) Vacuum hose to EGR valve
- (5) VSV (for EGR) connector

6. INSTALL AIR CLEANER HOSE AND CAP

LU0JS-01

INSTALLATION

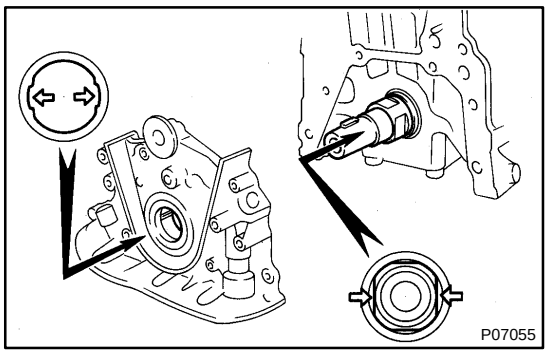

1. INSTALL OIL PUMP

(a) Place a new gasket on the cylinder block.

(b) Engage the spline teeth of the oil pump drive rotor with the large teeth of the crankshaft, and slide the oil pump.

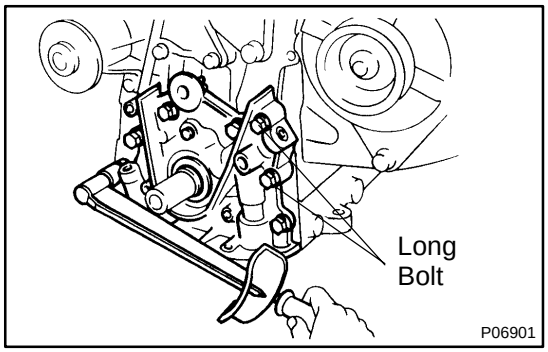

(c) Install the oil pump with the 7 bolts.
Torque: 21 N·m (218 kgf·cm, 16 ft·lbf)
Bolt length:
Long bolt: 35 mm (1.38 in.)
Other bolt: 25 mm (0.98 in.)

2. INSTALL NO.1 OIL PAN

(a) Remove any old packing (FIPG) material and be careful not to drop any oil on the contact surfaces of the No.1 oil pan and cylinder block.

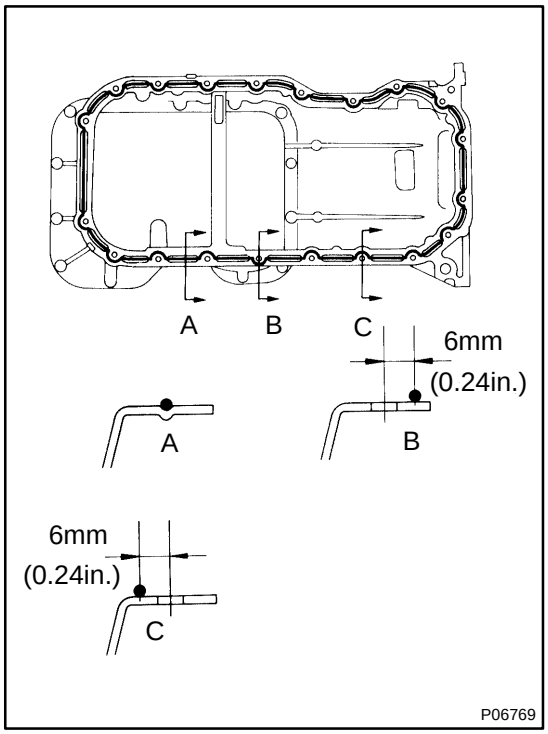

- Using a razor blade and gasket scraper, remove all the old packing (FIPG) material from the gasket surfaces and sealing groove.
- Thoroughly clean all components to remove all the loose material.
- Using a non-residue solvent, clean both sealing surfaces.

NOTICE:
Do not use a solvent which will affect the painted surfaces.

(b) Apply seal packing to the oil pan as shown in the illustration.
Seal packing:
Part No. 08826-00080 or equivalent

- Install a nozzle that has been cut to a 3 - 5 mm (0.12 - 0.20 in.) opening.
- Parts must be assembled within 5 minutes of application. Otherwise the material must be removed and reapplied.
- Immediately remove nozzle from the tube and reinstall cap.

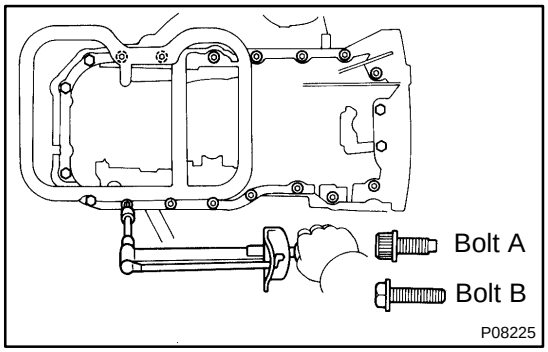

(c) Using a 5 mm hexagon wrench, install the No.1 oil pan with new 14 bolts. Torque the bolts.
Torque:
Bolt A: 16 N·m (165 kgf·cm, 12 ft·lbf)

(d) Install the 6 bolts. Torque the bolts.
Torque:
Bolt B: 7.8 N·m (80 kgf·cm, 69 in.·lbf)

(e) Install and torque the 3 bolts holding the No.1 oil pan to the transaxle.
Torque: 22.5 N·m (230 kgf·cm, 17 ft·lbf)

3. INSTALL OIL STRAINER

Install a new gasket and the oil strainer with the 3 nuts.

Torque: 9.3 N·m (95 kgf·cm, 82 in.·lbf)

4. INSTALL OIL PAN BAFFLE PLATE

Install the baffle plate with the 2 bolts and 2 nuts.

Torque: 7.8 N·m (80 kgf·cm, 69 in.·lbf)

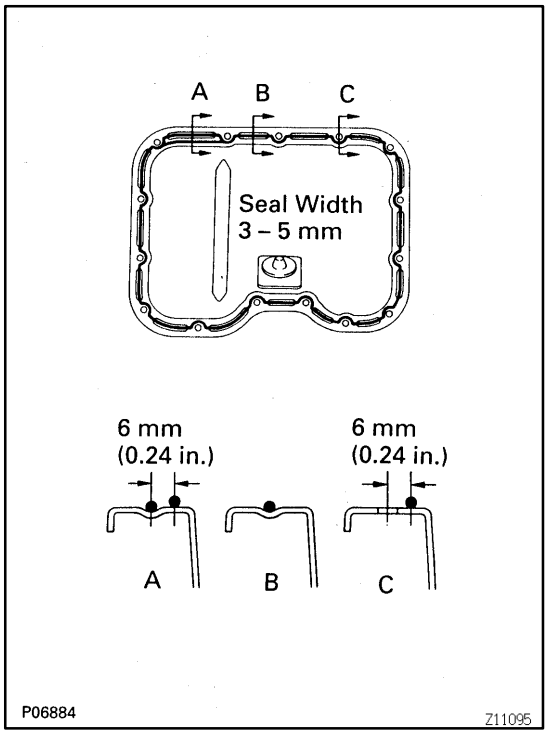

5. INSTALL NO.2 OIL PAN

(a) Remove any old packing (FIPG) material and be careful not to drop any oil on the contact surfaces of the No.2 oil pan and cylinder block.

- Using a razor blade and gasket scraper, remove all the old packing (FIPG) material from the gasket surfaces and sealing groove.
- Thoroughly clean all components to remove all the loose material.
- Using a non-residue solvent, clean both sealing surfaces.

NOTICE:

Do not use a solvent which will affect the painted surfaces.

(b) Apply seal packing to the oil pan as shown in the illustration.

Seal packing:

Part No. 08826-00080 or equivalent

- Install a nozzle that has been cut to a 3 - 5 mm (0.12 - 0.20 in.) opening.
- Parts must be assembled within 5 minutes of application. Otherwise the material must be removed and reapplied.
- Immediately remove nozzle from the tube and reinstall cap.

(c) Install the No.2 oil pan with the 13 bolts and 2 nuts.

Torque:4.9 N·m (50 kgf·cm, 43 in.·lbf)

6. INSTALL TIMING BELT

(See page EM-17)

7. REMOVE ENGINE SLING DEVICE

8. REMOVE ENGINE HANGER

9. INSTALL REAR ENGINE MOUNTING INSULATOR AND ENGINE MOUNTING CENTER MEMBER

(See page EM-65)

10. INSTALL FRONT EXHAUST PIPE SUPPORT BRACKET

11. w/ A/C:

CONNECT A/C PRESSURE PIPE TO ENGINE MOUNTING CENTER MEMBER CLAMP

12. A/T:
CONNECT TRANSAXLE CONTROL CABLE TO ENGINE MOUNTING CENTER MEMBER
13. INSTALL FRONT EXHAUST PIPE (See page EM-65)
14. FILL WITH ENGINE OIL
15. START ENGINE AND CHECK FOR OIL LEAKS
16. RECHECK ENGINE OIL LEVEL
17. INSTALL ENGINE UNDER COVERS
18. INSTALL RH FRONT WHEEL
19. INSTALL HOOD

SR170-02

INSTALLATION

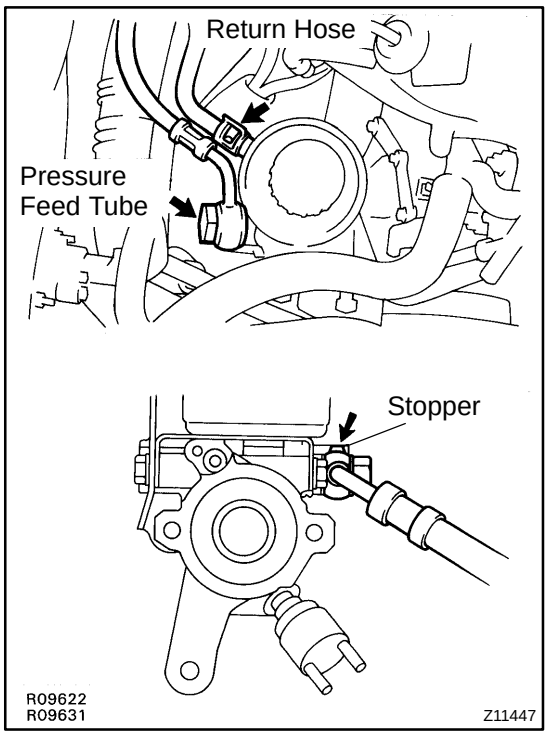

1. INSTALL PS VANE PUMP ASSEMBLY WITH PUMP BRACKET

(a) Temporarily install the pump bracket and bolt to the pump assembly.

(b) Torque the 4 pump bracket set bolts.

Torque:
12 mm head bolt
19 N·m (195 kgf·cm, 14 ft·lbf)
14 mm head bolt
39 N·m (400 kgf·cm, 29 ft·lbf)

2. CONNECT PRESSURE FEED TUBE

Torque the union bolt with a new gasket.

HINT:

Make sure the stopper of the tube is touching the PS vane pump body, as shown, then torque the bolt.

Torque: 52 N·m (525 kgf·cm, 38 ft·lbf)

3. CONNECT RETURN HOSE

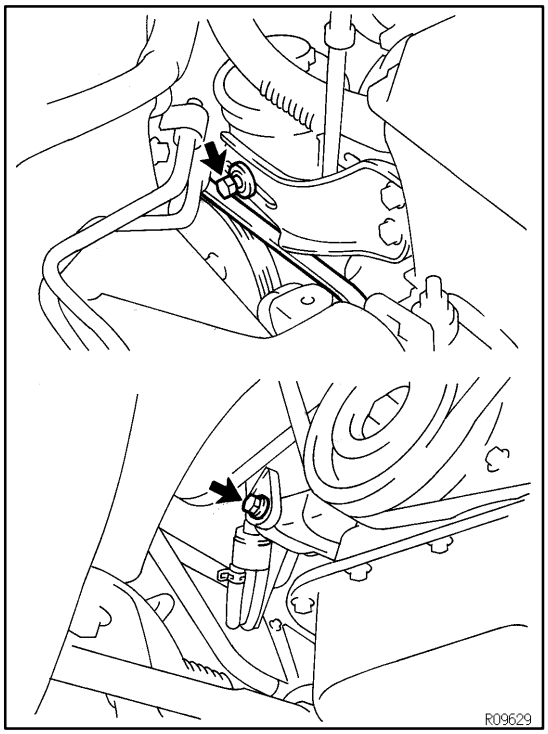

4. INSTALL DRIVE BELT

(a) Adjust drive belt tension.
(See page SR-3)

(b) Torque the 2 bolts.

Torque:3 9 N·m (400 kgf·cm, 29 ft·lbf)

5. INSTALL ENGINE UNDER COVER RH

Tighten the 9 bolts.

6. BLEED POWER STEERING SYSTEM
(See page SR-4)

CO0ZJ-01

INSTALLATION

Installation is in the reverse order of removal (See page CO-23).

THERMOSTAT

COMPONENTS

CO0Z9-01

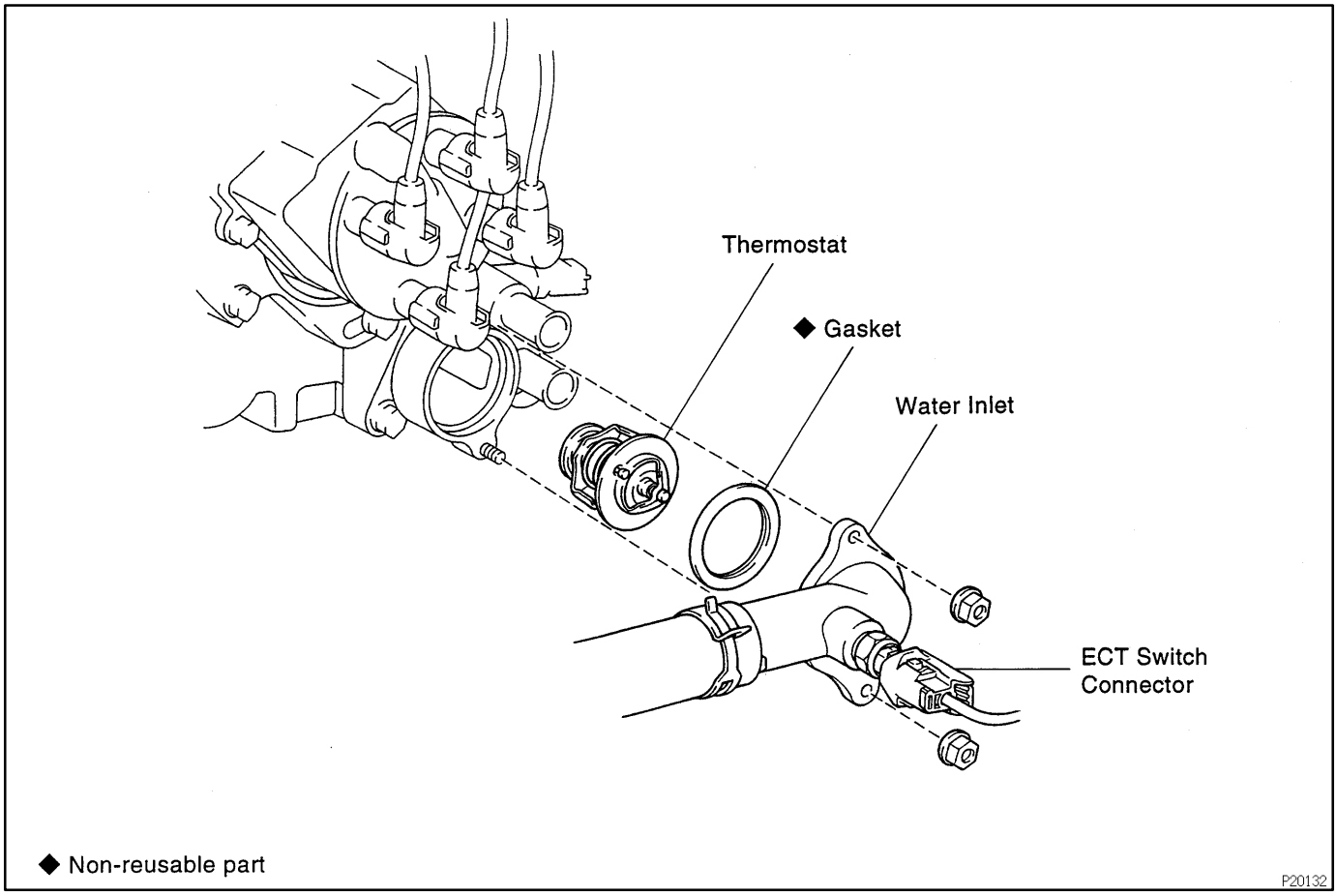

ST0K2-01

INSTALLATION

Installation is in the reverse order of removal (See page ST-4).

SF1C3-01

INSTALLATION

Install ation is in the reverse order of removal (See page SF-31).

EM1PB-01

INSTALLATION

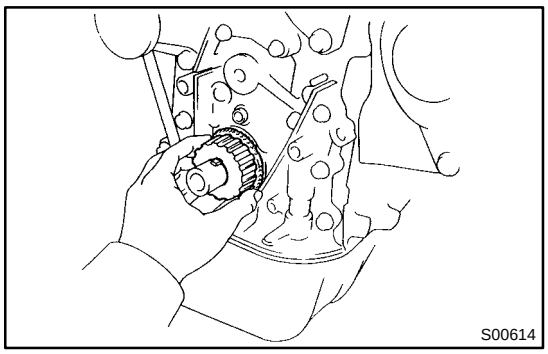

1. INSTALL CAMSHAFT TIMING PULLEY

HINT:

Align the camshaft knock pin with the knock pin groove of the pulley, and slide the timing pulley on the camshaft.

Torque: 59 N·m (600 kgf·cm, 43 ft·lbf)

2. INSTALL CRANKSHAFT TIMING PULLEY

(a) Align the pulley set key with the key groove of the pulley.

(b) Slide the timing pulley on the crankshaft, facing the flange side inward.

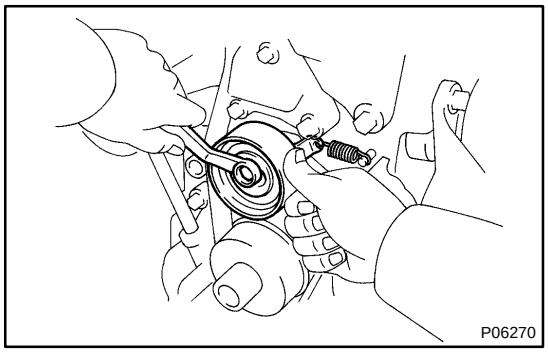

3. TEMPORARILY INSTALL IDLER PULLEY AND TENSION SPRING

(a) Install the idler pulley with the bolt. Do not tighten the bolt yet.

(b) Install the tension spring.

(c) Push the pulley toward the left as far as it will go and tighten the bolt.

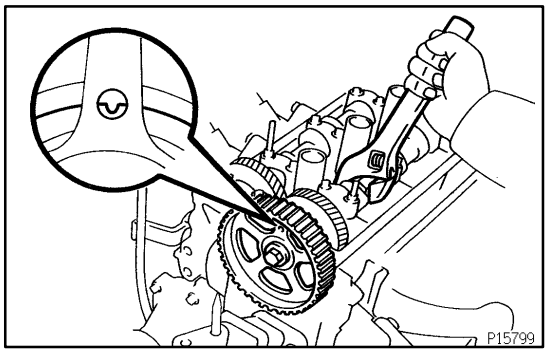

4. SET NO.1 CYLINDER TO TDC/COMPRESSION

(a) Turn the hexagonal wrench head portion of the camshaft, and align the hole of the camshaft timing pulley with the timing mark of the bearing cap.

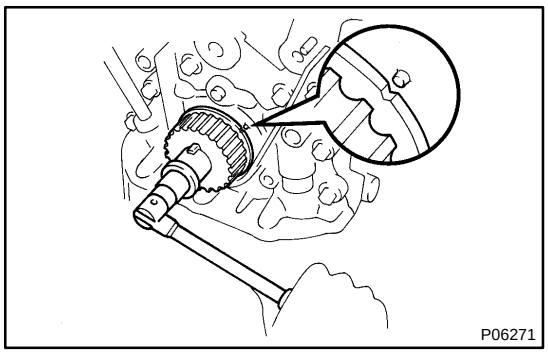

(b) Using the crankshaft pulley bolt, turn the crankshaft and align the timing marks of the crankshaft timing pulley and oil pump body.

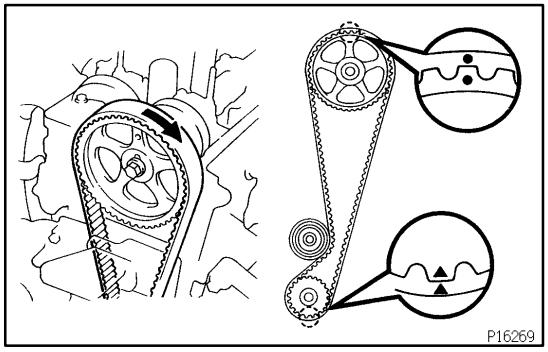

5. INSTALL TIMING BELT

NOTICE:

The engine should be cold.

HINT:

If reusing the timing belt, align the points marked during removal, and install the belt with the arrow pointing in the direction of engine revolution.

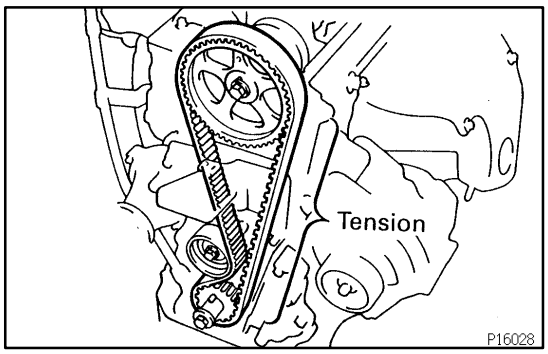

Install the timing belt, and check the tension between the crankshaft timing pulley and camshaft timing pulley.

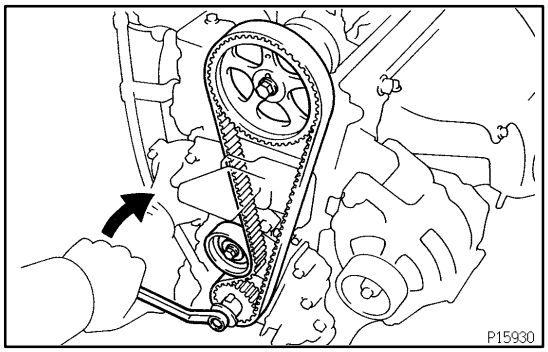

6. CHECK VALVE TIMING AND TIMING BELT TENSION

(a) Loosen the idler pulley bolt.

(b) Slowly turn the crankshaft 2 revolutions from TDC to TDC.

NOTICE:

Always turn the crankshaft clockwise.

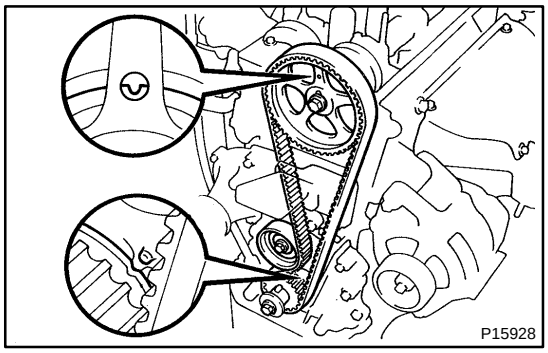

(c) Check that each pulley aligns with the timing marks as shown in the illustration.

If the timing marks do not align, remove the timing belt and reinstall it.

(d) Tighten the idler pulley bolt.

Torque: 37 N·m (375 kgf·cm, 27 ft·lbf)

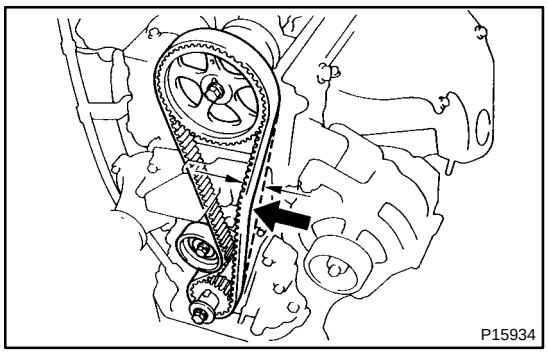

7. Reference:
CHECK TIMING BELT DEFLECTION

Check that there is belt deflection at the position indicated in the illustration.

Belt deflection:
At 20 N (2 kgf, 4.4 lbf):
5 - 6 mm (0.20 - 0.24 in.)

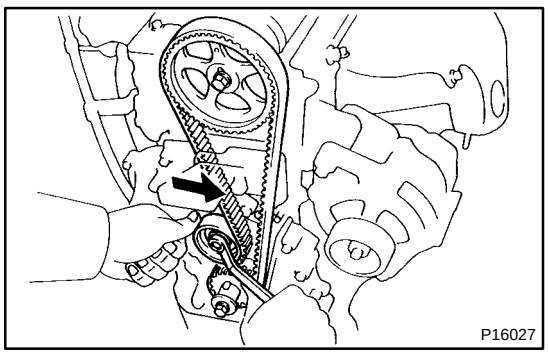

If the deflection is not as specified, readjust with the idler pulley.

8. INSTALL TIMING BELT GUIDE

(a) Remove the temporarily installed crankshaft pulley bolt.

(b) Install the guide, facing the cup side outward.

9. INSTALL TIMING BELT COVERS

Torque: 7.4N·m (75kgf·cm, 65 in.·lbf)

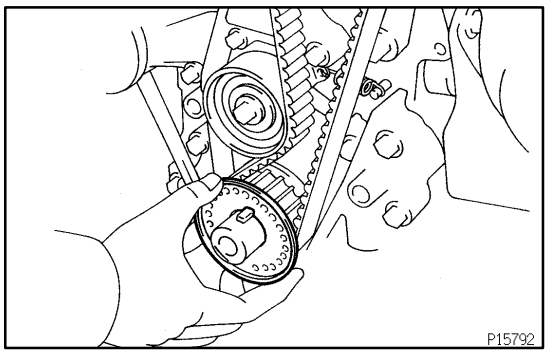

10. INSTALL CRANKSHAFT PULLEY
Torque: 118 N·m (1,200 kgf·cm, 87 ft·lbf)
11. INSTALL CYLINDER HEAD COVER
(See page EM-44)
12. INSTALL WATER PUMP PULLEY AND PS PUMP
13. PS PUMP DRIVE BELT
14. w/ A/C:
INSTALL A/C COMPRESSOR MOUNTING BRACKET
Torque: 47 N·m (480 kgf·cm, 35 ft·lbf)
15. w/ A/C:
INSTALL A/C COMPRESSOR
(See page EM-85)
16. INSTALL GENERATOR DRIVE BELT
(See page CH-21)
17. TIGHTEN WATER PUMP PULLEY BOLTS
Torque: 9.3 N·m (95 kgf·cm, 82 in.·lbf)

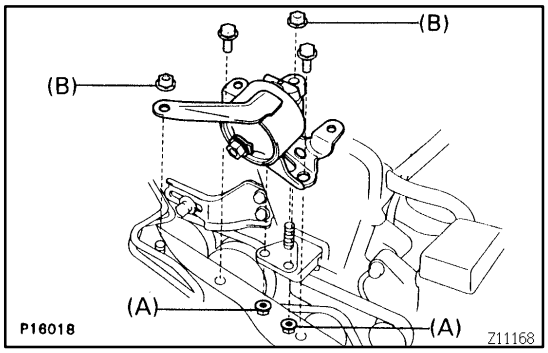

18. INSTALL RH ENGINE MOUNTING INSULATOR
Install the mounting insulator with the 2 bolts and 4 nuts.
Torque:
Bolt: 64 N·m (650 kgf·cm, 47 ft·lbf)
Nut A: 52 N·m (530 kgf·cm, 38 ft·lbf)
Nut B: 28 N·m (290 kgf·cm, 21 ft·lbf)
19. INSTALL RH ENGINE UNDER COVER
20. INSTALL RH FRONT WHEEL
21. w/ CRUISE CONTROL SYSTEM:
INSTALL CRUISE CONTROL ACTUATOR

SA1W7-01

INSTALLATION

Installation is in the reverse order of removal (See page SA-18).

AFTER INSTALLATION, CHECK ABS SPEED SENSOR SIGNAL (See page DI-308) AND FRONT WHEEL ALIGNMENT (See page SA-4)

AX092-02

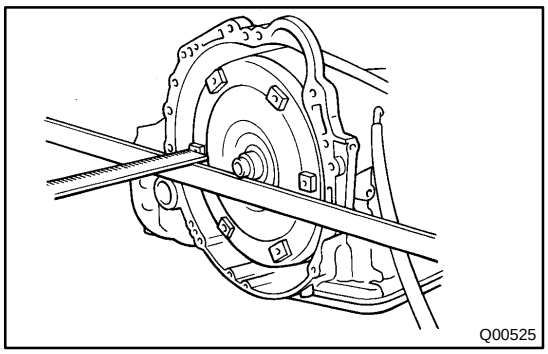

INSTALLATION

1. CHECK TORQUE CONVERTER CLUTCH INSTALLATION

Using a scale and a straight edge, measure the distance from the installation surface to the front surface of the transaxle housing.

Correct distance: More than 13.0 mm (0.512 in.)

2. TRANSAXLE INSTALLATION

Installation is in the reverse order of removal (See page AX-15).

HINT:

- After installation, adjust the throttle cable, shift cable and park/neutral position switch (See page DI-219).
- Fill ATF and check fluid level (See page DI-219).
- Test drive the vehicle.

AX0RE-01

INSTALLATION

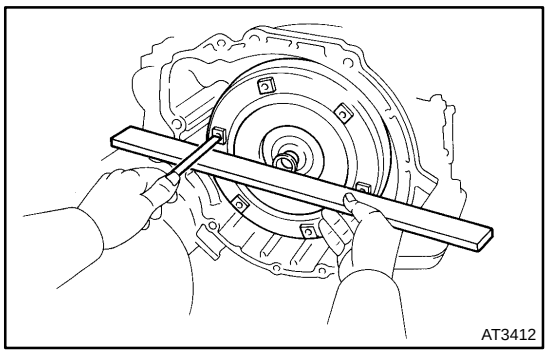

1. CHECK TORQUE CONVERTER CLUTCH INSTALLATION

Using calipers and a straight edge, measure from the installed surface to the front surface of the transaxle housing.

Correct distance: More than 22.8 mm (0.898 in.)

2. TRANSAXLE INSTALLATION

Installation is in the reverse order of removal (See page AX-14).

HINT:

After installation, check and inspect items as follows.

- Fluid level (See page DI-262).
- Front wheel alignment (See page SA-4).
- Road test the vehicle.

BO1EN-03

INSTALLATION

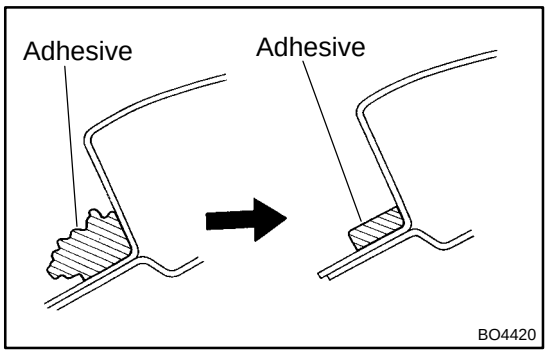

1. CLEAN AND SHAPE CONTACT SURFACE OF BODY

(a) Using a knife, cut away any rough areas on the body.

HINT:

Leave as much of the adhesive on the body as possible.

(b) Clean the cutting surface of the adhesive with a piece of shop rag saturated in cleaner.

HINT:

Even if all the adhesive has been removed, clean the body.

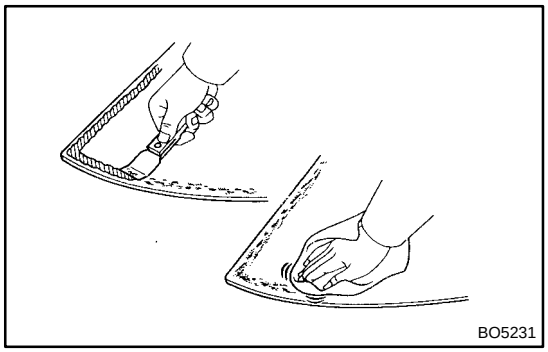

2. CLEAN REMOVED GLASS

Using a scraper, remove the adhesive sticking to the glass.

NOTICE:

Do not touch the glass after cleaning it.

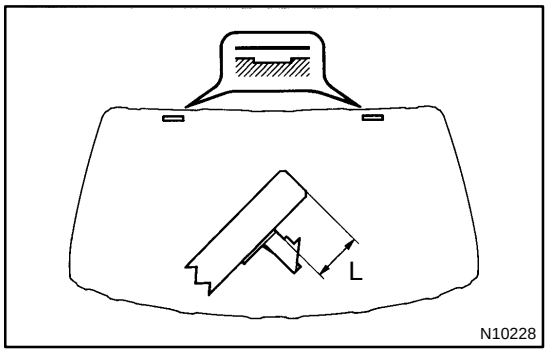

3. REPLACE STOPPER

(a) Remove the damaged stoppers.

(b) Cut off the old adhesive around the stoppers installation area.

NOTICE:

Be careful not to damage the glass.

(c) Clean the installation area.

(d) Attach the stoppers to the glass with the ceramic notch on the glass aligned with the stoppers, as shown in the illustration.

L: 14.8 mm (0.583 in.)

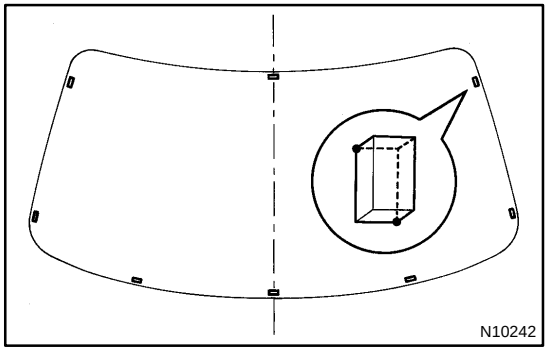

4. REPLACE SPACER

(a) Remove the damaged spacers.

(b) Cut off the old adhesive around the spacers installation area.

NOTICE:

Be careful not to damage the glass.

(c) Clean the installation area.

(d) Attach the spacers to the glass with the ceramic notch on the glass aligned with the spacers, as shown in the illustration.

5. POSITION GLASS

(a) Place the glass in correct position.

(b) Check that all contacting parts of the glass rim are perfectly even.

(c) Place reference marks between the glass and body.

(d) Remove the glass.

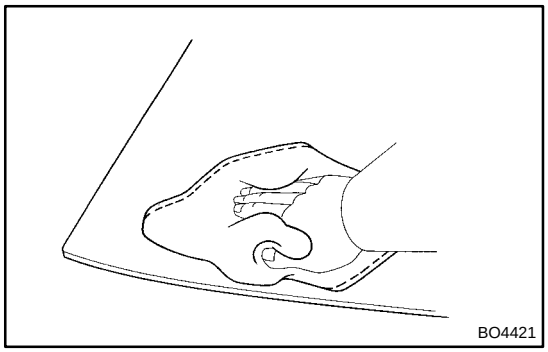

6. CLEAN CONTACT SURFACE OF GLASS

Using a cleaner, clean the contact surface which is black-colored area around the entire glass rim.

NOTICE:

Do not touch the glass surface after cleaning it.

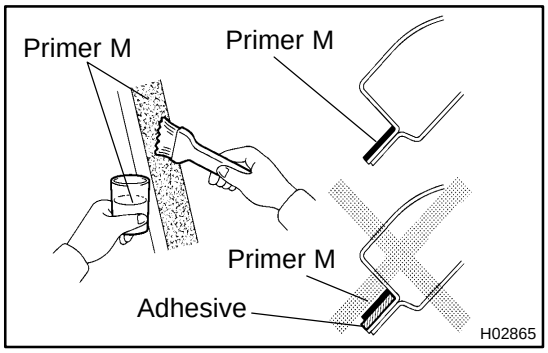

7. COAT CONTACT SURFACE OF BODY WITH PRIMER "M"

Using a brush, coat Primer M to the exposed part of body on the vehicle side.

NOTICE:

- **Let the primer coating dry for 3 minutes or more.**
- **Do not coat Primer M to the adhesive.**
- **Do not keep any of the opened Primer M for later use.**

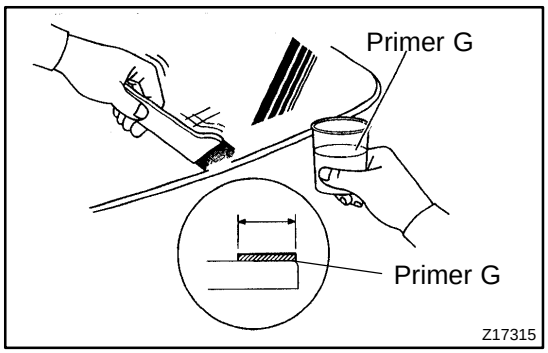

8. COAT CONTACT SURFACE OF GLASS WITH PRIMER "G"

(a) Using a brush or sponge, coat the edge of the glass and contact surface with Primer G.

(b) When the primer is coated wrongly to the area other than the specified, wipe it off with a clean shop rag before the primer dries.

NOTICE:

- **Let the primer coating dry for 3 minutes or more.**
- **Do not keep any of the opened Primer G for later use.**

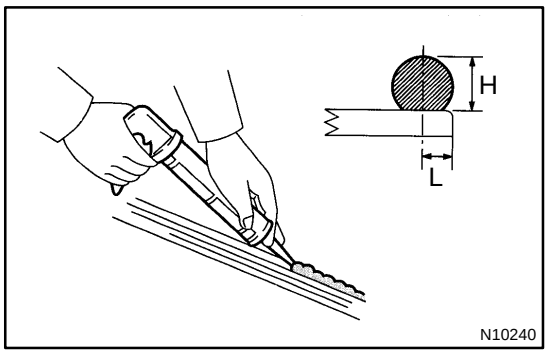

9. APPLY ADHESIVE

(a) Cut off the tip of the cartridge nozzle.

(b) Load the cartridge into the sealer gun.

(c) Coat the glass with adhesive on all contact surfaces along the ridge.

H: 12 mm (0.47 in.)

L: 3 mm (0.12 in.)

10. INSTALL GLASS

(a) Position the glass so that the reference marks are lined up and press in gently along the rim.

(b) Using a spatula, apply adhesive on the glass rim.

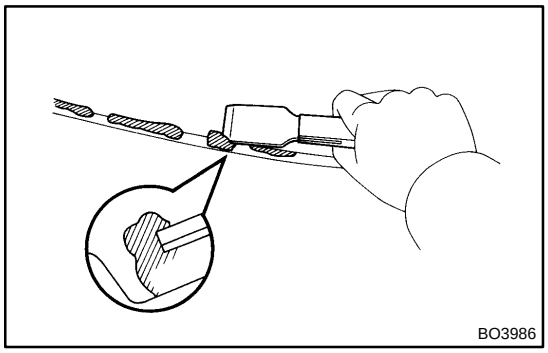

(c) Use a scraper to remove any excess or protruding adhesive.

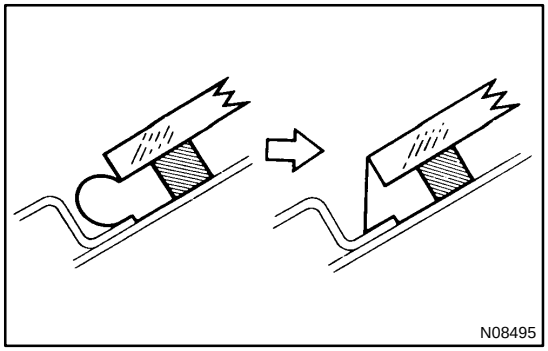

HINT:

Confirm that the dam is attached to the body panel, as shown in the illustration.

(d) Hold the back window glass in place securely with a protective tape or equivalent until the adhesive hardened.

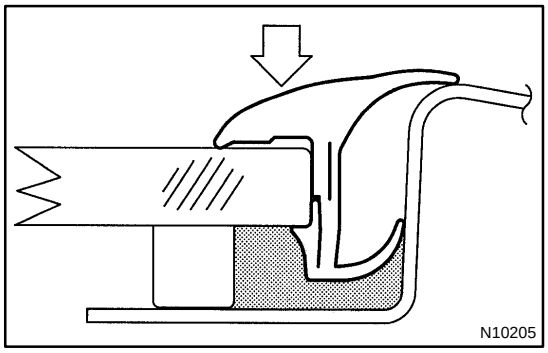

11. INSTALL WINDSHIELD MOULDING

Place the moulding onto the body and install it by hand.

12. INSPECT FOR LEAKS AND REPAIR

(a) Conduct a leak test after the hardening time has elapsed.

(b) Seal any leak with sealant.

Part No. 08833-00030 or equivalent.

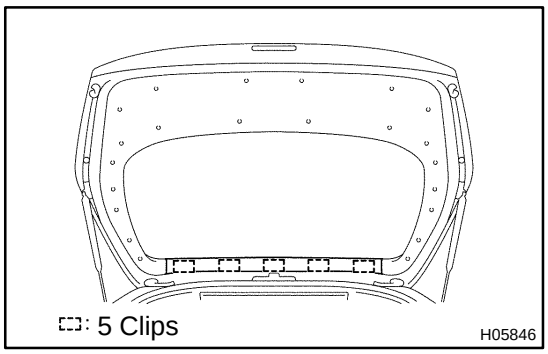

13. INSTALL THESE PARTS:

(a) Back door trim cover LH and RH

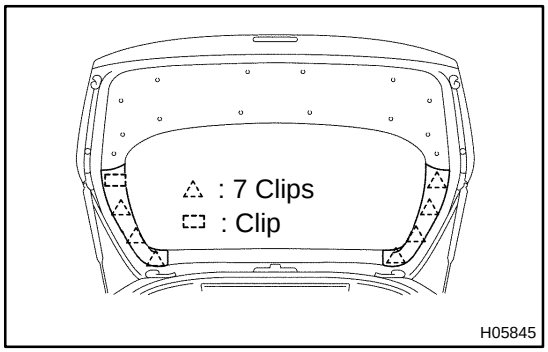

(b) Back door trim board upper

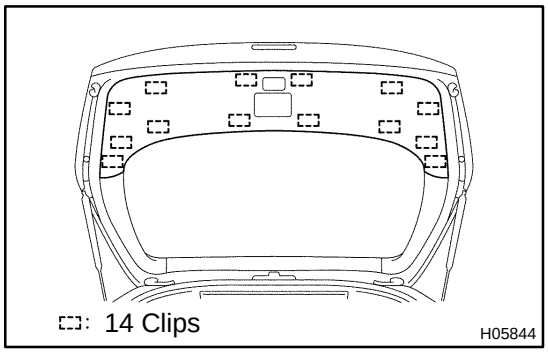

(c) Back door trim board

(d) Rear wiper arm

Torque: 5.4 N·m (55 kgf·cm, 48 in.·lbf)

14. CONNECT DEFOGGER CONNECTOR

BO1EK-03

INSTALLATION

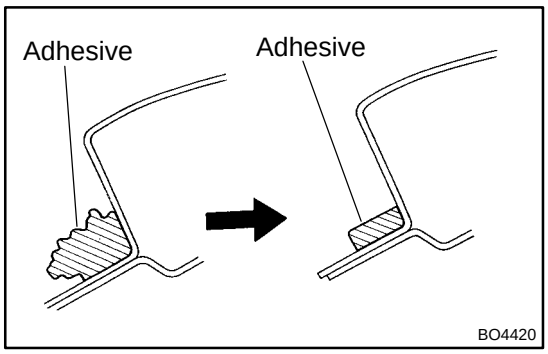

1. CLEAN AND SHAPE CONTACT SURFACE OF BODY

(a) Using a knife, cut away any rough areas on the body.

HINT:

Leave as much of the adhesive on the body as possible.

(b) Clean the cutting surface of the adhesive with a piece of shop rag saturated in cleaner.

HINT:

Even if all the adhesive has been removed, clean the body.

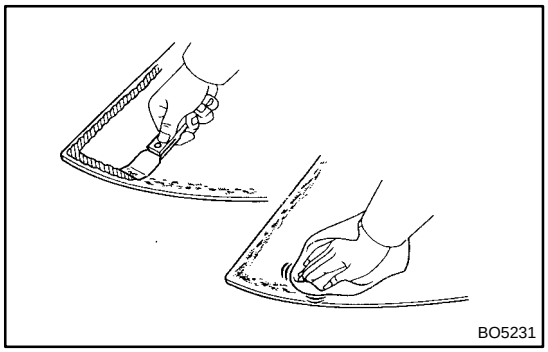

2. CLEAN REMOVED GLASS

Using a scraper, remove the adhesive sticking to the glass.

NOTICE:

Do not touch the glass after cleaning it.

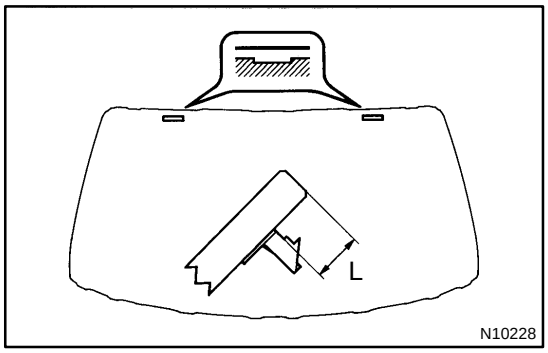

3. REPLACE STOPPER

(a) Remove the damaged stoppers.

(b) Cut off the old adhesive around the stoppers installation area.

NOTICE:

Be careful not to damaged the glass.

(c) Clean the installation area.

(d) Attach the stoppers to the glass with the ceramic notch on the glass aligned with the stoppers, as shown in the illustration.

L: 11.6 mm (0.457 in.)

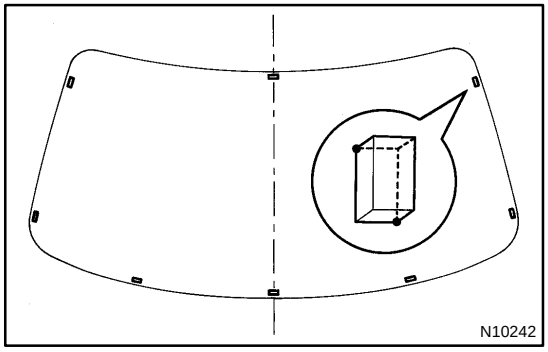

4. INSTALL SPACER

(a) Remove the damaged spacers.

(b) Cut off the old adhesive around the spacers installation area.

NOTICE:

Be careful not to damaged the glass.

(c) Clean the installation area.

(d) Attach the spacers to the glass with the ceramic notch on the glass aligned with the spacers, as shown in the illustration.

5. INSTALL DAM

Install the dam with double-stick tape all the way around the glass except where the stoppers are installed, as shown in the illustration.

NOTICE:

Do not touch the glass surface after cleaning it.

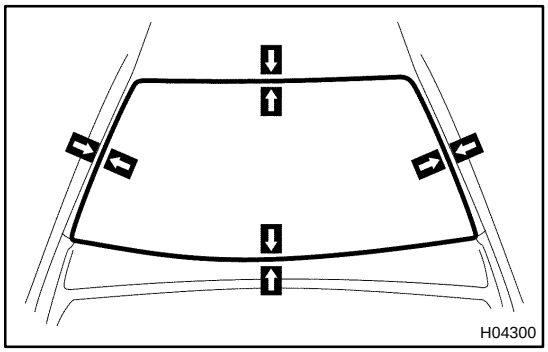

6. POSITION GLASS

(a) Place the glass in correct position.

(b) Check that all contacting parts of the glass rim are perfectly even.

(c) Place reference marks between the glass and body.

(d) Remove the glass.

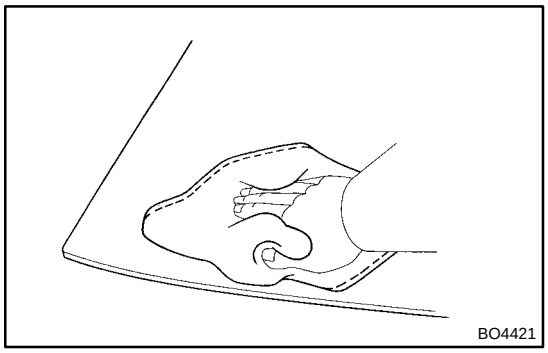

7. CLEAN CONTACT SURFACE OF GLASS

Using a cleaner, clean the contact surface which is black-colored area around the entire glass rim.

NOTICE:

Do not touch the glass surface after cleaning it.

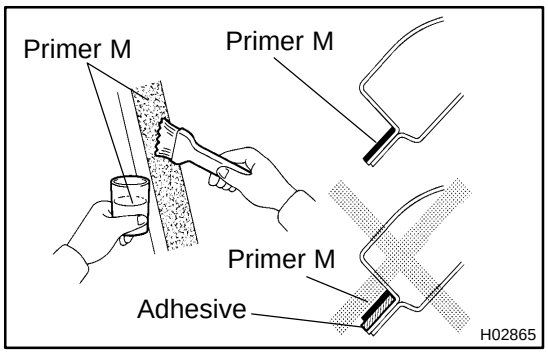

8. COAT CONTACT SURFACE OF BODY WITH PRIMER "M"

Using a brush, coat Primer M to the exposed part of body on the vehicle side.

NOTICE:

- **Let the primer coating dry for 3 minutes or more.**
- **Do not coat Primer M to the adhesive.**
- **Do not keep any of the opened Primer M for later use.**

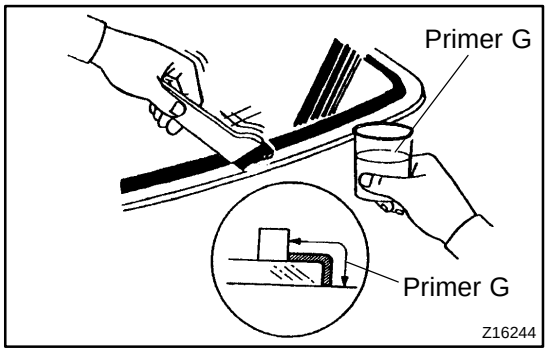

9. COAT CONTACT SURFACE OF GLASS WITH PRIMER "G"

(a) Using a brush or sponge, coat the edge of the glass and contact surface with Primer G.

(b) When the primer is coated wrongly to the area other than the specified, wipe it off with a clean shop rag before the primer dries.

NOTICE:

- **Let the primer coating dry for 3 minutes or more.**
- **Do not keep any of the opened Primer G for later use.**

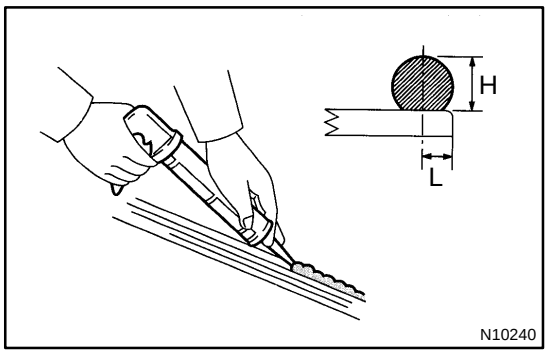

10. APPLY ADHESIVE

(a) Cut off the tip of the cartridge nozzle. Fill the cartrige with adhesive.

(b) Load the cartridge into the sealer gun.

(c) Coat the glass with adhesive on all contact surfaces along the ridge.

H: 12 mm (0.47 in.)
L: 3 mm (0.12 in.)

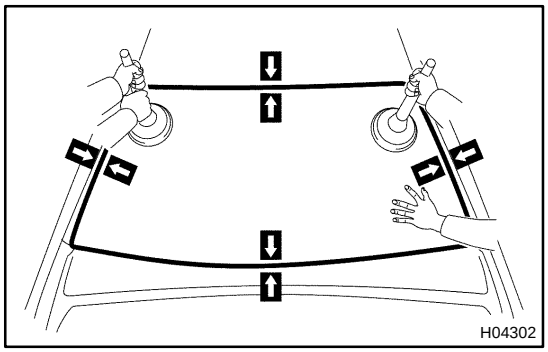

11. INSTALL GLASS

(a) Position the glass so that the reference marks are lined up and press in gently along the rim.

(b) Using a spatula, apply adhesive on the glass rim.

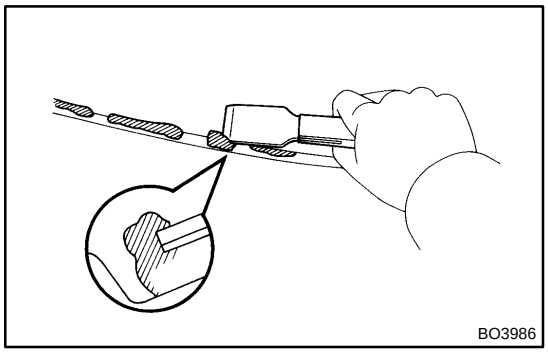

(c) Use a scraper to remove any excess or protruding adhesive.

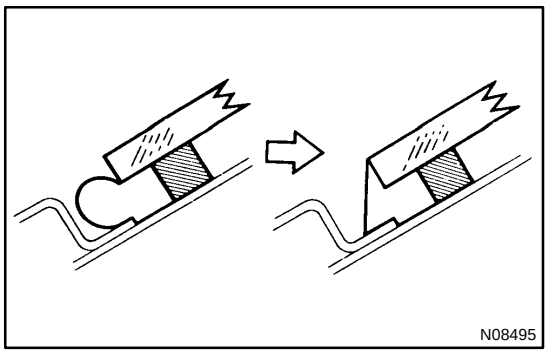

HINT:
Confirm that the dam is attached to the body panel, as shown in the illustration.

(d) Hold the back window glass in place securely with a protective tape or equivalent until the adhesive hardened.

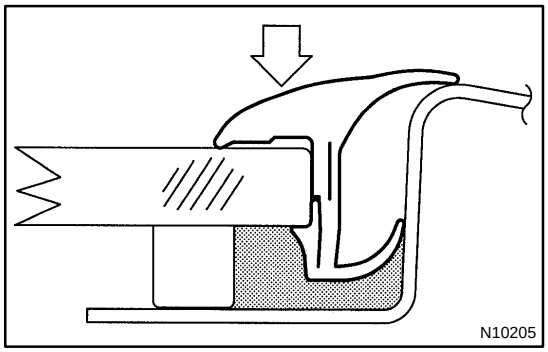

12. INSTALL WINDSHIELD MOULDING

Place the moulding onto the body and install it by hand.

13. INSPECT FOR LEAKS AND REPAIR

(a) Conduct a leak test after the hardening time has elapsed.

(b) Seal any leak with sealant.

Part No. 08833-00030 or equivalent.

14. CONNECT REAR DEFOGGER CONNECTOR

15. INSTALL ROOF SIDE INNER GARNISHES

HINT:
Do the same for LH and RH.

(a) Install the rear seat outer belt through the roof side inner garnish.
(b) Install the roof side inner garnish with the clip.

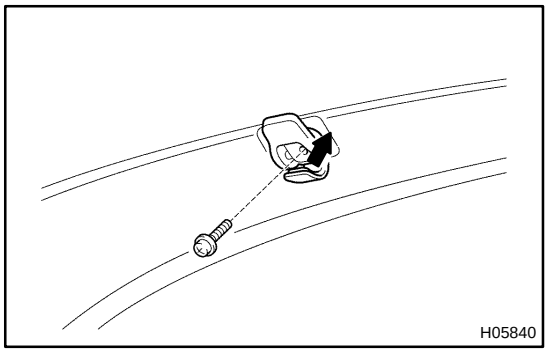

(c) Install the coat hood with the screw.
(d) Install the rear seat outer belt floor anchor bolt.
Torque: 43 N·m (440 kgf·cm, 32 ft·lbf)
(e) Install the front seat outer belt shoulder anchor bolt.
Torque: 43 N·m (440 kgf·cm, 32 ft·lbf)

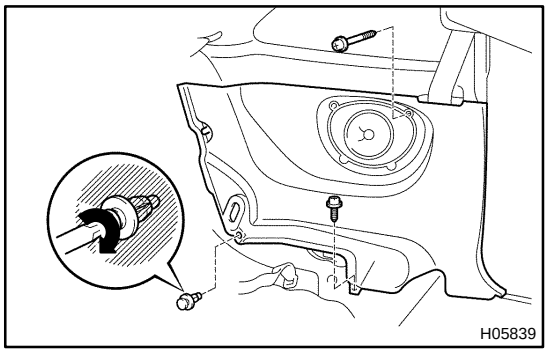

16. INSTALL QUARTER TRIM PANEL

HINT:

Do the same for LH and RH.

(a) Install the quarter trim panel with the 2 screws and clip.

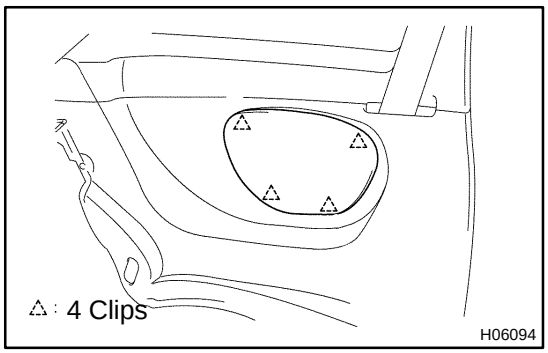

(b) Install the speaker grille.

17. INSTALL THESE PARTS:

(a) Rear seatback hinges
Torque: 8.0 N·m (82, kgf·cm, 71 in.·lbf)
(b) Room partition trim board Lh and RH
(c) Package tray trim panel

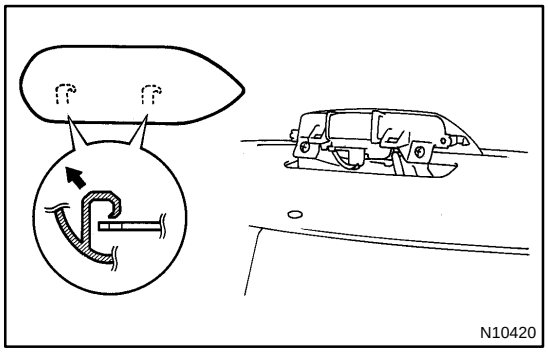

(d) High-mounted stop light and cover

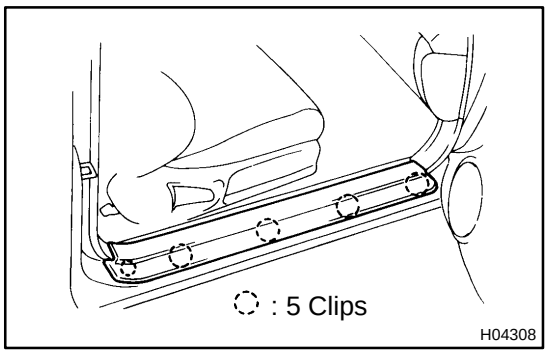

(e) Front door scuff inside plates
(f) Rear seat
(See page BO-126)

MX0BH-01

INSTALLATION

Installation is in the reverse order of removal. (See page MX-4)

HINT:

After installation, check and inspect items as follows.

- Front wheel alignment (See page SA-4).
- Do the road test.

CL06B-01

INSTALLATION

Installation is in the reverse order of removal. (See page CL-5)

HINT:

After installation, bleed system and adjust clutch pedal. (See page CL-2)

CLUTCH UNIT

COMPONENTS

CL06H-03

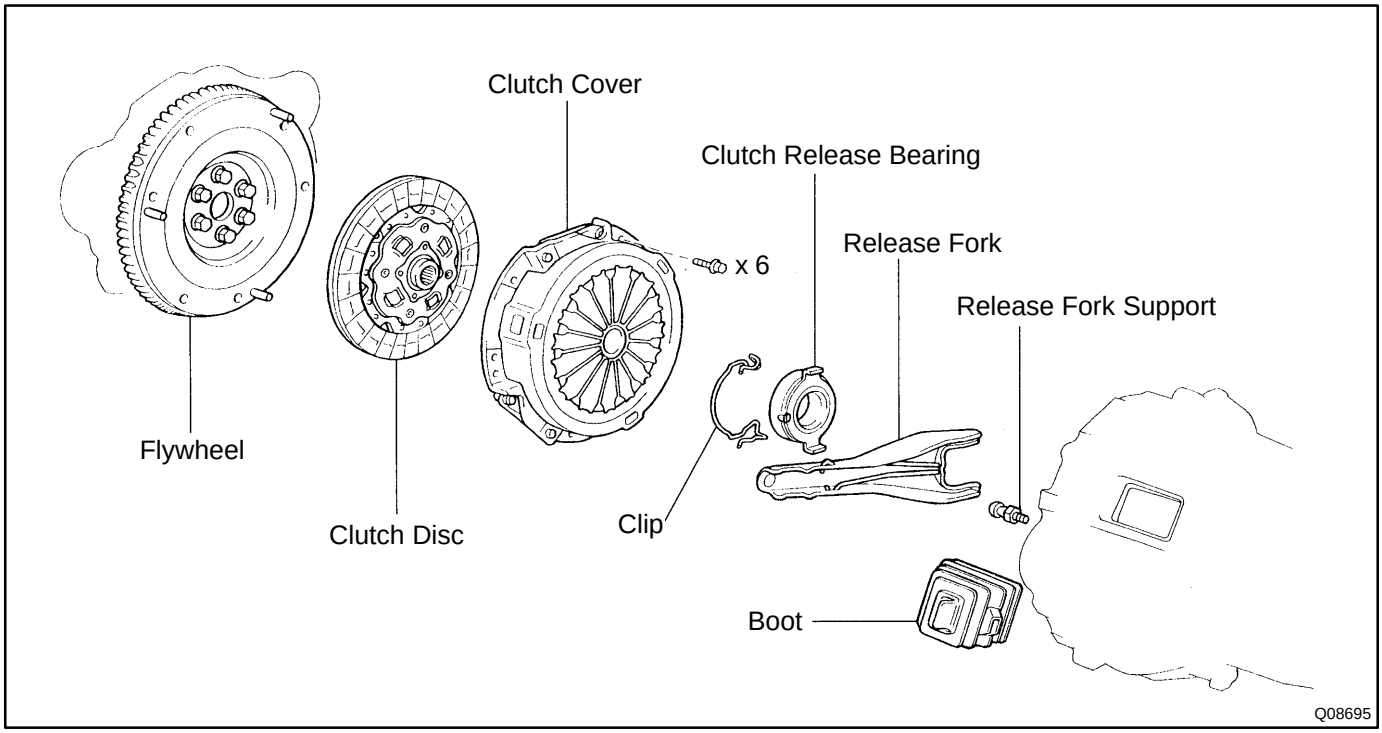

CL06G-01

INSTALLATION

Installation is in the reverse order of removal. (See page CL-10)

HINT:

After installation, bleed the clutch system.

CL06K-04

INSTALLATION

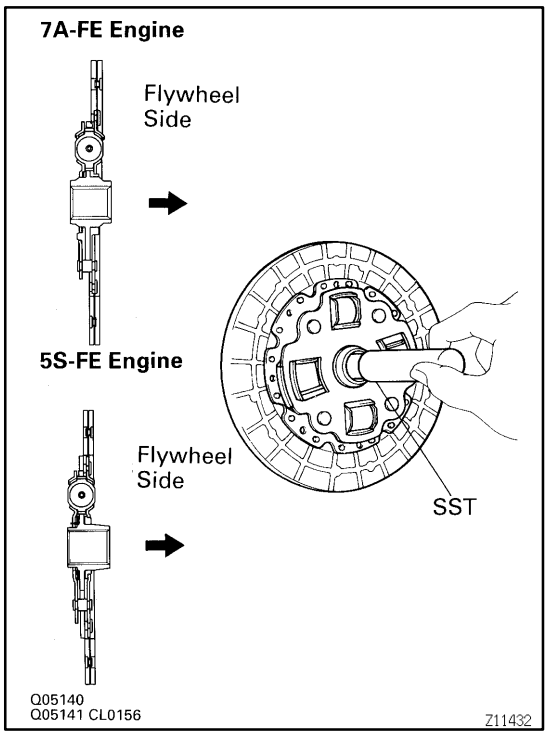

1. INSTALL CLUTCH DISC AND CLUTCH COVER ON FLYWHEEL

(a) Insert SST in the clutch disc, and then set them and the clutch cover in position.

SST 09301-001 10 (7A-FE engine)
09301-00210 (5S-FE engine)

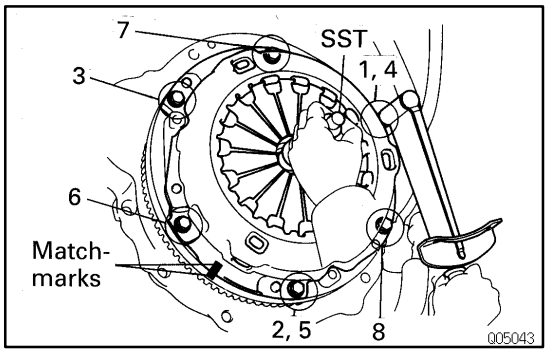

(b) Align the matchmarks on the clutch cover and flywheel.

(c) Torque the bolts on the clutch cover in the order shown.

Torque: 19 N·m (195 kgf·cm, 14 ft·lbf)

HINT:

Temporarily tighten the No.1 and No.2 bolts.

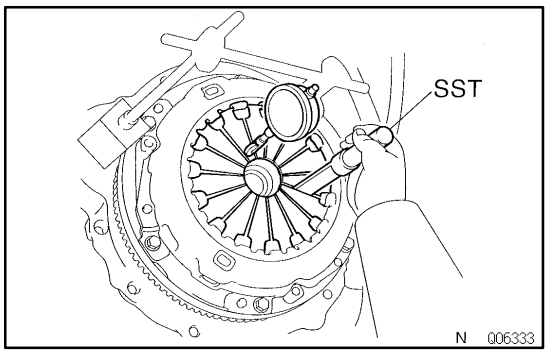

2. CHECK DIAPHRAGM SPRING TIP ALIGNMENT

Using a dial indicator with roller instrument, check the diaphragm spring tip alignment.

Maximum non-alignment: 0.5 mm (0.020 in.)

If alignment is not as specified, using SST, adjust the diaphragm spring tip alignment.

SST 09333-00013

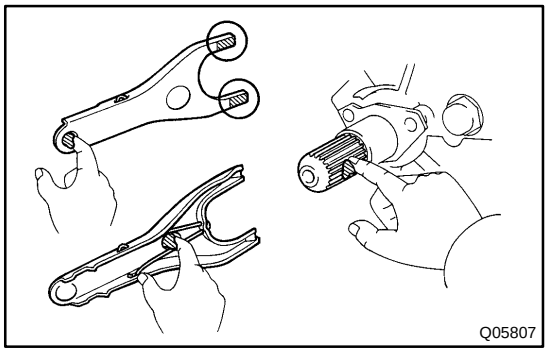

3. APPLY MOLYBDENUM DISULPHIDE LITHIUM BASE GREASE (NLGI NO.2)

(a) Apply release hub grease to the following parts:

- Release fork and hub contact point
- Release fork and push rod contact point
- Release fork pivot point

(b) Apply clutch spline grease.

- Clutch disc spline

HINT:

Recommended grease part number 08887-01706 (100g).

4. INSTALL RELEASE BEARING AND FORK TO TRANSAXLE

Install the bearing to the release fork, and then install them to the transaxle.

5. INSTALL TRANSAXLE TO ENGINE

C52: See page MX-8

S54: See page MX-8

FRONT DRIVE SHAFT (5S-FE)

SA12N-03

COMPONENTS

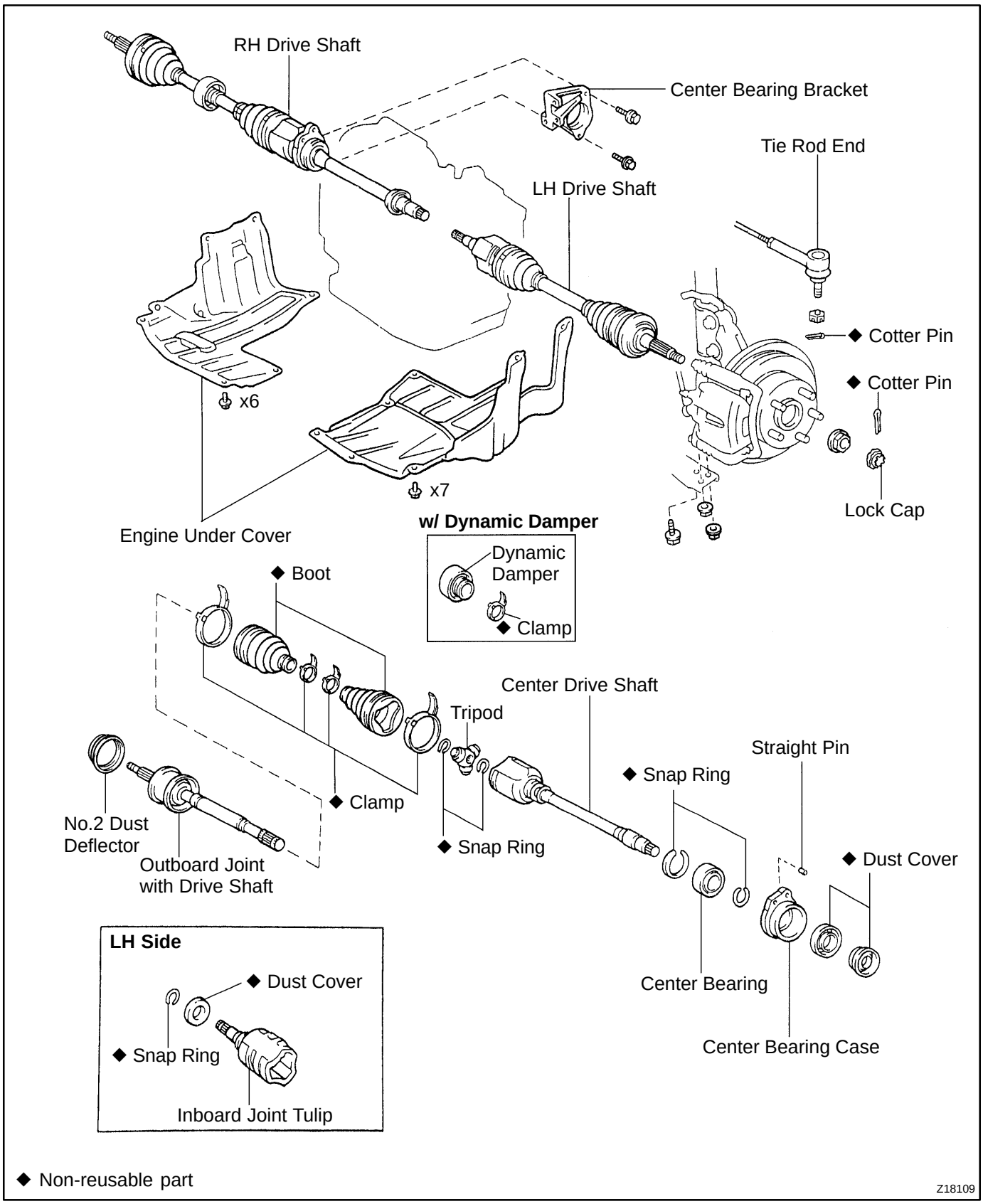

◆ Non-reusable part

Z18109

SA12L-02

INSTALLATION

Installation is in the reverse order of removal (See page SA-10).

AFTER INSTALLATION, CHECK ABS SPEED SENSOR SIGNAL (See page DI-308) AND FRONT WHEEL ALIGNMENT (See page SA-4)

SA134-01

INSTALLATION

1. INSTALL LOWER BALL JOINT

(a) Install the lower ball joint and tighten the nut.
Torque: 103 N·m (1,050 kgf·cm, 76 ft·lbf)

(b) Install a new cotter pin.

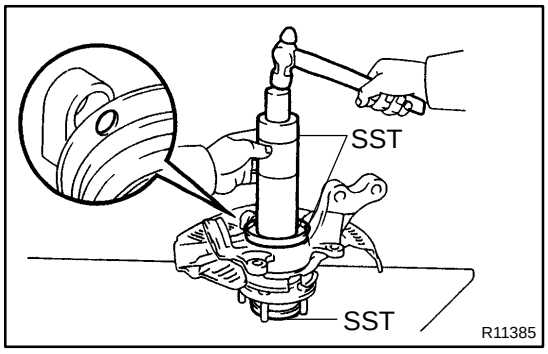

2. INSTALL NEW DUST DEFLECTOR

Using SST and a hammer, install a new dust deflector.

SST 09316- 60011 (09316- 00011, 09316- 00041), 09608-32010

HINT:

Align the hole for the ABS speed sensor in the dust deflector and the one in the steering knuckle.

3. INSTALL FRONT AXLE HUB
(See page SA-15)

SA131-01

INSTALLATION

Installation is in the reverse order of removal (See page SA-43).

AFTER INSTALLATION, CHECK FRONT WHEEL ALIGNMENT (See page SA-4)

SA12Y-01

INSTALLATION

Installation is in the reverse order of removal (See page SA-36).

AFTER INSTALLATION, CHECK FRONT WHEEL ALIGNMENT (See page SA-4)

SA139-01

INSTALLATION

Installation is in the reverse order of removal (See page SA-51).

BO1DX-03

INSTALLATION

1. INSTALL WIPER MOTOR AND LINK

(a) Place the link through the service hole.

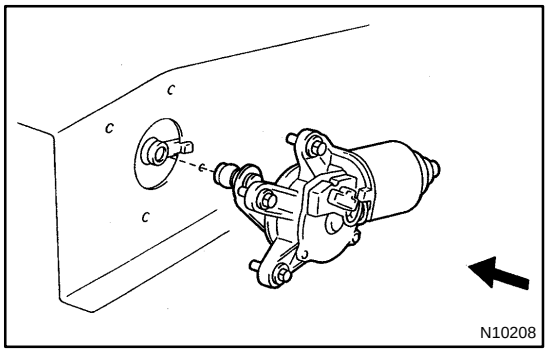

(b) Clip the claw of the wiper link on to the panel.

(c) Connect the motor to the wiper link.

(d) Tighten the 4 bolts.
Torque: 5.4 N·m (55 kgf·cm, 48 in.·lbf)

(e) Install the 6 bolts of the link.
Torque: 5.4 N·m (55 kgf·cm, 48 in.·lbf)

2. INSTALL COWL TOP VENTILATOR LOUVER

3. INSTALL FRONT WIPER ARM

(a) Operate the wipers once and turn the wiper switch OFF, then install the wiper arms.

(b) Adjust the installation positions of the wiper arms to the positions as shown in the illustration.
A: Approx. 36.1 mm (1.421 in.)
B: Approx. 20.6 mm (0.811 in.)
Torque: 21 N·m (205 kgf·cm, 15 ft·lbf)

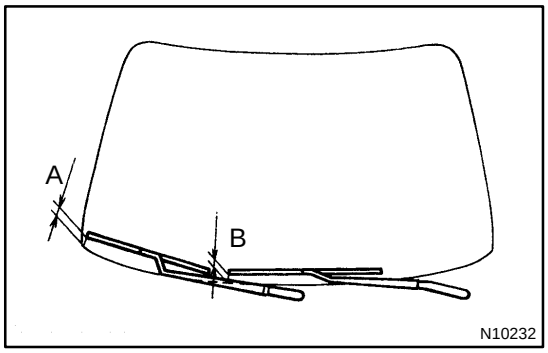

SR0KC-03

INSTALLATION

1. INSTALL PS GEAR ASSEMBLY

(a) Install the gear assembly to the front sub-frame.

(b) Torque the 2 gear assembly set bolts and nuts.

Torque: 127 N·m (1,300 kgf·cm, 94 ft·lbf)

2. INSTALL FRONT SUB-FRAME WITH PS GEAR ASSEMBLY

(See page SA-45)

3. CONNECT 2 ENGINE MOUNTINGS

(a) Front side:

Torque the bolt and nut.

Torque: 88 N·m (890 kgf·cm, 64 ft·lbf)

(b) Rear side:

Torque the bolt.

Torque: 88 N·m (890 kgf·cm, 64 ft·lbf)

4. CONNECT RH AND LH LOWER SUSPENSION ARMS

(See page SA-45)

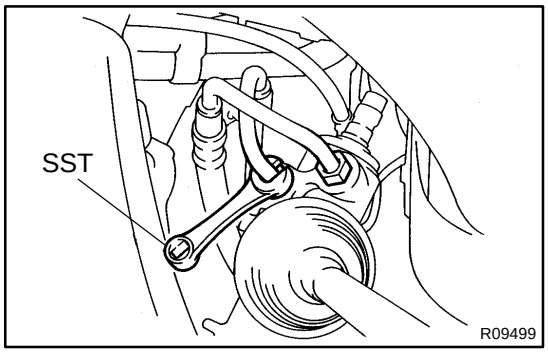

5. CONNECT PRESSURE FEED AND RETURN TUBES

Using SST, connect the tube.

SST 09631-22020

Torque: 36 N·m (365 kgf·cm, 26 ft·lbf)

HINT:

- Use a torque wrench with a fulcrum length of 300 mm (11.81 in.).
- This torque value is effective in case that SST is parallel to a torque wrench.

6. CONNECT TUBE CLAMP BRACKET

Torque the 2 bolts.

Torque: 13 N·m (130 kgf·cm, 9 ft·lbf)

7. CONNECT INTERMEDIATE NO.2 SHAFT

(See page SR-17)

8. INSTALL FRONT EXHAUST PIPE

(a) Install the 2 bolts and 2 new nuts with a new gasket.

Torque: 43 N·m (440 kgf·cm, 32 ft·lbf)

(b) Install the 2 new nuts with a new gasket.

Torque: 62 N·m (630 kgf·cm, 46 ft·lbf)

(c) Torque the 2 bolts.

Torque: 19 N·m (195 kgf·cm, 14 ft·lbf)

9. 7A-FE Engine:

INSTALL OXYGEN SENSOR

10. CONNECT RH AND LH TIE ROD ENDS

(See page SA-15)

11. w/ Airbag:

PLACE FRONT WHEELS FACING STRAIGHT AHEAD

HINT:

Do it with the front of the vehicle jacked up.

12. w/ Airbag:
CENTER SPIRAL CABLE
(See page SR-17)

13. w/ Airbag:
INSTALL STEERING WHEEL

(a) Align the matchmarks on the wheel and steering column main shaft.

(b) Temporarily tighten the wheel set nut.

(c) Connect the connector.

14. BLEED POWER STEERING SYSTEM
(See page SR-4)

15. CHECK STEERING WHEEL CENTER POINT

16. w/ Airbag:
TORQUE STEERING WHEEL SET NUT
Torque: 34 N·m (350 kgf·cm, 25 ft·lbf)

17. w/ Airbag:
INSTALL STEERING WHEEL PAD
(See page SR-17)

18. CHECK FRONT WHEEL ALIGNMENT
(See page SA-4)

19. INSTALL RH AND LH ENGINE UNDER COVERS
Tighten the 18 bolts.

BO1EH-03

INSTALLATION

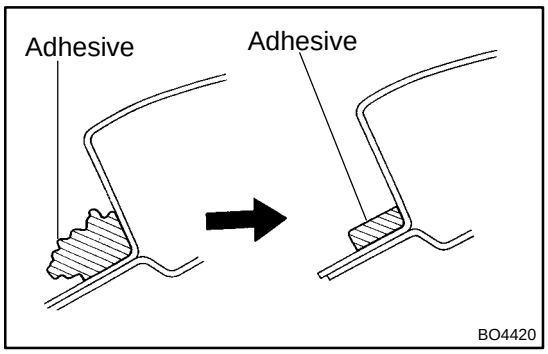

1. CLEAN AND SHAPE CONTACT SURFACE OF BODY

(a) Using a knife, cut away any rough areas on the body.

HINT:

Leave as much of the adhesive on the body as possible.

(b) Clean the cutting surface of the adhesive with a piece of shop rag saturated in cleaner.

HINT:

Even if all the adhesive has been removed, clean the body.

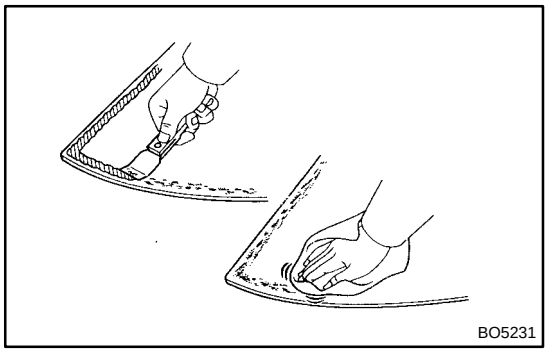

2. CLEAN REMOVED GLASS

Using a scraper, remove the adhesive sticking to the glass.

NOTICE:

Do not touch the glass after cleaning it.

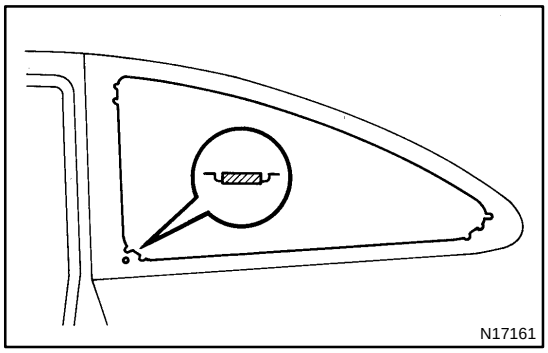

3. REPLACE SPACER

(a) Remove the damaged spacers.

(b) Cut off the old adhesive around the spacers installation area.

NOTICE:

Be careful not to damage the glass.

(c) Clean the installation area.

(d) Attach the spacers to the glass with the ceramic notch on the glass aligned with the spacers, as shown in the illustration.

4. POSITION GLASS

(a) Place the glass in correct position.

(b) Check that all contacting parts of the glass rim are perfectly even.

(c) Place reference marks between the glass and body.

(d) Remove the glass.

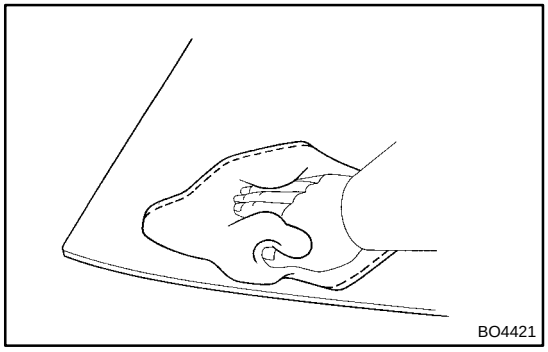

5. CLEAN CONTACT SURFACE OF GLASS

Using a cleaner, clean the contact surface which is black-colored area around the entire glass rim.

NOTICE:

Do not touch the glass surface after cleaning it.

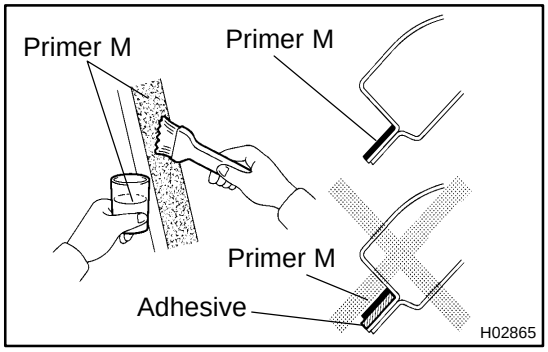

6. COAT CONTACT SURFACE OF BODY WITH PRIMER "M"

Using a brush, coat Primer M to the exposed part of body on the vehicle side.

NOTICE:

- **Let the primer coating dry for 3 minutes or more.**
- **Do not coat Primer M to the adhesive.**
- **Do not keep any of the opened Primer M for later use.**

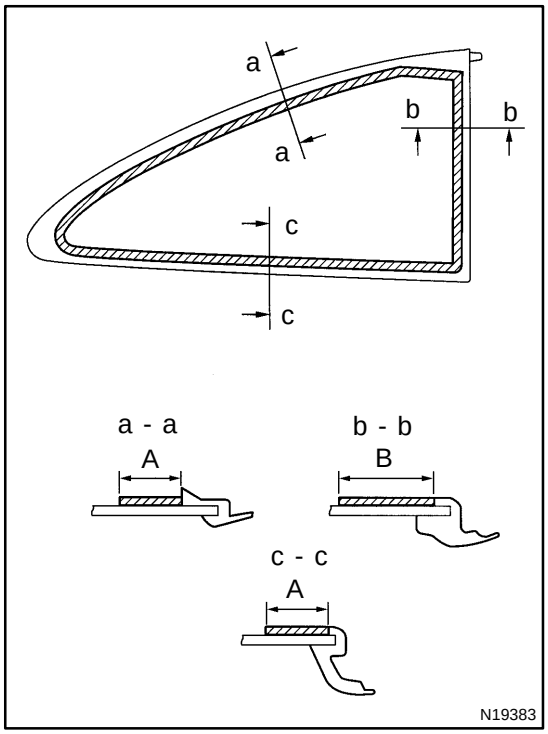

7. COAT CONTACT SURFACE OF GLASS WITH PRIMER "G"

(a) Using a brush or sponge, coat the edge of the glass and contact surface with Primer G.

(b) When the primer is coated wrongly to the area other than the specified, wipe it off with a clean shop rag before the primer dries.

NOTICE:

- **Let the primer coating dry for 3 minutes or more.**
- **Do not keep any of the opened Primer G for later use.**

A: 15 mm (0.59 in.)

B: 30 mm (1.18 in.)

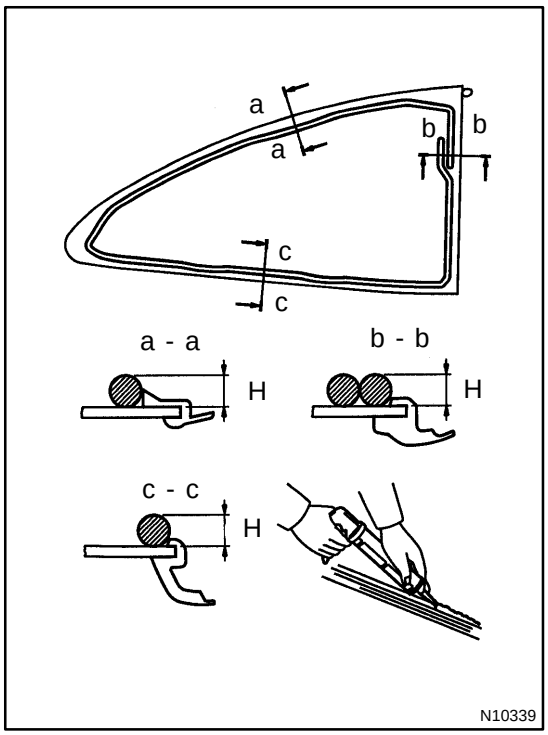

8. APPLY ADHESIVE

(a) Cut off the tip of the cartridge nozzle. Fill the cortridge with adhesive.

(b) Load the cartridge into the sealer gun.

(c) Coat the glass with adhesive, as shown in the illustration.

H: 12 mm (0.47 in.)

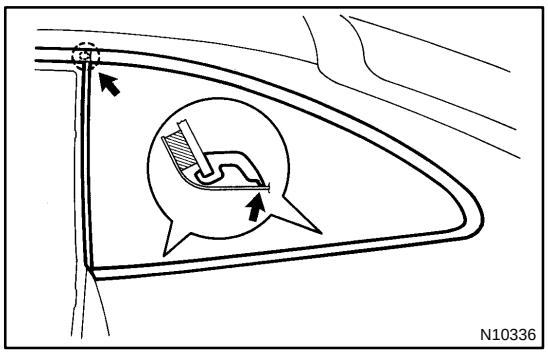

9. INSTALL GLASS

(a) Install the glass to the body.

HINT:

First fit the glass to the moulding and then to the body panel, as shown in the illustration.

(b) Use adhesive tape to keep the glass tight against the body.

10. INSPECT FOR LEAKS AND REPAIR

(a) Conduct a leak test after the hardening time has elapsed.

(b) Seal any leak with sealant.

Part No. 08833-00030 or equivalent.

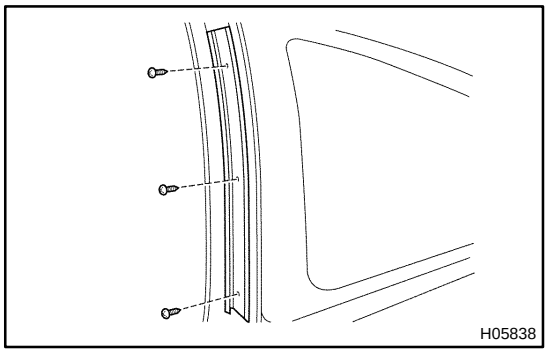

11. INSTALL ROOF SIDE RAIL WEATHERSTRIP RETAINER

Install the roof side rail weatherstrip retainer with the 3 screws.

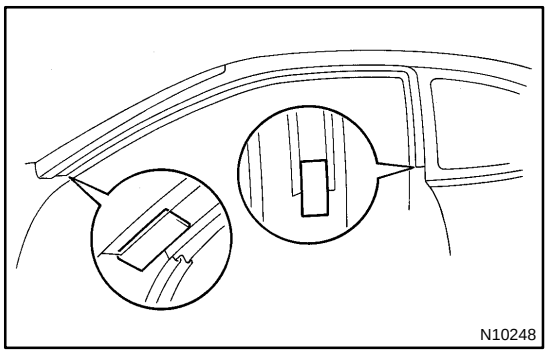

12. INSTALL OUTSIDE GARNISH SEAL

Install the outside garnish seal to the retainer, as shown in the illustration.

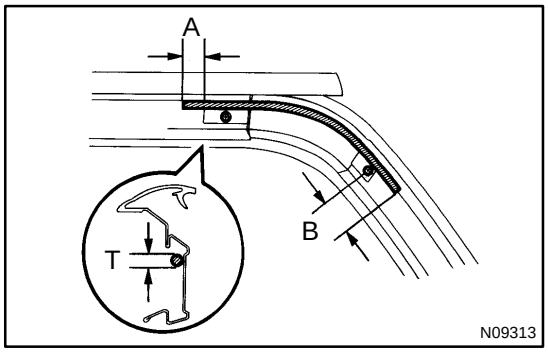

13. APPLY SEAL PACKING

Apply seal packing to the moulding and retainer, as shown in the illustration.

A: 10 mm (0.39 in.) or more

B: 20 mm (0.79 in.) or more

T: 3.0 mm (0.12 in.) or more

Part No. 08826-00080 or equivalent.

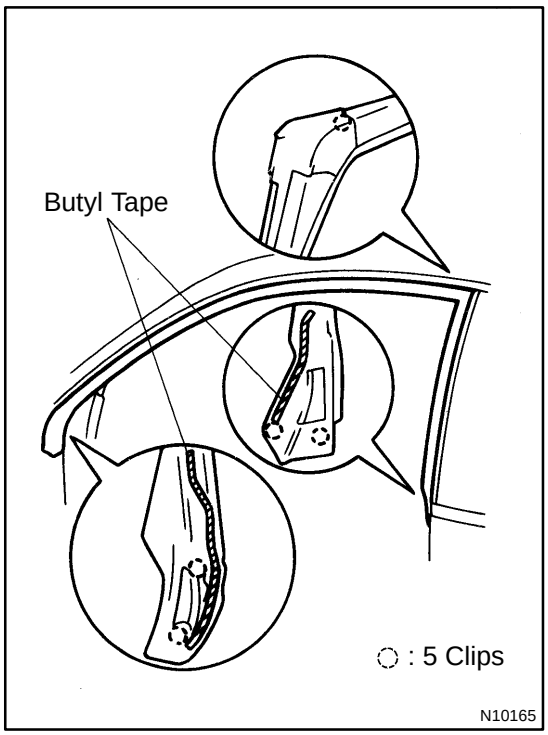

14. INSTALL ROOF SIDE RAIL WEATHERSTRIP

(a) Attach the butyl tape to the weatherstrip, as shown in the illustration.

(b) Install the rear side of the weatherstrip.

15. INSTALL ROOF SIDE INNER GARNISH

(a) Install the rear seat outer belt through the roof side inner garnish.

(b) Install the roof side inner garnish with the clip.

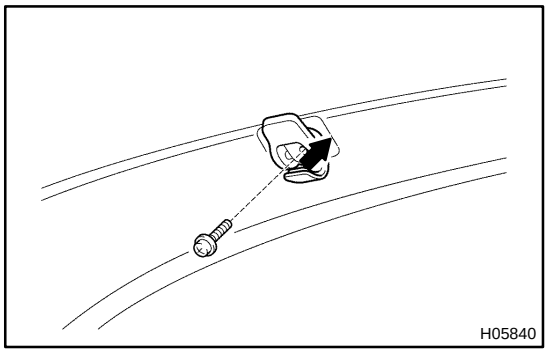

(c) Install the coat hook with a screw.

(d) Install the rear seat outer belt floor anchor bolt.
Torque: 43 N·m (440 kgf·cm, 32 ft·lbf)

(e) Install the front seat outer belt shoulder anchor bolt.
Torque: 43 N·m (440 kgf·cm, 32 ft·lbf)

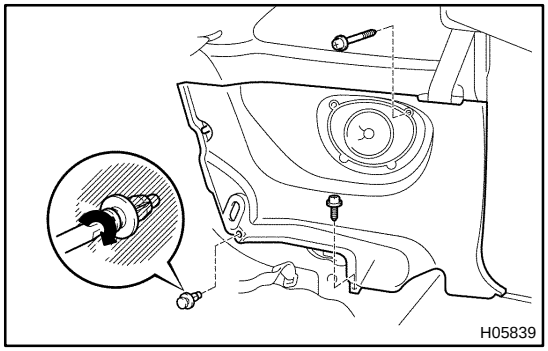

16. INSTALL QUARTER TRIM PANEL

(a) Install the quarter trim panel with the 2 screws and clip.

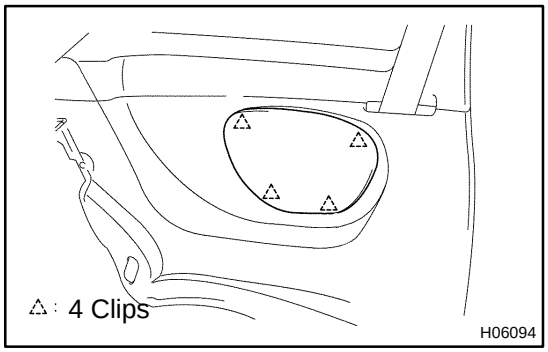

(b) Install the speaker grille.

17. INSTALL THESE PARTS:

(a) Rear seatback lock striker
Torque: 19 N·m (195 kgf·cm, 14 ft·lbf)

(b) Rear seatback hinge
Torque: 8.0 N·m (82 kgf·cm, 71 in.·lbf)

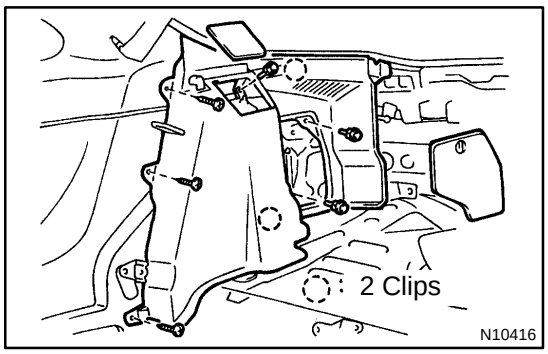

(c) Deck trim side panel
(d) Deck trim side cover
(e) Deck trim rear cover
(f) Package tray trim panel

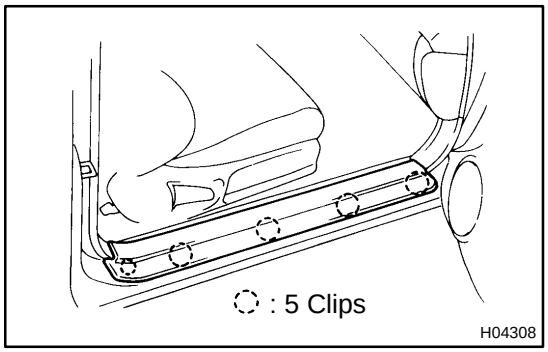

(g) Front door scuff inside plate
(h) Rear seat
(See page BO-126)

SA13C-02

INSTALLATION

Installation is in the reverse order of removal (See page SA-55).

AFTER INSTALLATION, CHECK ABS SPEED SENSOR SIGNAL (See page DI-308) AND REAR WHEEL ALIGNMENT (See page SA-7)

SA13P-01

INSTALLATION

Installation is in the reverse order of removal (See page SA-67).

AFTER INSTALLATION, CHECK REAR WHEEL ALIGNMENT (See page SA-7)

SA13K-01

INSTALLATION

Installation is in the reverse order of removal (See page SA-60).
AFTER INSTALLATION, CHECK REAR WHEEL ALIGNMENT (See page SA-7)

SA13T-01

INSTALLATION

Installation is in the reverse order of removal (See page SA-73).

BO1E2-03

INSTALLATION

1. INSTALL REAR WIPER MOTOR

(a) Install the rear wiper motor with the 3 bolts.
Torque: 5.4 N·m (55 kgf·cm, 48 in.·lbf)

(b) Connect the connector.

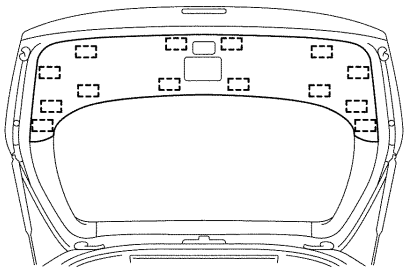

2. INSTALL BACK DOOR TRIM BOARD

Install the back door trim board.

3. INSTALL REAR WIPER ARM AND BLADE

(a) Operate the wiper once and turn the wiper switch OFF, then install the wiper arm.

(b) Adjust the top of the wiper blade to the installation mark printed on the glass.

(c) Torque the nut.
Torque: 5.4 N·m (55 kgf·cm, 48 in.·lbf)

RS032-03

INSTALLATION

(See page SR-17)

SR0K6-03

INSTALLATION

1. INSTALL STEERING COLUMN ASSEMBLY

(a) Torque the 4 column assembly set nuts and bolt.
Torque:
Nut: 25 N·m (260 kgf·cm, 19 ft·lbf)
Bolt: 14 N·m (145 kgf·cm, 11 ft·lbf)

(b) Connect the connectors.

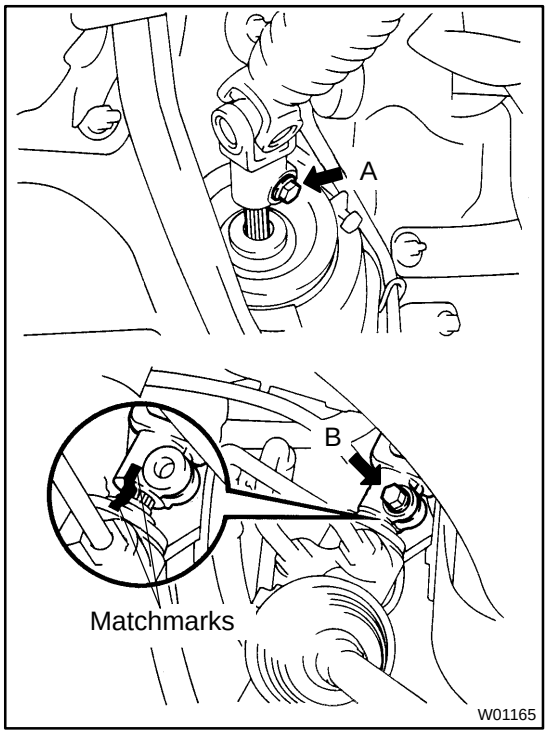

2. INSTALL INTERMEDIATE NO.2 SHAFT

Temporarily tighten the bolt A.

3. CONNECT INTERMEDIATE NO.2 SHAFT

(a) Align the matchmarks on the intermediate No.2 shaft and control valve shaft.

(b) Torque the bolt B.
Torque: 35 N·m (360 kgf·cm, 26 ft·lbf)

(c) Torque the bolt A.
Torque: 35 N·m (360 kgf·cm, 26 ft·lbf)

4. INSTALL NO.2 HEATER TO REGISTER DUCT

Install the clip.

5. INSTALL FINISH PANEL

Tighten the 4 bolts.

6. INSTALL FINISH LOWER NO.1 PANEL

(a) Tighten the 5 panel set screws.

(b) Connect the hood lock release lever with the 2 screws.

(c) Install the fuse box opening cover.

7. INSTALL CLUSTER FINISH LOWER PANEL

8. w/ Airbag:
INSTALL SPIRAL CABLE
(See page BE-14)

9. INSTALL COMBINATION SWITCH

(a) Tighten the 4 screws.

(b) w/ Airbag:
Connect the airbag connector.

(c) Connect the connectors.

10. INSTALL UPPER AND LOWER COLUMN COVERS

Tighten the 3 screws.

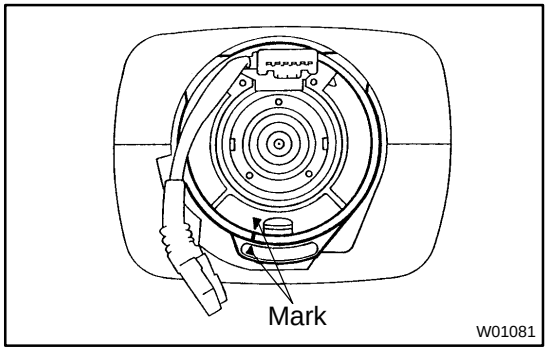

11. CENTER SPIRAL CABLE

(a) Check that the front wheels are facing straight ahead.

(b) Turn the cable counterclockwise by hand until it becomes harder to turn the cable.

(c) Then rotate the cable clockwise about 2.5 turns to align the mark.

HINT:
The cable will rotate about 2.5 turns to either left or right of the center.

12. INSTALL STEERING WHEEL

(a) Align the matchmarks on the wheel and main shaft.

(b) Torque the wheel set nut.

Torque: 34 N·m (350 kgf·cm, 25 ft·lbf)

(c) Connect the connector.

13. w/ Airbag:

INSTALL STEERING WHEEL PAD

NOTICE:

Make sure the wheel pad is installed to the specified torque.If the wheel pad has been dropped, or there are cracks, dents or other defects in the case or connector, replace the wheel pad with a new one.When installing the wheel pad, take care that the wirings do not interfere with other parts and are not pinched between other parts.

(a) Connect the airbag connector.

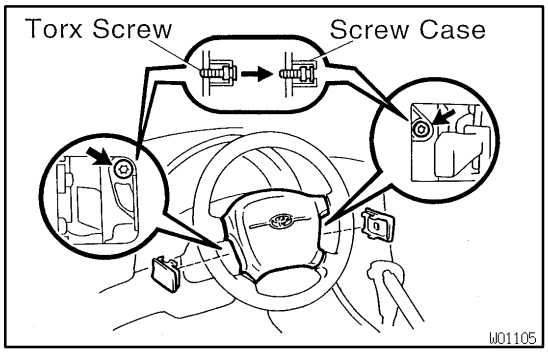

(b) Install the wheel pad after confirming that the circumference groove of the torx screws is caught on the screw case.

(c) Using a torx socket wrench, torque the 2 screws.

Torque: 8.8 N·m (90 kgf·cm, 78 in.·lbf)

(d) Install the steering wheel lower No.2 and No.3 covers.

14. w/o Airbag:

INSTALL STEERING WHEEL PAD

Install the pad with the screw.

15. CHECK STEERING WHEEL CENTER POINT

MX082-03

INSTALLATION

Installation is in the reverse order of removal. (See page MX-4)

HINT:

After installation, check and inspect items as follows.

- Front wheel alignment (See page SA-4).
- Do the road test.

PARTS LAYOUT AND SCHEMATIC DRAWING

LOCATION

EC0GP-01

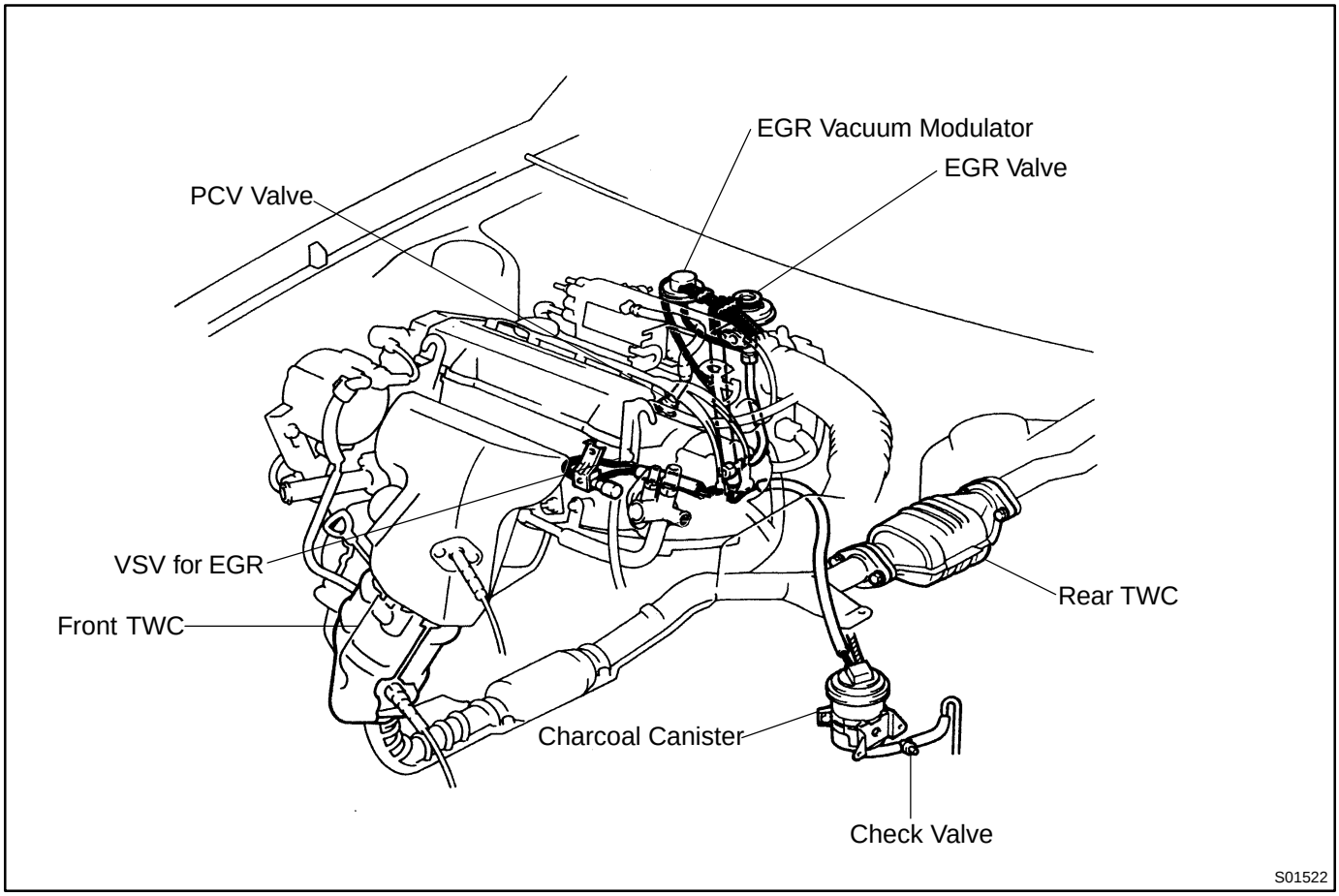

IGNITION SWITCH AND KEY UNLOCK WARNING SWITCH

BE0OP-01

LOCATION

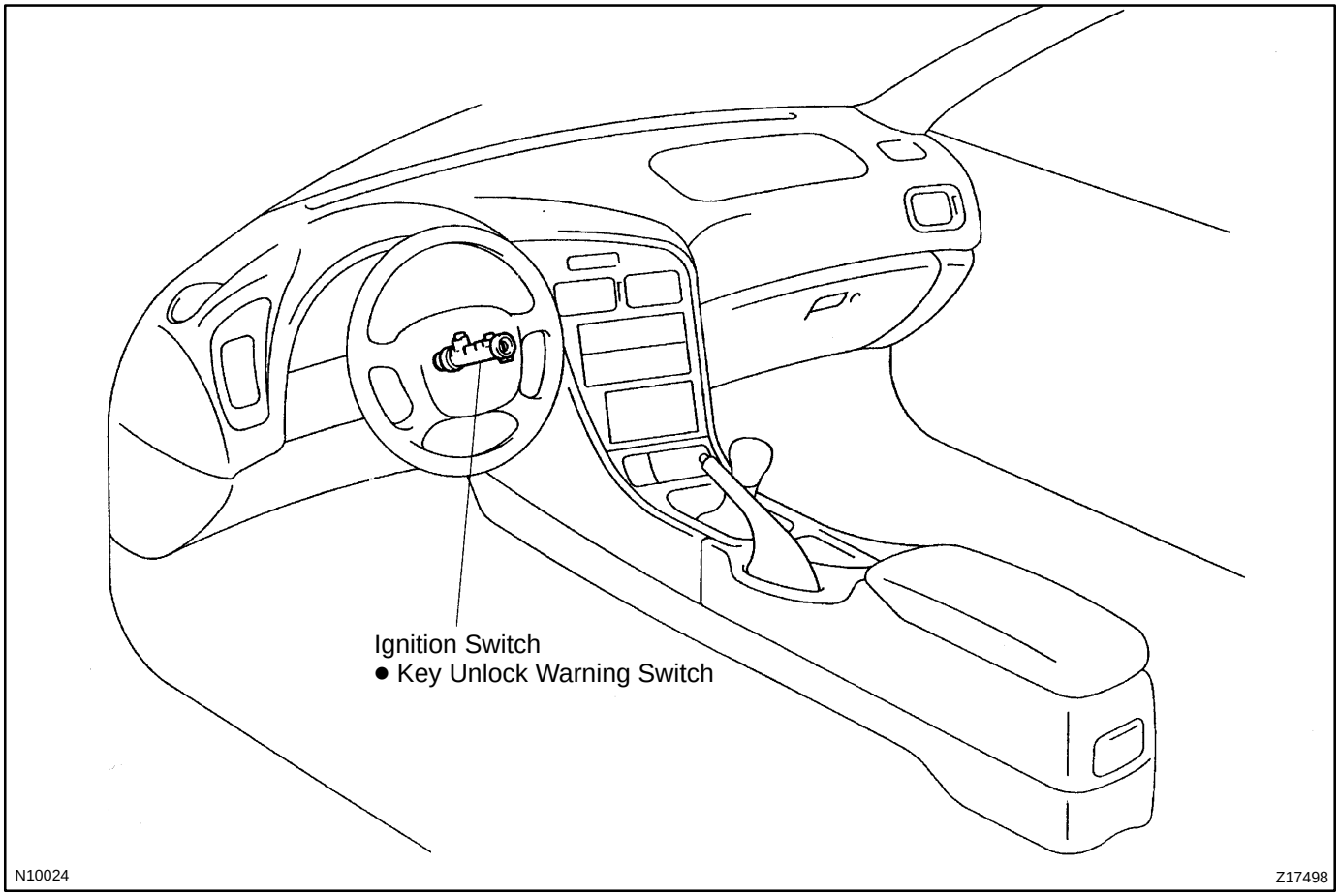

PARTS LAYOUT AND SCHEMATIC DRAWING

EC0FK-02

LOCATION

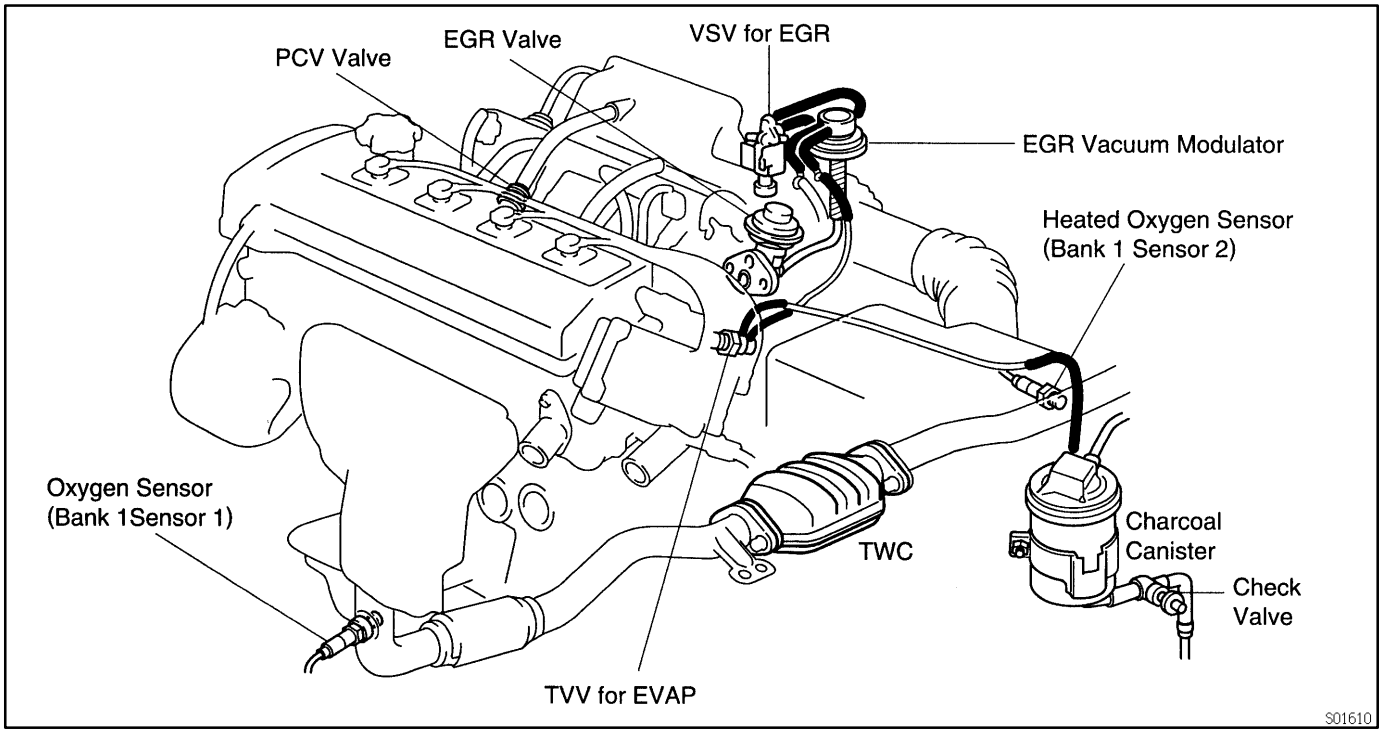

RADIATOR

CO0GH-01

ON-VEHICLE CLEANING

Using water or a steam cleaner, remove any mud or dirt from the radiator core.

NOTICE:

If using a high pressure type cleaner, be careful not to deform the fins of the radiator core. (i.e. Maintain a distance between the cleaner nozzle and radiator core.)

RADIATOR

CO0ZD-01

ON-VEHICLE CLEANING

Using water or a steam cleaner, remove any mud and dirt from the radiator core.

NOTICE:

If using a high pressure type cleaner, be careful not to deform the fins of the radiator core. (i.e. Maintain a distance between the cleaner nozzle and radiator core)

SF0VD-05

COMPONENTS

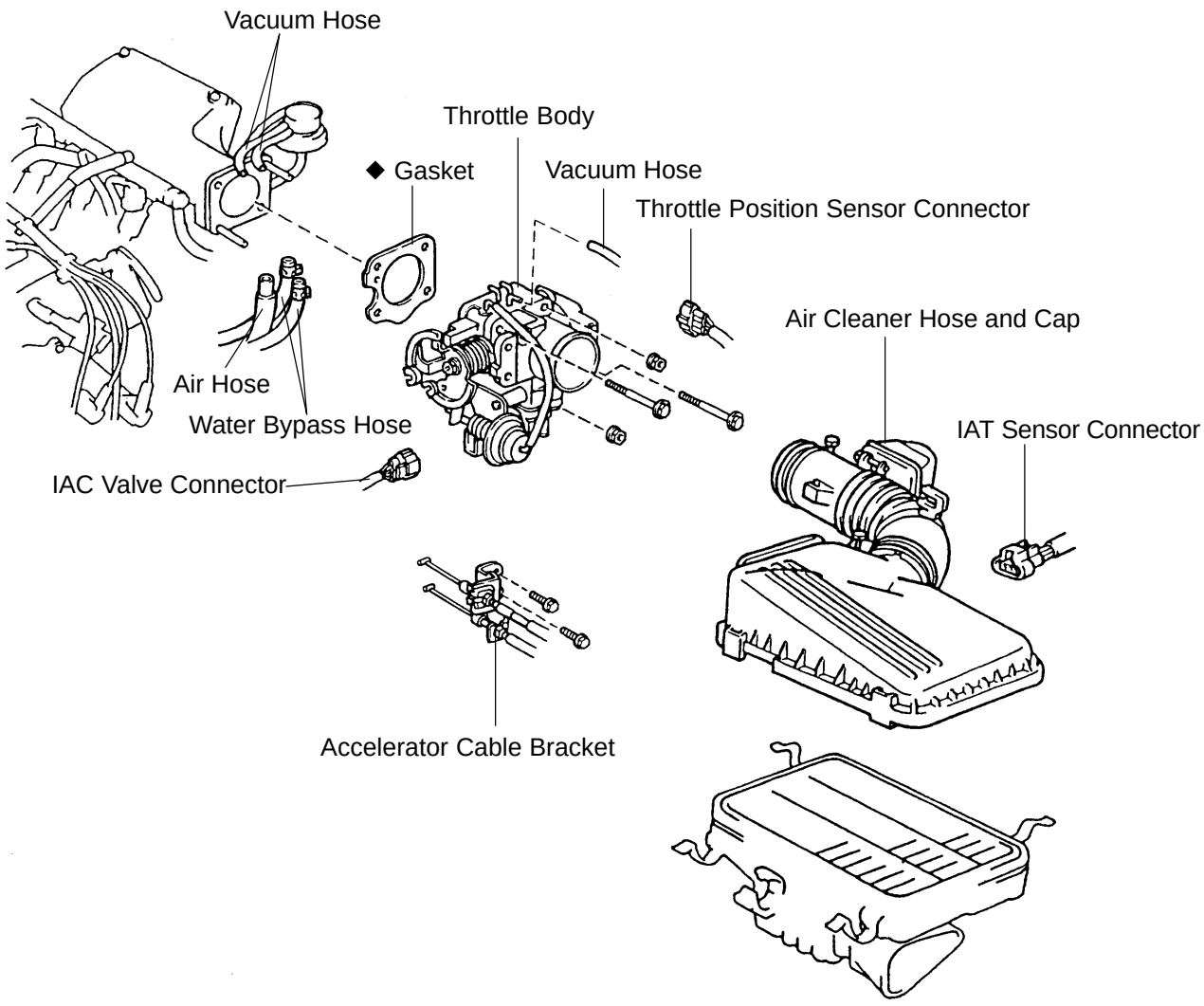

◆ Non-reusable part

N

S01000

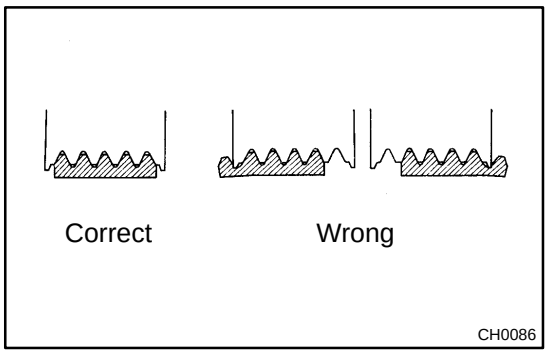

DRIVE BELT

AC0C7-04

ON-VEHICLE INSPECTION

1. INSPECT DRIVE BELT'S INSTALLATION CONDITION

Check that the drive belt fits properly in the ribbed grooves.

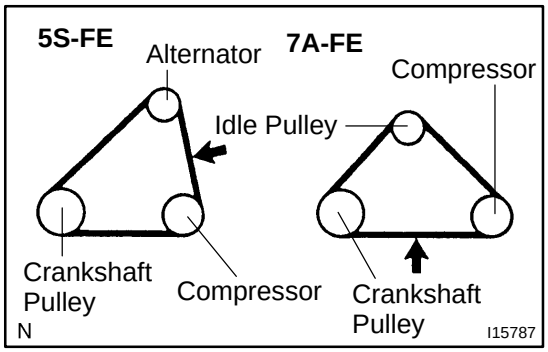

2. INSPECT DRIVE BELT TENSION

Using a belt tension gauge, check the drive belt tension.

Drive belt tension:

5S-FE:

New belt 175 ± 5 lbf

Used belt 110 ± 22 lbf

7A-FE:

New belt 160 ± 25 lbf

Used belt 100 ± 20 lbf

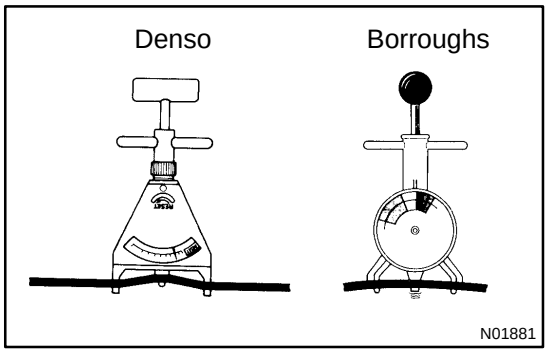

HINT:

- "New belt" refers to a belt which has been used less than 5 minutes on a running engine.
- "Used belt" refers to a belt which has been used on a running engine for 5 minutes or more.
- After installing the drive belt, check that it fits properly in the ribbed grooves.

CH05X-03

ON-VEHICLE INSPECTION

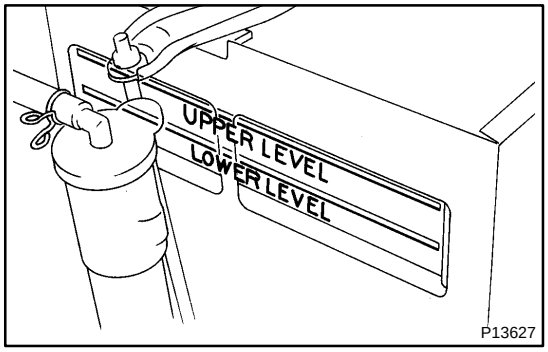

1. CHECK BATTERY ELECTROLYTE LEVEL AND VOLTAGE

(a) Check the electrolyte quantity of each cell.

If under the lower level, replace the battery (or add distilled water if possible). Check the charging system.

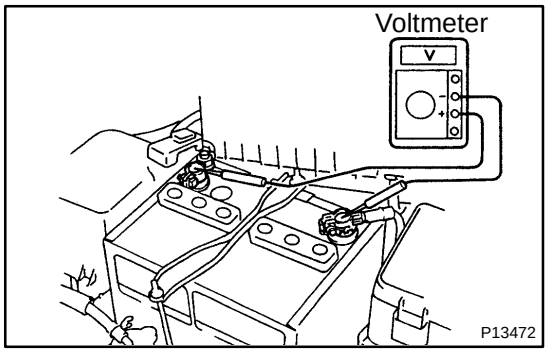

(b) Measure the battery voltage between the negative (-) and positive (+) terminals of the battery.

Standard voltage:

At 20˚C (68˚F): 12.7 - 12.9 V

HINT:

- Before measuring the voltage, turn the ignition switch OFF and turn off the electrical systems (headlight, blower motor, rear defogger etc.) for 60 seconds to remove the surface charge.
- If the vehicle has been running, wait 5 minutes or more after the vehicle stops before measuring the battery voltage.

If the voltage is less than specification, charge the battery.

HINT:

Check the indicator as shown in the illustration.

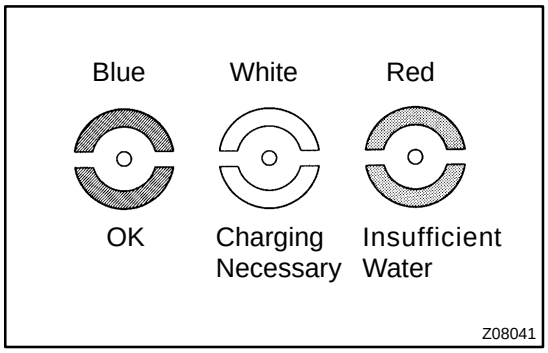

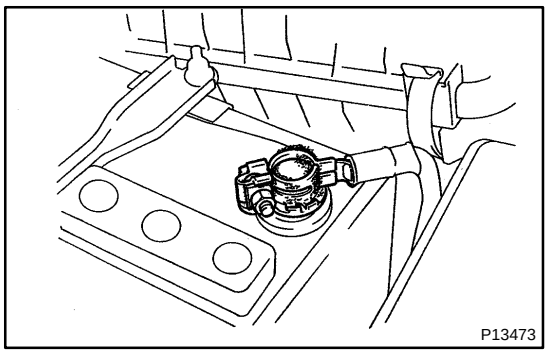

2. CHECK BATTERY TERMINALS, FUSIBLE LINK AND FUSES

(a) Check that the battery terminals are not loose or corroded.

If the terminals are corroded, clean the terminals.

(b) Check the fusible link, H-fuses, M-fuse and fuses for continuity.

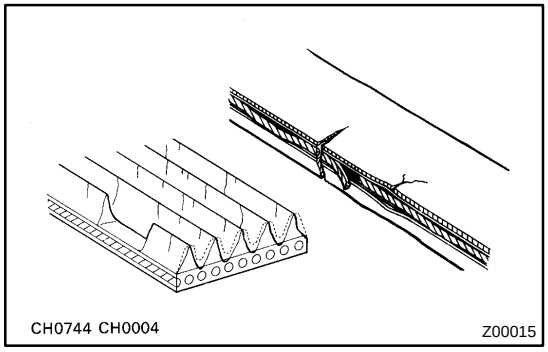

3. NSPECT DRIVE BELT

(a) Visually check the drive belt for excessive wear, frayed cords etc.

If any defect has been found, replace the drive belt.

HINT:

Cracks on the rib side of a drive belt are considered acceptable. If the drive belt has chunks missing from the ribs, it should be replaced.

(b) Using a belt tension gauge, measure the belt tension.

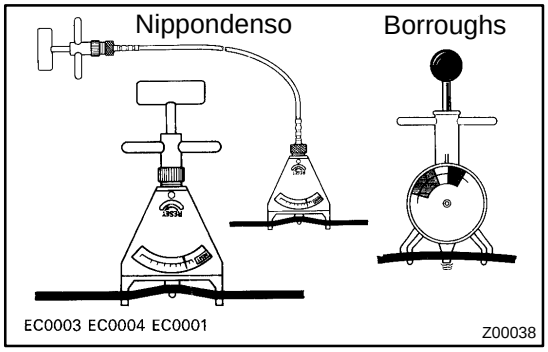

Belt tension gauge:
Nippondenso BTG-20 (95506-00020)
Borroughs No. BT-33-73F

Drive belt tension:

w/ A/C	New belt	175 ± 5 lbf
	Used belt	115 ± 20 lbf
w/o A/C	New belt	125 ± 25 lbf
	Used belt	95 ± 20 lbf

If the belt tension is not as specified, adjust it.

HINT:

- ”New belt” refers to a belt which has been used less than 5 minutes on a running engine.
- ”Used belt” refers to a belt which has been used on a running engine for 5 minutes or more.
- After installing a belt, check that it fits properly in the ribbed grooves.
- Check with your hand to confirm that the belt has not slipped out of the groove on the bottom of the pulley.
- After installing a new belt, run the engine for about 5 minutes and recheck the belt tension.

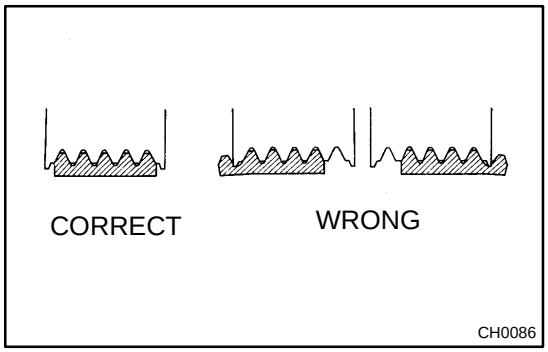

4. VISUALLY CHECK GENERATOR WIRING AND LISTEN FOR ABNORMAL NOISES

(a) Check that the wiring is in good condition.

(b) Check that there is no abnormal noise from the generator while the engine is running.

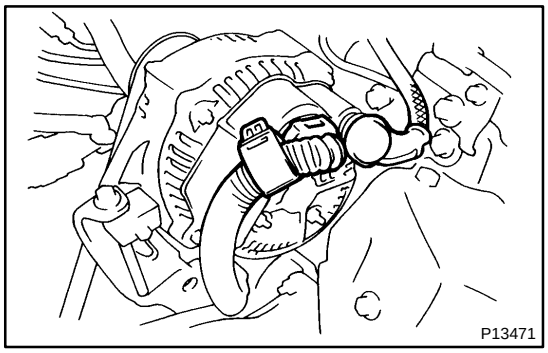

5. CHECK CHARGE WARNING LIGHT CIRCUIT

(a) Warm up the engine and then turn it off.

(b) Turn off all accessories.

(c) Turn the ignition switch ”ON”. Check that the charge warning light is lit.

(d) Start the engine. Check that the light goes off.

If the light does not go off as specified, troubleshoot the charge light circuit.

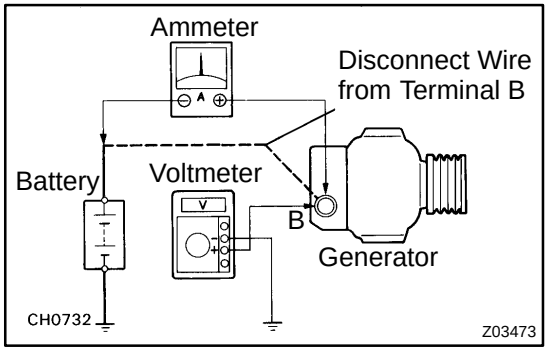

6. INSPECT CHARGING CIRCUIT WITHOUT LOAD

HINT:

If a battery/generator tester is available,
connect the tester to the charging circuit as per
manufacturer’s instructions.

(a) If a tester is not available, connect a voltmeter and ammeter to the charging circuit as follows:

- Disconnect the wire from terminal B of the generator, and connect it to the negative (-) tester probe of the ammeter.

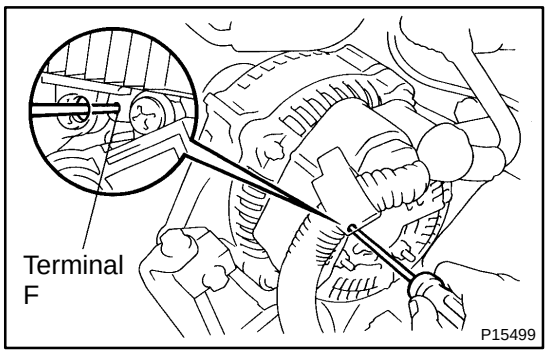

- Connect the positive (+) tester probe of the ammeter to terminal B of the generator.
- Connect the positive (+) tester probe of the voltmeter to terminal B of the generator.
- Ground the negative (-) tester probe of the voltmeter.

(b) Check the charging circuit as follows:
With the engine running between idling to 2,000 rpm, check the reading on the ammeter and voltmeter.
Standard amperage:
10 A or less
Standard voltage:
At 25˚C (77˚F): 14.0 - 15.0 V
At 115˚C (239˚F): 13.5 - 14.3 V

If the voltmeter reading is more than standard voltage, replace the voltage regulator.
If the voltmeter reading is less than standard voltage, check the voltage regulator and generator as follows:

- With terminal F grounded, start the engine and check the voltmeter reading of terminal B.
- If the voltmeter reading is more than standard voltage, replace the voltage regulator.
- If the voltmeter reading is less than standard voltage, check the generator.

7. INSPECT CHARGING CIRCUIT WITH LOAD

(a) With the engine running at 2,000 rpm, turn on the high beam headlights and place the heater blower switch at "HI".

(b) Check the reading on the ammeter.
Standard amperage:
30 A or more

If the ammeter reading is less than the standard amperage, repair the generator.
HINT:
If the battery is fully charged, the indication will sometimes be less than standard amperage.

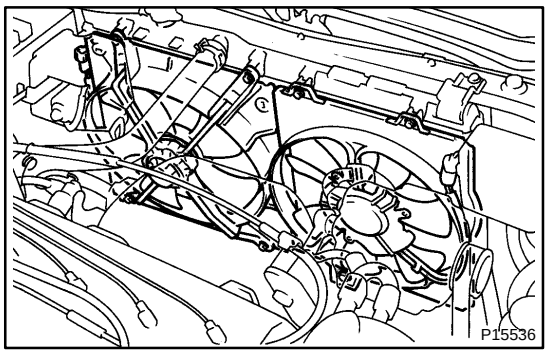

ELECTRIC COOLING FAN

CO18X-01

ON-VEHICLE INSPECTION

1. CHECK COOLING FAN OPERATION WITH LOW TEMPERATURE (Below 83 ˚C (181 ˚F))

(a) Turn the ignition switch ON.

(b) Check that the cooling fan stops.
If not, check the cooling fan relay and ECT switch, and check for a separated connector or severed wire between the cooling fan relay and ECT switch.

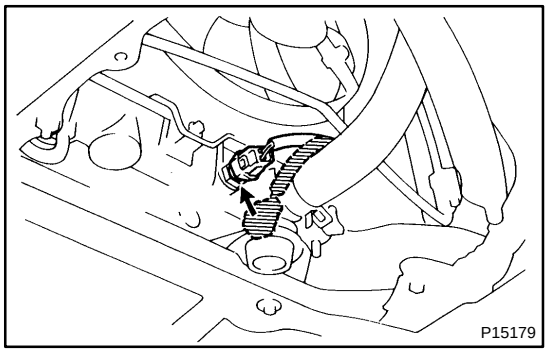

(c) Disconnect the ECT switch connector.

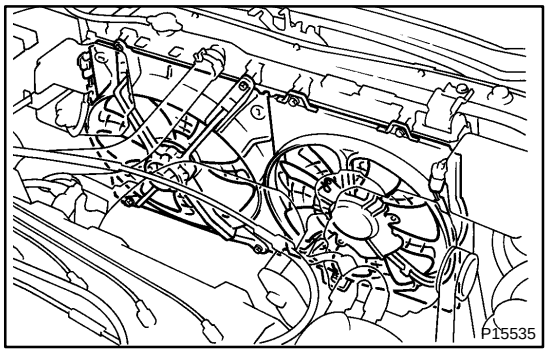

(d) Check that the cooling fan rotates.
If not, check the fan main relay, cooling fan relay, cooling fan, fuses, and check for short circuit between the cooling fan relay and ECT switch.

(e) Reconnect the ECT switch connector.

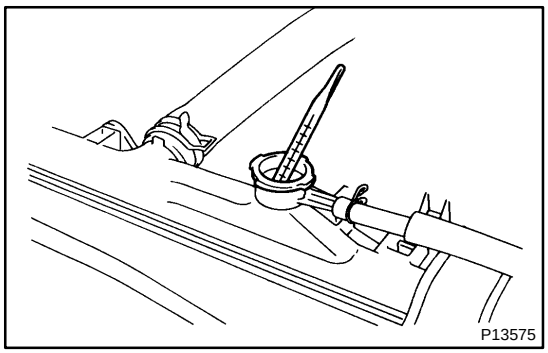

2. CHECK COOLING FAN OPERATION WITH HIGH TEMPERATURE (Above 93 ˚C (199 ˚F))

(a) Start the engine, and raise coolant temperature to above 93 ˚C (199 ˚F).

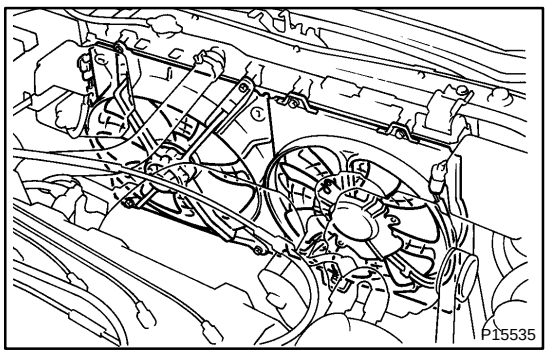

(b) Check that the cooling fan rotates.
If not, replace the ECT switch.

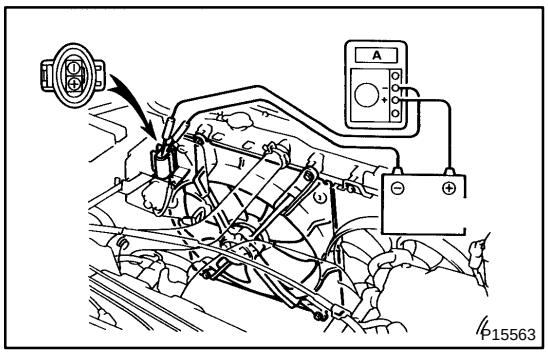

3. INSPECT NO. 1 COOLING FAN

(a) Disconnect the cooling fan connector.
(b) Connect battery and ammeter to the connector.
(c) Check that the cooling fan rotates smoothly, and check the reading on the ammeter.
Standard amperage:
5.7 - 7.7 A
(d) Reconnect the cooling fan connector.

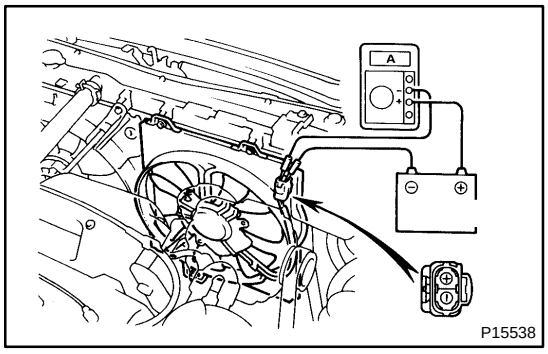

4. INSPECT NO. 2 COOLING FAN

(a) Disconnect the cooling fan connector.
(b) Connect battery and ammeter to the connector.
(c) Check that the cooling fan rotates smoothly, and check the reading on the ammeter.
Standard amperage:
6.4 - 7.4 A
(d) Reconnect the cooling fan connector.

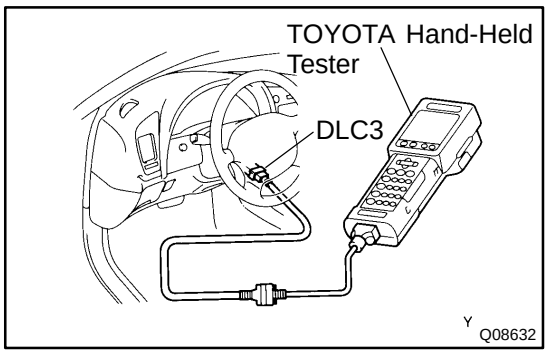

FUEL PUMP

SF0W6-02

ON-VEHICLE INSPECTION

1. CHECK FUEL PUMP OPERATION

(a) Connect the TOYOTA hand-held tester to the DLC3.

(b) Turn the ignition switch ON and TOYOTA hand-held tester main switch ON.

NOTICE:

Do not start the engine.

(c) Select the active test mode on the TOYOTA hand-held tester.

(d) Please refer to the TOYOTA hand-held tester operator's manual for further details.

(e) If you have no TOYOTA hand-held tester, connect the positive (+) and negative (-) leads from the battery to the fuel pump connector.

(f) Check that there is pressure in the fuel inlet hose from the fuel filter.

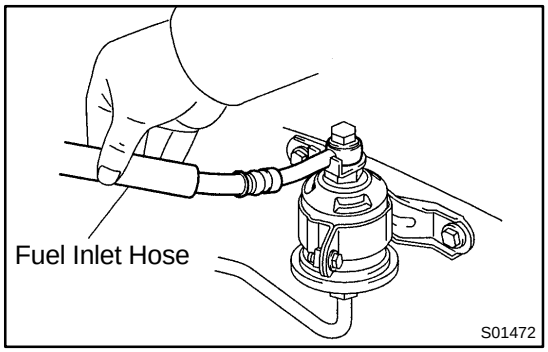

HINT:

If there is fuel pressure, you will hear the sound of fuel flowing.

If there is no pressure, check these parts:

- Fusible link
- H-fuse
- Fuses
- EFI main relay
- Circuit opening relay
- Fuel pump
- ECM
- Wiring connections

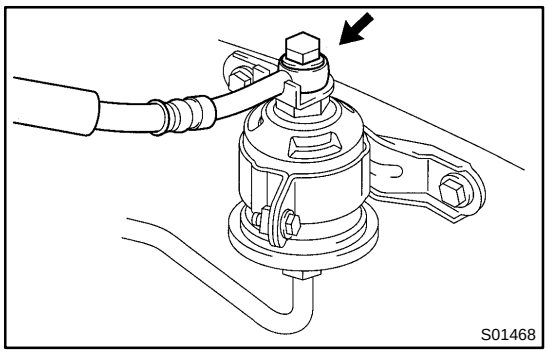

(g) Turn the ignition switch OFF.

(h) Disconnect the TOYOTA hand- held tester from the DLC3.

2. CHECK FUEL PRESSURE

(a) Check the battery positive voltage is above 12 V.

(b) Disconnect the negative (-) terminal cable from the battery.

(c) Remove the union bolt and 2 gaskets, and disconnect the fuel inlet hose from the fuel filter outlet.

CAUTION:

- **Put a shop towel under the fuel filter.**
- **Slowly loosen the union bolt.**

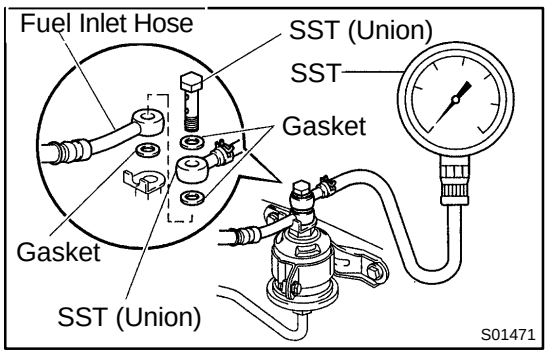

(d) Install the fuel inlet hose and SST (pressure gauge) to the fuel filter outlet with the 3 gaskets and SST (union bolt).
SST 09268-45012 (09268-41190, 90405-06167)
Torque: 29 N·m (300 kgf·cm, 22 ft·lbf)

(e) Wipe off any splattered gasoline.

(f) Reconnect the negative (-) terminal cable to the battery.

(g) Connect the TOYOTA hand-held tester to the DLC3 (See step 1 in check fuel pump operation (a) to (f)).

(h) Turn the ignition switch ON.
(i) Measure the fuel pressure.
Fuel pressure:
265 - 304 kPa (2.7 - 3.1 kgf/cm^2, 38 - 44 psi)

If pressure is high, replace the fuel pressure regulator.
If pressure is low, check these parts:
- Fuel hoses and connections
- Fuel pump
- Fuel filter
- Fuel pressure regulator

(j) Disconnect the TOYOTA hand-held tester from the DLC3.
(k) Reinstall the fuse cover on the instrument panel.
(l) Start the engine.
(m) Measure the fuel pressure at idle.
Fuel pressure:
226 - 265 kPa (2.3 - 2.7 kgf/cm^2, 33 - 38 psi)
(n) Stop the engine.
(o) Check that the fuel pressure remains as specified for 5 minutes after the engine has stopped.
Fuel pressure:
147 kPa (1.5 kgf/cm^2, 21 psi) or more

If pressure is not as specified, check the fuel pump, pressure regulator and/or injectors.
(p) After checking fuel pressure, disconnect the negative (-) terminal cable from the battery and carefully remove the SST to prevent gasoline from splashing.
SST 09268-45012
(q) Reconnect the fuel inlet hose with 2 new gaskets and the union bolt.
Torque:29 N·m (300 kgf·cm, 21 ft·lbf)
(r) Reconnect the negative (-) terminal cable to the battery.
(s) Check for fuel leakage.

3. REMOVE REAR SEAT CUSHION

4. REMOVE SERVICE HOLE COVER

5. DISCONNECT FUEL PUMP AND SENDER GAUGE CONNECTOR

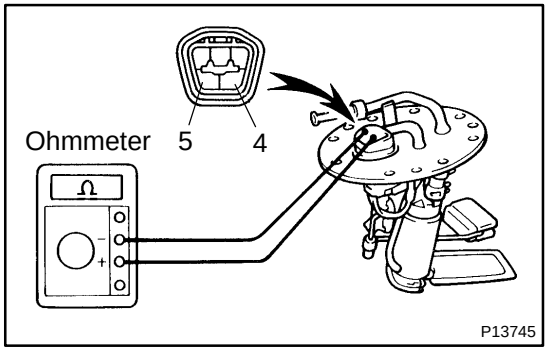

6. INSPECT FUEL PUMP RESISTANCE

Using an ohmmeter, measure the resistance between terminals 4 and 5.
Resistance: 0.2 - 3.0 Ω at 20˚C (68˚F)

If the resistance is not as specified, replace the fuel pump, lead wire or fuel pump braket.

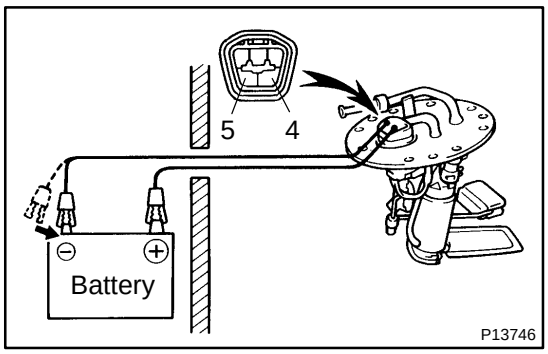

7. INSPECT FUEL PUMP OPERATION

Connect a tester lead from terminal 4 of the connector to the positive (+) terminal of the battery; connect another tester lead from terminal 5 of the connector to the negative (-) terminal of the battery.

NOTICE:

- **These tests must be done quickly (within 10 seconds) to prevent the coil from burning out.**
- **Keep the fuel pump as far away from the battery as possible.**
- **Always connect or disconnect at the battery.**

If operation is not as specified, replace the fuel pump, lead wire or fuel pump bracket.

8. RECONNECT FUEL PUMP AND SENDER GAUGE CONNECTOR

9. REINSTALL SERVICE HOLE COVER

10. REINSTALL REAR SEAT CUSHION

IGNITION SYSTEM

IG0LE-01

ON-VEHICLE INSPECTION

NOTICE:

"Cold" and "Hot" in these sentences express the temperature of the coils themselves. "Cold" is from -10˚C (14˚F) to 50˚C (122˚F) and "Hot" is from 50˚C (122˚F) to 100˚C (212˚F).

1. INSPECT IGNITERS AND SPARK TEST

Check that the spark occurs.

(1) Disconnect the high-tension cord from the spark plug.

(2) Hold the end approx. 12.5 mm (0.50 in.) from the body ground.

(3) See if spark occurs while engine is being cranked.

NOTICE:

To prevent gasoline from being injected from injectors during this test, crank the engine for no more than 5 - 10 seconds at time.

If the spark does not occur, do the test as follows:

SPARK TEST

↓ NO

CHECK CONNECTION OF IGNITION COIL, IGNITIER AND DISTRIBUTOR CONNECTORS → BAD → Connect securely.

↓ OK

CHECK RESISTANCE OF HIGH-TENSION CORDS (See step 2)
Maximum resistance: 25 kΩ per cord → BAD → Replace cord(s).

↓ OK

CHECK POWER SUPPLY TO IGNITION COIL AND IGNITER
1. Turn ignition switch to ON.
2. Check that there is battery positive voltage at ignition coil positive (+) terminal. → BAD → Check wiring between ignition switch to ignition coil and igniter.

↓ OK

CHECK RESISTANCE OF IGNITION COIL (See step 4)

Resistance:	Cold	Hot
Primary	0.36 - 0.55 Ω	0.45 - 0.65 Ω
Secondary	9.0 - 15.4 kΩ	11.4 - 18.1 kΩ

→ BAD → Replace ignition coil.

↓ OK

CHECK RESISTANCE OF SIGNAL GENERATOR (PICKUP COIL) (See step 13)

Resistance:	Cold	Hot
	135 - 220 Ω	175 - 255 Ω

→ BAD → Replace distributor housing assembly.

↓ OK

CHECK RESISTANCE OF CRANKSHAFT POSITION SENSOR (See step 18)

Resistance:	Cold	Hot
	985 - 1,600 Ω	1,265 - 1,890 Ω

→ BAD → Replace crankshaft position ssensor.

↓ OK

CHECK AIR GAP OF DISTRIBUTOR (See step 11)
Air gap: 0.2 - 0.45 mm (0.008 - 0.018 in.) → BAD → Replace distributor housing assembly.

↓ OK

CHECK IGT SIGNAL FROM ECM (See page DI-125) → BAD → Check wiring between ECM, distributor and igniter, and then try another ECM.

↓ OK

TRY ANOTHER IGNITER

V08492

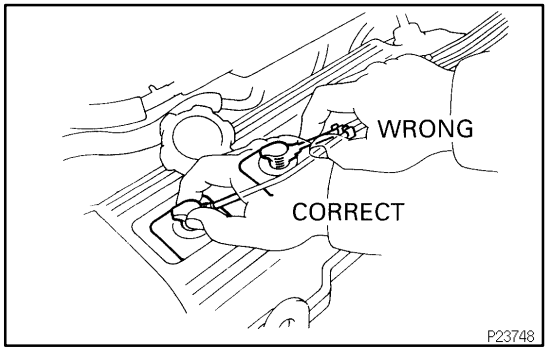

2. INSPECT HIGH-TENSION CORDS

(a) Remove the high-tension cords.
Disconnect the high-tension cords at the rubber boot. Do not pull on the high-tension cords.

NOTICE:
Pulling on or bending the cords may damage the conductor inside.

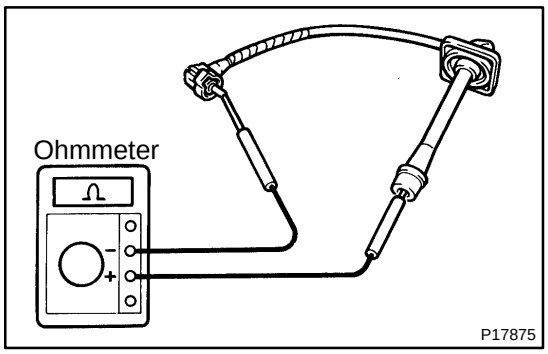

(b) Using an ohmmeter, measure the high-tension cord resistance.

Maximum resistance: 25 kΩ per cord

If the resistance is greater than maximum, check the terminals. If necessary, replace the high-tension cord.

(c) Reinstall the high-tension cords.

3. INSPECT SPARK PLUGS

NOTICE:

- **Never use a wire brush for cleaning.**
- **Never attempt to adjust the electrode gap on a used spark plug.**
- **Spark plugs should be replaced every 100,000 km (60,000 miles).**

(a) Disconnect the high-tension cords from the spark plugs.

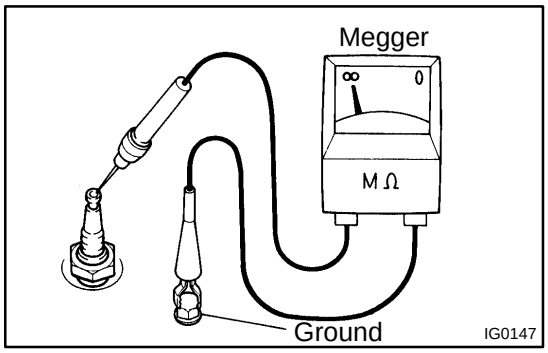

(b) Inspect the electrode.

- Using a megger (insulation resistance meter), measure the insulation resistance.

Standard correct insulation resistance:
10 MΩ or more

If the resistance is less than specified, proceed to step (d).

HINT:

If a megger is not available, the following simple method of inspection provides fairly accurate results.

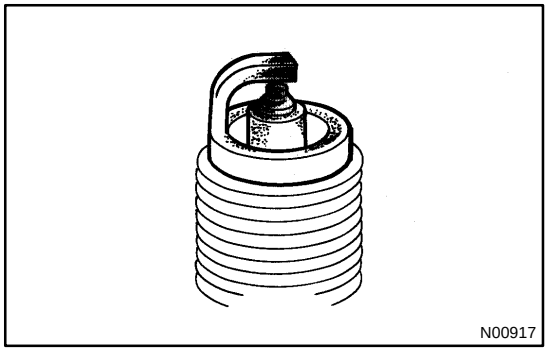

- Simple Method:
  - Quickly race the engine to 4,000 rpm 5 times.
  - Remove the spark plug.
  - Visually check the spark plug.
    If the electrode is dry ... OK
    If the electrode is wet ... Proceed to step (d)
  - Reinstall the spark plug.

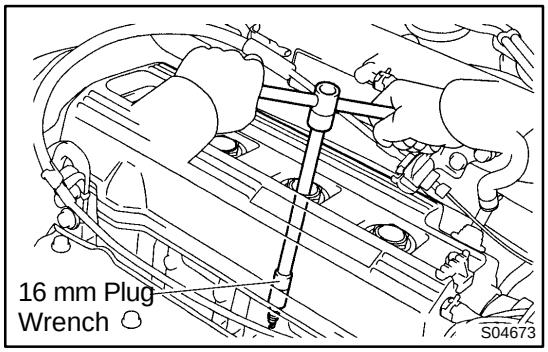

(c) Using a 16 mm plug wrench, remove the 4 spark plugs.

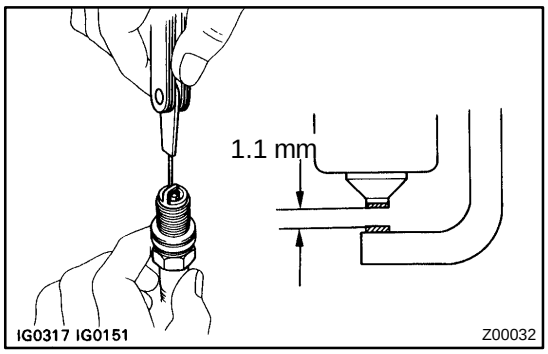

(d) Visually check the spark plug for thread damage and insulator damage.

If abnormal, replace the spark plug.

Recommended spark plug:

DENSO made	PK20R11
NGK made	BKR6EP11

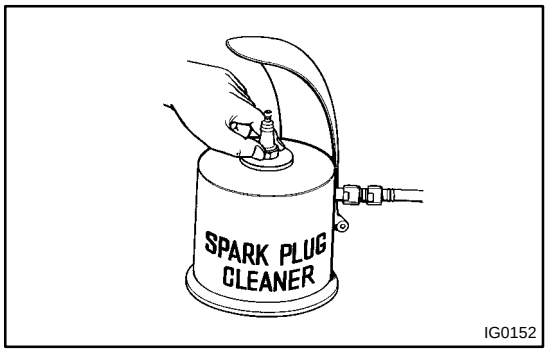

(e) Inspect the electrode gaps.

Maximum electrode gap for used spark plug:
1.3 mm (0.051 in.)

If the gap is greater than maximum, replace the spark plug.

Correct electrode gap for new spark plug:
1.1 mm (0.043 in.)

NOTICE:

If adjusting the gap of a new spark plug, bend only the base of the ground electrode. Do not touch the tip. Never attempt to adjust the gap on the used plug.

(f) Clean the spark plugs.

If the electrode has traces of wet carbon, allow it to dry and then clean with a spark plug cleaner.

Air pressure: Below 588 kPa (6 kgf/cm^2, 85 psi)
Duration: 20 seconds or less

HINT:

If there are traces of oil, remove it with gasoline before using the spark plug cleaner.

(g) Using a 16 mm plug wrench, install the 4 spark plugs.

Torque: 18 N·m (180 kgf·cm, 13 ft·lbf)

(h) Reconnect the high-tension cords from the spark plugs.

4. INSPECT IGNITION COILS AND IGNITER

5. DISCONNECT IGNITION COIL CONNECTOR AND HIGH-TENSION CORD FROM IGNITION COIL

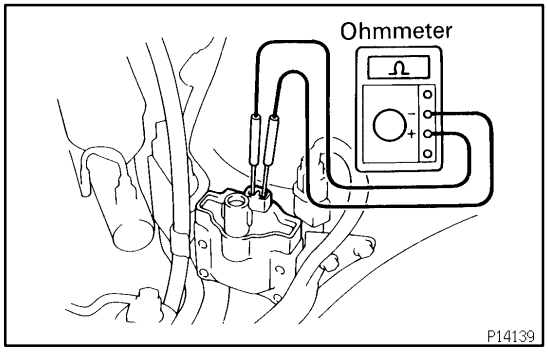

6. INSPECT PRIMARY COIL RESISTANCE

Using an ohmmeter, measure the resistance between the positive (+) and negative (-) terminals.

Primary coil resistance:

Cold	0.36 - 0.55 Ω
Hot	0.45 - 0.65 Ω

If the resistance is not as specified, replace the ignition coil.

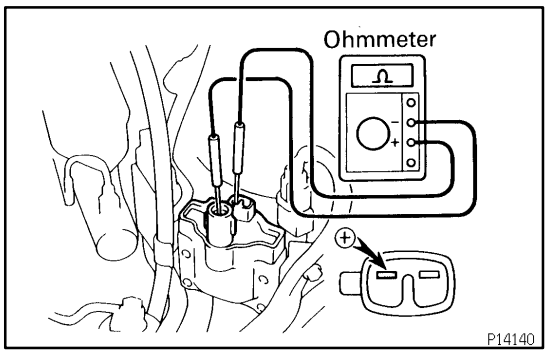

7. INSPECT SECONDARY COIL RESISTANCE

Using an ohmmeter, measure the resistance between the positive (+) and high-tension terminals.

Secondary coil resistance:

Cold	9.0 - 15.4 kΩ
Hot	11.4 - 18.1 kΩ

If the resistance is not as specified, replace the ignition coil.

8. RECONNECT HIGH-TENSION CORD AND IGNITION COIL CONNECTOR TO IGNITION COIL

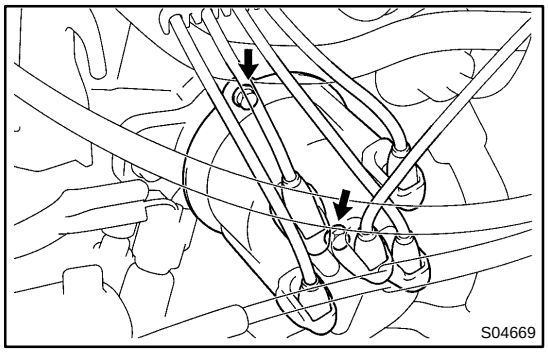

9. REMOVE DISTRIBUTOR CAP

Remove the 2 bolts, and disconnect the distributor cap from the distributor housing.

10. REMOVE ROTOR

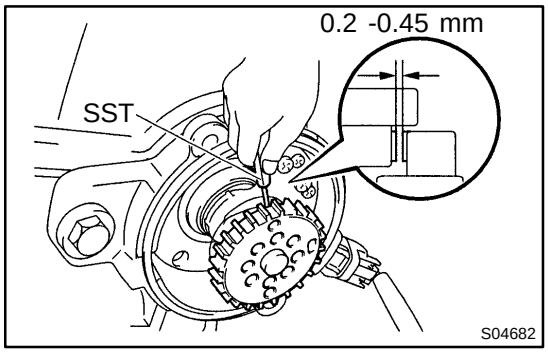

11. INSPECT AIR GAP

Using SST, measure the air gap between the signal rotor and pickup coil projection.

SST 09240-00020

Air gap: 0.2 - 0.45 mm (0.008 - 0.018 in.)

If the air gap is not as specified, replace the distributor housing assembly.

12. DISCONNECT DISTRIBUTOR CONNECTOR

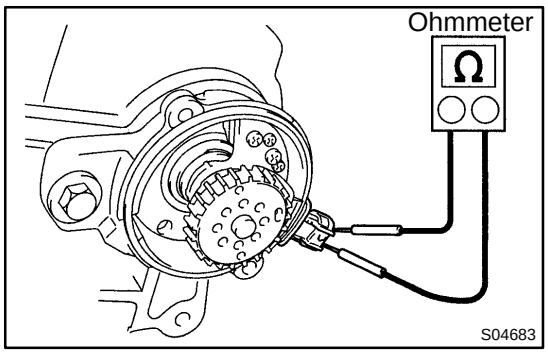

13. INSPECT SIGNAL GENERATOR (PICKUP COIL) RESISTANCE

Using an ohmmeter, measure the resistance between terminals.

Pickup coil resistance:

Cold	135 - 220 Ω
Hot	175 - 255 Ω

If the resistance is not as specified, replace the distributor housing assembly.

14. RECONNECT DISTRIBUTOR CONNECTOR

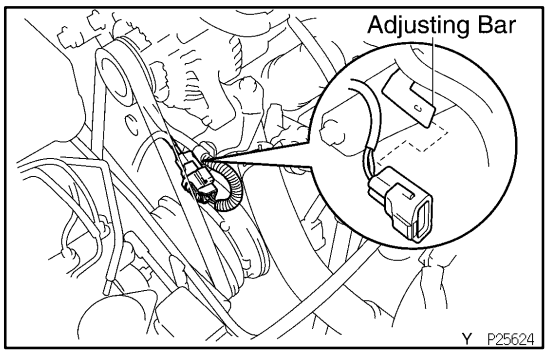

15. REINSTALL ROTOR AND DISTRIBUTOR CAP

16. INSPECT CRANKSHAFT POSITION SENSOR

17. DISCONNECT CRANKSHAFT POSITION SENSOR CONNECTOR

Disconnect the crankshaft position sensor from the generator drive belt adjusting bar.

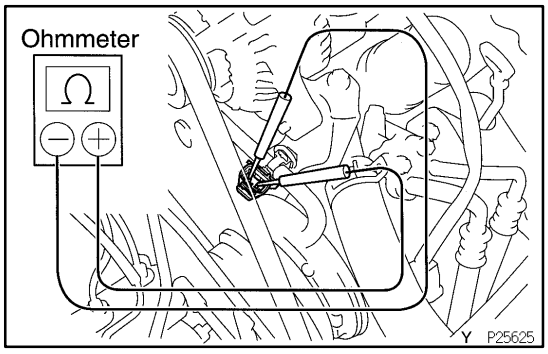

18. INSPECT CRANKSHAFT POSITION SENSOR RESISTANCE

Using an ohmmeter, measure the resistance between terminals.

Resistance:

Cold	985 - 1,600 Ω
Hot	1,265 - 1,890 Ω

If the resistance is not as specified, replace the crankshaft position sensor.

19. RECONNECT CRANKSHAFT POSITION SENSOR CONNECTOR

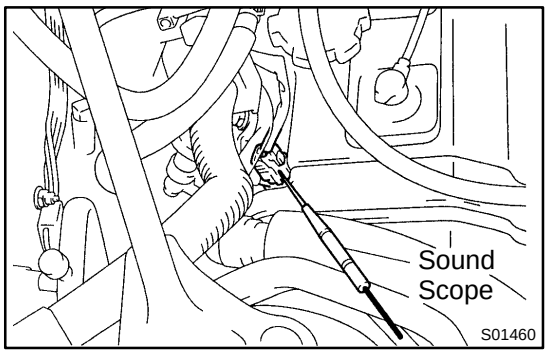

INJECTOR

SF0V4-02

ON-VEHICLE INSPECTION

1. INSPECT INJECTOR OPERATION

Check operation sound from each injector.

(1) With the engine running or cranking, use a sound scope to check that there is a normal operating noise in proportion to engine speed.

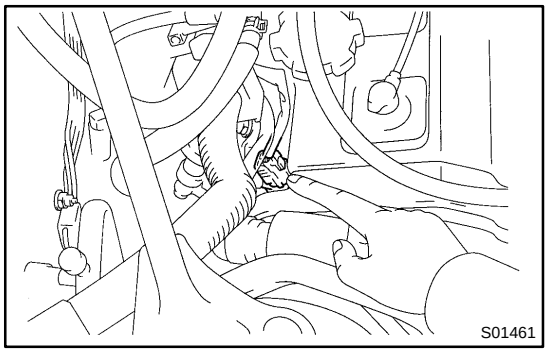

(2) If you have no sound scope, you can check the injector transmission operation with your finger.

If no sound or unusual sound is heard, check the wiring connector, injector or injection signal from the ECM.

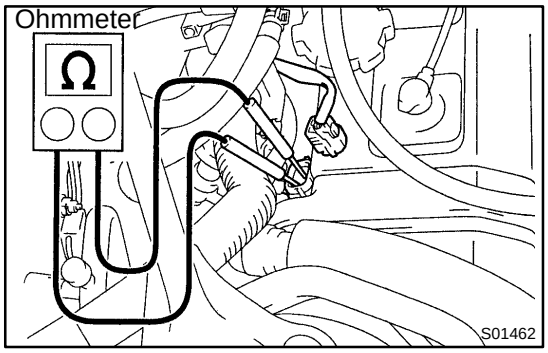

2. INSPECT INJECTOR RESISTANCE

(a) Disconnect the injector connector.

(b) Using an ohmmeter, measure the resistance between the terminals.

Resistance: 13.4 - 14.2 Ω at 20˚C (68˚F)

If the resistance is not as specified, replace the injector.

(c) Reconnect the injector connector.

CO0GI-02

ON-VEHICLE INSPECTION

1. REMOVE RADIATOR CAP

CAUTION:

To avoid the danger of being burned, do not remove the radiator cap while the engine and radiator are still hot, as fluid and steam can be blown out under pressure.

2. INSPECT RADIATOR CAP

NOTICE:

- **If the radiator cap has contaminations, always rinse it with water.**
- **Before using a radiator cap tester, wet the relief valve and pressure valve with engine coolant or water.**
- **When performing steps (a) and (b) below, keep the radiator cap tester at an angle of over 30° above the horizontal.**

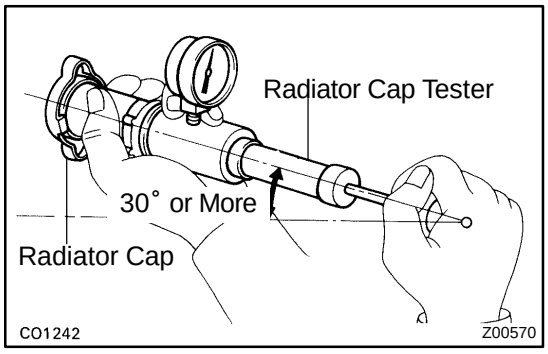

(a) Using a radiator cap tester, slowly pump the tester and check that air is coming from the vacuum valve.

Pump speed: 1 push/(3 seconds or more)

NOTICE:

Push the pump at a constant speed.

If air is not coming from the vacuum valve, replace the radiator cap.

(b) Pump the tester and measure the relief valve opening pressure.

Pump speed: 1 push within 1 second

NOTICE:

This pump speed is for the first pump only (in order to close the vacuum valve). After this, the pump speed can be reduced.

Standard opening pressure:
74 - 103 kPa
(0.75 - 1.05 kgf/cm^2, 10.7 - 14.9 psi)
Minimum opening pressure:
59 kPa (0.6 kgf/cm^2, 8.5 psi)

HINT:

Use the tester's maximum reading as the opening pressure.

If the opening pressure is less than minimum, replace the radiator cap.

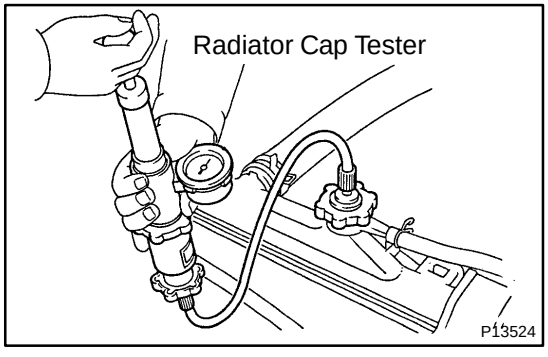

3. INSPECT COOLING SYSTEM FOR LEAKS

(a) Fill the radiator with coolant and attach a radiator cap tester.

(b) Warm up the engine.

(c) Pump it to 118 kPa (1.2 kgf/cm^2, 17.1 psi), and check that the pressure does not drop.

If the pressure drops, check the hoses, radiator or water pump for leaks. If no external leaks are found, check the heater core, cylinder block and head.

4. REINSTALL RADIATOR CAP

STARTING SYSTEM

ST07O-01

ON-VEHICLE INSPECTION

NOTICE:

Before changing the starter, check the following items again:

- **Connector connection**
- **Accessory installation, e.g.: theft deterrent system**

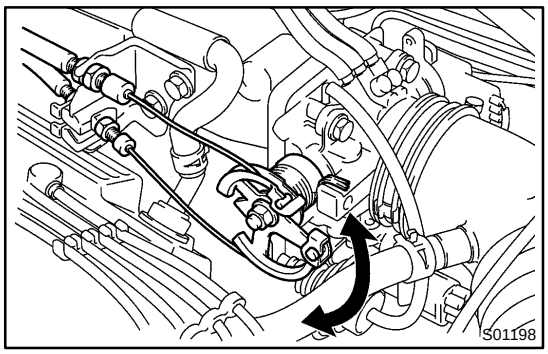

THROTTLE BODY

SF1B8-01

ON-VEHICLE INSPECTION

1. INSPECT THROTTLE BODY

(a) Check that the throttle linkage moves smoothly.

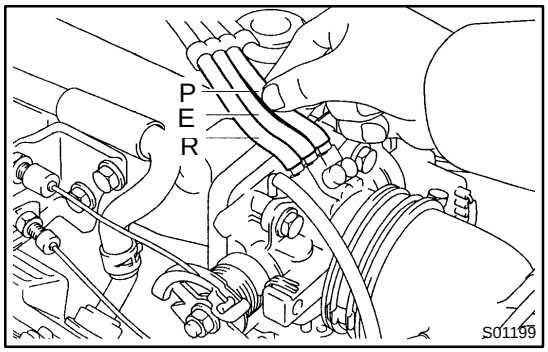

(b) Check the vacuum at each port.
- Start the engine.
- Check the vacuum with your finger.

Port name	At idle	Other than idle
P	No vacuum	Vacuum
E	No vacuum	Vacuum
R	No vacuum	No vacuum

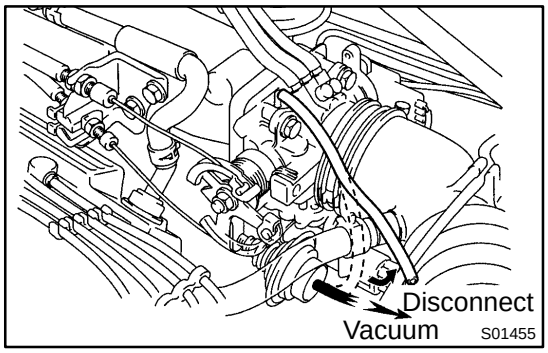

2. IINSPECT THROTTLE POSITION SENSOR

(a) Disconnect the sensor connector.

(b) Disconnect the vacuum hose from the throttle opener.

(c) Apply vacuum to the throttle opener.

(d) Using an ohmmeter, measure the resistance between each terminal.

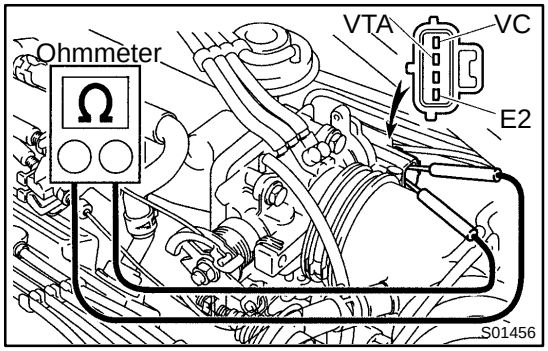

Clearance between lever and stop screw	Between terminals	Resistance
0 mm (0 in.)	VTA - E2	0.2 - 5.7 kΩ
Throttle valve fully open	VTA - E2	2.0 - 10.2 kΩ
-	VC - E2	2.5 - 5.9 kΩ

(e) Reconnect the vacuum hose to the throttle opener.

(f) Reconnect the sensor connector.

3. INSPECT THROTTLE OPENER

(a) Warm up engine.
Allow the engine to warm up to normal operating temperature.

(b) Connect TOYOTA HAND- HELD TESTER or OBDII SCAN TOOL.

(c) Check idle speed.
Idle speed: 750 ± 50 rpm

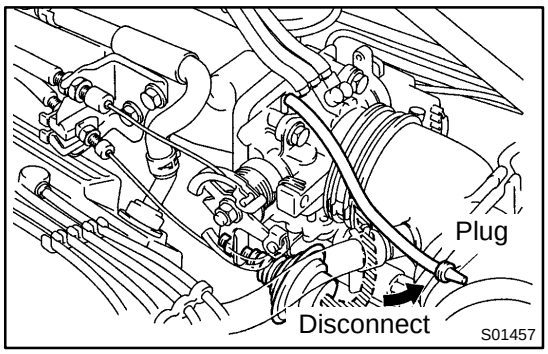

(d) Check and adjust throttle opener setting speed.
(1) Disconnect the vacuum hose from the throttle opener, and plug the hose end.
(2) Maintain the engine speed at 2,500 rpm.
(3) Release the throttle valve.
(4) Check that the throttle opener is set.

Throttle opener setting speed:
1,300 - 1,500 rpm (w/ Cooling fan OFF)

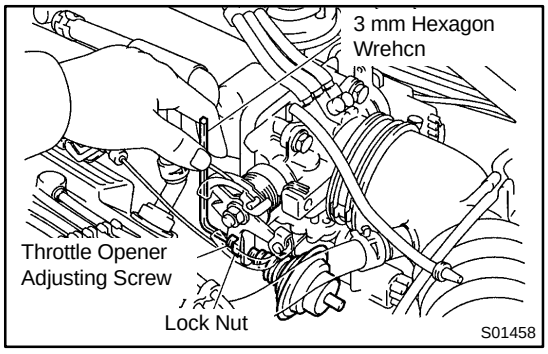

(5) Using a 3 mm hexagon wrench, loosen the lock nut and adjust the throttle opener setting speed by turning the throttle opener adjusting screw. Tighten the lock nut.
(6) Reconnect the vacuum hose to the throttle opener.

(e) Disconnect TOYOTA HAND-HELD TESTER or OBDII SCAN TOOL.

CH0E3-02

ON-VEHICLE INSPECTION

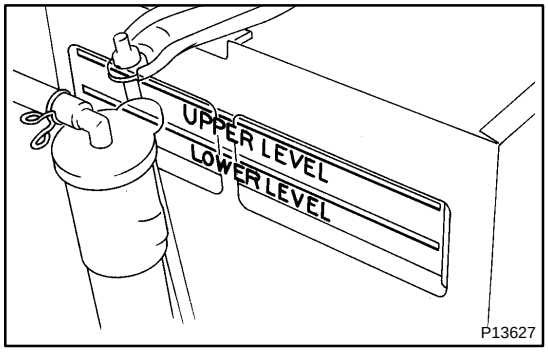

1. CHECK BATTERY ELECTROLYTE LEVEL

Check the electrolyte quantity of each cell.

Maintenance-Free Battery:

If under the lower level, replace the battery (or add distilled water if possible). Check the charging system.

Except Maintenance-Free Battery:

If under the lower level, add distilled water.

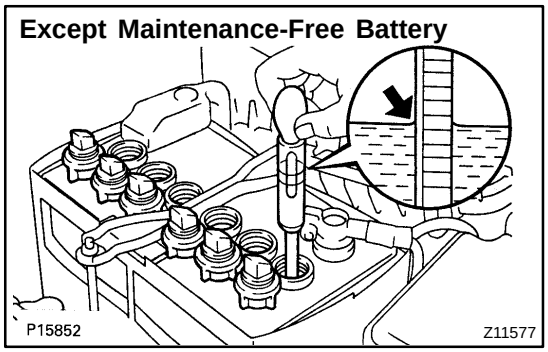

2. Except Maintenance-Free Battery: CHECK BATTERY SPECIFIC GRAVITY

Check the specific gravity of each cell.

Standard specific gravity:

At 20˚C (68˚F): 1.25 - 1.27

If the specific gravity is less than specification, charge the battery.

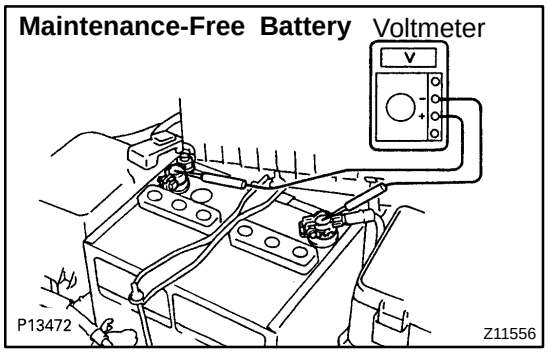

3. Maintenance-Free Battery: CHECK BATTERY VOLTAGE

Measure the battery voltage between the negative (-) and positive (+) terminals of the battery.

Standard voltage:

At 20˚C (68˚F): 12.7 - 12.9 V

HINT:

- Before measuring the voltage, turn the ignition switch OFF and turn off the electrical systems (headlight, blower motor, rear defogger etc.) for 60 seconds to remove the surface charge.

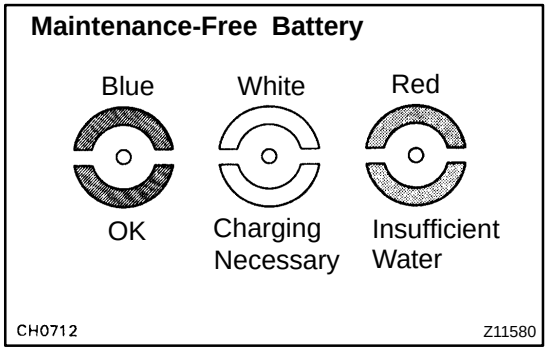

- If the vehicle has been running, wait 5 minutes or more after the vehicle stops before measuring the battery voltage.

If the voltage is less than specification, charge the battery.

HINT:

Check the indicator as shown in the illustration.

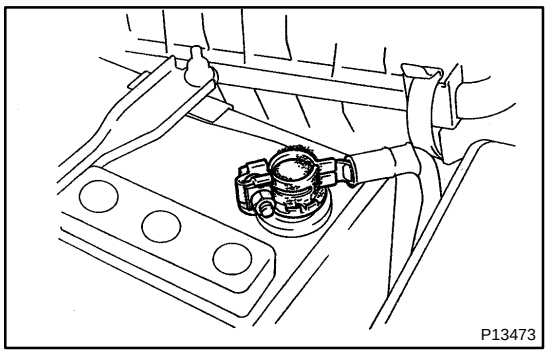

4. CHECK BATTERY TERMINALS, FUSIBLE LINK AND FUSES

(a) Check that the battery terminals are not loose or corroded.

If the terminals are corroded, clean the terminals.

(b) Check the fusible link, H-fuses, M-Fuse and fuses for continuity.

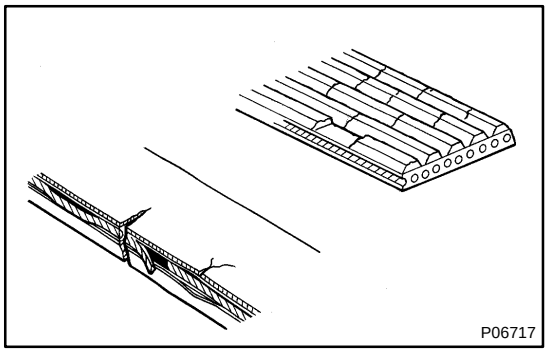

5. INSPECT DRIVE BELT

(a) Visually check the belt for excessive wear, frayed cords etc.

If any defect has been found, replace the drive belt.

HINT:

Cracks on the rib side of a belt are considered acceptable. If the belt has chunks missing from the ribs, it should be replaced.

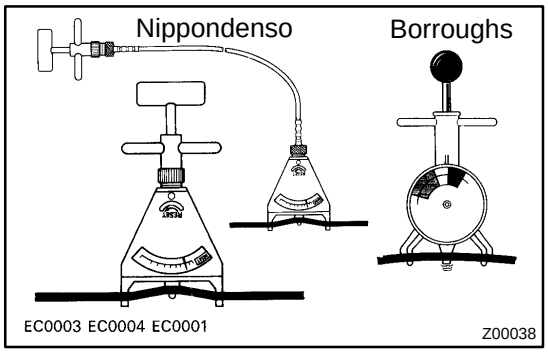

(b) Using a belt tension gauge, measure the belt tension.

Belt tension gauge:
Nippondenso BTG-20 (95506-00020)
Borroughs No. BT-33-73F
Drive belt tension:
New belt
175 ± 5 lbf
Used belt
115 ± 20 lbf

If the belt tension is not as specified, adjust it.

HINT:

- "New belt" refers to a belt which has been used less than 5 minutes on a running engine.
- "Used belt" refers to a belt which has been used on a running engine for 5 minutes or more.
- After installing a belt, check that it fits properly in the ribbed grooves.
- Check with your hand to confirm that the belt has not slipped out of the groove on the bottom of the pulley.

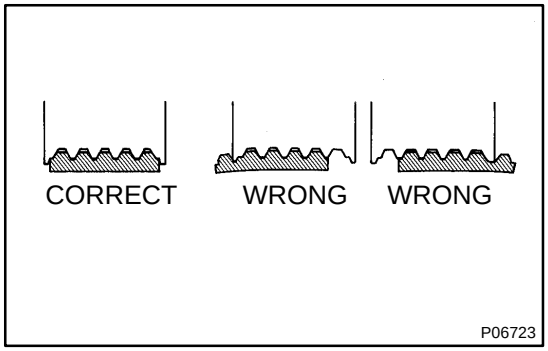

- After installing a new belt, run the engine for about 5 minutes and recheck the belt tension.

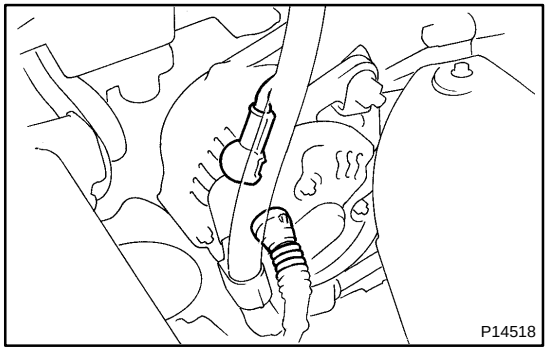

6. VISUALLY CHECK GENERATOR WIRING AND LISTEN FOR ABNORMAL NOISES

(a) Check that the wiring is in good condition.

(b) Check that there is no abnormal noise from the generator while the engine is running.

7. CHECK CHARGE WARNING LIGHT CIRCUIT

(a) Warm up the engine and then turn it off.
(b) Turn off all accessories.
(c) Turn the ignition switch "ON". Check that the charge warning light is lit.
(d) Start the engine. Check that the light goes off.

If the light does not go off as specified, troubleshoot the charge light circuit.

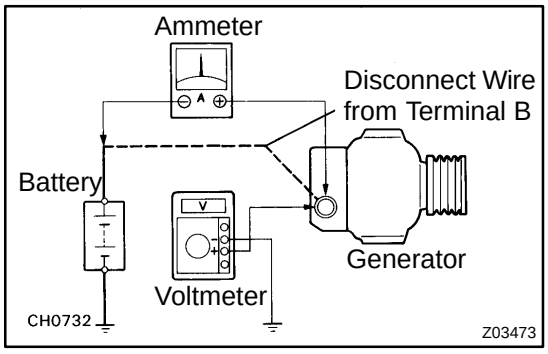

8. INSPECT CHARGING CIRCUIT WITHOUT LOAD

HINT:

If a battery/generator tester is available, connect the tester to the charging circuit as per manufacturer's instructions.

(a) If a tester is not available, connect a voltmeter and ammeter to the charging circuit as follows:
- Disconnect the wire from terminal B of the generator and connect it to the negative (-) tester probe of the ammeter.
- Connect the positive (+) tester probe of the ammeter to terminal B of the generator.
- Connect the positive (+) tester probe of the voltmeter to terminal B of the generator.
- Ground the negative (-) tester probe of the voltmeter.

(b) Check the charging circuit as follows:
With the engine running from idling to 2,000 rpm, check the reading on the ammeter and voltmeter.
Standard amperage:
10 A or less
Standard voltage:
At 25˚C (77˚F): 14.0 - 15.0 V
At 115˚C (239˚F): 13.5 - 14.3 V

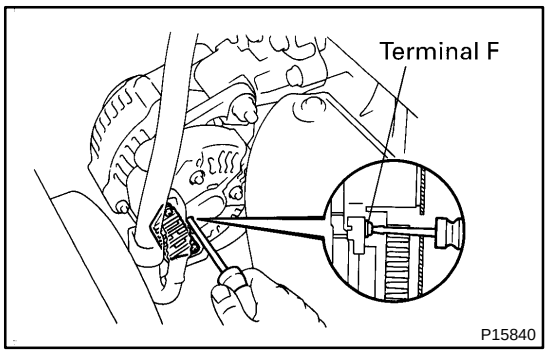

If the voltmeter reading is more than standard voltage, replace the voltage regulator.

If the voltmeter reading is less than standard voltage, check the voltage regulator and generator as follows:
- With terminal F grounded, start the engine and check the voltmeter reading of terminal B.
- If the voltmeter reading is more than standard voltage, replace the voltage regulator.
- If the voltmeter reading is less than standard voltage, check the generator.

9. INSPECT CHARGING CIRCUIT WITH LOAD

(a) With the engine running at 2,000 rpm, turn on the high beam headlights and place the heater blower switch at "HI".

(b) Check the reading on the ammeter.

Standard amperage:

30 A or more

If the ammeter reading is less than standard amperage, repair the generator.

HINT:

If the battery is fully charged, the indication will sometimes be less than standard amperage.

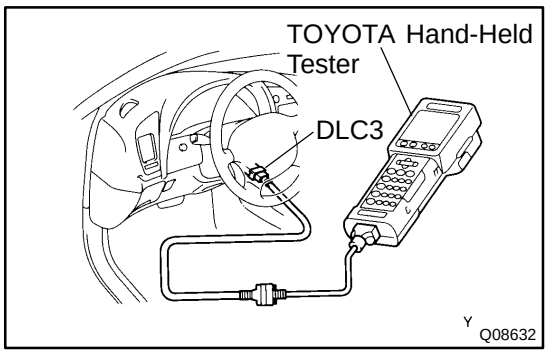

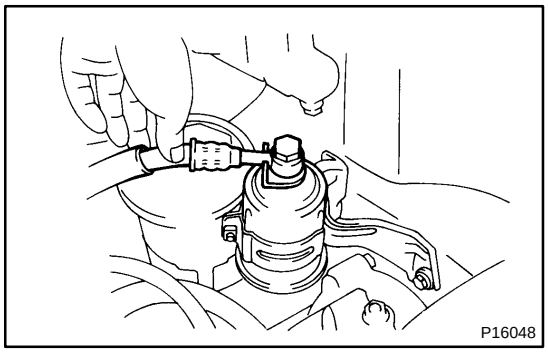

FUEL PUMP

SF0W6-04

ON-VEHICLE INSPECTION

1. CHECK FUEL PUMP OPERATION

(a) Connect the TOYOTA hand-held tester to the DLC3.

(b) Turn the ignition switch ON and TOYOTA hand-held tester main switch ON.

NOTICE:

Do not start the engine.

(c) Select the active test mode on the TOYOTA hand-held tester.

(d) Please refer to the TOYOTA hand-held tester operator's manual for further details.

(e) If you have no TOYOTA hand-held tester, connect the positive (+) and negative (-) leads from the battery to the fuel pump connector.

(f) Check that there is pressure in the fuel inlet hose from the fuel filter.

HINT:

If there is fuel pressure, you will hear the sound of fuel flowing.

If there is no pressure, check these parts:

- Fusible link
- H-fuse (MAIN 60A)
- Fuses (EFI 15A, AM2 30A, IGN 7.5A)
- EFI main relay
- Circuit opening relay
- Fuel pump
- Wiring connections

(g) Turn the ignition switch OFF.

(h) Disconnect the TOYOTA hand- held tester from the DLC3.

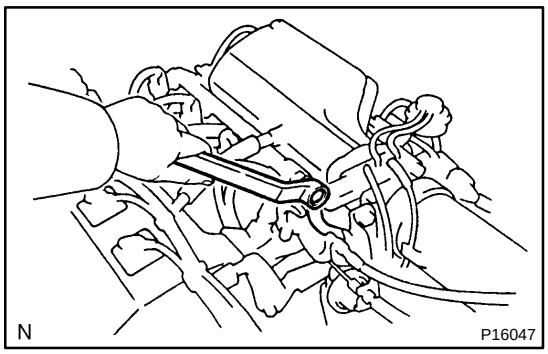

2. CHECK FUEL PRESSURE

(a) Check the battery positive voltage is above 12 V.

(b) Disconnect the negative (-) terminal cable from the battery.

(c) Remove the union bolt and 2 gaskets, and disconnect the fuel inlet hose from the fuel filter outlet.

CAUTION:

- **Put a shop towel under the fuel filter.**
- **Slowly loosen the union bolt.**

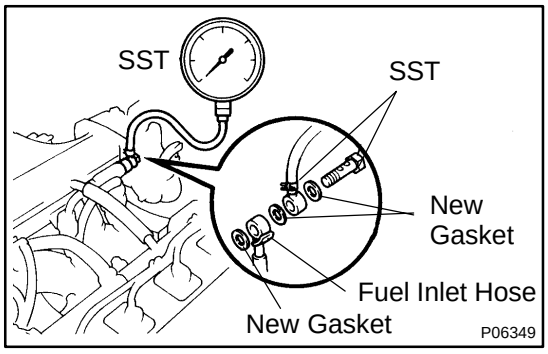

(d) Install the fuel inlet hose and SST (pressure gauge) to the fuel filter outlet with the 3 gaskets and SST (union bolt).
SST 09268-45012 (09268-41190, 90405-06167)
Torque: 29 N·m (300 kgf·cm, 22 ft·lbf)

(e) Wipe off any splattered gasoline.

(f) Connect the TOYOTA hand-held tester to the DLC3 (See step 1 in check fuel pump operation (a) to (f)).

(g) Reconnect the negative (-) terminal cable to the battery.

(h) Turn the ignition switch ON.

(i) Measure the fuel pressure.
Fuel pressure:
265 - 304 kPa (2.7 - 3.1 kgf/cm^2, 38 - 44 psi)

If pressure is high, replace the fuel pressure regulator.

If pressure is low, check these parts:

- Fuel hoses and connections
- Fuel pump
- Fuel filter
- Fuel pressure regulator
- Injectors

(j) Disconnect the TOYOTA hand-held tester from the DLC3.

(k) Reinstall the fuse cover on the instrument panel.

(l) Start the engine.

(m) Disconnect the vacuum sensing hose from the fuel pressure regulator, and plug the hose end.

(n) Measure the fuel pressure at idle.
Fuel pressure:
265 - 304 kPa (2.7 - 3.1 kgf/cm^2, 38 - 44 psi)

(o) Reconnect the vacuum sensing hose to the fuel pressure regulator.

(p) Measure the fuel pressure at idle.
Fuel pressure:
206 - 255 kPa (2.1 - 2.6 kgf/cm^2, 31 - 37 psi)

(q) Stop the engine.

(r) Check that the fuel pressure remains as specified for 5 minutes after the engine has stopped.
Fuel pressure:
147 kPa (1.5 kgf/cm^2, 21 psi) or more

If pressure is not as specified, check the fuel pump, pressure regulator and/or injectors.

(s) After checking fuel pressure, disconnect the negative (-) terminal cable from the battery and carefully remove the SST to prevent gasoline from splashing.
SST 09268-45012

(t) Reconnect the fuel inlet hose with 2 new gaskets and the union bolt.
Torque: 29 N·m (300 kgf·cm, 21 ft·lbf)

(u) Reconnect the negative (-) terminal cable to the battery.

(v) Check for fuel leakage.

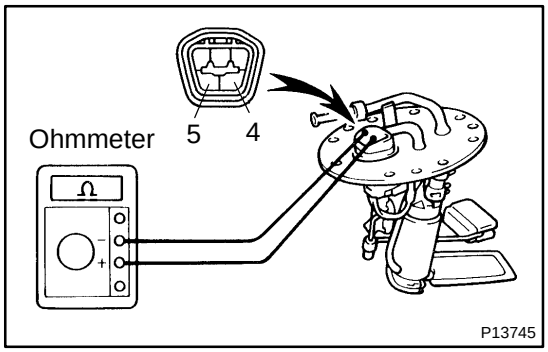

3. INSPECT FUEL PUMP RESISTANCE

Using an ohmmeter, measure the resistance between terminals 4 and 5.

Resistance:
0.2 - 3.0 Ω at 20 ˚C (68 ˚F)

If the resistance is not as specified, replace the fuel pump, lead wire or fuel pump bracket.

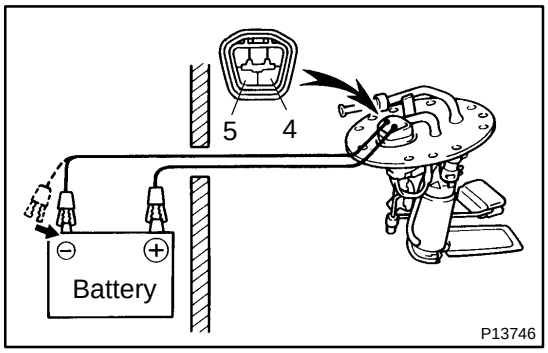

4. INSPECT FUEL PUMP OPERATION

Connect a tester lead from terminal 4 of the connector to the positive (+) terminal of the battery, connect another tester lead from terminal 5 of the connector to the negative (-) terminal of the battery.

NOTICE:

- **These tests must be done quickly (within 10 seconds) to prevent the coil from burning out.**
- **Keep the fuel pump as far away from the battery as possible.**
- **Always connect or disconnect at the battery.**

If operation si not as specified, replace the fuel pump lead wire or fuel pump bracket.

IGNITION SYSTEM

IG0LH-01

ON-VEHICLE INSPECTION

1. CHECK SPARK TEST

(a) Disconnect the high-tension cords from the spark plugs.
(b) Remove the spark plugs.
(c) Install the spark plug to the each high-tension cord.
(d) Ground the spark plug.
(e) Check if spark occurs while engine is being cranked.

NOTICE:

To prevent excess fuel being injected from the injectors during this test, do not crank the engine for more 5 - 10 seconds at a time.

If the spark does not occur, do the test as follows:

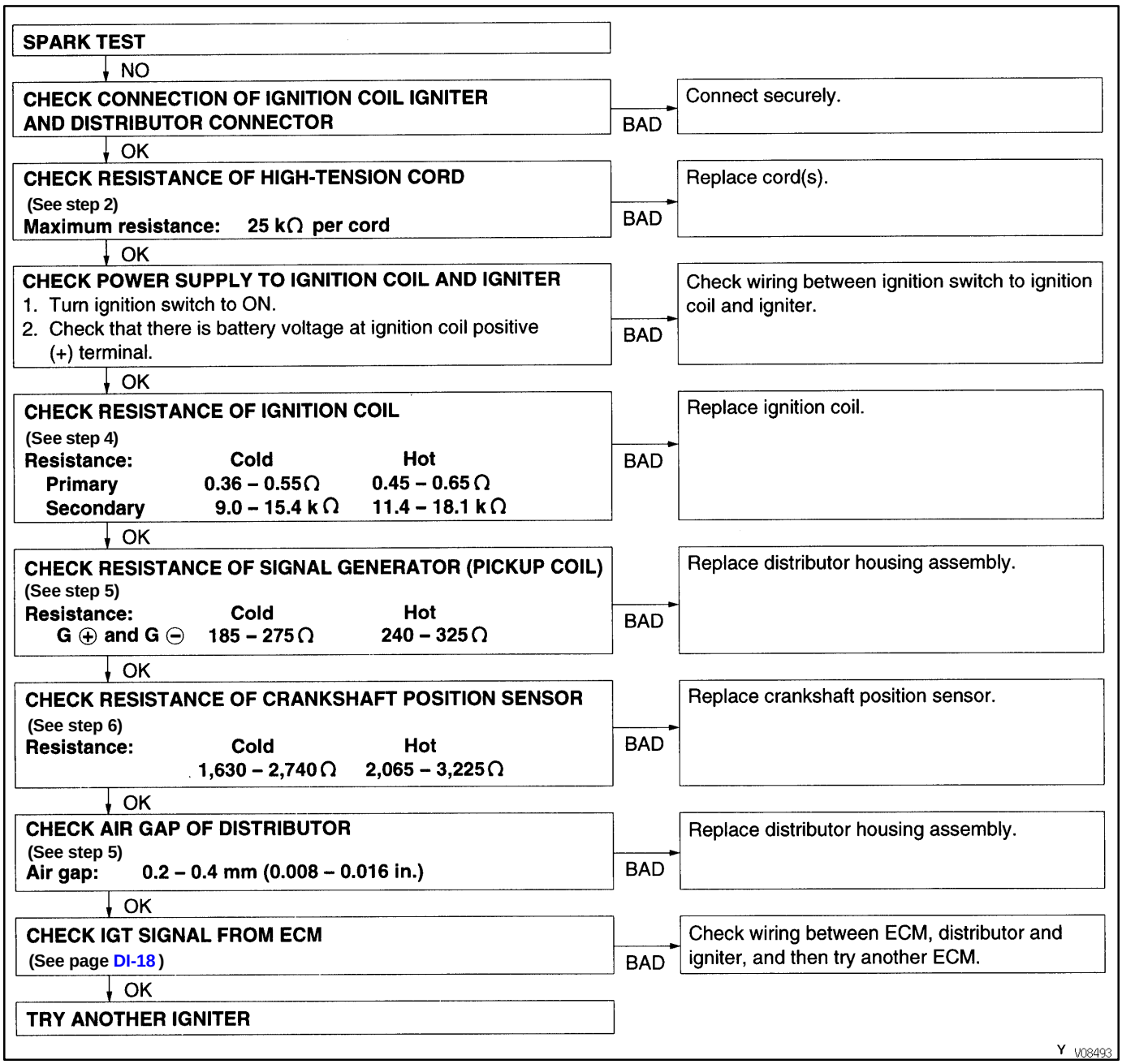

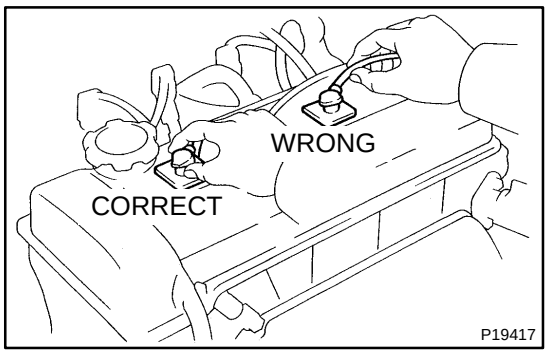

2. INSPECT HIGH-TENSION CORD

(a) Remove the high-tension cords.
Disconnect the high-tension cords at the rubber boot. Do not pull on the cords.

NOTICE:
Pulling on or bending the cords may damage the conductor inside.

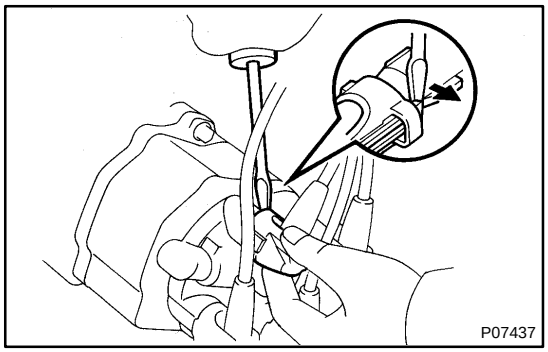

(b) Using a screwdiver, lift up the lock claw and disconnect the holder from the distributor cap.

(c) Disconnect the high-tension cord at the grommet.
Do not pull on the cords.

NOTICE:
Pulling on or bending the cords may damage the conductor inside.

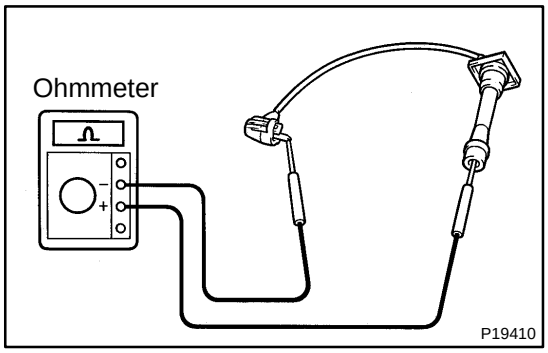

(d) Inspect the high-tension cord resistance.
Using an ohmmeter, measure the resistance.
Maximum resistance:
25 kΩ per cord

If the resistance is greater than maximum, check the terminals. If necessary, replace the high-tension cord.

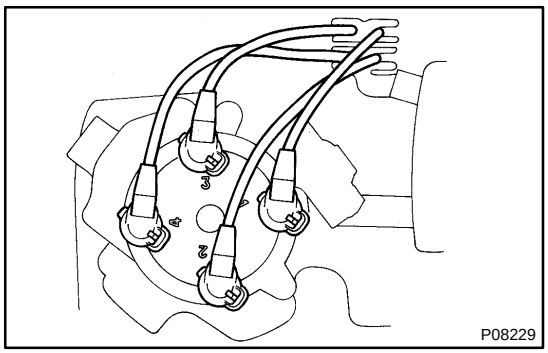

(e) Connect the holder and grommet portion to the distributor cap as shown the illustration.

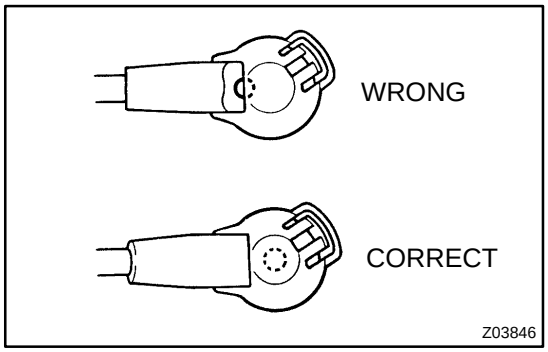

NOTICE:
Check that the holder is correctly installed to the grommet and distributor cap as shown in the illustration.

(f) Check that the lock claw of the holder is engaged by lightly pullng the holder.

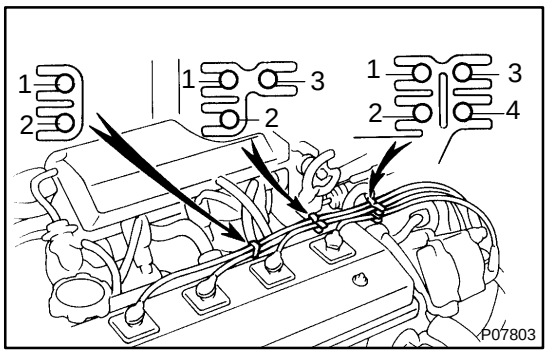

(g) Secure the high-tension cords with the clamps as shown in the illustration.

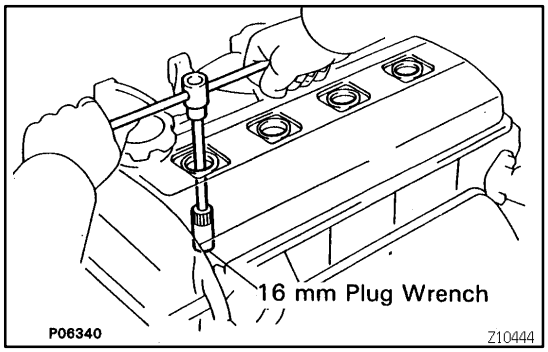

3. INSPECT SPARK PLUGS

(a) Disconnect the high-tension cords from the spark plugs.

(b) Remove the spark plugs.
Using a 16 mm plug wrench, remove the 4 spark plugs.

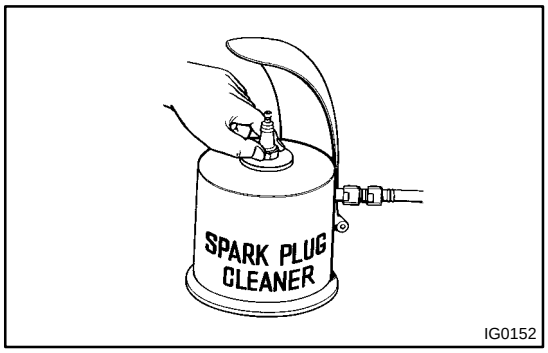

(c) Clean the spark plugs.
Using a spark plug cleaner or wire brush, clean the spark plug.

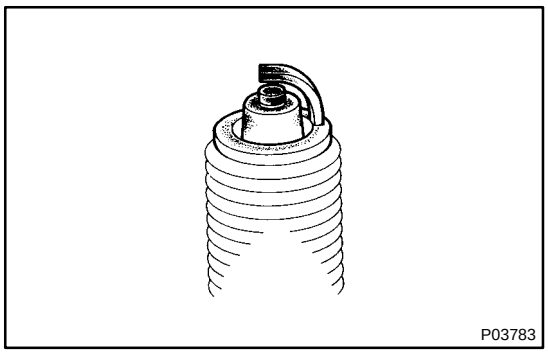

(d) Visually inspect the spark plugs.
Check the spark plug for electrode wear, thread damage and insulator damage.

If abnormal, replace the spark plug.

Recommended spark plug:

ND	K16R-U
NGK	BKR5EYA

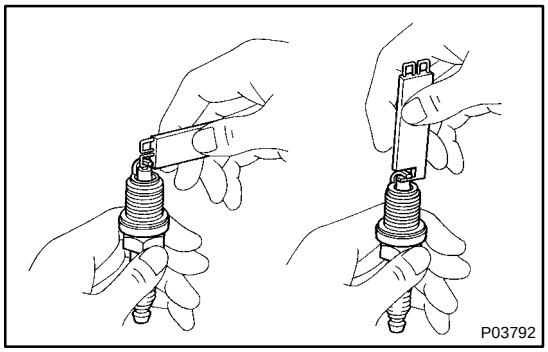

(e) Adjust the electrode gap.
Carefully bend the outer electrode to obtain the correct electrode gap.
Correct electrode gap:
0.8 mm (0.031 in.)

(f) Install the spark plugs.
Using a 16 mm plug wrench, install the 4 spark plugs.
Torque: 18 N·m (180 kgf·cm, 13 ft·lbf)

(g) Reconnect the high-tension cords to the spark plugs.

4. INSPECT IGNITION COIL

NOTICE:

"Cold" and "Hot" in the following sentences express the temperature of the coils themselves. "Cold" is from -10˚C (14˚F) to 50˚C (122˚F) and "Hot" is from 50˚C (122˚F) to 100˚C (212˚F).

(a) Disconnect the distributor connector.

(b) Remove the distributor cap and rotor.

(c) Remove the ignition coil dust cover.

(d) Inspect the primary coil resistance.

Using an ohmmeter, measure the resistance between the positive (+) and negative (-) terminals.

Primary coil resistance:

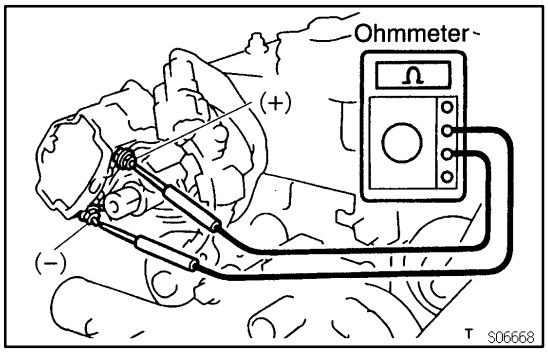

Cold	0.36 - 0.55 Ω
Hot	0.45 - 0.65 Ω

If the resistance is not as specified, replace the ignition coil.

(e) Inspect the secondary coil resistance.

Using an ohmmeter, measure the resistance between the positive (+) and high-tension terminals.

Secondary coil resistance:

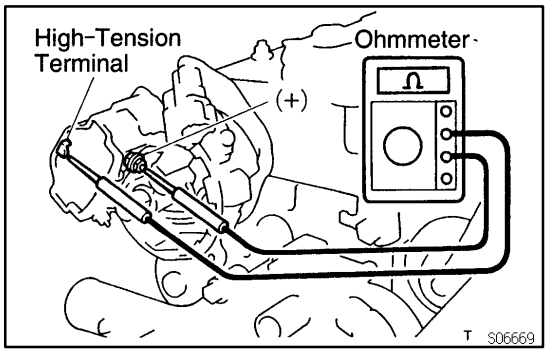

Cold	9.0 - 15.4 kΩ
Hot	11.4 - 18.1 kΩ

If the resistance is not as specified, replace the ignition coil.

(f) Reinstall the ignition coil dust cover.

(g) Reinstall the distributor cap and rotor.

(h) Reconnect the distributor connector.

5. INSPECT DISTRIBUTOR

NOTICE:

"Cold" and "Hot" in the following sentences express the temperature of the coils themselves. "Cold" is from -10˚C (14˚F) to 50˚C (122˚F) and "Hot" is from 50˚C (122˚F) to 100˚C (212˚F).

(a) Disconnect the distributor connector.

(b) Remove the distributor cap and rotor.

(c) Remove the ignition coil dust cover.

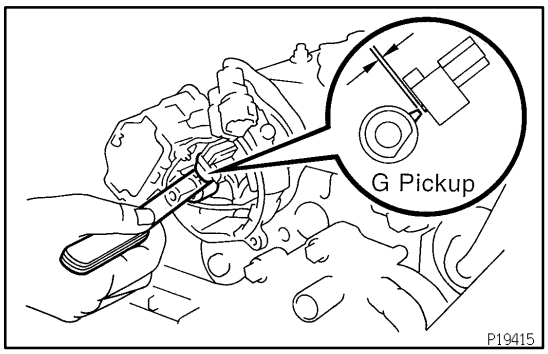

(d) Inspect the air gap.
Using a feeler gauge, measure the air gap between the signal rotor and pickup coil projection.
Air gap:
0.2 - 0.4 mm (0.008 - 0.016 in.)

If the air gap is not as specified, replace the distributor housing assembly.

(e) Inspect the signal generator (pickup coil) resistance.
Using an ohmmeter, measure the resistance between terminals G⊕ and G⊖.
Pickup coil resistance:

Cold	185 - 275 Ω
Hot	240 - 325 Ω

If the resistance is not as specified, replace the distributor housing assembly.

(f) Reinstall the ignition coil dust cover.

(g) Reinstall the distributor cap and rotor.

(h) Reconnect the distributor connector.

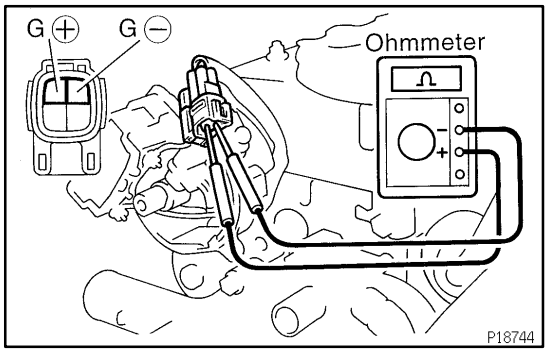

6. INSPECT CRANKSHAFT POSITION SENSOR

NOTICE:

"Cold" and "Hot" in the following sentences express the temperature of the sensor itself. "Cold" is from -10˚C (14˚F) to 50˚C (122˚F) and "Hot" is from 50˚C (122˚F) to 100˚C (212˚F).

(a) Disconnect the crankshaft position sensor connector.

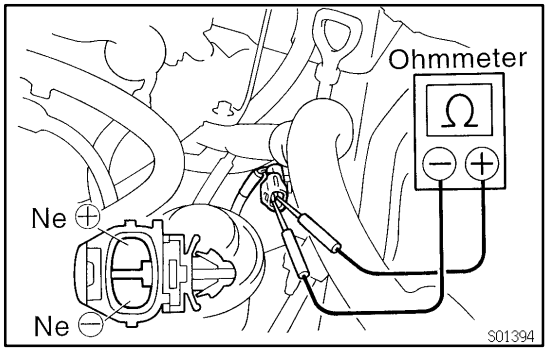

(b) Inspect the crankshaft position sensor resistance.
Using an ohmmeter, measure the resistance between the terminals.
Resistance:

Cold	1,630 - 2,740 Ω
Hot	2,065 - 3,225 Ω

If the resistance is not as specified, replace the crankshaft position sensor.

(c) Reconnect the crankshaft position sensor connector.

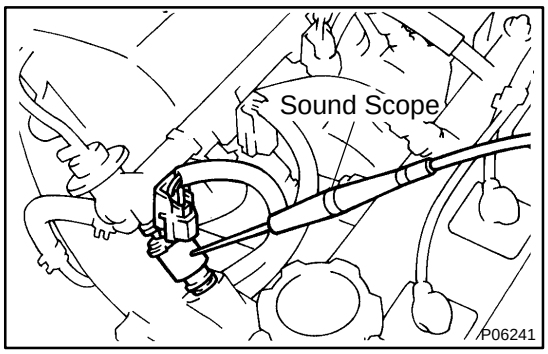

INJECTOR

SF1BX-01

ON-VEHICLE INSPECTION

1. INSPECT INJECTOR OPERATION

Check operation sound from each injector.

(1) With the engine running or cranking, use a sound scope to check that there is a normal operating noise in proportion to engine speed.

(2) If you have no sound scope, you can check the injector transmission operation with your finger.

If no sound or unusual sound is heard, check the wiring connector, injector or injection signal from the ECM.

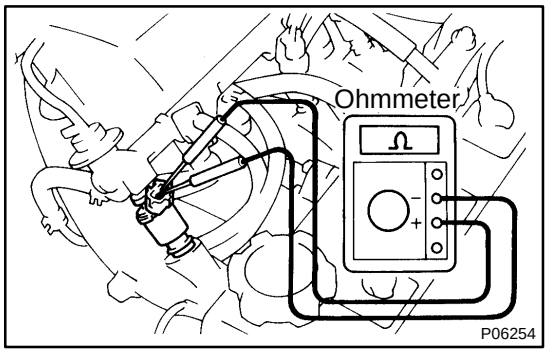

2. INSPECT INJECTOR RESISTANCE

(a) Disconnect the injector connector.

(b) Using an ohmmeter, measure the resistance between the terminals.

Resistance: 13.4 - 14.2 Ω at 20˚C (68˚F)

If the resistance is not as specified, replace the injector.

(c) Reconnect the injector connector.

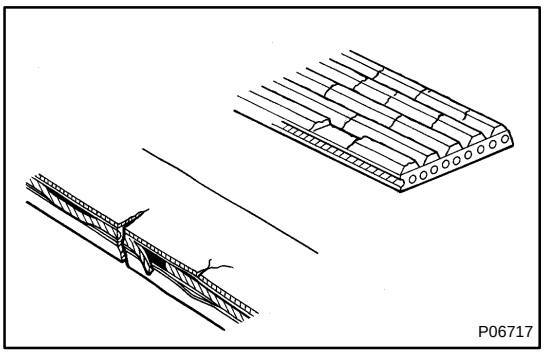
P06717

DRIVE BELT

INSPECTION

SR01U-07

INSPECT DRIVE BELT

(a) Visually check the belt for excessive wear, frayed cords etc.

If any defect has been found, replace the drive belt.

HINT:

Cracks on the rib side of a belt are considered acceptable. If the belt has chunks missing from the ribs, it should be replaced.

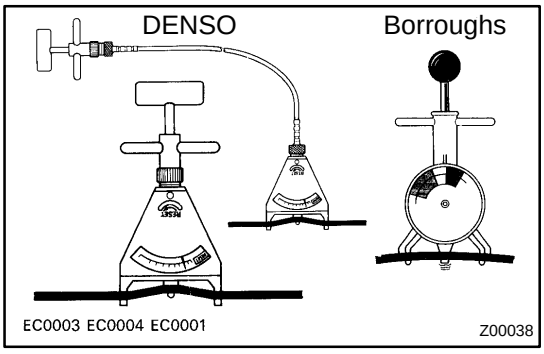

(b) Using a belt tension gauge, measure the belt tension.
Belt tension gauge:
DENSO BTG-20 (95506-00020)
Borroughs No. BT-33-73F
Drive belt tension:
New belt: 99 - 121 lbf
Used belt: 44 - 77 lbf

If the belt tension is not as specified, adjust it.

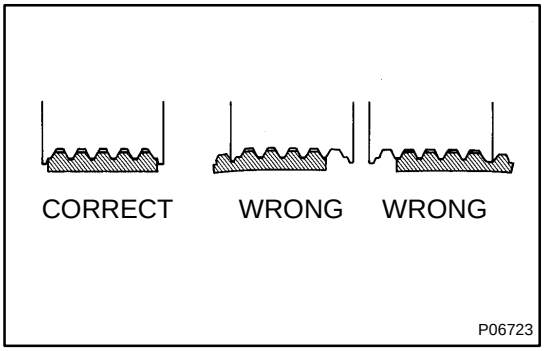

HINT:

- "New belt" refers to a belt which has been used less than 5 minutes on a running engine.
- "Used belt" refers to a belt which has been used on a running engine for 5 minutes or more.
- After installing a belt, check that it fits properly in the ribbed grooves.
- Check with your hand to confirm that the belt has not slipped out of the groove on the bottom of the pulley.
- After installing a new belt, run the engine for about 5 minutes and recheck the belt tension.

STARTING SYSTEM

ST0K3-02

ON-VEHICLE INSPECTION

NOTICE:

Before changing the starter, check the following items again:. Connector connection. Accessory installation, e.g.: theft deterrent system

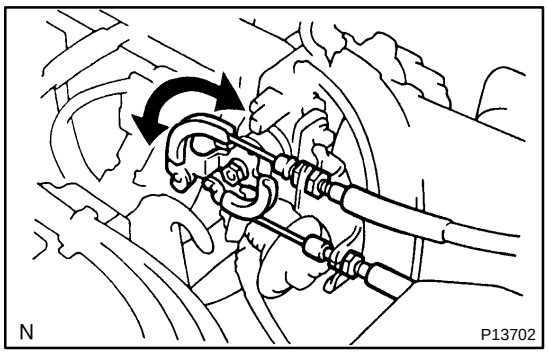

THROTTLE BODY

SF1C1-02

ON-VEHICLE INSPECTION

1. INSPECT THROTTLE BODY

(a) Check that the throttle linkage moves smoothly.

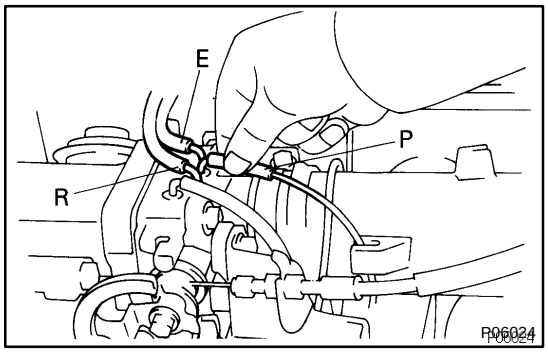

(b) Check the vacuum at each port.
- Start the engine.
- Check the vacuum with your finger.

Port name	At idle	Other than idle
P	No vacuum	Vacuum
E	No vacuum	Vacuum
R	No vacuum	Vacuum

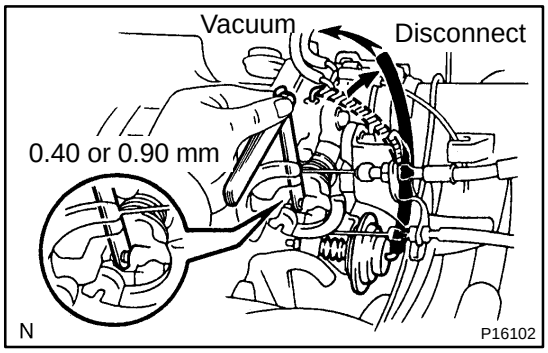

2. IINSPECT THROTTLE POSITION SENSOR

(a) Disconnect the sensor connector.

(b) Disconnect the vacuum hose from the throttle opener.

(c) Apply vacuum to the throttle opener.

(d) Insert a feeler gauge between the throttle stop screw and stop lever.

(e) Using an ohmmeter, measure the resistance between each terminal.

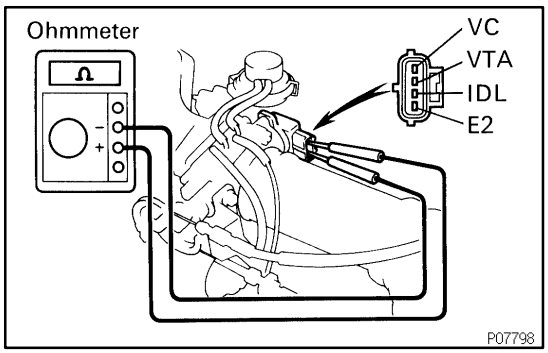

Clearance between lever and stop screw	Between terminals	Resistance
0 mm (0 in.)	VTA - E2	0.2 - 5.7 kΩ
0.40 mm (0.016 in.)	IDL-E2	2.3 kΩ or less
0.90 mm (0.035 in.)	IDL-E2	Infinity
Throttle valve fully open	VTA - E2	2.0 - 10.2 kΩ
-	VC - E2	2.5 - 5.9 kΩ

(f) Reconnect the vacuum hose to the throttle opener.

(g) Reconnect the sensor connector.

3. INSPECT THROTTLE OPENER

(a) Warm up engine
Allow the engine to warm up to normal operating temperature.

(b) Check idle speed
Idle Speed: 650 - 750 rpm

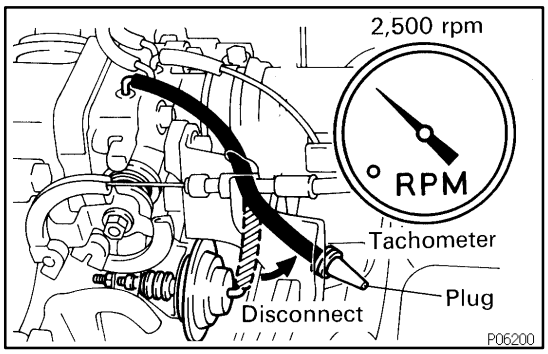

(c) Check and adjust throttle opener setting speed
(1) Disconnect the vacuum hose from the throttle opener and plug the hose end.
(2) Maintain the engine at 2,500 rpm.
(3) Release the throttle valve.
(4) Check that the throttle opener is set.

Throttle opener setting speed:
1,300 - 1,500 rpm (w/ cooling fan OFF)

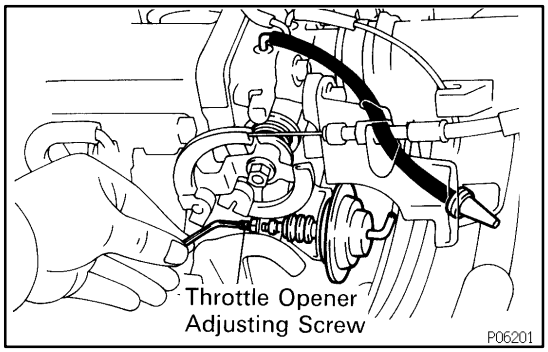

(5) Adjust the throttle opener setting speed by turning the throttle opener adjusting screw.
(6) Reconnect the vacuum hose to the throttle opener.

(d) Disconnect TOYOTA hand-held tester or OBD II scan tool.

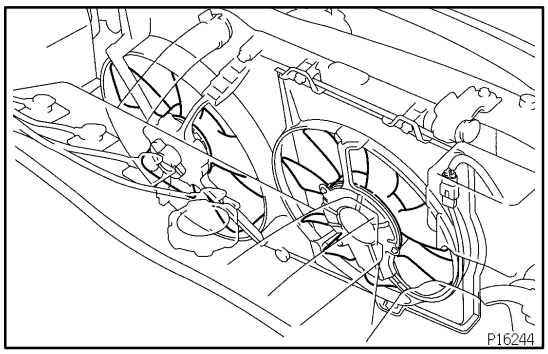

ELECTRIC COOLING FAN

CO0ZN-01

ON-VEHICLE INSPECTION

1. CHECK COOLING FAN OPERATION WITH LOW TEMPERATURE (Below 83˚C (181˚F))

(a) Turn the ignition switch ON.

(b) Check that the cooling fan stops.

If not, check the cooling fan relay and engine coolant temperature switch, and check for a separated connector or severed wire between the cooling fan relay and engine coolant temperature switch.

(c) Disconnect the engine coolant temperature switch connector.

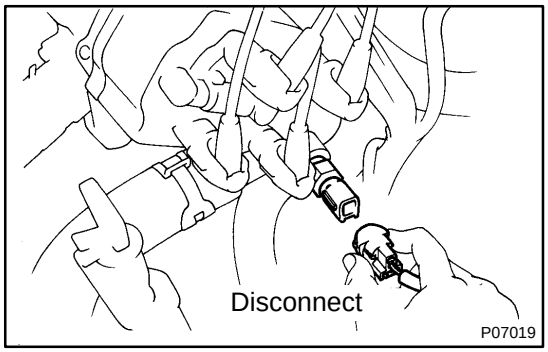

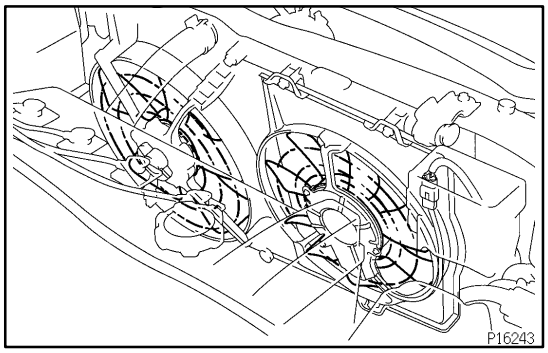

(d) Check that the cooling fan rotates.

If not, check the fuses, engine main relay, cooling fan relay, cooling fan, and check for a short circuit between the cooling fan relay and engine coolant temperature switch.

(e) Reconnect the engine coolant temperature switch connector.

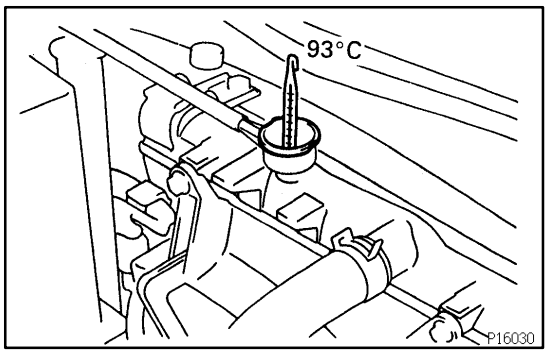

2. CHECK COOLING FAN OPERATION WITH HIGH TEMPERATURE (Above 93˚C (199˚F))

(a) Start the engine, and raise coolant temperature to above 93˚C (199˚F).

(b) Check that the cooling fan rotates.

If not, replace the engine coolant temperature switch.

CO0ZE-02

ON-VEHICLE INSPECTION

1. REMOVE RADIATOR CAP

CAUTION:

To avoid the danger of being burned, do not remove the radiator cap while the engine and radiator are still hot, as fluid and steam can be blown out under pressure.

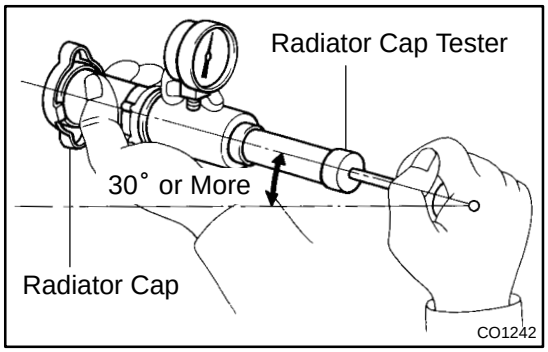

2. INSPECT RADIATOR CAP

NOTICE:

If the radiator cap has contaminations, always rinse it with water. When performing steps (a) and (b) below, keep the radiator pump tester at an angle of over 30° above the horizotal.

(a) Using a radiator cap tester, slowly pump the tester and check that air is coming from the vacuum valve.

Pump speed: 1 push/(3 seconds or more)

NOTICE:

Push the pump at a constant speed.

If air is not coming from the vacuum valve, replace the radiator cap.

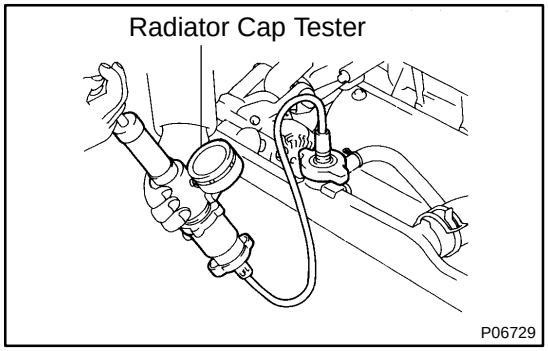

(b) Pump the tester and measure the relief valve opening pressure.

Pump speed: 1 push within 1 second

NOTICE:

This pump speed is for the first pump only (in order to close the vacuum valve). After this, the pump speed can be reduced.

Standard opening pressure:

74 - 103 kPa (0.75 - 1.05 kgf/cm^2, 10.7 - 14.9 psi)

Minimum opening pressure: 59 kPa (0.6 kgf/cm^2, 8.5 psi)

HINT:

Use the tester's maximum reading as the opening pressure.

If the opening pressure is less than minimum, replace the radiator cap.

3. INSPECT COOLING SYSTEM FOR LEAKS

(a) Fill the radiator with coolant and attach a radiator cap tester.

(b) Warm up the engine.

(c) Pump it to 118 kPa (1.2 kgf/cm^2, 17.1 psi), and check that the pressure does not drop.

If the pressure drops, check the hoses, radiator or water pump for leaks. If no external leaks are found, check the heater core, cylinder block and head.

4. REINSTALL RADIATOR CAP

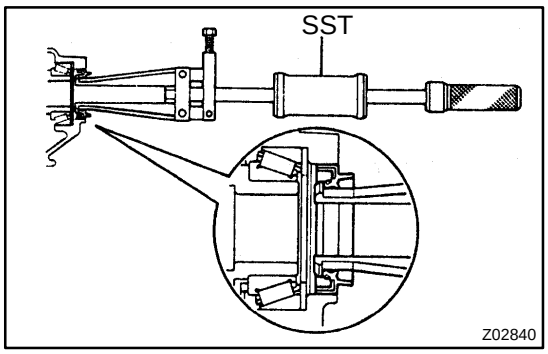

DIFFERENTIAL OIL SEAL

AX0R3-01

ON-VEHICLE REPAIR

1. DRAIN ATF

2. REMOVE DRIVE SHAFT

(See page SA-18)

3. REMOVE OIL SEAL

Using SST, pull out the oil seal.

SST 09308-00010

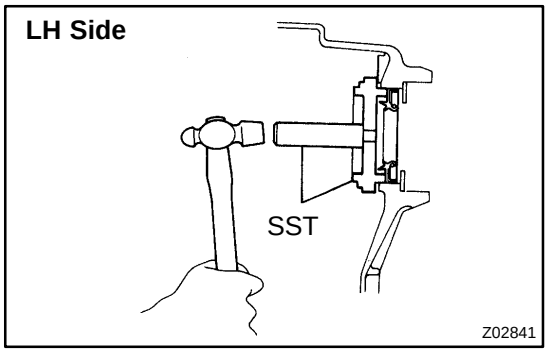

4. INSTALL LH SIDE OIL SEAL

(a) Using SST and a hammer, drive in a new oil seal.

SST 09350-32014 (09351-32111, 09351-32130)

Oil seal drive in depth:

4.3 ± 0.5 mm (0.209 ± 0.020 in.)

(b) Coat the lip of oil seal with MP grease.

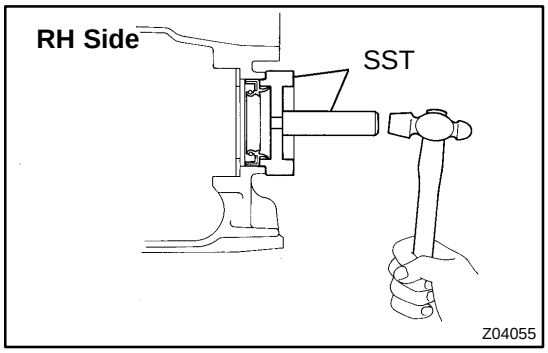

5. INSTALL RH SIDE OIL SEAL

(a) Using SST and a hammer, drive in a new oil seal until SST makes contact with the case surface.

SST 09350-32014 (09351-32150, 09351-32130)

Oil seal drive in depth:

3.1 ± 0.5 mm (0.122 ± 0.020 in.)

(b) Coat the lip of oil seal with MP grease.

6. INSTALL DRIVE SHAFT

(See page SA-24)

7. FILL AND CHECK FLUID LEVEL

(See page DI-262)

DIFFERENTIAL OIL SEAL

AX08X-03

ON-VEHICLE REPAIR

1. REMOVE LH AND RH DRIVE SHAFTS
(See page SA-18)

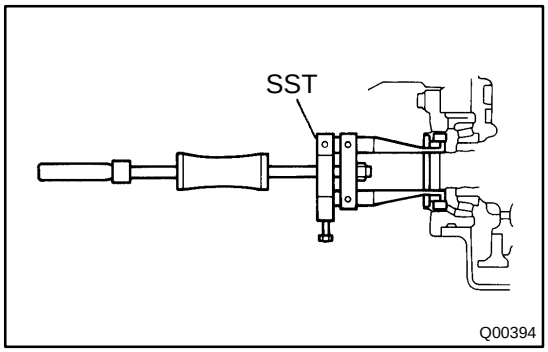

2. REMOVE BOTH SIDE GEAR SHAFT OIL SEALS

Using SST, drive out the oil seals on both sides.

SST 09308 - 00010

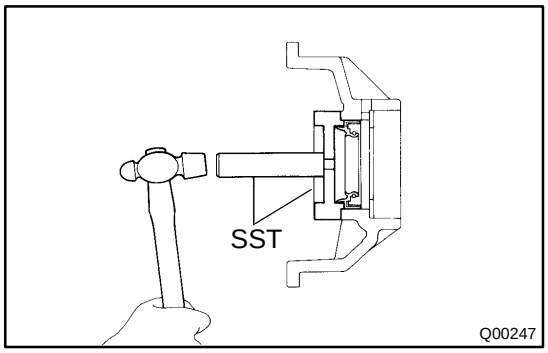

3. INSTALL BOTH SIDE GEAR SHAFT OIL SEALS

(a) Using SST and a hammer, drive in new oil seals on both sides.

SST 09350 - 32014 (09351 - 32130, 09351 - 32150)

Oil seal depth :
LH : 2.7 ± 0.5 mm (0.106 ± 0.020 in.)
RH : 0 ± 0.5 mm (0 ± 0.020 in.)

(b) Coat the lip of the oil seal with MP grease.

4. INSTALL LH AND RH DRIVE SHAFTS
(See page SA-24)

5. CHECK ATF AND CHECK FLUID LEVEL
(See page DI-219)

THROTTLE CABLE

AX08W-03

ON-VEHICLE REPAIR

1. **DISCONNECT THROTTLE CABLE**
2. **REMOVE PARK/NEUTRAL POSITION SWITCH (See page AX-4)**
3. **REMOVE VALVE BODY (See page AX-5)**

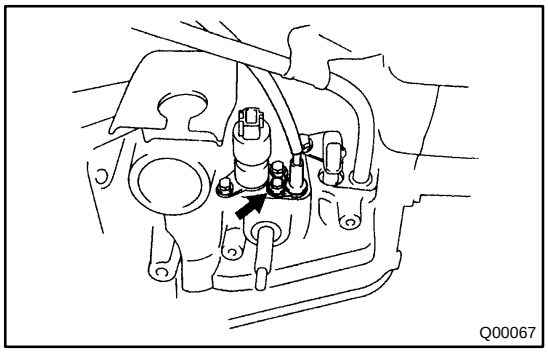

4. **REMOVE THROTTLE CABLE**

(a) Remove the retaining bolt and plate.

(b) Pull out the cable from the transaxle case.

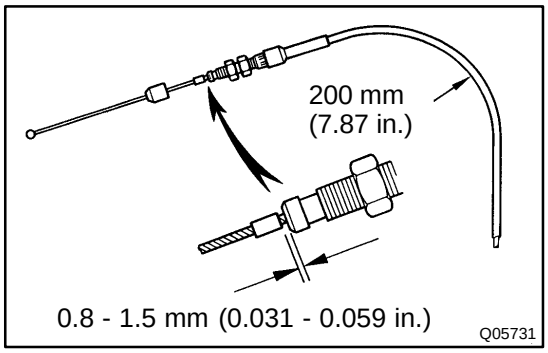

5. **INSTALL THROTTLE CABLE**

If the throttle cable is new, perform the following operations (a) - (c).

(a) Bent the cable so that there is a radius of about 200 mm (7.87 in.).

(b) Pull the inner cable lightly until the resistance is slightly felt, and hold it there.

(c) Stake the stopper, 0.8 - 1.5mm (0.031 - 0.059 in.) from the end of the outer cable.

(d) Insert the throttle cable in the transaxle case and install the retaining plate and bolt.

6. **INSTALL VALVE BODY (See page AX-5)**
7. **INSTALL PARK/NEUTRAL POSITION SWITCH (See page AX-4)**
8. **CONNECT THROTTLE CABLE**
9. **FILL ATF AND CHECK FLUID LEVEL (See page DI-219)**
10. **ADJUST THROTTLE CABLE (See page DI-219)**

VALVE BODY ASSEMBLY

AX12E-01

ON-VEHICLE REPAIR

1. REMOVE DRAIN PLUG AND DRAIN ATF

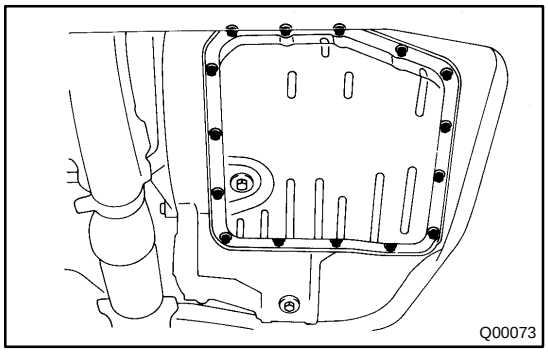
Q00073

2. REMOVE OIL PAN AND GASKET

Remove the 15 bolts, oil pan and gasket.

NOTICE:

Some fluid will remain in the oil pan.

3. REMOVE 2 MAGNETS FROM OIL PAN

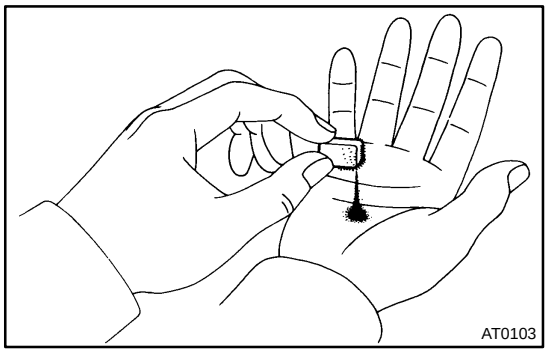
AT0103

4. EXAMINE PARTICLES IN PAN

Remove the magnets and use them to collect any steel chips. Look at the chips and particles in the pan and magnet carefully to anticipate what type of wear you will find in the transaxle.

- Steel (magnetic) : bearing, gear and plate wear
- Brass (non-magnetic) : bushing wear

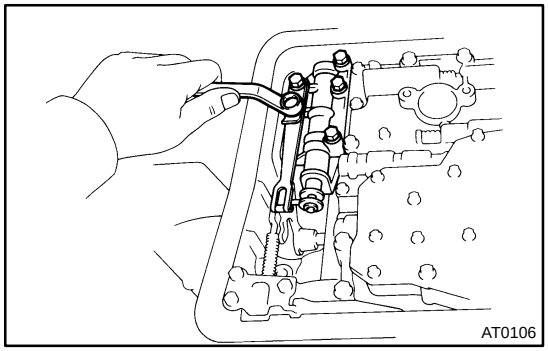
AT0106

5. REMOVE MANUAL DETENT SPRING AND MANUAL VALVE

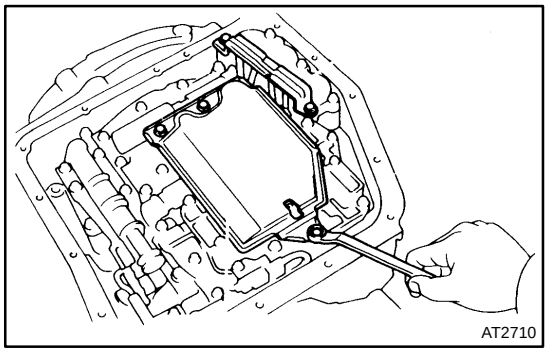
AT2710

6. REMOVE PIPE BRACKET AND OIL STRAINER

(a) Remove the 3 bolts and oil strainer.

(b) Remove the 2 bolts and pipe bracket.

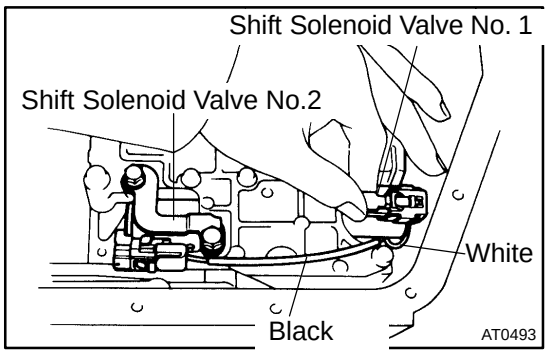

7. DISCONNECT SHIFT SOLENOID VALVE NO.1 AND NO.2 CONNECTORS

8. REMOVE OIL PIPE

Pry up both tube ends with a large screwdriver and remove the 4 pipes.

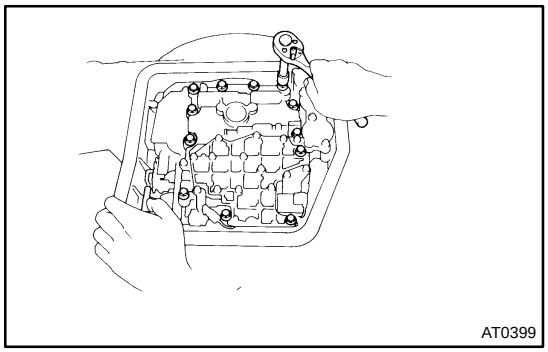

9. REMOVE VALVE BODY

(a) Remove the 12 bolts.

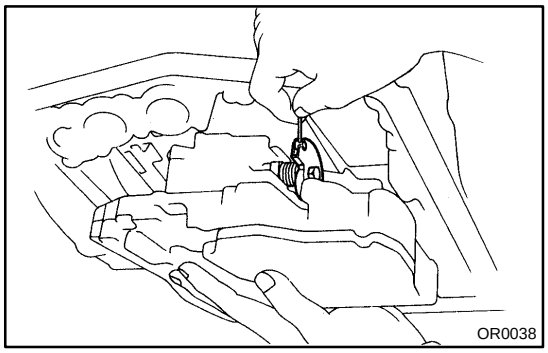

(b) Disconnect the throttle cable.

(c) Remove the valve body.

10. REMOVE 2ND BRAKE APPLY GASKET

11. INSTALL NEW 2ND BRAKE APPLY GASKET

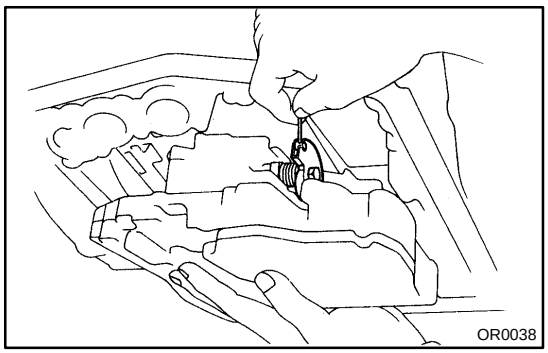

12. INSTALL VALVE BODY

(a) While holding the cam down with your hand, slip the cable end into the slot.

(b) Place valve body into place.

NOTICE:

Be careful not to entangle the solenoid wire.

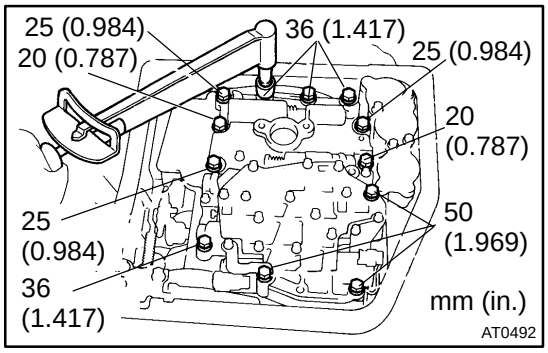

(c) Hand-tighten the 12 bolts first. Then torque them with a torque wrench.

HINT:

Each bolt length is indicated in the illustration.

Torque: 10 N·m (100 kgf·cm, 7 ft·lbf)

13. INSTALL OIL PIPE

Using a plastic hammer, install the 4 pipes.

NOTICE:

Be careful not to bend or damage the pipes.

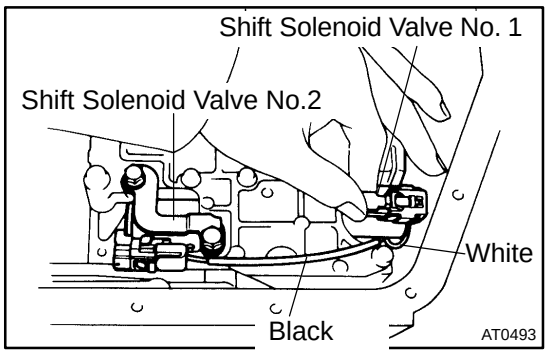

14. CONNECT 2 SOLENOID CONNECTORS

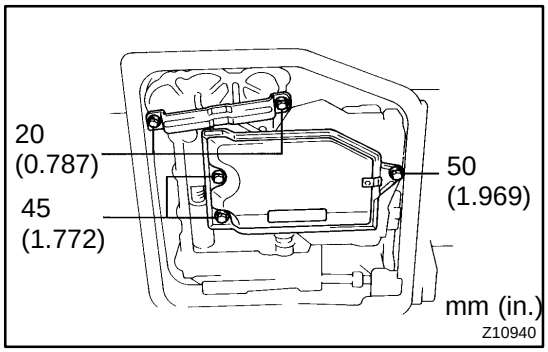

15. INSTALL PIPE BRACKET AND OIL STRAINER

HINT:

Each bolt length is indicated in the illustration.

(a) Install the pipe bracklet with 2 bolts.
Torque: 10 N·m (100 kgf·cm, 7 ft·lbf)

(b) Install the oil strainer with 3 bolts.
Torque: 10 N·m (100 kgf·cm, 7 ft·lbf)

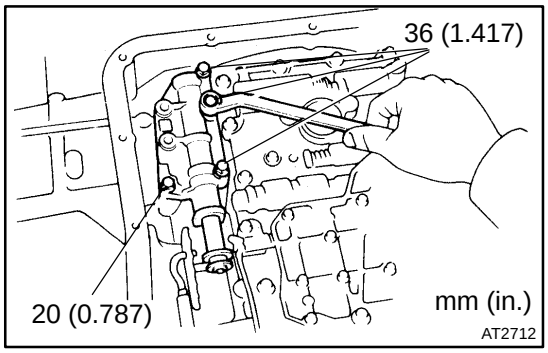

16. INSTALL MANUAL VALVE BODY AND DETENT SPRING

(a) Align the manual valve with the pin on the manual shaft lever.

(b) Lower the manual valve body into place.

(c) Hand-tighten the 4 bolts first. Then, tighten them with a torque wrench.

HINT:

Each bolt length is indicated in the illustration.
Torque: 10 N·m (100 kgf·cm, 7 ft·lbf)

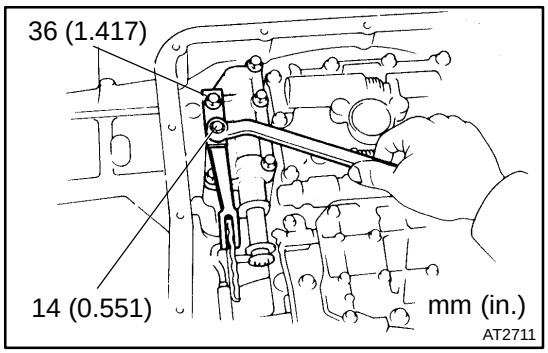

(d) Place the detent spring on the manual valve body and hand-tighten the 2 bolts first. Then, tighten them with a torque wrench.

HINT:

Each bolt length is indicated in the illustration.
Torque: 10 N·m (100 kgf·cm, 7 ft·lbf)

(e) Check that the manual valve lever is touching the center of the detent spring tip roller.

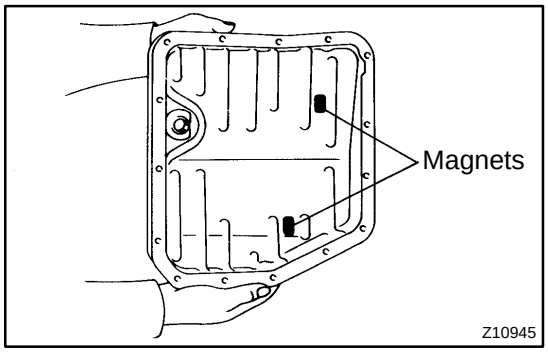

17. INSTALL 2 MAGNETS TO OIL PAN

NOTICE:

Make sure that the magnet does not interfere with the oil pipe.

18. INSTALL OIL PAN

(a) Install a new gasket and oil pan.

(b) Install the 15 bolts.
Torque: 4.9 N·m (50 kgf·cm, 43 in.·lbf)

19. INSTALL DRAIN PLUG
Torque: 49 N·m (500 kgf·cm, 36 ft·lbf)

20. FILL ATF AND CHECK FLUID LEVEL
(See page DI-219)

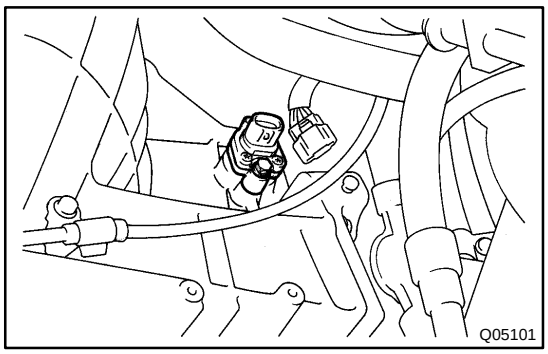

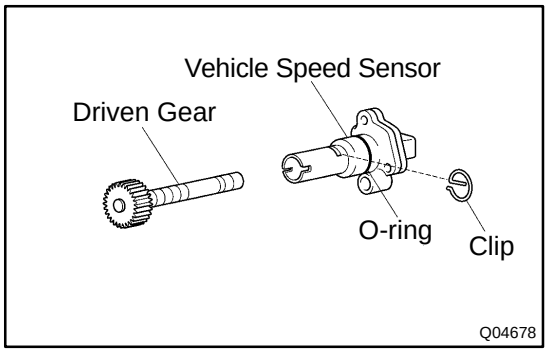

VEHICLE SPEED SENSOR

AX08T-04

ON-VEHICLE REPAIR

1. DISCONNECT VEHICLE SPEED SENSOR CONNECTOR

2. REMOVE VEHICLE SPEED SENSOR ASSEMBLY

(a) Remove the bolt and vehicle speed sensor assembly.

(b) Remove the clip and speedometer driven gear from the vehicle speed sensor.

(c) Remove the O-ring from the vehicle speed sensor.

3. INSTALL VEHICLE SPEED SENSOR ASSEMBLY

(a) Coat a new O-ring with ATF and install it to the vehicle speed sensor.

(b) Install the speedometer driven gear to the vehicle speed sensor with clip.

(c) Install the vehicle seed sensor assembly with the bolt.
Torque: 16 N·m (160 kgf·cm, 12 ft·lbf)

4. CONNECT VEHICLE SPEED SENSOR CONNECTOR

SHIFT LOCK SYSTEM

AX0R8-02

LOCATION

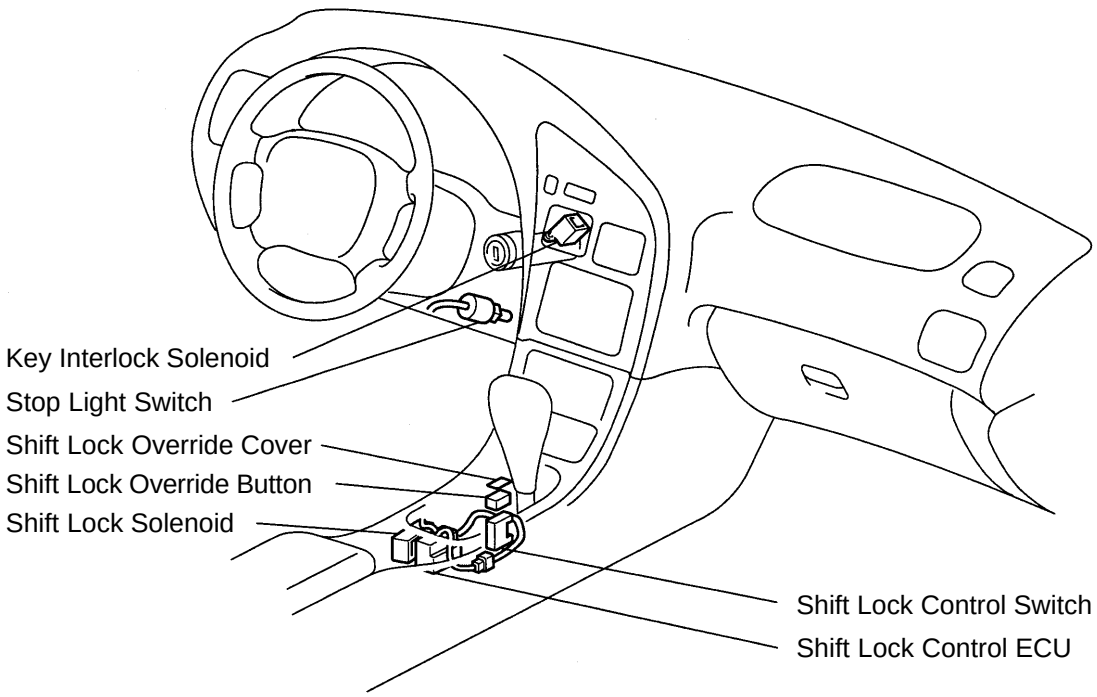

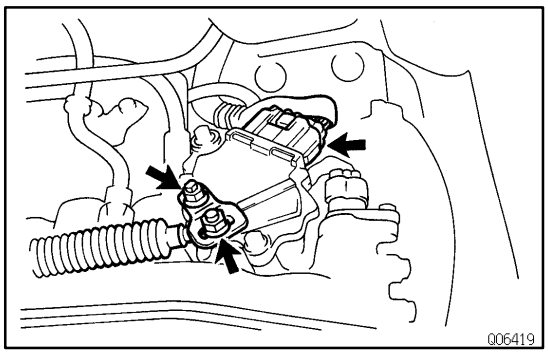

PARK/NEUTRAL POSITION (PNP) SWITCH

AX0QY-02

ON-VEHICLE REPAIR

1. REMOVE NO.2 ENGINE UNDER COVER

2. DISCONNECT CONTROL CABLE FROM CONTROL SHAFT LEVER

3. DISCONNECT PARK/NEUTRAL POSITION SWITCH CONNECTOR

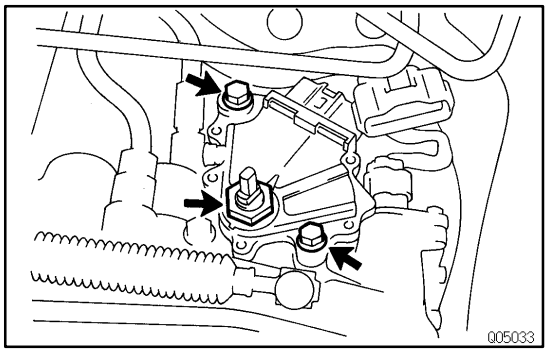

4. REMOVE PARK/NEUTRAL POSITION SWITCH

(a) Remove the nut and control shaft lever.

(b) Pry off the lock plate and remove the control valve shaft nut.

(c) Remove the 2 bolts and pull out the park/neutral position switch.

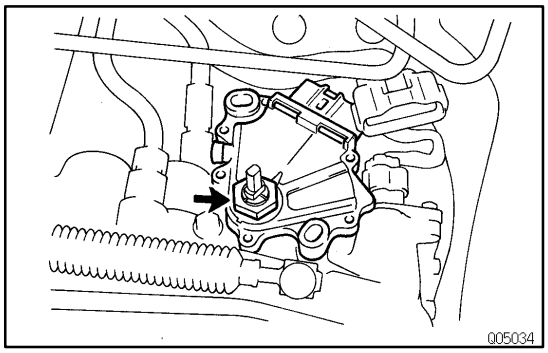

5. INSTALL PARK/NEUTRAL POSITION SWITCH

(a) Install the park/neutral position switch to the control shaft.

(b) Install a new lock plate and tighten the nut.
Torque: 6.4 N·m (70 kgf·cm, 61 in.·lbf)

(c) Stake the nut with the lock plate.

(d) Temporarily install the control shaft lever.

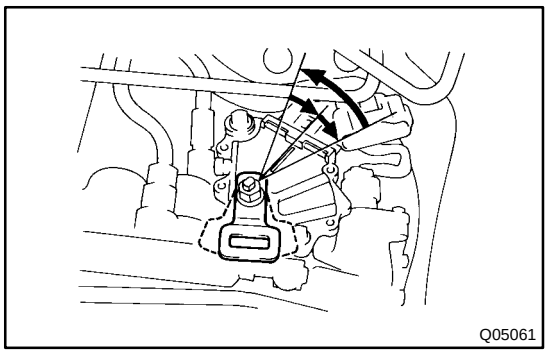

(e) Turn the lever counterclockwise until it stops, then turn it clockwise 2 notches.

(f) Remove the control shaft lever.

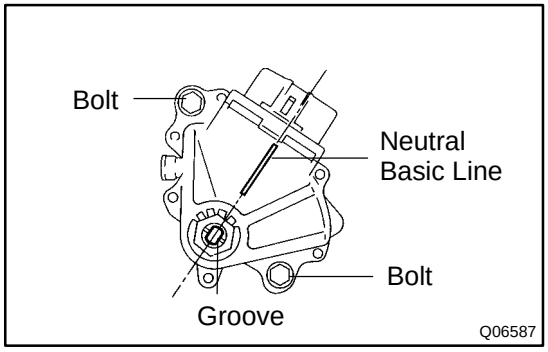

(g) Adjust the park/neutral position switch.
(See page DI-262)

HINT:
Align the groove and neutral basic line.

(h) Install and tighten the 2 bolts.
Torque: 5.4 N·m (55 kgf·cm, 48 in.·lbf)

6. INSTALL CONTROL SHAFT LEVER

7. CONNECT CONTROL CABLE TO CONTROL SHIFT LEVER
Torque: 13 N·m (135 kgf·cm, 10 ft·lbf)

8. INSTALL NO.2 ENGINE UNDER COVER

THROTTLE CABLE

AX0R2-02

ON-VEHICLE REPAIR

1. **DISCONNECT THROTTLE CABLE FROM ENGINE**
2. **DISCONNECT SHIFT CONTROL CABLE FROM CONTROL SHAFT LEVER**
3. **REMOVE PARK/NEUTRAL START SWITCH (See page AX-3)**
4. **REMOVE DRAIN PLUG AND DRAIN ATF**
5. **REMOVE VALVE BODY (See page AX-5)**
6. **REMOVE THROTTLE CABLE**

Remove the retaining bolt and pull out the throttle cable.

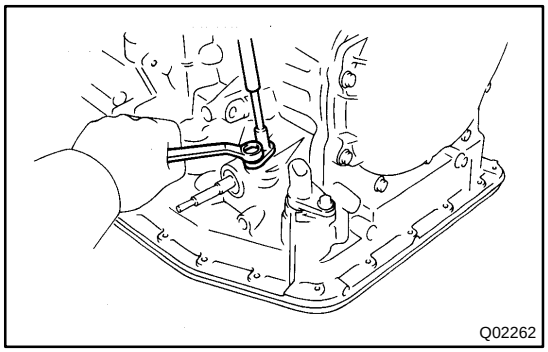

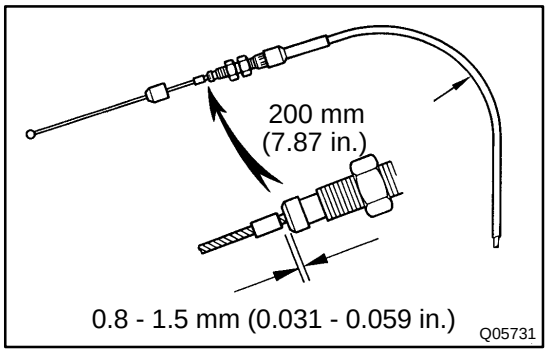

7. **INSTALL THROTTLE CABLE**

If throttle cable is new, do the following operations (a) - (c).

(a) Bend the cable so there is a radius of about 200 mm (7.87 in.).

(b) Pull the inner cable lightly until slight resistance is felt, and hold it there.

(c) Stake the stopper, 0.8 - 1.5 mm (0.031 - 0.059 in.) from the end of the outer cable.

(d) Install a new O-ring to the throttle cable.

(e) Insert the throttle cable and install the retaining bolt.

8. **INSTALL VALVE BODY (See page AX-5)**
9. **INSTALL PARK/NEUTRAL START SWITCH (See page AX-3)**
10. **CONNECT SHIFT CONTROL CABLE TO CONTROL SHAFT LEVER**
    Torque: 13 N·m (130 kgf·cm, 9 ft·lbf)
11. **CONNECT THROTTLE CABLE TO ENGINE**
12. **INSTALL DRAIN PLUG**
    Torque: 17 N·m (175 kgf·cm, 13 ft·lbf)
13. **FILL ATF AND CHECK FLUID LEVEL (See page DI-262)**
14. **ADJUST THROTTLE CABLE (See page DI-262)**
15. **TEST DRIVE VEHICLE**

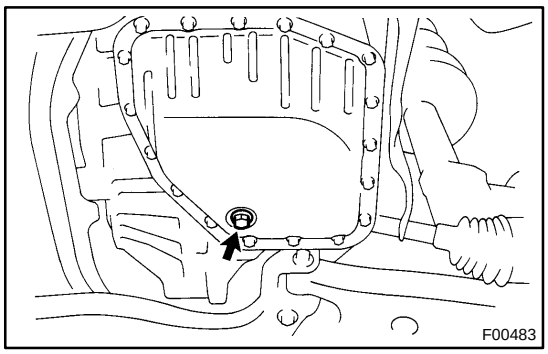

VALVE BODY ASSEMBLY

AX12F-01

ON-VEHICLE REPAIR

1. REMOVE DRAIN PLUG AND DRAIN ATF

2. REMOVE OIL PAN AND GASKET

Remove the 18 bolts and oil pan.

NOTICE:

Some fluid will remain in the oil pan.

3. REMOVE 2 MAGNETS FROM OIL PAN

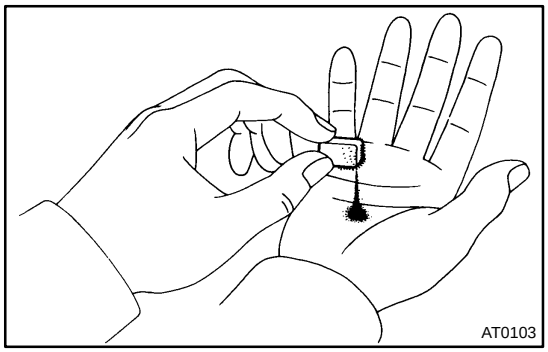

4. EXAMINE PARTICLES IN PAN

Remove the magnets and use them to collect any steel chips. Look carefully at the chips and particles in the pan and the magnet to anticipate what type of wear you will find in the transaxle.

- Steel (magnetic): bearing, gear and plate wear
- Brass (non-magnetic): bushing wear

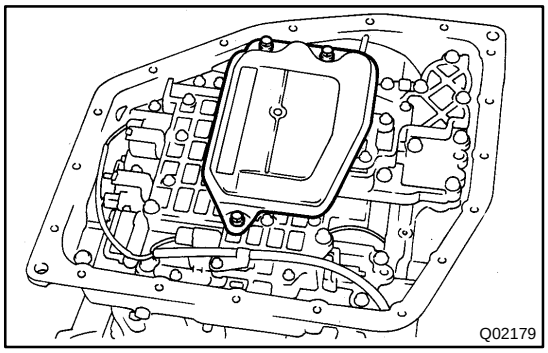

5. REMOVE OIL STRAINER

Remove the 3 bolts, oil strainer and gasket.

NOTICE:

Be careful as some fluid will come out with the oil strainer.

6. DISCONNECT 3 SOLENOID CONNECTORS

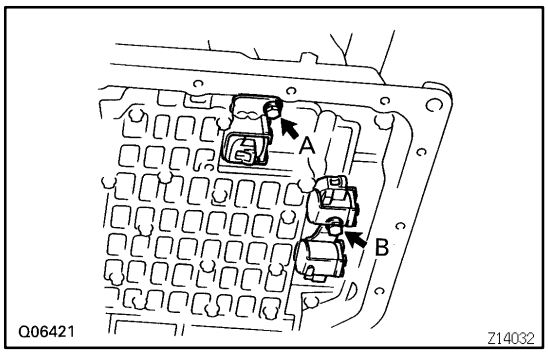

7. REMOVE 3 SOLENOID VALVES

Remove the 2 bolts and 3 solenoid valves.

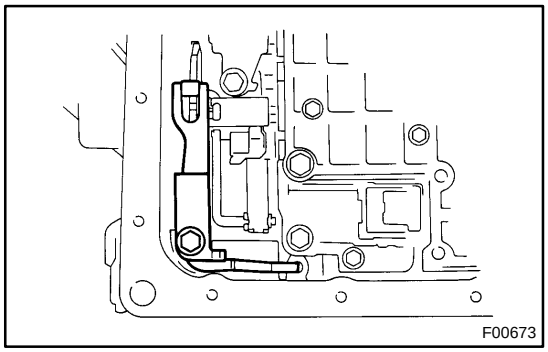

8. REMOVE MANUAL DETENT SPRING

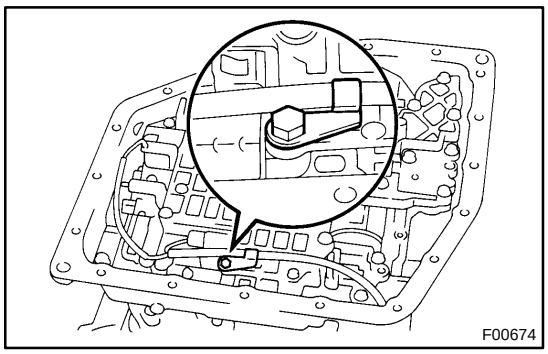

9. REMOVE VALVE BODY

(a) Remove the wire retainer.

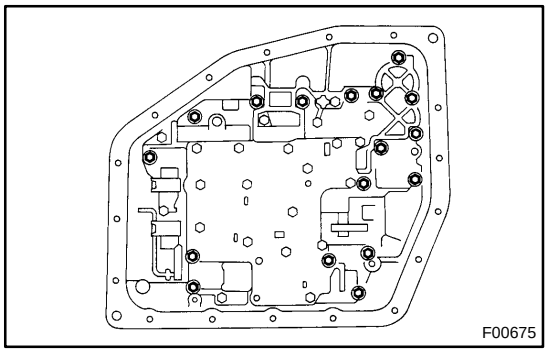

(b) Remove the 17 bolts.

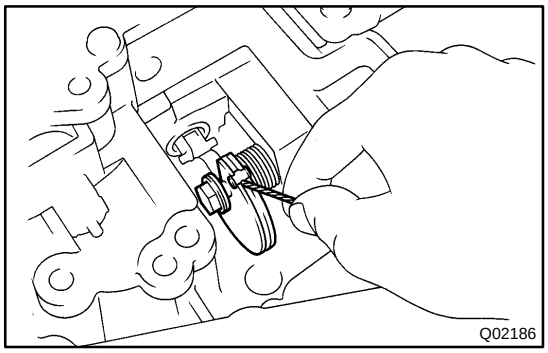

(c) Disconnect the throttle cable from the cam.

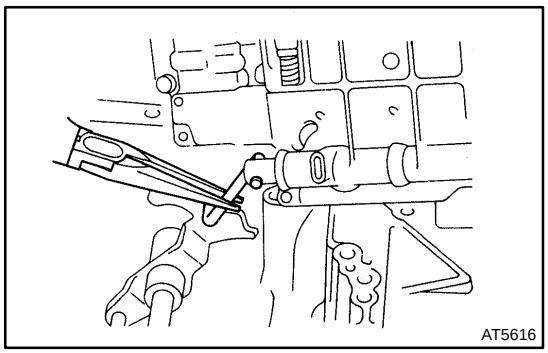

(d) While disconnecting the manual valve connecting rod from the manual valve lever, remove the valve body with the manual valve together.

10. INSTALL VALVE BODY

(a) While connecting the manual valve connecting rod to the manual valve lever, install the valve body with the manual valve together.

(b) Connect the throttle cable to the cam.

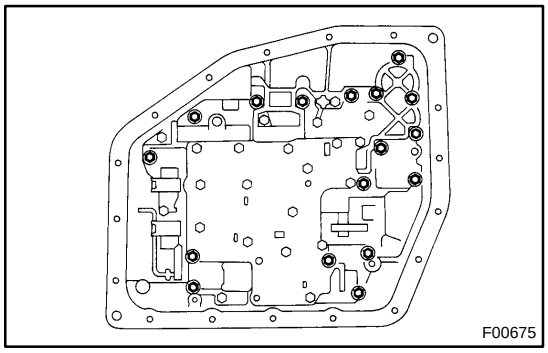

(c) Install the 17 bolts.
Torque: 10 N·m (100 kgf·cm, 7 ft·lbf)

(d) Install the wire retainer.
Torque: 6.4 N·m (65 kgf·cm, 56 in.·lbf)

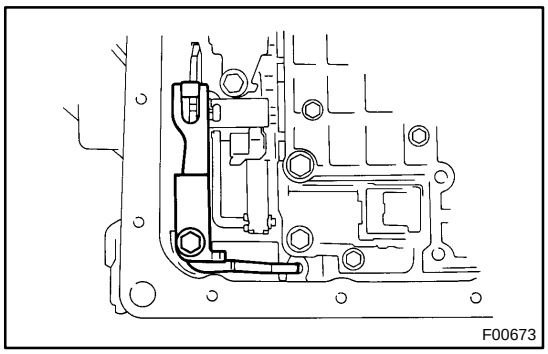

11. INSTALL MANUAL DETENT SPRING
Torque: 10 N·m (100 kgf·cm, 7 ft·lbf)

HINT:
Check that the manual valve lever is in contact with the center of the roller at the tip of the detent spring.

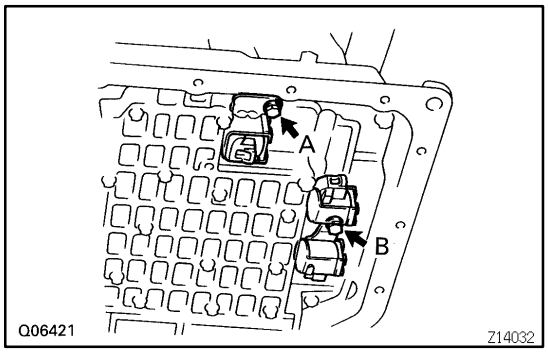

12. INSTALL 3 SOLENOID VALVES

Install the 3 solenoid valves and 2 bolts.

Torque:
A bolt: 6.4 N·m (65 kgf·cm, 56 ft·lbf)
B bolt: 10 N·m (100 kgf·cm, 7 ft·lbf)

13. CONNECT 3 SOLENOID CONNECTORS

14. INSTALL OIL STRAINER

(a) Install a new gasket to the oil strainer.

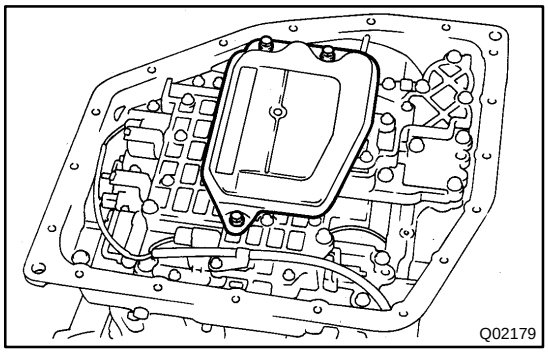

(b) Install the oil strainer with the 3 bolts.
Torque: 10 N·m (100 kgf·cm, 7 ft·lbf)

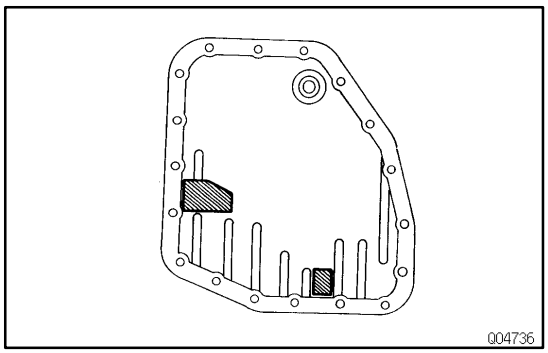

15. INSTALL 2 MAGNETS IN OIL PAN

16. INSTALL OIL PAN AND GASKET

(a) Install a new gasket to the oil pan and install them to the transaxle.

(b) Install the 18 bolts.
Torque: 5.3 N·m (55 kgf·cm, 48 in.·lbf)

17. INSTALL DRAIN PLUG
Torque: 17 N·m (175 kgf·cm, 13 ft·lbf)

18. FILL ATF AND CHECK FLUID LEVEL
(See page DI-262)

OPERATION

Planetary Gear Unit

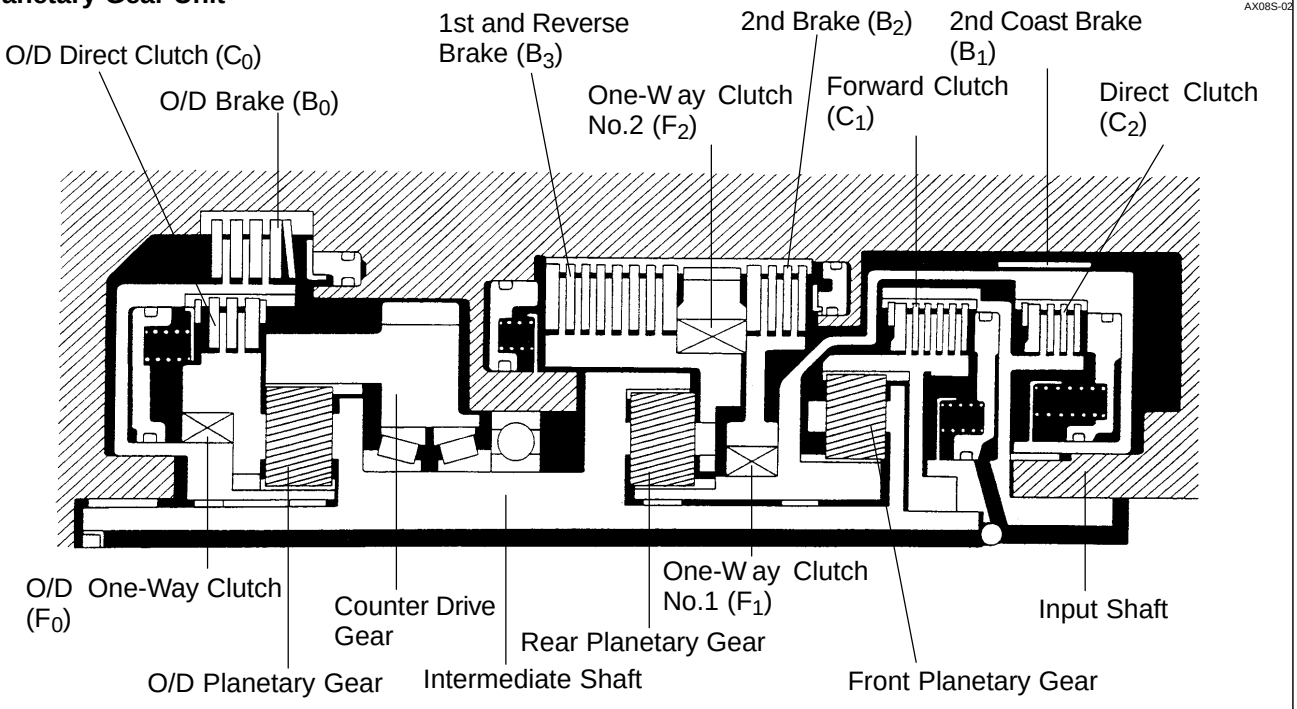

Shift Lever Position	Gear Position	C_0	C_1	C_2	B_0	B_1	B_2	B_3	F_0	F_1	F_2
P	Parking	○									
R	Reverse	○		○				○			
N	Neutral	○									
D	1st	○	○						○		○
	2nd	○	○				○		○	○	
	3rd	○	○	○			○		○		
	O/D		○	○	○		○				
2	1st	○	○						○		○
	2nd	○	○			○	○		○	○	
	*3rd	○	○	○			○		○		
L	1st	○	○					○	○		○
	*2nd	○	○			○	○		○	○	

*Down-shift only, no up-shift
○ : Operating

D02026

AX0QW-01

OPERATION

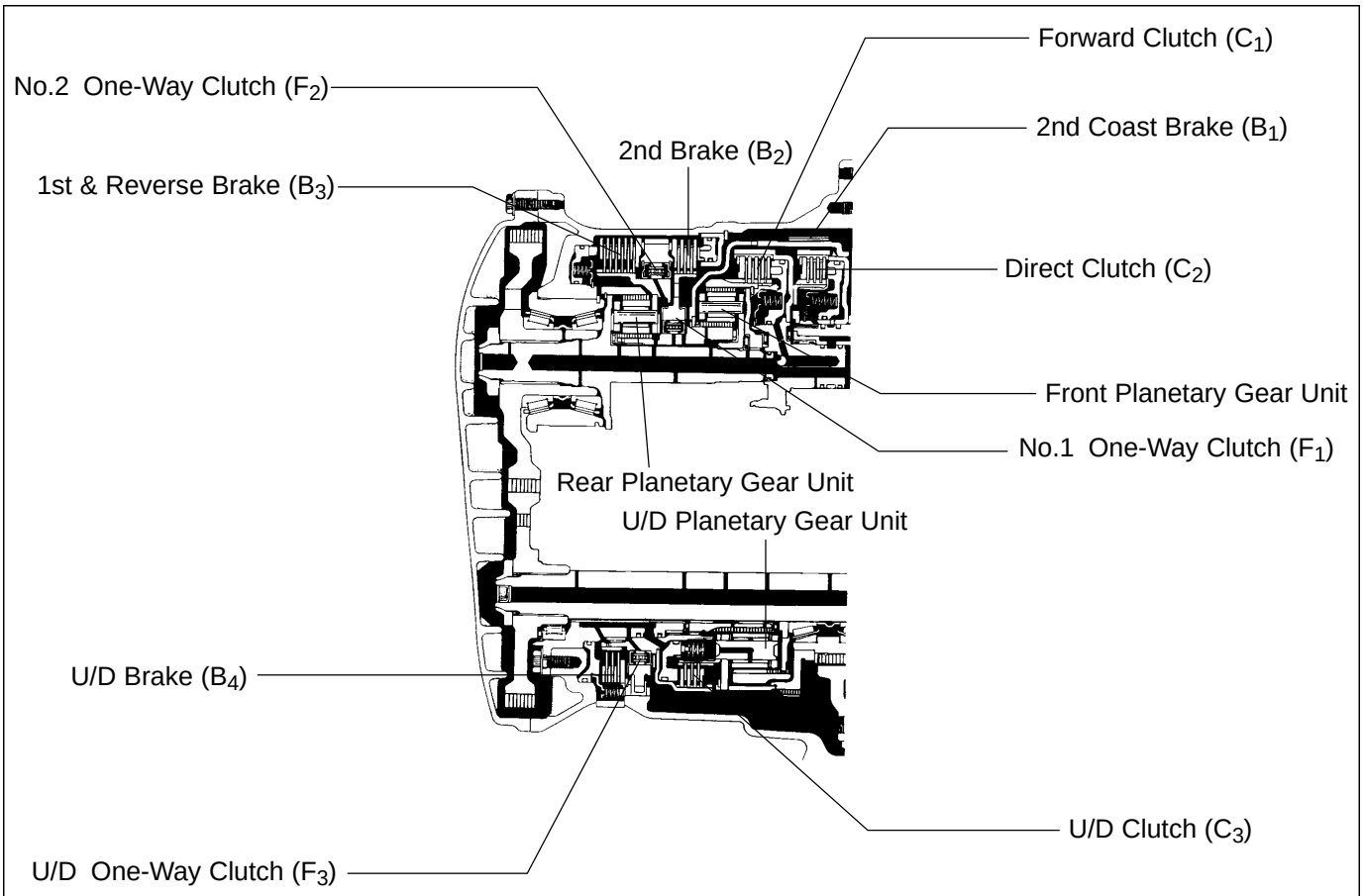

Shift Lever Range	Gear	Shift Solenoid Valve No.1	Shift Solenoid Valve No.2	C_1	C_2	C_3	B_1	B_2	B_3	B_4	F_1	F_2	F_3
P	Park	ON	OFF							●			
R	Reverse	ON	OFF		●				●	●			
N	Neutral	ON	OFF							●			
D	1st	ON	OFF	●						●		●	●
	2nd	ON	ON	●				●		●	●		●
	3rd	OFF	ON	●	●			●		●			●
	O/D	OFF	OFF	●	●	●		●					
2	1st	ON	OFF	●						●		●	●
	2nd	ON	ON	●			●	●		●	●		●
	3rd*	OFF	ON	●	●			●		●			●
L	1st	ON	OFF	●					●	●		●	●
	2nd*	ON	ON	●			●	●		●	●		●

● : Operating

*: Down-shift only in the 3rd gear for the 2 range and 2nd gear for the L range - no up-shift

F00484

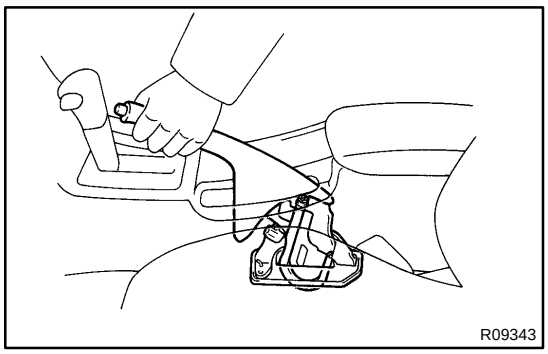
R09343

PARKING BRAKE LEVER

BR0Q0-04

ON-VEHICLE INSPECTION

1. CHECK PARKING BRAKE LEVER TRAVEL

Pull the parking brake lever all the way up, and count the number of clicks.

Parking brake lever travel at 196 N (20 kgf, 44.1 lbf): 4 - 7 clicks

If incorrect, adjust the parking brake.

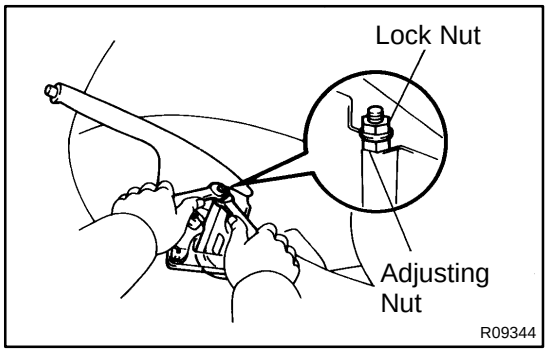

R09344

2. IF NECESSARY, ADJUST PARKING BRAKE

HINT:

Before adjusting the parking brake, make sure that the rear brake shoe clearance has been adjusted. For shoe clearance adjustment, see step 1 on page BR-45 .

(a) Remove the console box.

(b) Loosen the lock nut and turn the adjusting nut until the lever travel is correct.

(c) Tighten the lock nut.

Torque: 5.4 N·m (55 kgf·cm, 48 in.·lbf)

(d) Install the console box.

PARKING BRAKE

COMPONENTS

BR0QR-06

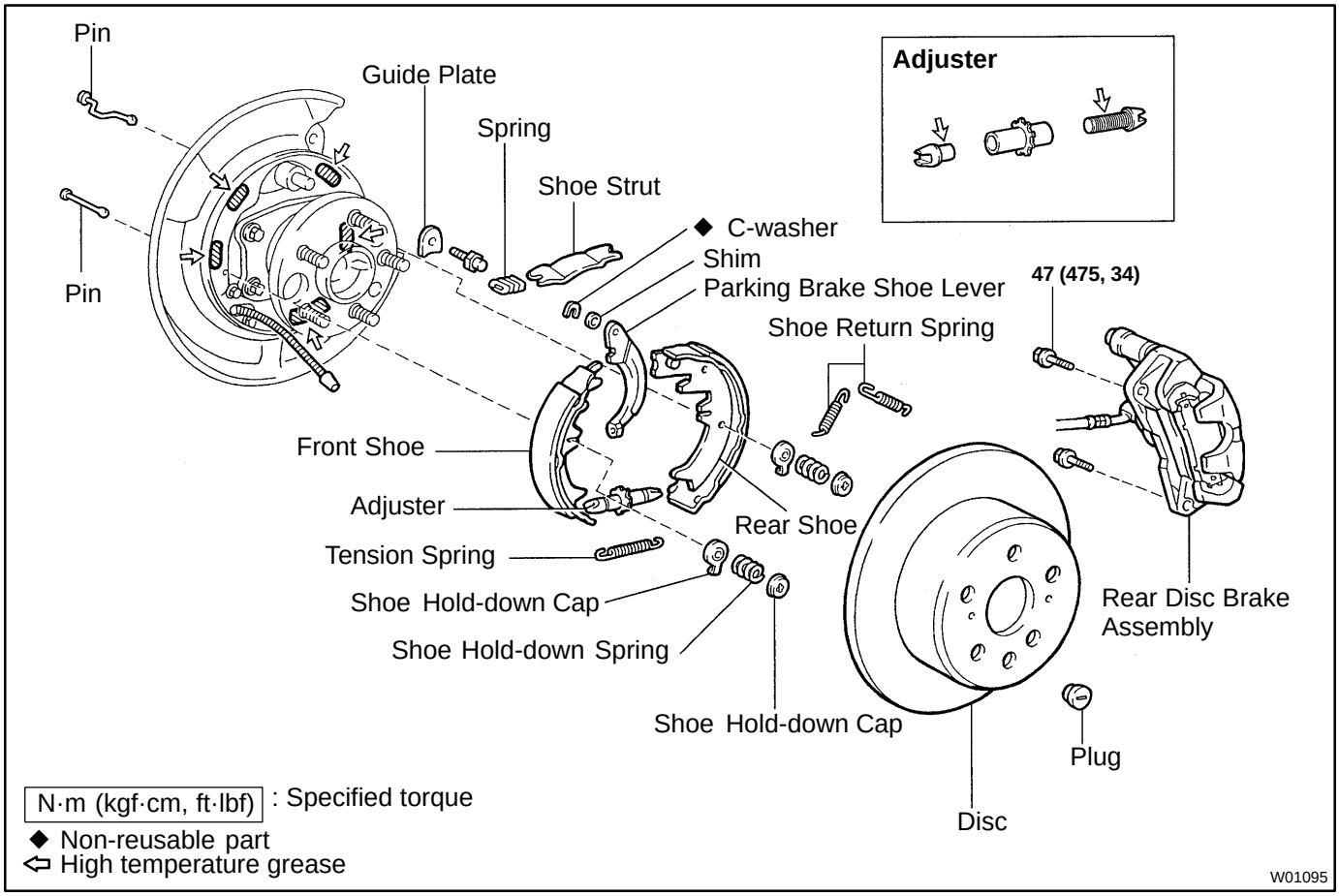

BR0QS-01

DISASSEMBLY

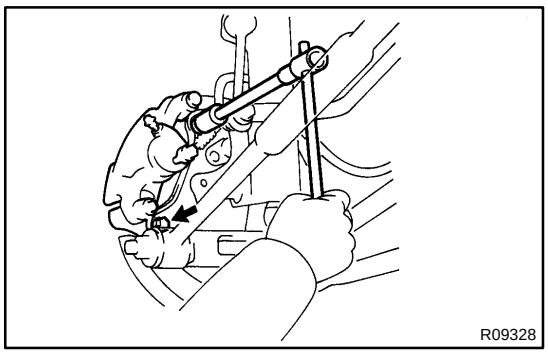

1. REMOVE REAR WHEEL

2. REMOVE REAR DISC BRAKE ASSEMBLY

(a) Remove the 2 mounting bolts and remove the disc brake assembly.

Torque: 47 N·m (475 kgf·cm, 34 ft·lbf)

(b) Suspend the disc brake securely. Ensure that the hose is not stretched.

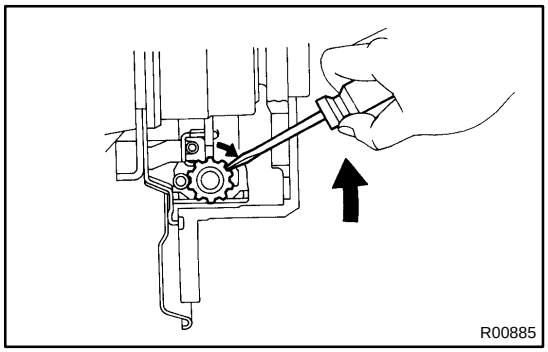

3. REMOVE DISC

HINT:

If the disc cannot be removed easily, turn the shoe adjuster until the wheel turns freely.

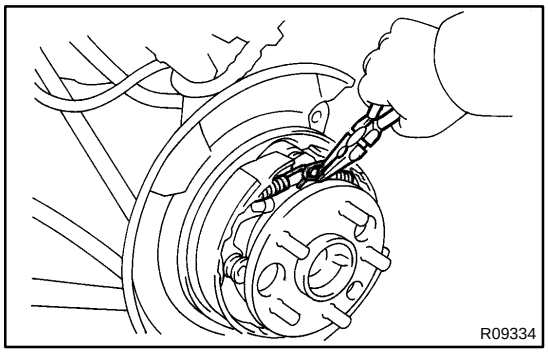

4. REMOVE SHOE RETURN SPRINGS

Using needle-nose pliers, remove the 2 shoe return springs.

5. REMOVE SHOE STRUT WITH SPRING

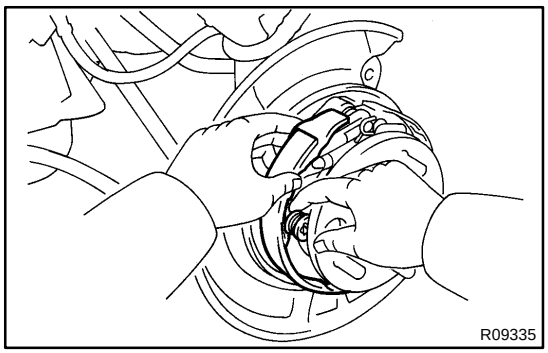

6. REMOVE FRONT SHOE AND ADJUSTER

(a) Slide out the front shoe and remove the shoe adjuster.

(b) Disconnect the tension spring and remove the front shoe.

7. REMOVE REAR SHOE AND TENSION SPRING

(a) Slide out the rear shoe.

(b) Remove the tension spring from the rear shoe.

(c) Remove the 4 shoe hold-down spring cups, springs and pins.

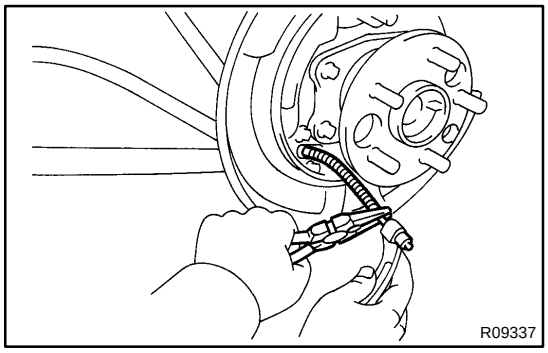

(d) Using needle-nose pliers, disconnect the parking brake cable from the parking brake shoe lever.

BR0QT-01

INSPECTION

1. INSPECT DISASSEMBLED PARTS

Inspect the disassembled parts for wear, rust or damage.

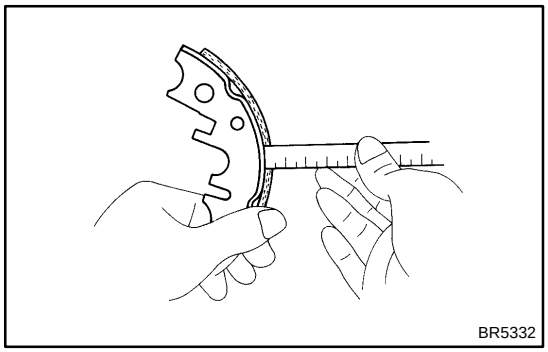

2. MEASURE BRAKE SHOE LINING THICKNESS

Using a ruler, measure the thickness of the shoe lining.

Standard thickness: 2.0 mm (0.079 in.)

Minimum thickness: 1.0 mm (0.039 in.)

If the lining thickness is at the minimum thickness or less, or if there is severe, uneven wear, replace the brake shoe.

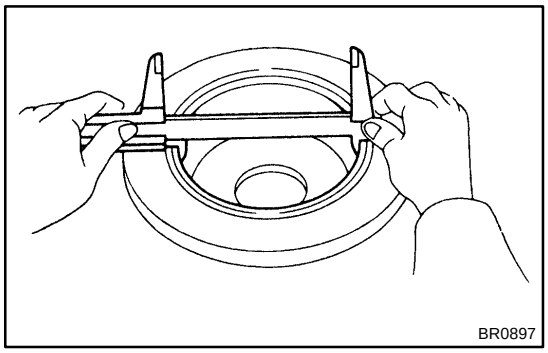

3. MEASURE DISC INSIDE DIAMETER

Using a vernier calipers, measure the inside diameter of the disc.

Standard inside diameter: 170.0 mm (6.690 in.)

Maximum inside diameter: 171.0 mm (6.732 in.)

Replace the disc if the inside diameter is at the maximum value or more. Replace the disc or grind it with a lathe if the disc is scored or is worn unevenly.

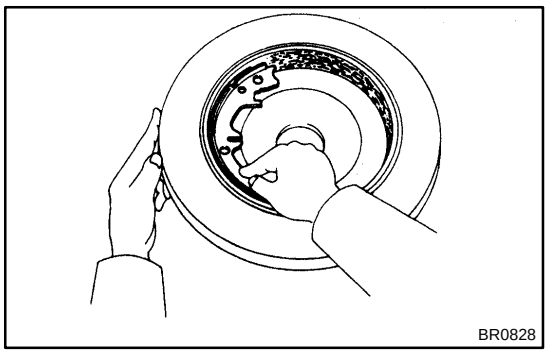

4. INSPECT PARKING BRAKE LINING AND DISC FOR PROPER CONTACT

Apply chalk to the inside surface of the disc, then grind down the brake shoe lining to fit. If the contact between the disc and the brake shoe lining is improper, repair it using a brake shoe grinder or replace the brake shoe assembly.

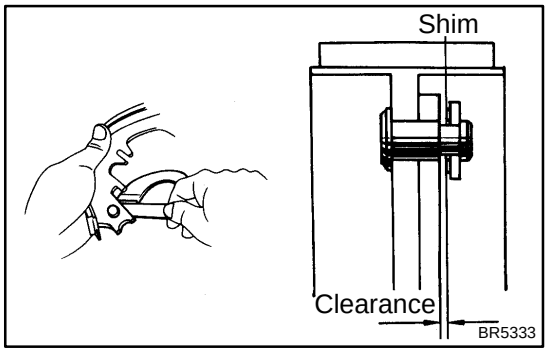

5. MEASURE CLEARANCE BETWEEN PARKING BRAKE SHOE AND LEVER

Using a feeler gauge, measure the clearance.

Standard clearance: Less than 0.35 mm (0.0138 in.)

If the clearance is not within the specification, replace the shim with one of the correct size.

Shim Thickness	Shim Thickness
0.3 mm (0.012 in.)	0.9 mm (0.035 in.)
0.6 mm (0.024 in.)	-

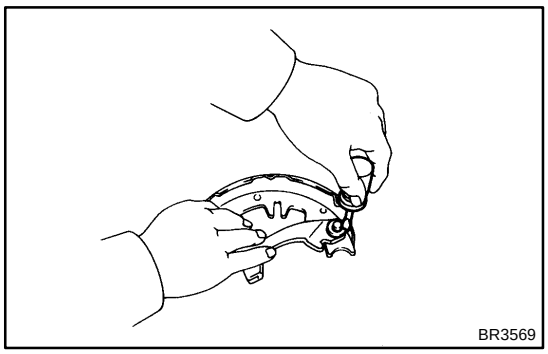

6. IF NECESSARY, REPLACE SHIM

(a) Using a screwdriver, remove the C-washer and shim.
(b) Install the correct size shim.
(c) Install a new C-washer.
(d) Remeasure the clearance.

BR0QU-01

REASSEMBLY

Reassembly is in the reverse order of disassembly (See page BR-44).

NOTICE:

Apply high temperature grease to the parts indicated by the arrows (See page BR-43).

1. ADJUST PARKING BRAKE SHOE CLEARANCE

(a) Temporarily install the hub nuts.

(b) Remove the hole plug.

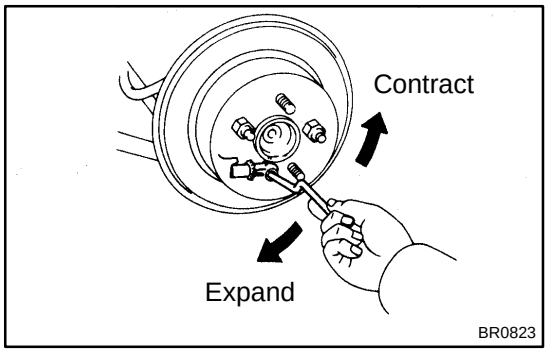

(c) Turn the adjuster and expand the shoes until the disc locks.

(d) Return the adjuster 8 notches.

(e) Install the hole plug.

2. SETTLING PARKING BRAKE SHOES AND DISC

(a) Drive the vehicle at about 50 km/h (31 mph) on a safe, level and dry road.

(b) With the parking brake release button pushed in, pull on the lever with 98 N (10 kgf, 19.8 lbf) of force.

(c) Drive the vehicle for about 400 meters (0.25 mile) in this condition.

(d) Repeat this procedure 2 or 3 times.

3. CHECK AND ADJUST PARKING BRAKE LEVER TRAVEL (See page BR-7)

DI54M-01

PARTS LOCATION

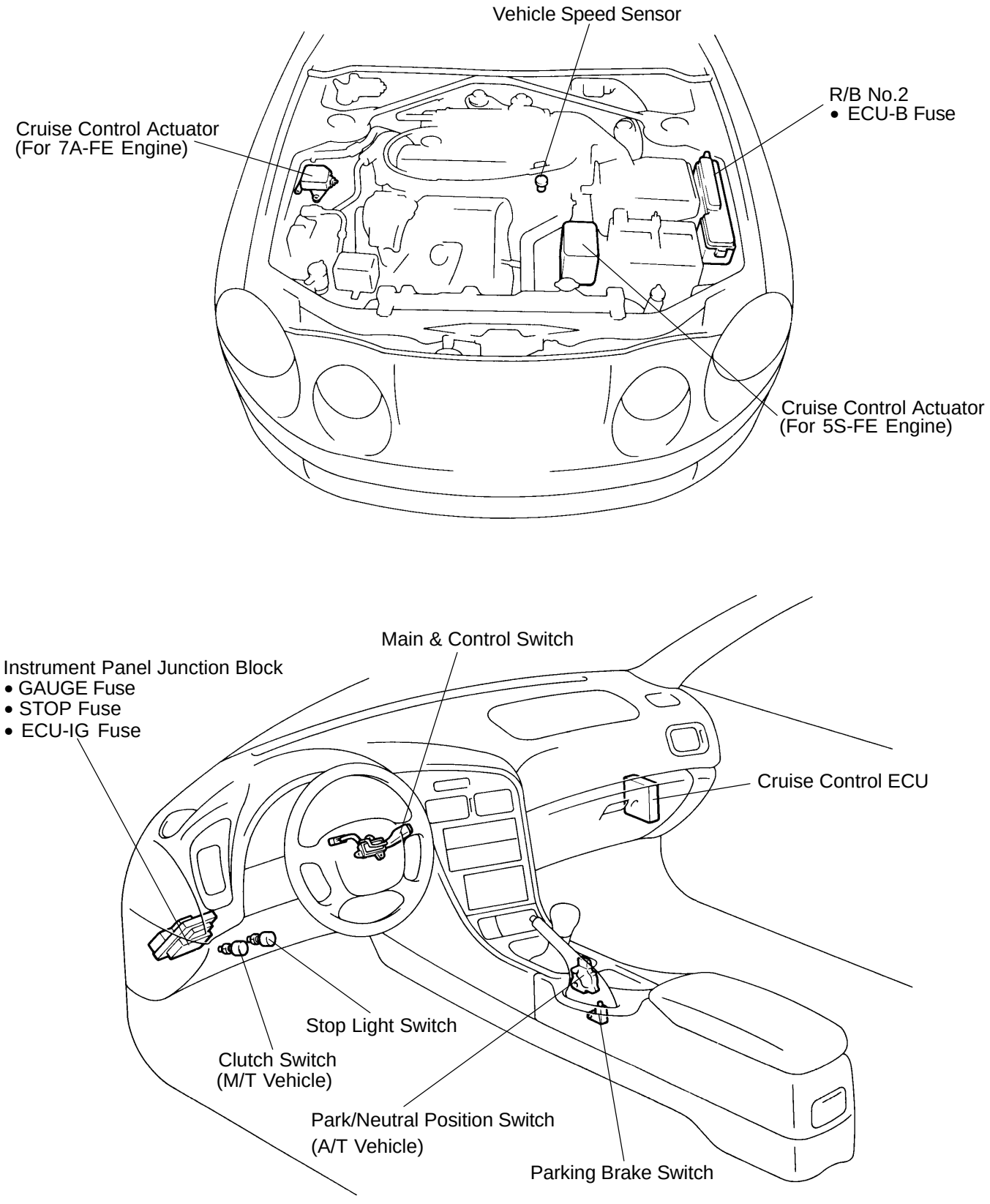

I00527

DI51M-02

PARTS LOCATION

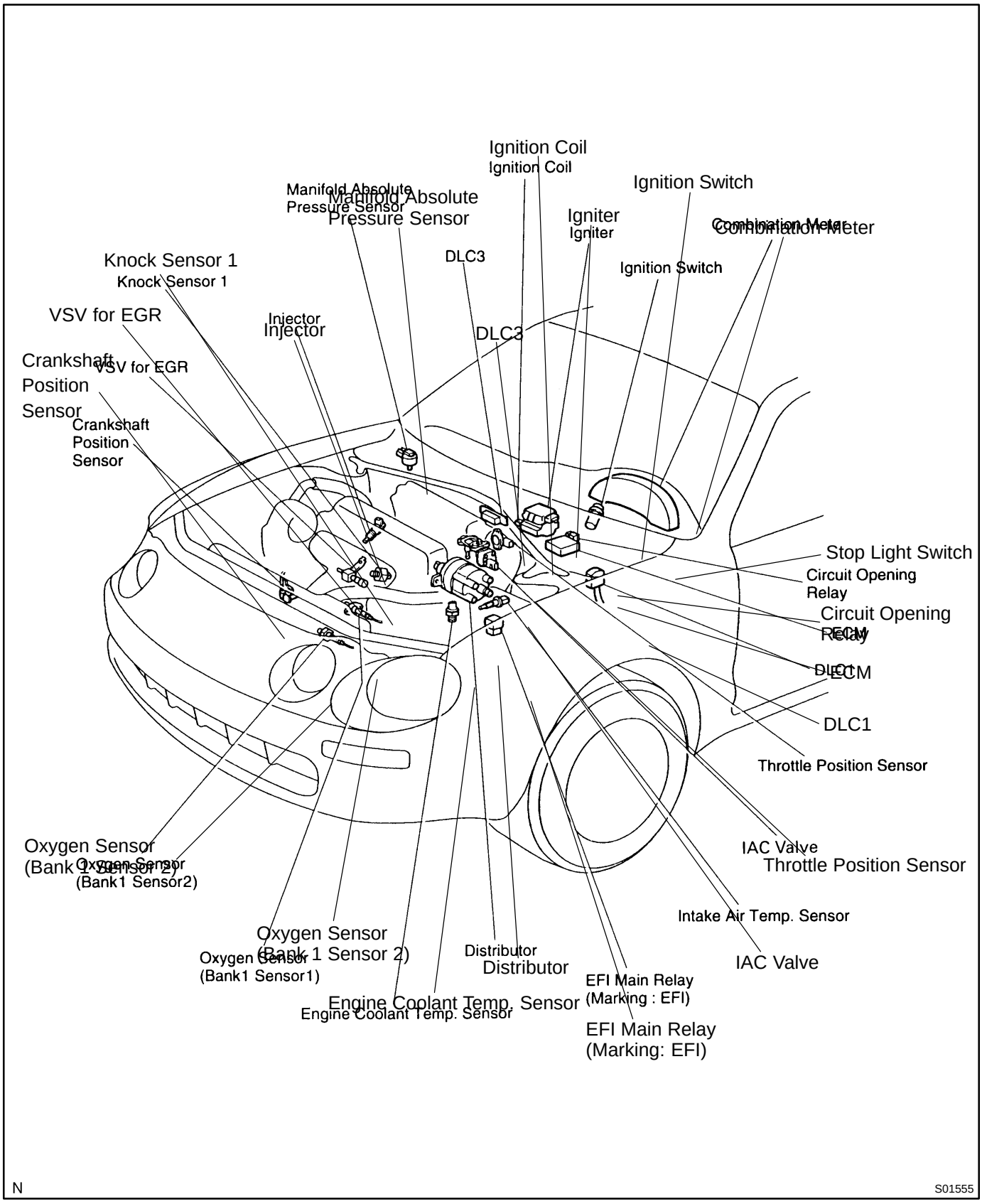

DI50J-02

PARTS LOCATION

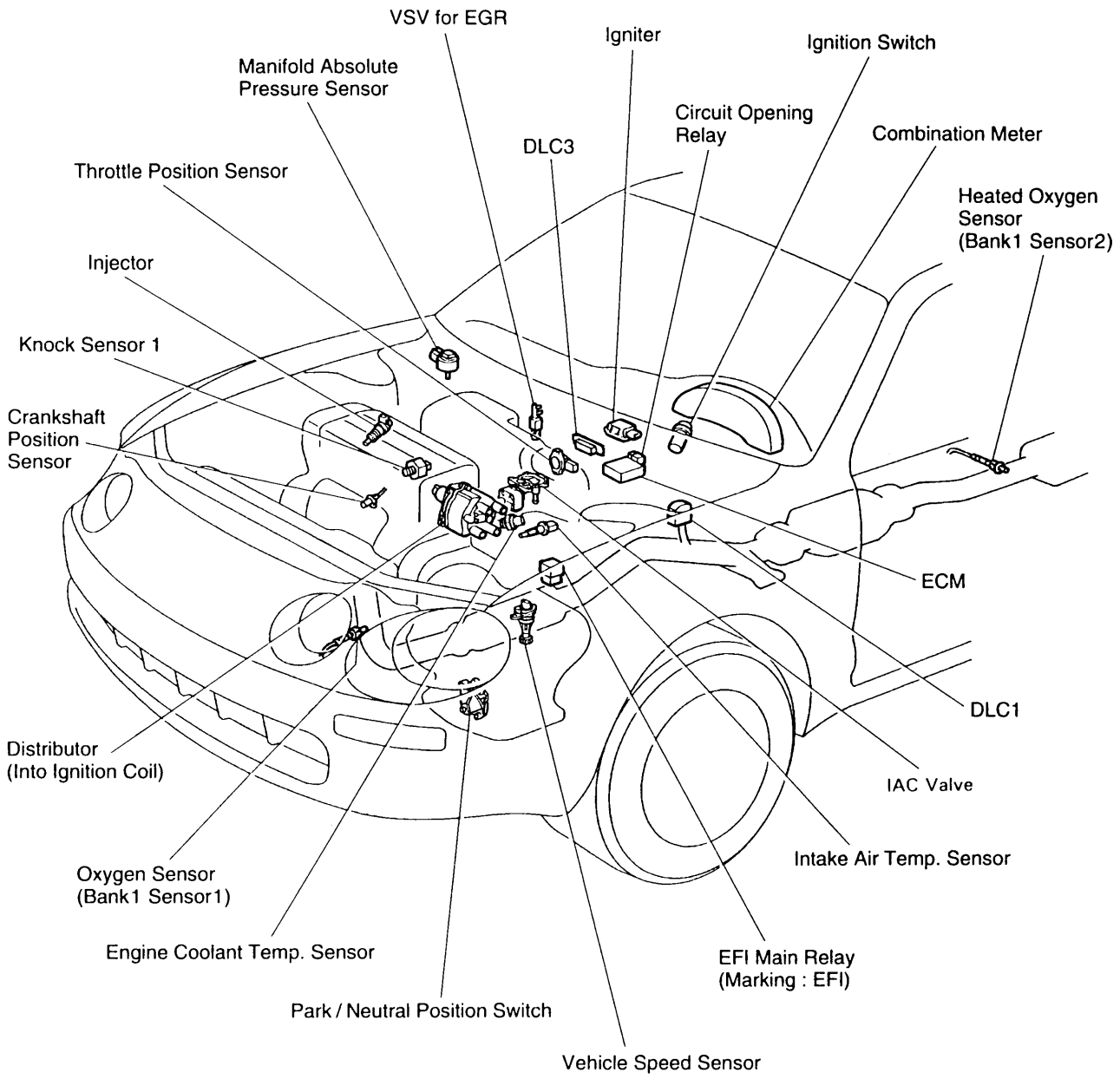

N

S01556

DI52N-02

PARTS LOCATION

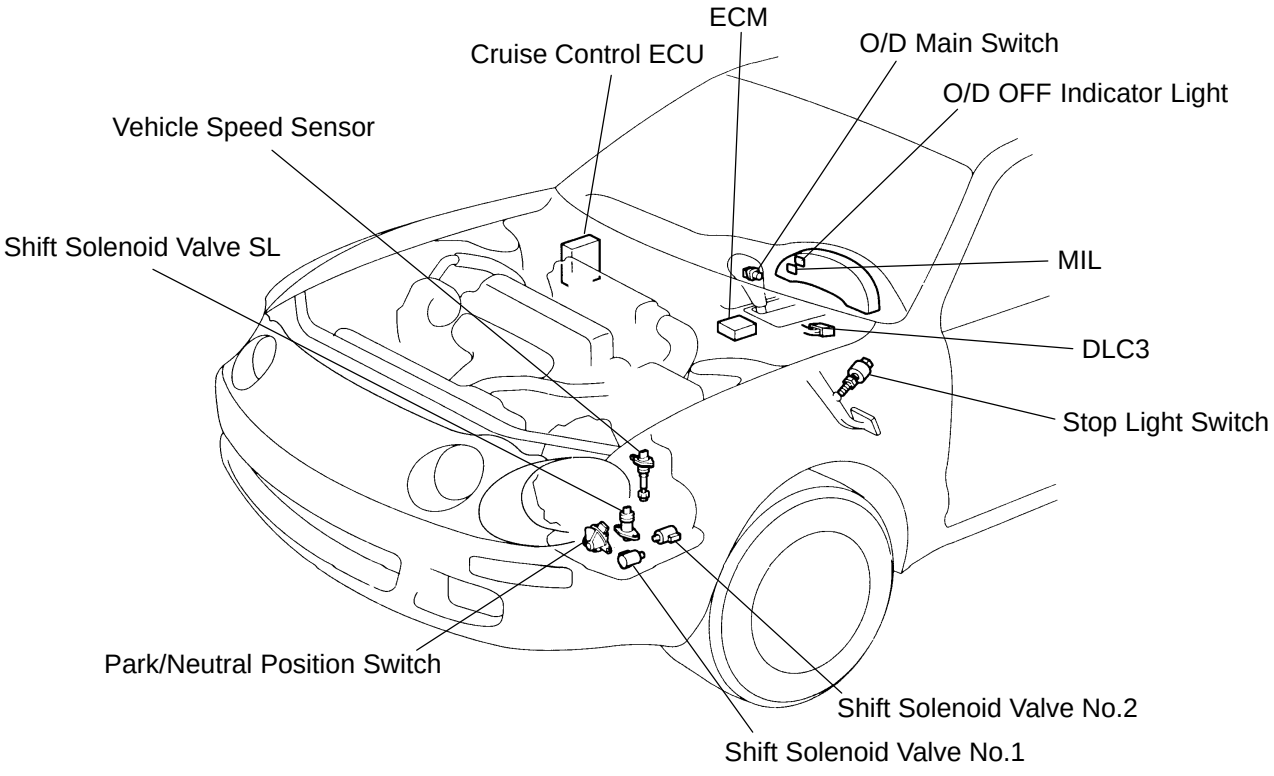

DI533-02

PARTS LOCATION

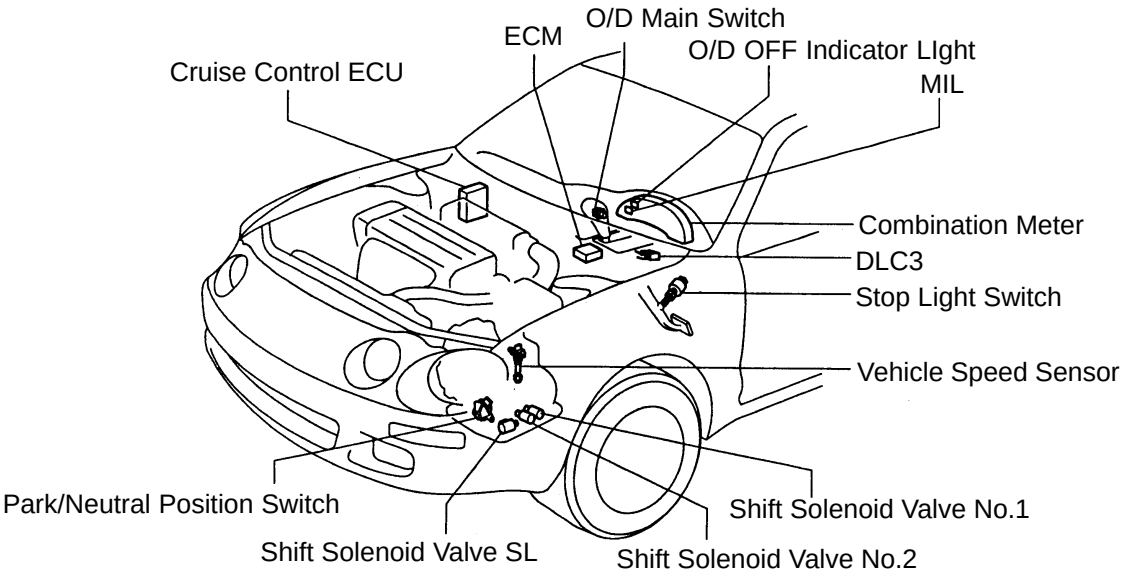

Q08718

DI53J-02

PARTS LOCATION

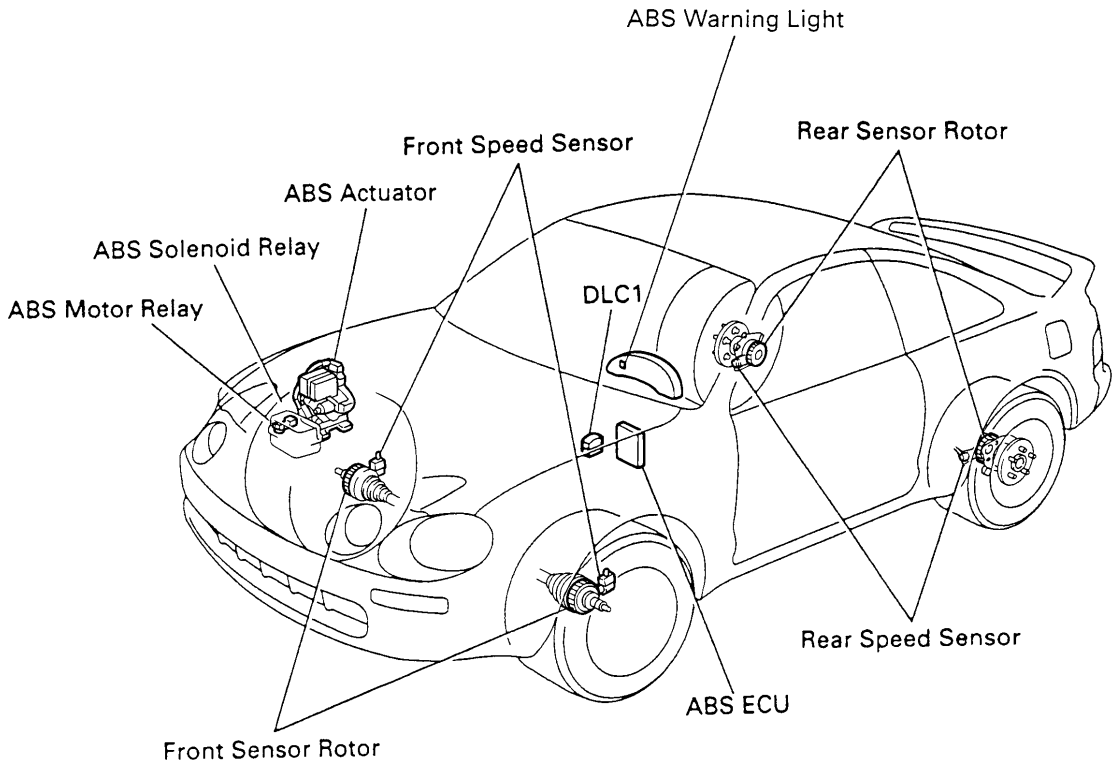

N

F14855

DI542-01

PARTS LOCATION

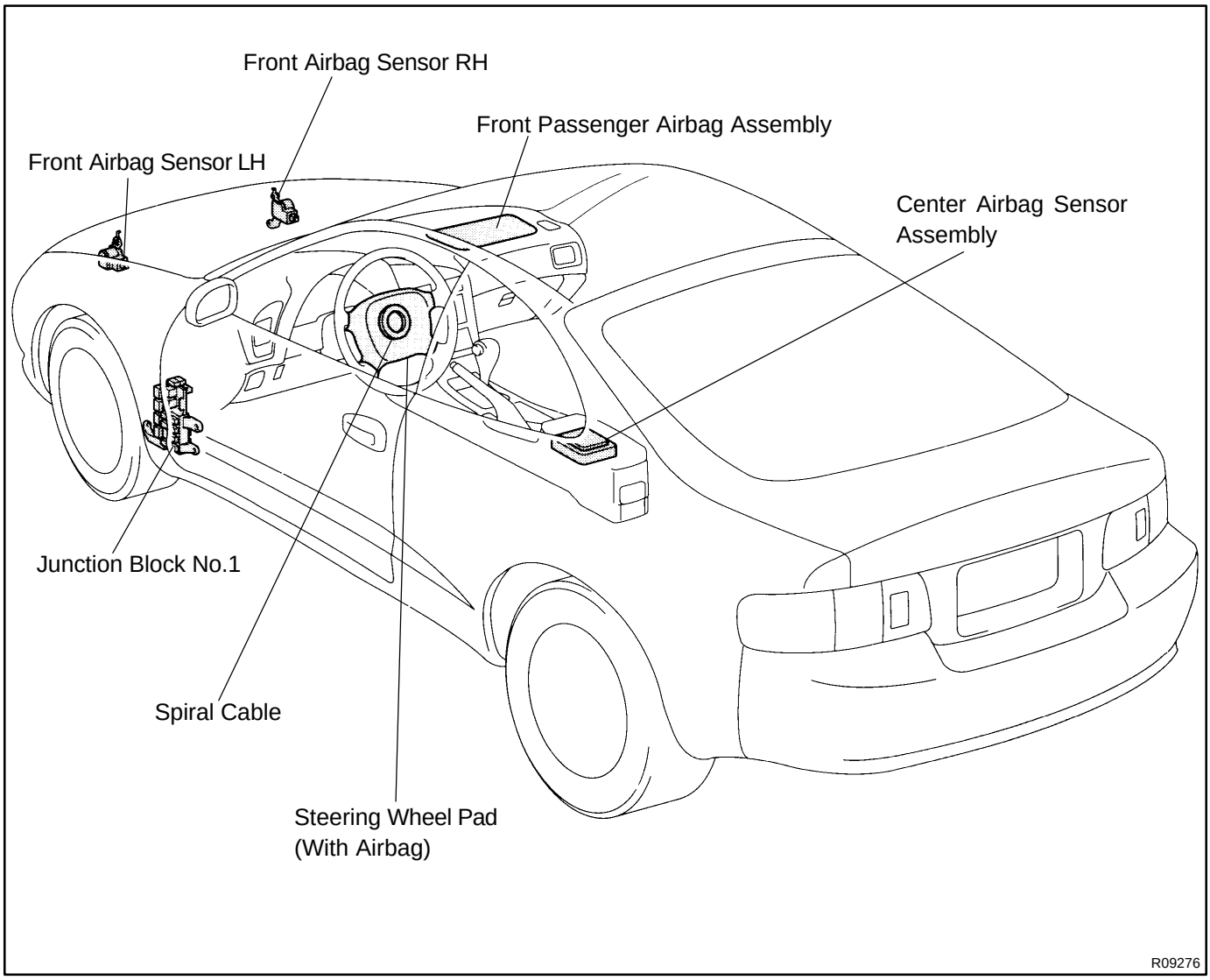

CHARGING SYSTEM

CH05W-01

PRECAUTION

- **Check that the battery cables are connected to the correct terminals.**
- **Disconnect the battery cables when the battery is given a quick charge.**
- **Do not do these tests with a high voltage insulation resistance tester.**
- **Never disconnect the battery while the engine is running.**

CHARGING SYSTEM

CH0E2-01

PRECAUTION

- **Check that the battery cables are connected to the correct terminals.**
- **Disconnect the battery cables when the battery is given a quick charge.**
- **Do not do these tests with a high voltage insulation resistance tester.**
- **Never disconnect the battery while the engine is running.**

AUTOMATIC TRANSAXLE SYSTEM

AX08R-01

PRECAUTION

If the vehicle is equipped with a mobile communication system, refer to the precautions in the IN section.

AUTOMATIC TRANSAXLE SYSTEM

AX0QV-01

PRECAUTION

If the vehicle is equipped with a mobile communication system, refer to the precautions in the IN section.

BODY ELECTRICAL SYSTEM

BE0OM-01

PRECAUTION

HINT:

Take care to observe the following precautions when performing inspections or removal and replacement of body electrical related parts.

1. HEADLIGHT SYSTEM

Halogen bulbs have pressurized gas inside and require special handling. They can burst if scratched or dropped. Hold a bulb only by its plastic or metal case.

Don't touch the glass part of a bulb with bare hands.

2. SRS (SUPPLEMENTAL RSTRAINT SYSTEM)

The CELICA is equipped with an SRS (Supplemental Restraint System) such as the driver airbag and front passenger airbag, failure to carry out service operation in the correct sequence could cause the SRS to unexpectedly deploy during servicing, possibly leading to a serious accident. Before servicing (including removal or installation of parts, inspection or replacement), be sure to read the precautionary notices in the RS section.

3. AUDIO SYSTEM

- If the negative (-) terminal cable is disconnected from the battery, the preset AM, FM 1 and FM 2 stations stored in memory are erased, so be sure to note the stations and reset them after the battery terminal is reconnected.
- If the negative (-) terminal cable is disconnected from the battery, the "ANTI-THEFT SYSTEM" will operate when the cable is reconnected, but the radio, tape player and CD player will not operate. Be sure to input the correct ID number so that the radio, tape player and CD player can be operated again.

4. MOBILE COMMUNICATION SYSTEM

If the vehicle is equipped with a mobile communication system, refer to precautions in the IN section.

MANUAL TRANSAXLE UNIT

COMPONENTS

MX0BF-01

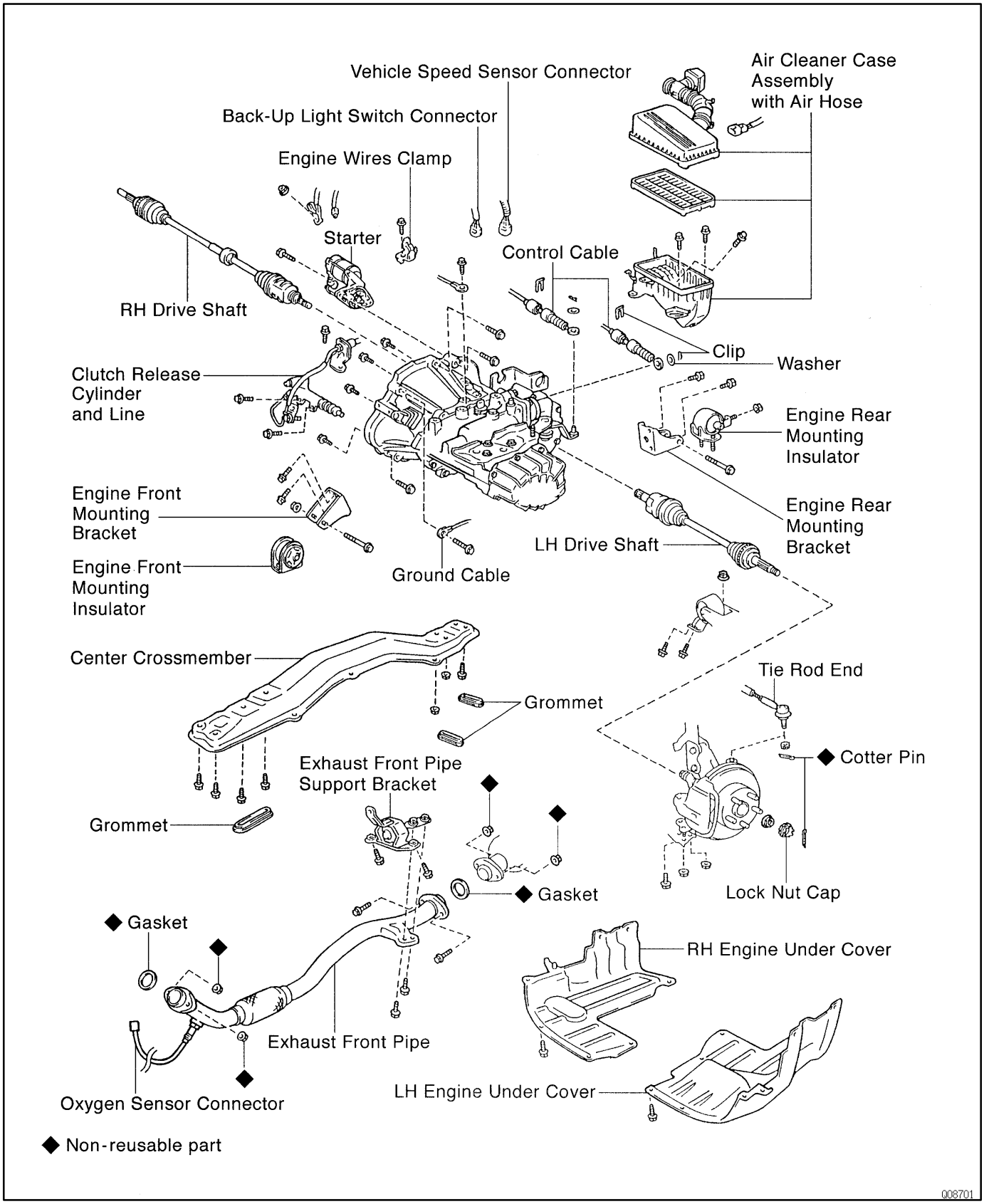

MANUAL TRANSAXLE SYSTEM

MX0E4-01

PRECAUTION

When working with FIPG material, you must observe the following items.

- **Using a razor blade and gasket scraper, remove all the old FIPG material from the gasket surfaces.**
- **Thoroughly clean all components to remove all the loose material.**
- **Clean both sealing surfaces with a non-residue solvent.**
- **Apply FIPG in an approx. 1 mm (0.04 in.) wide bead along the sealing surface.**
- **Parts must be assembled within 10 minutes of application. Otherwise, the FIPG material must be removed and reapplied.**

MANUAL TRANSAXLE SYSTEM

MX0E1-01

PRECAUTION

When working with FIPG material, you must observe the following items.

- **Using a razor blade and gasket scraper, remove all the old FIPG material from the gasket surfaces.**
- **Thoroughly clean all components to remove all the loose material.**
- **Clean both sealing surfaces with a non-residue solvent.**
- **Apply FIPG in an approx. 1 mm (0.04 in.) wide bead along the sealing surface.**
- **Parts must be assembled within 10 minutes of application. Otherwise, the FIPG material must be removed and reapplied.**

STEERING SYSTEM

SR01S-02

PRECAUTION

- **Care must be taken to replace parts properly because they could affect the performance of the steering system and result in a driving hazard.**
- **The CELICA is equipped with SRS (Supplemental Restraint System) such as the driver airbag and front passenger airbag. Failure to carry out service operation in the correct sequence could cause the SRS to unexpectedly deploy during servicing, possibly leading to a serious accident. Before servicing (including removal or installation of parts, inspection or replacement), be sure to read the precautionary notices in the RS section.**

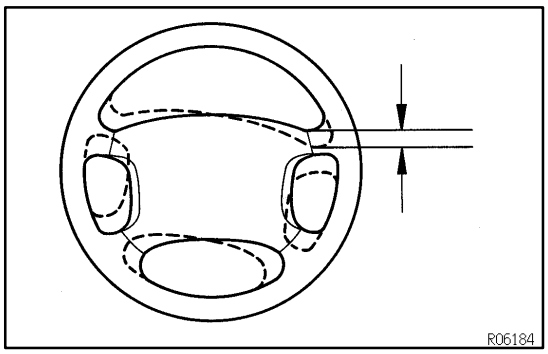

STEERING WHEEL

SR01Y-09

INSPECTION

1. CHECK STEERING WHEEL FREEPLAY

With the vehicle stopped and tires facing straight ahead, rock the steering wheel gently back and forth with light finger pressure.

Freeplay should not exceed the maximum.

Maximum freeplay: 30 mm (1.18 in.)

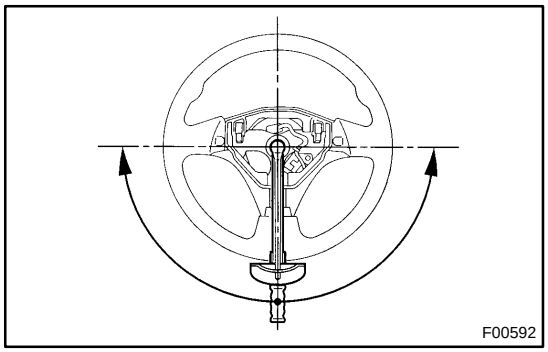

2. CHECK STEERING EFFORT

(a) Center the steering wheel.

(b) Remove the steering wheel pad.
(See page SR-12)

(c) Start the engine and run it at idle.

(d) Measure the steering effort in both directions.

Reference: 6.9 N·m (70 kgf·cm, 61 in.·lbf)

HINT:

Be sure to consider the tire type, pressure and contact surface before making your diagnosis.

(e) Torque the steering wheel set nut.

Torque: 34 N·m (350 kgf·cm, 25 ft·lbf)

(f) Install the steering wheel pad.
(See page SR-17)

DI50H-02

PRE-CHECK

1. DIAGNOSIS SYSTEM

(a) Description

- When troubleshooting OBD II vehicles, the only difference from the usual troubleshooting procedure is that you connect to the vehicle the OBD II scan tool complying with SAE 1978 or TOYOTA hand-held tester, and read off various data output from the vehicle's ECM.
- OBD II regulations require that the vehicle's on-board computer lights up the Malfunction Indicator Lamp (MIL) on the instrument panel when the computer detects a malfunction in the computer itself or in drive system components which affect vehicle emissions. In addition to the MIL lighting up when a malfunction is detected, the applicable Diagnostic Trouble Codes (DTC) prescribed by SAE J2012 are recorded in the ECM memory (See page DI-14).

If the malfunction does not reoccur in 3 trips, the MIL goes off but the DTCs remain recorded in the ECM memory.

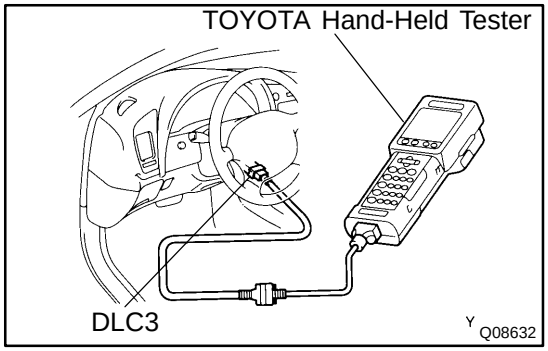

- To check the DTCs, connect the OBD II scan tool or TOYOTA hand-held tester to Data Link Connector 3 (DLC3) on the vehicle. The OBD II scan tool or TOYOTA hand-held tester also enables you to erase the DTCs and check freezed frame data and various forms of engine data (For operating instructions, see the OBD II scan tool's instruction book.).
- DTCs include SAE controlled codes and Manufacturer controlled codes. SAE controlled codes must be set as prescribed by the SAE, while Manufacturer controlled codes can be set freely by the manufacturer within the prescribed limits (See DTC chart on page DI-14).

- The diagnosis system operates in normal mode during normal vehicle use. It also has a check mode for technicians to simulate malfunction symptoms and troubleshoot. Most DTCs use 2 trip detection logic* to prevent erroneous detection, and ensure thorough malfunction detection. By switching the ECM to check mode when troubleshooting, the technician can cause the MIL to light up for a malfunction that is only detected once or momentarily (TOYOTA hand-held tester only) (See page DI-3).
- *2 trip detection logic:
  When a logic malfunction is first detected, the malfunction is temporarily stored in the ECM memory. If the same malfunction is detected again during the second drive test, this second detection causes the MIL to light up.
- The 2 trip repeats the same mode a 2nd time (However, the IG switch must be turned OFF between the 1st trip and 2nd trip.).
- Freeze frame data:
  Freeze frame data records the engine condition when a misfire (DTC P0300 - P0304) or fuel trim malfunction (DTC P0171, P0172) or other malfunction (first malfunction only), is detected.
- Because freeze frame data records the engine conditions (fuel system, calculator load, engine coolant temperature, fuel trim, engine speed, vehicle speed, etc.) when the malfunction is detected, when troubleshooting it is useful for determining whether the vehicle was running or stopped, the engine warmed up or not, the air-fuel ratio lean or rich, etc. at the time of the malfunction.

Priorities for troubleshooting:

If troubleshooting priorities for multiple DTCs are given in the applicable diagnostic chart, these should be followed.

If no instructions are given troubleshoot DTCs according to the following priorities.

(1) DTCs other than fuel trim malfunction (DTC P0171, P0172), EGR (DTC P0401, P0402), and misfire (DTC P0300 - P0304).

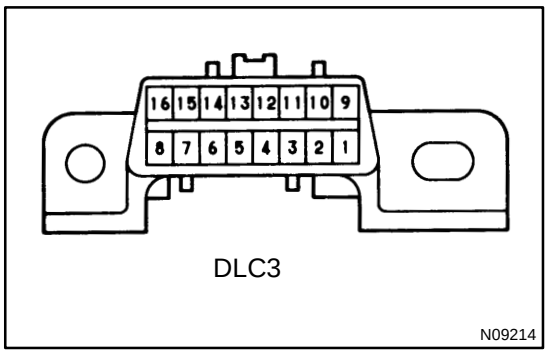

(2) Fuel trim malfunction (DTC P0171, P0172), and EGR (DTC P0401, P0402).
(3) Misfire (DTC P0300 - P0304).

(b) Check the DLC3.

The vehicle's ECM uses V.P.W. (Variable Pulse Width) for communication, to comply with SAE J1850. The terminal arrangement of DLC3 complies with SAE J1962 and matches the V.P.W. format.

Terminal No.	Connection / Voltage or Resistance	Condition
2	Bus ⊕ Line / Pulse generation	During transmission
4	Chassis Ground / ↔ Body Ground 1 Ω or less	Always
5	Signal Ground / ↔ Body Ground 1 Ω or less	Always
16	Battery Positive / ↔ Body Ground 9 - 14 V	Always

HINT:

If your display shows "UNABLE TO CONNECT TO VEHICLE" when you have connected the cable of the OBD II scan tool or TOYOTA hand-held tester to DLC3, turned the ignition switch ON and operated the scan tool, there is a problem on the vehicle side or tool side.

- If communication is normal when the tool is connected to another vehicle, inspect DLC3 on the original vehicle.
- If communication is still not possible when the tool is connected to another vehicle, the problem is probably in the tool itself, so consult the Service Department listed in the tool's instruction manual.

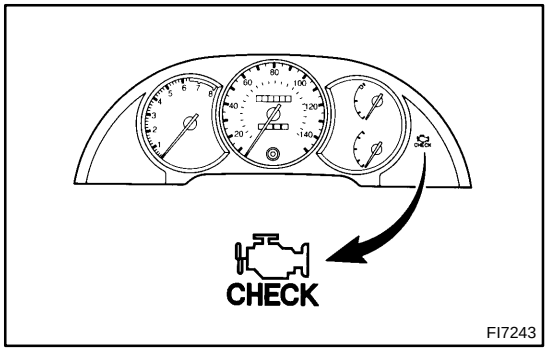

2. INSPECT DIAGNOSIS (Normal Mode)

(a) Check the MIL.

(1) The MIL comes on when the ignition switch is turned ON and the engine is not running.

HINT:

If the MIL does not light up, troubleshoot the combination meter.

(2) When the engine started, the MIL should go off. If the lamp remains on, the diagnosis system has detected a malfunction or abnormality in the system

(b) Check the DTC.

NOTICE:

TOYOTA hand-held tester only: When the diagnosis system is switched from normal mode to check mode, it erases all DTCs and freezed frame data recorded in normal mode. So before switching modes, always check the DTCs and freezed frame data, and note them down.

(1) Prepare the OBD II scan tool (complying with SAE J 1978) or TOYOTA hand-held tester.

(2) Connect the OBD II scan tool or TOYOTA hand-held tester to DLC3 at the under of the instrument panel on driver side.
(3) Turn the ignition switch ON and turn the OBD II scan tool or TOYOTA hand-held tester switch ON.
(4) Use the OBD II scan tool or TOYOTA hand-held tester to check the DTCs and freezed frame data, note them down. (For operating instructions, see the OBD II scan tool's instruction book.)
(5) See page DI-14 to confirm the details of the DTCs.

NOTICE:

When simulating symptoms with an OBD II scan tool (excluding TOYOTA hand-held tester) to check the DTCs, use normal mode. For codes on the DTC chart subject to "2 trip detection logic", turn the ignition switch OFF after the symptom is simulated the first time. Then repeat the simulation process again. When the problem has been simulated twice, the MIL lights up and the DTCs are recorded in the ECM.

3. INSPECT DIAGNOSIS (Check Mode)

HINT:

TOYOTA hand-held tester only:

Compared to the normal mode, the check mode has an increased sensitivity to detect malfunctions.

Furthermore, the same diagnostic items which are detected in the normal mode can also be detected in the check mode.

(a) Check the DTC.
(1) Initial conditions.
- Battery positive voltage 11V or more.
- Throttle valve fully closed.
- Transmission in park or neutral position.
- Air conditioning switched OFF.

(2) Turn ignition switch OFF.
(3) Prepare the TOYOTA hand-held tester.
(4) Connect the TOYOTA hand-held tester to DLC3 at the under of the instrument panel on driver side.
(5) Turn the ignition switch ON and push the TOYOTA hand-held tester main switch ON.

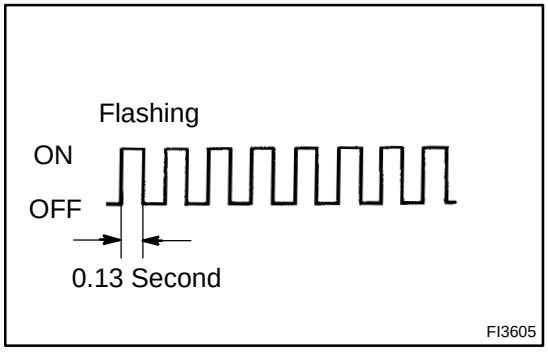

(6) Switch the TOYOTA hand-held tester normal mode to check mode (Check that the MIL flashes.).
(7) Switch the engine (The MIL goes out after the engine start.).
(8) Simulate the conditions of the malfunction described by the customer.

NOTICE:

Leave the ignition switch ON until you have checked the DTCs, etc.

(9) After simulating the malfunction conditions, use the TOYOTA hand-held tester diagnosis selector to check the DTCs and freezed frame data, etc.

HINT:

Take care not to turn the ignition switch OFF. Turning the ignition switch OFF switches the diagnosis system from check mode to normal mode, so all DTCs, etc. are erased.

(10) After checking the DTCs, inspect the applicable circuit.

(b) Clear the DTC.

The following actions will erase the DTCs and freezed frame data.

(1) Operating the OBD II scan tool (complying with SAE J1978) or TOYOTA hand-held tester to erase the codes. (See the OBD II scan tool's instruction book for operating instructions.)

(2) Disconnecting the battery terminals or EFI fuse.

NOTICE:

If the TOYOTA hand-held tester switches the ECM from normal mode to check mode or vice-versa, or if the ignition switch is turned from ON to ACC or OFF during check mode, the DTCs and freezed frame data will be erased.

4. FAIL-SAFE CHART

If any of the following codes is recorded, the ECM enters fail-safe mode.

DTC No.	Fail-Safe Operation	Fail-Safe Deactivation Conditions
P0105	Ignition timing fixed at 5° BTDC	Returned to normal condition
P0110	Intake air temp. is fixed at 20°C (68°F)	Returned to normal condition
P0115	Engine coolant temp. is fixed at 80°(176°F)	Returned to normal condition
P0120	VTA is fixed at 0°	The following condition must be repeated at least 2 times consecutively 0.1 V ≦ VTA ≦ 0.95 V
P0135 P0141	The heater circuit in witch an abnormality is detected is turned off	Ignition switch OFF
P0325	Max. timing retardation	Ignition switch OFF
P0336	Fuel cut	Returned to normal condition
P1135	The heater circuit in witch an abnormality is detected is turned off	Ignition switch OFF
P1300 P1310	Fuel cut	IGF signal is detected for 4 consecutive ignitions

5. CHECK FOR INTERMITTENT PROBLEMS

HINT:

TOYOTA hand-held tester only:

By putting the vehicle's ECM in check mode, 1 trip detection logic is possible instead of 2 trip detection logic and sensitivity to detect open circuits is increased. This makes it easier to detect intermittent problems.

(a) Clear the DTC (See step 3).

(b) Set the check mode (See step 3).

(c) Perform a simulation test (See page IN-18).

(d) Check the connector and terminal (See page IN-28).

(e) Handle the connector (See page IN-28).

6. BASIC INSPECTION

When the malfunction code is not confirmed in the DTC check, troubleshooting should be performed in the order for all possible circuits to be considered as the causes of the problems. In many cases, by carrying out the basic engine check shown in the following flow chart, the location causing the problem can be found quickly and efficiently. Therefore, use of this check is essential in engine troubleshooting.

1	**Is battery positive voltage 11 V or more when engine is stopped?**

NO → **Charge or replace battery.**

YES

2	**Is engine cranked?**

NO → **Proceed to page ST-2 and continue to trouble-shoot.**

YES

3	**Does engine start?**

NO → **Go to step 7.**

YES

4	**Check air filter.**

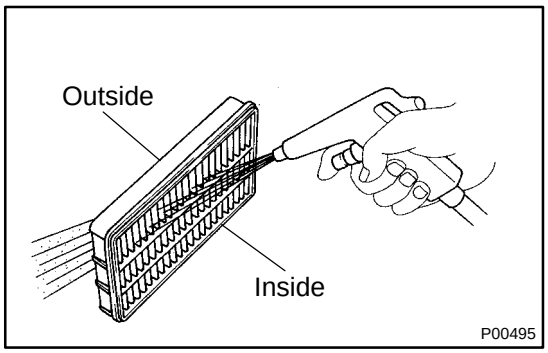

PREPARATION:
Remove the air filter.
CHECK:
Visual check that the air cleaner element is not excessive dirty or oily.
HINT:
If necessary, clean with compressed air. First blow from inside thoroughly, then blow from outside of element.

NG → **Repair or replace.**

OK

5	**Check idle speed.**

PREPARATION:
(a) Warm up engine to normal operating temperature.
(b) Switch off all accessories.
(c) Switch off air conditioning.
(d) Shift transmission into ”N” position.
(e) Connect the OBD II scan tool or TOYOTA hand-held tester to DLC3 on the vehicle.

CHECK:
Use CURRENT DATA to check the engine idle speed.

OK:
Idle speed: 650 - 750 rpm

NG → **Proceed to matrix chart of problem symptoms on page DI-20 .**

OK

6	Check ignition timing.

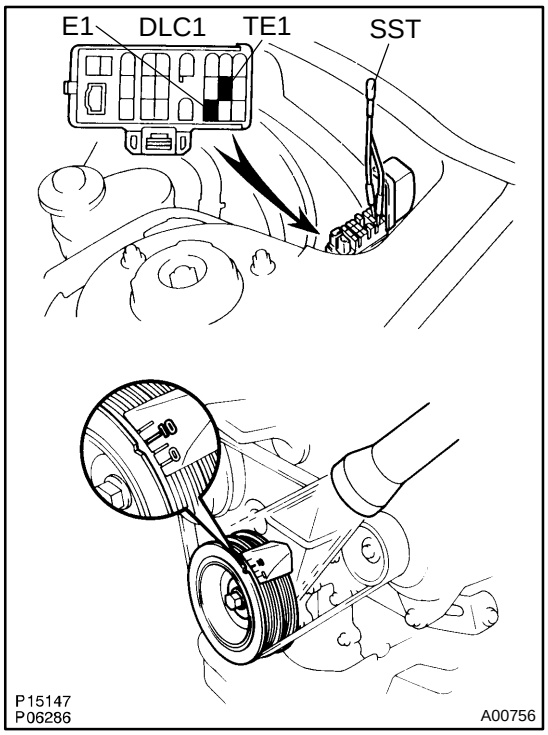

PREPARATION:

(a) Warm up engine to normal operating temperature.
(b) Shift transmission into ”N” position.
(c) Keep the engine speed at idle.
(d) Using SST, connect terminals TE1 and E1 of DLC1.
SST 09843-18020
(e) Using a timing light, connect the tester to No.1 high-tension cord.

CHECK:

Check ignition timing.

OK:

Ignition timing: 10˚ BTDC at idle

NG → **Proceed to page IG-1 and continue to troubleshoot.**

OK

Proceed to matrix chart of problem symptoms on page DI-20 .

7	Check fuel pressure.

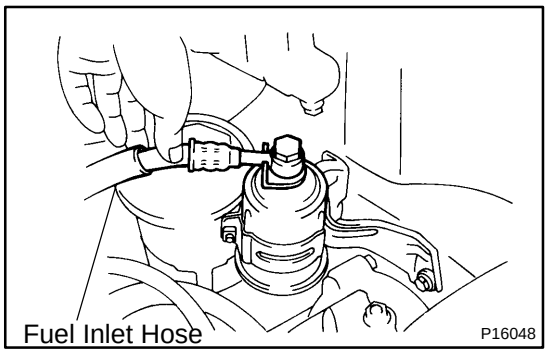

PREPARATION:

(a) Be sure that enough fuel is in the tank.
(b) Turn ignition switch ON.
(c) Connect the TOYOTA hand-held tester to the DLC3 on the vehicle.
(d) Use ACTIVE TEST mode to operate the fuel pump.
(e) If you have no TOYOTA hand-held tester, connect the positive (+) and negative (-) leads from the battery to the fuel pump connector (See page SF-5).

CHECK:

Check for fuel pressure in the fuel inlet hose when it is pinched off.

HINT:

At this time, you will hear a fuel flowing noise.

NG → **Proceed to page SF-5 and continue to trouble-shoot.**

OK

8	Check for spark.

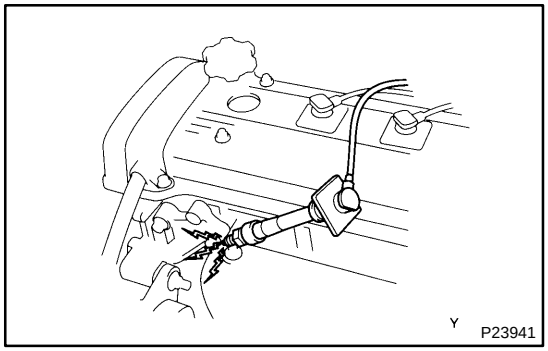

PREPARATION:

(a) Disconnect the high-tension cord from spark plug.
(b) Remove spark plug.
(c) Install the spark plug to high-tension cord.
(d) Disconnect injector connector.
(e) Ground the spark plug.

CHECK:

Check if spark occurs while engine is being cranked.

NOTICE:

To prevent excess fuel being injected from the injectors during this test, don't crank the engine for more than 5 - 10 seconds at a time.

NG → **Proceed to page IG-1 and continue to trouble-shoot.**

OK

Proceed to matrix chart of problem symptoms on page DI-20 .

7. ENGINE OPERATING CONDITION

NOTICE:

The values given below for "Normal Condition" are representative values, so a vehicle may still be normal even if its value varies from those listed here. So do not decide whether a part is faulty or not solely according to the "Normal Condition" here.

(a) CARB mandated signals.

TOYOTA hand-held tester display	Measurement Item	Normal Condition*
FUEL SYS #1	Fuel System Bank 1 OPEN: Air-fuel ratio feedback stopped CLOSED: Air-fuel ratio feedback operating	Idling after warming up: CLOSED
CALC LOAD	Calculator Load: Current intake air volume as a proportion of max. intake air volume	Idling: 19.7 - 49.3 % Racing without load (2,500rpm): 16.8 - 47.4 %
COOLANT TEMP.	Engine Coolant Temp. Sensor Value	After warming up: 80 - 95°C (176 ~ 203°F)
SHORT FT #1	Short-term Fuel Trim Bank 1	0 ± 20%
LONG FT #1	Long-term Fuel Trim Bank 1	0 ± 20%
ENGINE SPD	Engine Speed (A/C OFF)	Idling: 650 - 750 rpm
VEHICLE SPD	Vehicle Speed	Vehicle Stopped: 0 km/h (0 mph)
IGN ADVANCE	Ignition Advance: Ignition Timing of Cylinder No. 1	Idling: BTDC 8 - 18°
INTAKE AIR	Intake Air Temp. Sensor Value	Equivalent to Ambient Temp.
MAP	Absolute Pressure inside Intake Manifold	Idling: 20 ~ 50 kPa Racing without load (2,500 rpm): 17 - 48 kPa
THROTTLE POS	Voltage Output of Throttle Position Sensor Calculated as a percentage: 0 V → 0%, 5 V → 100%	Throttle Fully Closed: 6 - 16 % Throttle Fully Open: 64 - 98 %
O2S B1, S1	Voltage Output of Oxygen Sensor Bank 1, Sensor 1	Idling: 0.1 - 0.9 V
O2FT B1, S1	Oxygen Sensor Fuel Trim Bank 1, Sensor 1 (Same as SHORT FT #1)	0 ± 20 %
O2S B1, S2	Voltage Output of Heated Oxygen Sensor Bank 1, Sensor 2	Driving at 50 km/h (31 mph): 0.1 - 0.9 V

*: If no conditions are specifically stated for "Idling", it means the shift lever is at N or P position, the A/C switch is OFF and all accessory switches are OFF.

(b) TOYOTA Enhanced Signals.

TOYOTA hand-held tester display	Measurement Item	Normal Condition*
MISFIRE RPM	Engine RPM for first misfire range	Misfire 0: 0 RPM
MISFIRE LOAD	Engine load for first misfire range	Misfire 0: 0 g/r
INJECTOR	Fuel injection time for cylinder No.1	Idling: 2.2 - 4.8 ms
IAC DUTY RATIO	Intake Air Control Valve Duty Ratio Opening ratio rotary solenoid type IAC valve	Idling: 27 - 47 %
STARTER SIG	Starter Signal	Cranking: ON
A/C SIG	A/C Switch Signal	A/C ON: ON
PNP SW	Park/Neutral Position Switch Signal	P or N position: ON
STOP LIGHT SW	Stop Light Switch Signal	Stop light switch ON: ON
FC IDL	Fuel Cut Idle: Fuel cut when throttle valve fully closed, during deceleration	Fuel cut operating: ON
FC TAU	Fuel Cut TAU: Fuel cut during very light load	Fuel cut operating: ON
CYL#1, CYL#2, CYL#3, CYL#4	Abnormal revolution variation for each cylinder	0%
IGNITION	Total number of ignition for every 1,000 revolutions	0 - 2,000 rpm
EGR SYSTEM	EGR system operating condition	Idling: OFF
FUEL PUMP	Fuel Pump Signal	Idling: ON
TOTAL FT B1	Total Fuel Trim Bank 1: Average value for fuel trim system of bank 1	Idling: 0.8 - 1.2 V
O2 LR B1, S1 *2	Oxygen Sensor Lean Rich Bank 1, Sensor 1 Response time for oxygen sensor output to switch from lean to rich	Idling after warmed up: 0 - 1,000 msec.
O2 RL B1, S1 *2	Oxygen Sensor Rich Lean Bank 1, Sensor 1 Response time for oxygen sensor output to switch from rich to lean	Idling after warmed up: 0 - 1,000 msec.

*: If no conditions are specifically stated for ”Idling”, it means the shift lever is at N or P position, the A/C switch is OFF and all accessory switches are OFF.

DI54K-01

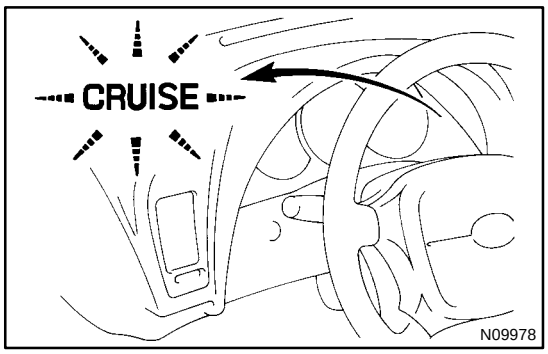

PRE-CHECK

1. DIAGNOSIS SYSTEM

(a) Check the indicator.

(1) Turn the ignition switch to ON.

(2) Check that the CRUISE MAIN indicator light comes on when the cruise control main switch is turned ON, and that the indicator light goes off when the main switch is turned OFF.

HINT:

If the indicator check result is not normal, proceed to trouble-shooting (See page BE-37) for the combination meter section.

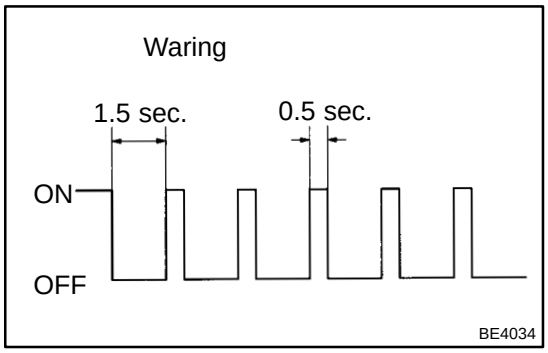

(b) Check the DTC.

HINT:

If a malfunction occurs in the No. 1 vehicle speed sensors or actuator, etc. during cruise control driving, the ECU actuates AUTO CANCEL of the cruise control and blinks the CRUISE MAIN indicator light to inform the driver of a malfunction. At the same time, the malfunction is stored in memory as a DTC.

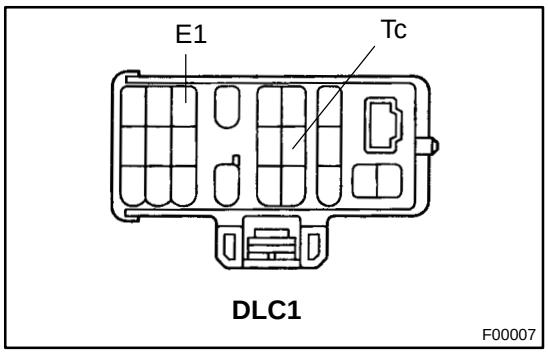

(c) Using diagnosis check wire, check the output of DTC.

(1) Turn the ignition switch to ON.

(2) Using SST, connect terminals Tc and E_1 of DLC1.

SST 09843-18020

(3) Read the DTC on the CRUISE MAIN indicator light.

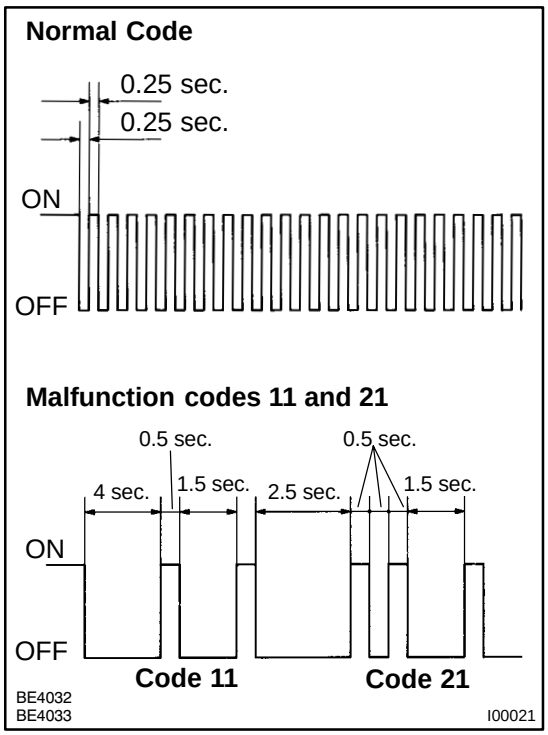

HINT:

- If the DTC is not output, inspect the Tc circuit (See page DI-460).
- As an example, the blinking patterns for codes; normal, 11 and 21 are shown in the illustration.
  (4) Check for the problem using the DTC table on the next page.
  (5) After completing the check, disconnect terminals Tc and E1, and turn off the display.

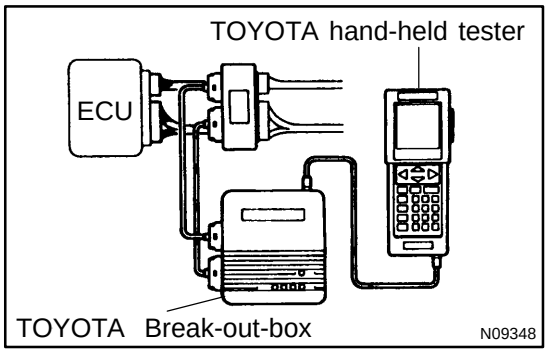

2. ECU TERMINAL VALUES MEASUREMENT USING TOYOTA BREAK-OUT-BOX AND TOYOTA HAND-HELD TESTER

(a) Hook up the TOYOTA break- out- box and TOYOTA hand-held tester to the vehicle.

(b) Read the ECU input/output values by following the prompts on the scan tool screen.

HINT:

TOYOTA hand-held tester has a ”Snapshot” function.

This records the measured values and is effective in the diagnosis of intermittent problems.

Please refer to the TOYOTA hand-held tester/TOYOTA break-out-box operator’s manual for further details.

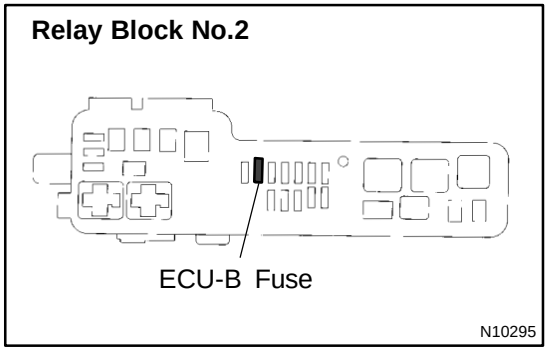

3. DTC CLEARANCE

(a) After completing repairs, the DTC retained in memory can be cleared by removing the ECU-B fuse for 10 seconds or more, with the ignition switch off.

(b) Check that the normal code is displayed after connecting the fuse.

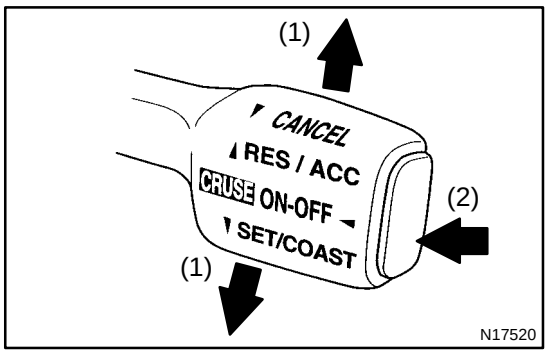

4. INPUT SIGNAL CHECK

HINT:

(1) For check No.1 - No.2
- Turn ignition switch ON.

(2) For check No.3
- Turn ignition switch ON.
- Shift to D position. (A/T vehicle)

(3) For check No.4
- Jack up the vehicle.
- Start the engine.
- Shift to D position. (A/T vehicle)

(a) Press the control switch to SET/COAST or RES/ACC position and hold it down or hold it up ”1”.

(b) Push the main switch ON ”2”.

(c) Check that the CRUISE MAIN indicator light blinks twice or 3 times repeatedly after 3 seconds.

(d) Turn the SET/COAST or RES/ACC switch OFF.

(e) Operate each switch as listed in the table below.

(f) Read the blinking pattern of the CRUISE MAIN indicator light.

(g) After performing the check, turn the main switch OFF.

HINT:

When 2 or more signals are input to the ECU, the lowest numbered code will be displayed first.

No.	Operation Method	CRUISE MAIN Indicator Light Blinking Pattern	Diagnosis
1	Turn SET/COAST switch ON	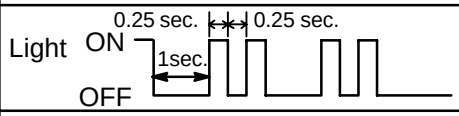	SET/COAST switch circuit is normal
2	Turn RES/ACC switch ON		RES/ACC switch circuit is normal
3	Turn CANCEL switch ON	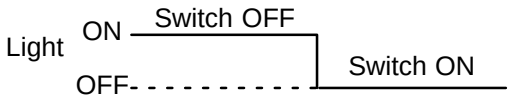	CANCEL switch circuit is normal
	Turn stop light switch ON (Depress brake pedal)		Stop light switch circuit is normal
	Turn park/neutral position switch OFF (Shift to except D position)	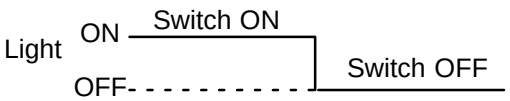	Park/neutral position switch circuit is normal
	Turn clutch switch OFF (Depress clutch pedal)		Clutch switch circuit is normal
4	Drive at about 40 km/h (25 mph)or higher		Vehicle Speed Sensor is normal
	Drive at about 40 km/h (25 mph) or below	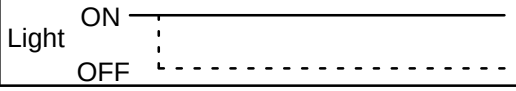	

DI51K-01

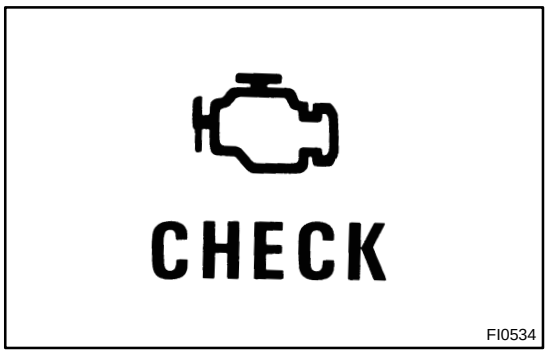

PRE-CHECK

1. DIAGNOSIS SYSTEM

(a) Description

- When troubleshooting OBD II vehicles, the only difference from the usual troubleshooting procedure is that you connect to the vehicle the OBD II scan tool complying with SAE 1978 or TOYOTA hand-held tester, and read off various data output from the vehicle's ECM.
- OBD II regulations require that the vehicle's on-board computer lights up the Malfunction Indicator Lamp (MIL) on the instrument panel when the computer detects a malfunction in the computer itself or in drive system components which affect vehicle emissions. In addition to the MIL lighting up when a malfunction is detected, the applicable Diagnostic Trouble Code (DTC) prescribed by SAE J2012 are recorded in the ECM memory (See page DI-121).

If the malfunction does not reoccur in 3 trips, the MIL goes off but the DTCs remain recorded in the ECM memory.

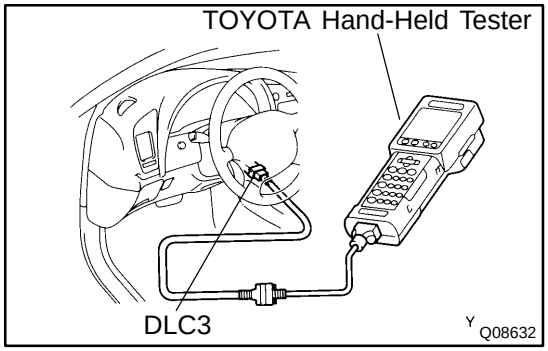

- To check the DTCs, connect the OBD II scan tool or TOYOTA hand-held tester to Data Link Connector 3 (DLC3) on the vehicle. The OBD II scan tool or TOYOTA hand-held tester also enables you to erase the DTCs and check freezed frame data and various forms of engine data (For operating instructions, see the OBD II scan tool's instruction book.).
- DTC include SAE controlled codes and Manufacturer controlled codes. SAE controlled codes must be set as prescribed by the SAE, while Manufacturer controlled codes can be set freely by the manufacturer within the prescribed limits (See DTC chart on page DI-121).

- The diagnosis system operates in normal mode during normal vehicle use. It also has a check mode for technicians to simulate malfunction symptoms and troubleshoot. Most DTCs use 2 trip detection logic* to prevent erroneous detection and ensure thorough malfunction detection. By switching the ECM to check mode when troubleshooting, the technician can cause the MIL to light up for a malfunction that is only detected once or momentarily (TOYOTA hand-held tester only) (See page DI-1 10).
- *2 trip detection logic:
  When a logic malfunction is first detected, the malfunction is temporarily stored in the ECM memory. If the same malfunction is detected again during the second drive test, this second detection causes the MIL to light up.
- The 2 trip repeats the same mode a 2nd time (However, the IG switch must be turned OFF between the 1st trip and 2nd trip.).
- Freeze frame data:
  Freeze frame data records the engine condition when a misfire (DTC P0300 - P0304) or fuel trim malfunction (DTC P0171, P0172) or other malfunction (first malfunction only), is detected.
- Because freeze frame data records the engine conditions (fuel system, calculator load, engine coolant temperature, fuel trim, engine speed, vehicle speed, etc.) when the malfunction is detected, when troubleshooting it is useful for determining whether the vehicle was running or stopped, the engine warmed up or not, the air-fuel ratio lean or rich, etc. at the time of the malfunction.

Priorities for troubleshooting:

If troubleshooting priorities for multiple DTCs are given in the applicable diagnostic chart, these should be followed.

If no instructions are given, troubleshoot DTCs according to the following priorities.

(1) DTCs other than fuel trim malfunction (DTC P0171, P0172), EGR (DTC P0401, P0402), and misfire (DTC P0300 - P0304).

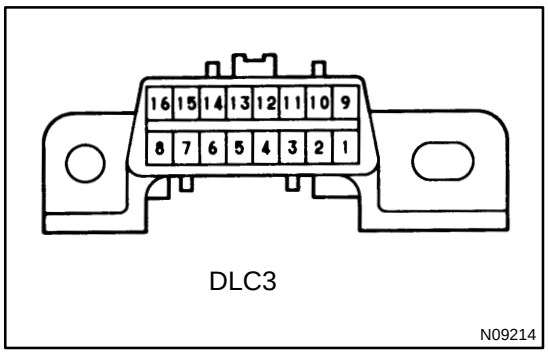

(2) Fuel trim malfunction (DTC P0171, P0172), and EGR (DTC P0401, P0402).
(3) Misfire (DTC P0300 - P0304).

(b) Check the DLC3.

The vehicle's ECM uses V.P.W. (Variable Pulse Width) for communication to comply with SAE J1850. The terminal arrangement of DLC3 complies with SAE J1962 and matches the V.P.W. format.

Terminal No.	Connection / Voltage or Resistance	Condition
2	Bus ⊕ Line / Pulse generation	During transmission
4	Chassis Ground / ↔ Body Ground 1 Ω or less	Always
5	Signal Ground / ↔ Body Ground 1 Ω or less	Always
16	Battery Positive / ↔ Body Ground 9 - 14 V	Always

HINT:

If your display shows "UNABLE TO CONNECT TO VEHICLE" when you have connected the cable of the OBD II scan tool or TOYOTA hand-held tester to DLC3, turned the ignition switch ON and operated the scan tool, there is a problem on the vehicle side or tool side.

- If communication is normal when the tool is connected to another vehicle, inspect DLC3 on the original vehicle.
- If communication is still not possible when the tool is connected to another vehicle, the problem is probably in the tool itself, so consult the Service Department listed in the tool's instruction manual.

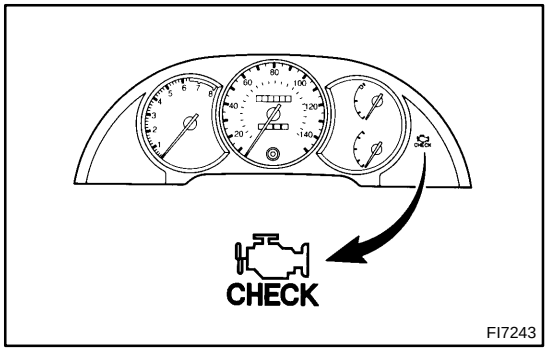

2. INSPECT DIAGNOSIS (Normal Mode)

(a) Check the MIL.

(1) The MIL comes on when the ignition switch is turned ON and the engine is not running.

HINT:

If the MIL does not light up, troubleshoot the combination meter.

(2) When the engine started, the MIL should go off. If the lamp remains on, the diagnosis system has detected a malfunction or abnormality in the system.

(b) Check the DTC.

NOTICE:

TOYOTA hand-held tester only: When the diagnosis system is switched from normal mode to check mode, it erases all DTCs and freezed frame data recorded in normal mode. So before switching modes, always check the DTCs and freezed frame data, and note them down

(1) Prepare the OBD II scan tool (complying with SAE J 1978) or TOYOTA hand-held tester.

(2) Connect the OBD II scan tool or TOYOTA hand-held tester to DLC3 at the under of the instrument panel on driver side.
(3) Turn the ignition switch ON and turn the OBD II scan tool or TOYOTA hand-held tester switch ON.
(4) Use the OBD II scan tool or TOYOTA hand-held tester to check the DTCs and freezed frame data, note them down. (For operating instructions, see the OBD II scan tool's instruction book.)
(5) See page DI-121 to confirm the details of the DTCs.

NOTICE:

When simulating symptoms with an OBD II scan tool (excluding TOYOTA hand-held tester) to check the DTCs, use normal mode. For code on the DTC chart subject to "2 trip detection logic", turn the ignition switch OFF after the symptom is simulated the first time. Then repeat the simulation process again. When the problem has been simulated twice, the MIL lights up and the DTCs are recorded in the ECM.

3. INSPECT DIAGNOSIS (Check Mode)

HINT:

TOYOTA hand-held tester only:

Compared to the normal mode, the check mode has an increased sensitivity to detect malfunctions.

Furthermore, the same diagnostic items which are detected in the normal mode can also be detected in the check mode.

(a) Check the DTC.
(1) Initial conditions.
- Battery positive voltage 11 V or more.
- Throttle valve fully closed.
- Transmission in "park" or "neutral" position.
- Air conditioning switched OFF.

(2) Turn ignition switch OFF.
(3) Prepare the TOYOTA hand-held tester.
(4) Connect the TOYOTA hand-held tester to DLC3 at the under of the instrument panel on driver side.

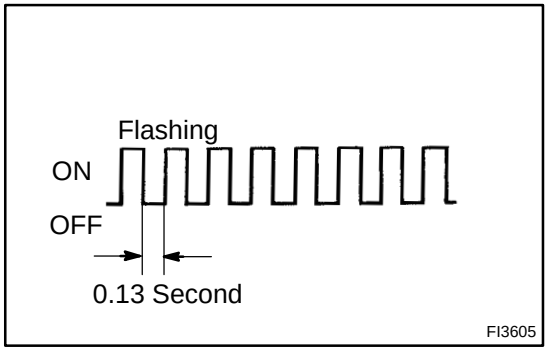

(5) Turn the ignition switch ON and push the TOYOTA hand-held tester main switch ON.
(6) Switch the TOYOTA hand-held tester normal mode to check mode (Check that the MIL flashes.).
(7) Start the engine (The MIL goes out after the engine start.).
(8) Simulate the conditions of the malfunction described by the customer.

NOTICE:
Leave the ignition switch ON until you have checked the DTCs, etc.

(9) After simulating the malfunction conditions, use the TOYOTA hand-held tester diagnosis selector to check the DTCs and freezed frame data, etc.

HINT:
Take care not to turn the ignition switch OFF. Turning the ignition switch OFF switches the diagnosis system from check mode to normal mode, so all DTCs, etc. are erased.

(10) After checking the DTCs, inspect the applicable circuit.

(b) Clear the DTC.

The following actions will erase the DTCs and freezed frame data.

(1) Operating the OBD II scan tool (complying with SAE J1978) or TOYOTA hand-held tester to erase the codes. (See the OBD II scan tool's instruction book for operating instructions.)

(2) Disconnecting the battery terminals or EFI fuse.

NOTICE:
If the TOYOTA hand-held tester switches the ECM from normal mode to check mode or vice-versa, or if the ignition switch is turned from ON to ACC or OFF during check mode, the DTCs and freezed frame data will be erased.

4. FAIL-SAFE CHART

If any of the following codes is recorded, the ECM enters fail-safe mode.

DTC No.	Fail-Safe Operation	Fail-Safe Deactivation Conditions
P0105	Ignition timing fixed at 5° BTDC	Returned to normal condition
P0110	Intake air temp. is fixed at 20°C (68°F)	Returned to normal condition
P0115	Engine coolant temp. is fixed at 80°(176°F)	Returned to normal condition
P0120	VTA is fixed at 0°	The following condition must be repeated at least 2 times consecutively When closed throttle position switch is ON: 0.1 V ≦ VTA ≦ 0.95 V
P0325	Max. timing retardation	Ignition switch OFF
P1300	Fuel cut	IGF signal is detected for 4 consecutive ignitions

5. CHECK FOR INTERMITTENT PROBLEMS

HINT:
TOYOTA hand-held tester only:
By putting the vehicle's ECM in check mode, 1 trip detection logic is possible instead of 2 trip detection logic and sensitivity to detect open circuits is increased. This makes it easier to detect intermittent problems.

(a) Clear the DTC (See step 3).
(b) Set the check mode (See step 3).
(c) Perform a simulation test (See page IN-18).
(d) Check the connector and terminal (See page IN-18).
(e) Handle the connector (See page IN-18).

6. BASIC INSPECTION

When the Malfunction code is not confirmed in the DTC check, troubleshooting should be performed in the order for all possible circuits to be considered as the causes of the problems. In many cases, by carrying out the basic engine check shown in the following flow chart, the location causing the problem can be found quickly and efficiently. Therefore, use of this check is essential in engine troubleshooting.

1	**Is battery positive voltage 11 V or more when engine is stopped?**

NO → **Charge or replace battery.**

YES

2	**Is engine cranked?**

NO → **Proceed to page ST-18 and continue to trouble-shoot.**

YES

3	**Does engine start?**

NO → **Go to step 7.**

YES

4	Check air filter.

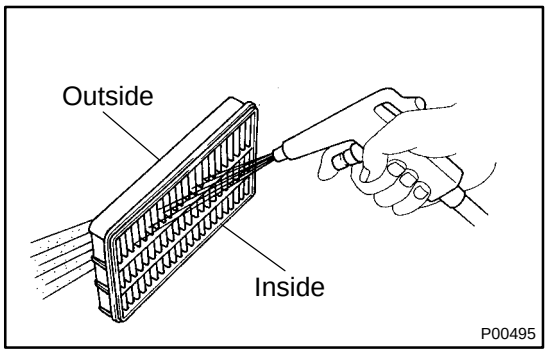

PREPARATION:
Remove air filter.
CHECK:
Visual check that the air cleaner element is not dirty or excessive oily.
HINT:
If necessary, clean element with compressed air. First blow from inside thoroughly, then blow from outside of element.

NG → **Repair or replace.**

OK

5	Check idle speed.

PREPARATION:
(a) Warm up engine to normal operating temperature.
(b) Switch off all accessories.
(c) Switch off air conditioning.
(d) Shift transmission into ”N” position.
(e) Connect the OBD II scan tool or TOYOTA hand-held tester to DLC3 on the vehicle.

CHECK:
Use CURRENT DATA to check the engine idle speed.

OK:
Idle speed: 700 - 800 rpm

NG → **Proceed to matrix chart of problem symptoms on page DI-127 .**

OK

6	Check ignition timing.

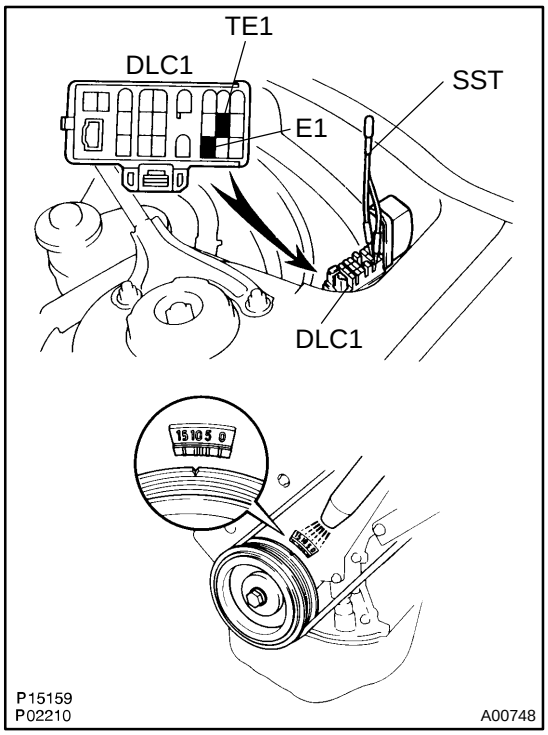

PREPARATION:

(a) Warm up engine to normal operating temperature.
(b) Shift transmission into ”N” position.
(c) Keep the engine speed at idle.
(d) Using SST, connect terminals TE1 and E1 of DLC1.
SST 09843-18020
(e) Using a timing light, connect the tester to No.1 high-tension cord.

CHECK:

Check ignition timing.

OK:

Ignition timing: 10˚ BTDC at idle

NG → **Proceed to page IG-1 and continue to troubleshoot.**

OK

Proceed to matrix chart of problem symptoms on page DI-127 .

7	Check fuel pressure.

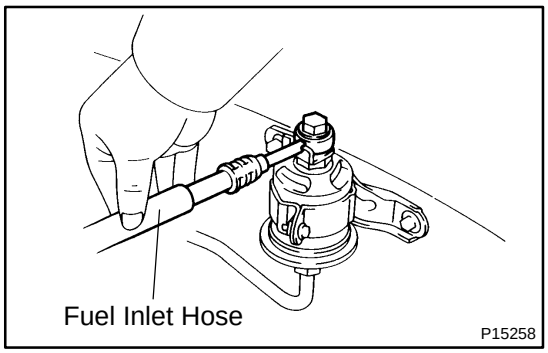

PREPARATION:

(a) Be sure that enough fuel is in the tank.
(b) Turn ignition switch ON.
(c) Connect the TOYOTA hand-held tester to the DLC3 on the vehicle.
(d) Use ACTIVE TEST mode to operate the fuel pump.
(e) If you have no TOYOTA hand-held tester, connect the positive (+) and negative (-) leads from the battery to the fuel pump connector (See page SF-6).

CHECK:

Check for fuel pressure in the inlet hose when it is pinched off.
HINT:
At this time, you will hear a fuel flowing noise.

NG → **Proceed to page SF-6 and continue to trouble-shoot.**

OK

8	Check for spark.

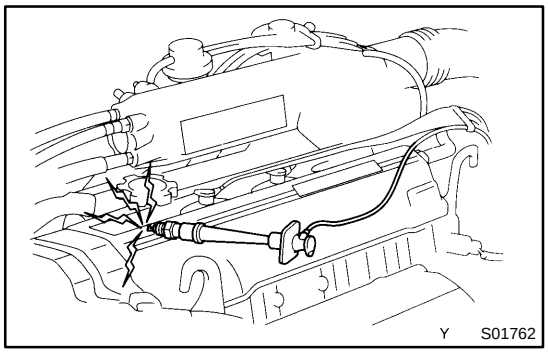

PREPARATION:

(a) Disconnect the high-tension cord from spark plug.
(b) Remove spark plug.
(c) Install the spark plug to high-tension cord.
(d) Disconnect the injector connector.
(e) Ground the spark plug.

CHECK:

Check if spark occurs while engine is being cranked.

NOTICE:

To prevent excess fuel being injected from the injectors during this test, don't crank the engine for more than 5 - 10 seconds at a time.

NG → **Proceed to page IG-1 and continue to trouble-shoot.**

OK

Proceed to matrix chart of problem systems on page DI-127 .

7. ENGINE OPERATING CONDITION

NOTICE:

The values given below for "Normal Condition" are representative values, so a vehicle may still be normal even if its value varies from those listed here. So do not decide whether a part is faulty or not solely according to the "Normal Condition" here.

(a) CARB mandated signals.

TOYOTA hand-held tester display	Measurement Item	Normal Condition*
FUEL SYS #1	Fuel System Bank 1 OPEN: Air-fuel ratio feedback stopped CLOSED: Air-fuel ratio feedback operating	Idling after warming up: CLOSED
CALC LOAD	Calculator Load: Current intake air volume as a proportion of max. intake air volume	Idling: 19.7 - 50.3 % Racing without load (2,500rpm): 16.8 - 47.4 %
COOLANT TEMP.	Engine Coolant Temp. Sensor Value	After warming up: 80 - 95˚C (176 - 203˚F)
SHORT FT #1	Short-term Fuel Trim Bank 1	0 ± 20%
LONG FT #1	Long-term Fuel Trim Bank 1	0 ± 20%
ENGINE SPD	Engine Speed	Idling: 700 - 800 rpm
VEHICLE SPD	Vehicle Speed	Vehicle Stopped: 0 km/h (0 mph)
IGN ADVANCE	Ignition Advance: Ignition Timing of Cylinder No. 1	Idling: BTDC 0 - 10˚
INTAKE AIR	Intake Air Temp. Sensor Value	Equivalent to Ambient Temp.
MAP	Absolute Pressure inside Intake Manifold	Idling: 20 - 51 kPa Racing without load (2,500 rpm): 17 - 48 kPa
THROTTLE POS	Voltage Output of Throttle Position Sensor Calculated as a percentage: 0 V → 0%, 5 V → 100%	Throttle Fully Closed: 6 - 16 % Throttle Fully Open: 64 - 98 %
O2S B1, S1	Voltage Output of Oxygen Sensor Bank 1, Sensor 1	Idling: 0.1 - 0.9 V
O2FT B1, S1	Oxygen Sensor Fuel Trim Bank 1, Sensor 1 (Same as SHORT FT #1)	0 ± 20 %
O2S B1, S2	Voltage Output of Oxygen Sensor Bank 1, Sensor 2	Driving at 50 km/h (31 mph): 0.1 - 0.9 V

*: If no conditions are specifically stated for "Idling", it means the shift lever is at N or P position, the A/C switch is OFF and all accessory switches are OFF.

(b) TOYOTA Enhanced Signals.

TOYOTA hand-held tester display	Measurement Item	Normal Condition*
MISFIRE RPM	Engine RPM for first misfire range	Misfire 0: 0 rpm
MISFIRE LOAD	Engine load for first misfire range	Misfire 0: 9 g/r
INJECTOR	Fuel injection time for cylinder No.1	Idling: 2.9 - 5.1 ms
IAC DUTY RATIO	Intake Air Control Valve Duty Ratio Opening ratio rotary solenoid type IAC valve	Idling: 25 - 60 %
STARTER SIG	Starter Signal	Cranking: ON
A/C SIG	A/C Switch Signal	A/C ON: ON
PNP SIG	Park/Neutral Position Switch Signal	P or N position: ON
ELCTRCL LOAD SIG	Electrical Load Signal	Defogger S/W ON: ON
STOP LIGHT SW	Stop Light Switch Signal	Stop light switch ON: ON
FC IDL	Fuel Cut Idle: Fuel cut when throttle valve fully closed, during deceleration	Fuel cut operating: ON
FC TAU	Fuel Cut TAU: Fuel cut during very light load	Fuel cut operating: ON
CYL#1, CYL#2, CYL#3, CYL#4	Abnormal revolution variation for each cylinder	0%
IGNITION	Total number of ignitions for every 1,000 revolutions	0 - 2,000 rpm
EGR SYSTEM	EGR system operating condition	Idling: OFF
FUEL PUMP	Fuel Pump Signal	Idling: ON
A/C CUT SIG	A/C Cut Signal	A/C S/W OFF: ON
TOTAL FT B1	Total Fuel Trim Bank 1: Average value for fuel trim system of bank 1	Idling: 0.8 - 1.2 V
O2 LR B1, S1	Oxygen Sensor Lean Rich Bank 1, Sensor 1 Response time for oxygen sensor output to switch from lean to rich	Idling after warmed up: 0 - 1,000 msec.
O2 RL B1, S1	Oxygen Sensor Rich Lean Bank 1, Sensor 1 Response time for oxygen sensor output to switch from rich to lean	Idling after warmed up: 0 - 1,000 msec.

*: If no conditions are specifically stated for ”Idling”, it means the shift lever is at N or P position, the A/C switch is OFF and all accessory switches are OFF.

DI52L-02

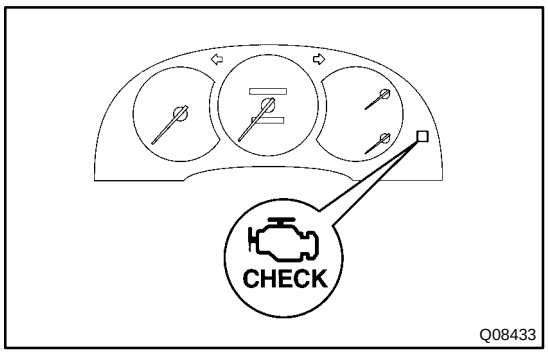

PRE-CHECK

1. DIAGNOSIS SYSTEM

(a) Description

- When troubleshooting OBD II vehicles, the only difference from the usual troubleshooting procedure is that you connect the OBD II scan tool complying with SAE J1978 or TOYOTA hand-held tester, to vehicle and read off various data output from the vehicle's ECM.
- OBD II regulations require that the vehicle's on-board computer lights up the Malfunction Indicator Lamp (MIL) on the instrument panel when the computer detects a malfunction in the computer itself or in drive system components which affect vehicle emissions. In addition to the MIL lighting up when a malfunction is detected, the applicable DTCs prescribed by SAE J2012 are recorded in the ECM memory (See page DI-121).

If the malfunction does not reoccur in 3 trips, the MIL goes off but the DTCs remain recorded in the ECM memory.

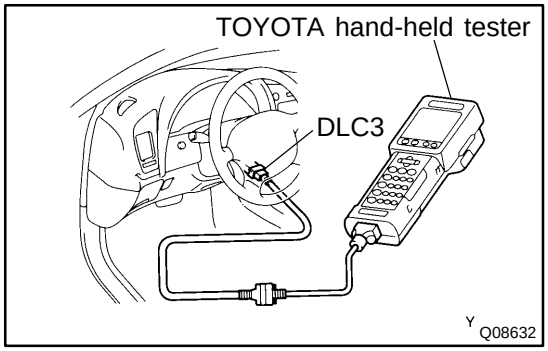

- To check the DTCs, connect the OBD II scan tool or TOYOTA hand-held tester to DLC3 on the vehicle. The OBD II scan tool or TOYOTA hand-held tester also enables you to erase the DTCs and check freezed frame data and various forms of engine data (For operating instructions, see the OBDII scan tool's instruction book).
- DTCs include SAE controlled codes and Manufacturer controlled codes.
- SAE controlled codes must be set as prescribed by the SAE, while Manufacturer controlled codes can be set freely by the manufacturer within the prescribed limits (See DTC chart on page DI-230).

- The diagnosis system operates in normal mode during normal vehicle use, and also has a check mode for technicians to simulate malfunction symptoms and perform troubleshooting. Most DTCs use 2 trip detection logic(*) to prevent erroneous detection. By switching the ECM to check mode when troubleshooting, the technician can cause the MIL to light up and for a malfunction that is only detected once or momentarily (TOYOTA hand-held tester) (See page DI-219).
- *2 trip detection logic:
  When a logic malfunction is first detected, the malfunction is temporarily stored in the ECM memory. If the same malfunction is detected again during the second test drive, this second detection causes the MIL to light up.

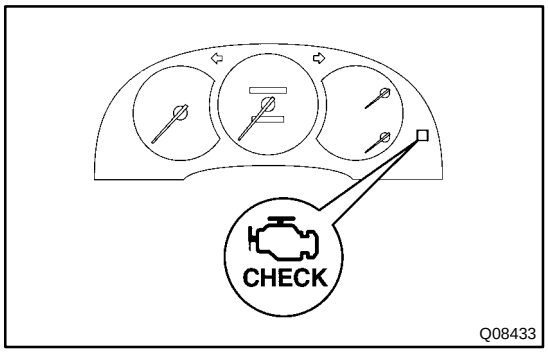

2. INSPECT DIAGNOSIS (Normal Mode)

(a) Check the MIL.

(1) The MIL lights up when the ignition switch is turned ON and the engine is not running.

HINT:

If the MIL does not light up, troubleshoot the combination meter (See page BE-38).

(2) When the engine is starts, the MIL should go off. If the lamp remains on, the diagnosis system has detected a malfunction or abnormality in the system.

(b) Check the DTC.

NOTICE:

TOYOTA hand-held tester only: When the diagnostic system is switched from normal mode to check mode, it erases all DTCs and freezed frame data recorded in normal mode. So before switching modes, always check the DTCs and freezed frame data, and note them down.

(1) Prepare the OBD II scan tool (complying with SAE J1978) or TOYOTA hand-held tester.

(2) Connect the OBD II scan tool or TOYOTA hand-held tester to DLC3 at the lower of the instrument panel.

(3) Turn the ignition switch ON and turn the OBD II scan tool or TOYOTA hand-held tester switch ON.

(4) Use the OBD II scan tool or TOYOTA hand-held tester to check the DTCs and freezed frame data. Note them down (For operating instructions, see the OBD II scan tool's instruction book).

(5) See page DI-230 to confirm the details of the DTCs.

NOTICE:

When simulating symptoms with an OBD II scan tool (excluding TOYOTA hand-held tester) to check the DTCs, use normal mode. For codes on the DTC chart subject to "2 trip detection logic", turn the ignition switch off after the symptoms have been simulated for the first time. Then repeat the simulation process again. When the program has been simulated twice, the MIL lights up and the DTCs are recorded in the ECM.

3. INSPECT DIAGNOSIS (Check mode)

HINT:

TOYOTA hand-held tester only:

Compared to the normal mode, the check mode has high sensing ability to detect malfunctions. Furthermore, the same diagnostic items which are detected in normal mode can also be detected in check mode.

(a) Check the DTC.

(1) Check the initial conditions.
- Battery positive voltage 11 V or more.
- Throttle valve fully closed.
- Transaxle in the PARK position.
- Air conditioning switched off.

(2) Turn the ignition switch OFF.

(3) Prepare a TOYOTA hand-held tester.

(4) Connect the TOYOTA hand-held tester to DLC3 at the lower of the instrument panel.

(5) Turn the ignition switch ON and switch the TOYOTA hand-held tester ON.

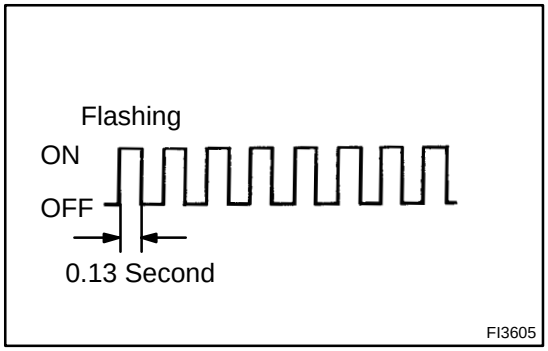

(6) Switch the TOYOTA hand-held tester from normal mode to check mode (Check that the MIL flashes).

(7) Start the engine (The MIL goes off after the engine starts).

(8) Simulate the conditions of the malfunction described by the customer.

NOTICE:

Leave the ignition switch ON until you have checked the DTCs, etc.

(9) After simulating the malfunction conditions, use the TOYOTA hand-held tester diagnosis selector to check the DTCs and freezed frame data, etc.

HINT:

Take care not to turn the ignition switch OFF. Turning the ignition switch off switches the diagnosis system from check mode to normal mode, so all DTCs, etc. are erased.

(10) After checking the DTC, inspect the applicable circuit.

(b) Clear the DTC.
The following actions will erase the DTCs and freezed frame data. Operating the OBD II scan tool (complying with SAE J1978) or TOYOTA hand-held tester to erase the codes (See the OBD II scan tool's instruction book for operating instructions.).

NOTICE:
If the TOYOTA hand-held tester switches the ECM from normal mode to check mode or vice-versa, or if the ignition switch is turned from ON to ACC or OFF during check mode, the DTCs and freezed frame data will be erased.

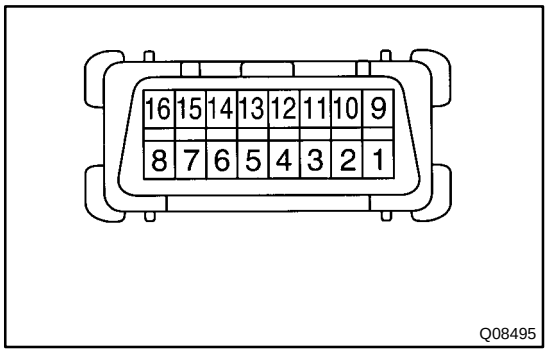

(c) Inspect the DLC3.
The vehicle's ECM uses V.P.W. (Variable Pulse Width) for communication to comply with SAE J1850. The terminal arrangement of DLC3 complies with SAE J1962 and matches the V.P.W. format.

Terminal No.	Connection / Voltage or Resistance	Condition
2	Bus ⊕ Line / Pulse generation	During transmission
4	Chassis Ground / ↔ Body / 1 Ω or less	Always
5	Signal Ground / ↔ Body / 1 Ω or less	Always
16	Battery Positive / ↔ Body / 1 Ω or less Battery Positive / ↔ Body / 9 - 14 V	Always

HINT:
If your display shows "UNABLE TO CONNECT TO VEHICLE" when you have connected the cable of the OBD II scan tool or TOYOTA hand-held tester to DLC3, turned the ignition switch ON and operated the scan tool, there is a problem on the vehicle side or tool side.

- If communication is normal when the tool is connected to another vehicle, inspect DLC3 on the original vehicle.
- If communication is still not possible when the tool is connected to another vehicle, the problem is probably in the tool itself, so consult the Service Department listed in the tool's instruction manual.

4. CHECK FOR INTERMITTENT PROBLEMS

HINT:

TOYOTA hand-held tester only:

By putting the vehicle's ECM in check mode, 1 trip detection logic is possible instead of 2 trip detection logic and sensitivity to detect open circuits is increased. This makes it easier to detect intermittent problems.

(a) Clear the DTC (See step 3).

(b) Set the check mode (See step 3).

(c) Perform a simulation test (See page IN-18).

(d) Check the connector and terminal (See page IN-28).

(e) Handle the connector (See page IN-28).

5. PROBLEM SYMPTOM CONFIRMATION

Taking into consideration the results of the customer problem analysis, try to reproduce the symptoms of the trouble. If the problem is that the transaxle does not up-shift, down-shift, or the shift point is too high or too low, conduct the following road test to confirm the automatic shift schedule and simulate the problem symptoms.

6. ROAD TEST

NOTICE:

Do the test at normal operating ATF temperature 50 - 80˚C (122 - 176 ˚F).

(a) D position test

Shift into the D position, keep the accelerator pedal contrast at the full throttle valve opening position and check the following points:

(1) Check up-shift operation.

Check that 1 → 2, 2 → 3 and 3 → O/D up-shift takes place, at the shift point shown in the automatic shift schedule. (See page SS-51)

HINT:

- O/D Gear Up-shift Prohibition Control

1. Engine coolant temparature is 50˚C (122˚F) or less. 2. If there is a 10 km/h (6 mph) difference between the set cruise control speed and vehicle speed. 3. O/D main switch is pushed ON (During the O/D OFF indicator light lights up).

- O/D Gear Lock-up Prohibition Control (1. Brake pedal is depressed. 2. Engine coolant temperature is 50˚C (122˚F) or less.

(2) Check for shift shock and slip.

Check for shock and slip at the 1 → 2, 2 → 3 and 3 → O/D up-shifts.

(3) Check for abnormal noise and vibration.

Run at the D position lock-up or O/D gear and check for abnormal noise and vibration.

HINT:

The check for the cause of abnormal noise and vibration must be performed very thoroughly as it could also be due to loss of balance in the torque converter clutch, etc.

(4) Check kick-down operation.

While running in the D position, 2nd, 3rd and O/D gears, check that the possible kick-down vehicle speed limits for 2 → 1, 3 → 2 and O/D → 3 kick-downs conform to those indicated on the automatic shift schedule (See page SS-51).

(5) Check abnormal shock and slip at kick-down.

(6) Check the lock-up mechanism.

- Drive in D position, O/D gear, at a steady speed (lock-up ON) of about 75 km/h (47 mph).
- Lightly depress the accelerator pedal and check that the RPM does not change abruptly.

If there is a big jump in RPM, there is no lock-up.

(b) 2 position test.

Shift into the 2 position and while driving with the accelerator pedal held constantly at the full throttle valve opening position and check on the following points:

(1) Check up-shift operation.
Check that the 1 → 2 up-shift takes place and that the shift point conforms to the automatic shift schedule (See page SS-51).

HINT:
There is no O/D up-shift and lock-up in the 2 position.

(2) Check engine braking.
While running in the and 2nd gear of the 2 position, release the accelerator pedal and check the engine braking effect.
(3) Check for abnormal noises during acceleration and deceleration, and for shock at up-shift and down-shift.

(c) L position test.
Shift into the L position and while driving with the accelerator pedal held constanty at the full throttle valve opening position, and check the following points:
(1) Check no up-shift.
While running in the L position, check that there is no up-shift to 2nd gear.
(2) Check engine braking.
While running in the L position, release the accelerator pedal and check the engine braking effect.
(3) Check for abnormal noises during acceleration and deceleration.

(d) R position test
Shift into the R position and while starting at full throttle, check for slipping.

CAUTION:
Before conducting this test ensure that the test area is free from personnel and obstruction.

(e) P position test
Stop the vehicle on a grade (more than 5˚) and after shifting into the P position, release the parking brake. Then check that the parking lock pawl holds the vehicle in place.

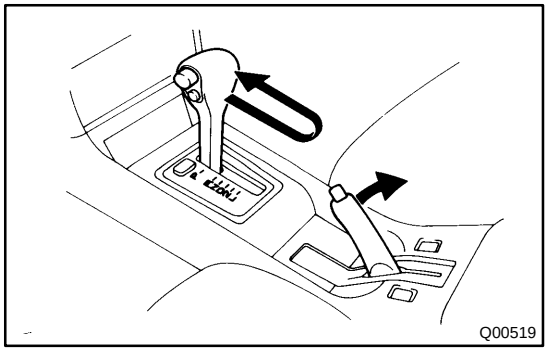
Q00519

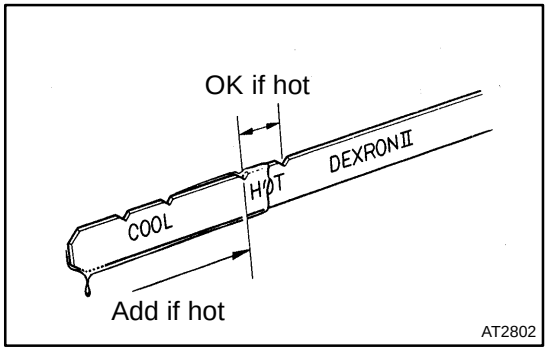

AT2802

7. BASIC INSPECTION

(a) Check the fluid level.

HINT:

- Drive the vehicle so that the engine and transaxle are at normal operating temperature.
  Fluid temperature: 70 - 80˚C (158 - 176˚F)
- Only use the COOL range on the dipstick as a rough reference when the fluid is replaced or the engine does not run.

(1) Park the vehicle on a level surface and set the parking brake.
(2) With the engine idling and the brake pedal depressed, shift the shift lever into all positions from P to L position and return to P position.
(3) Pull out the oil level gauge and wipe it clean.
(4) Push it back fully into the pipe.
(5) Pull it out and check that the fluid level is in the HOT range.

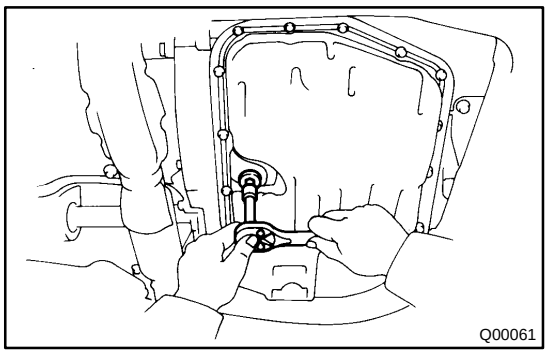
Q00061

If the level is at the low side, add new fluid.

Fluid type: ATF DEXRON®II

NOTICE:

Do not overfill.

(b) Check the fluid condition.

If the fluid smells burnt or is black, replace it.

(c) Replace the ATF.

(1) Using a 10 mm hexagon wrench, remove the drain plug and drain the fluid.

(2) Reinstall the drain plug securely.

(3) With the engine OFF, add new fluid through the oil filler pipe.

Fluid type: ATF DEXRON®II

Capacity:

Drain and refill: 2.5 liters (2.6 US qts, 2.2 Imp. qts)

(4) Start the engine and shift the shift lever into all positions from P to L position and then shift into P position.

(5) With the engine idling, check the fluid level. Add fluid up to the COOL level on the dipstick.

(6) Check the fluid level at the normal operating temperature 70 - 80˚C (158 - 176˚F) and add as necessary.

NOTICE:

Do not overfill.

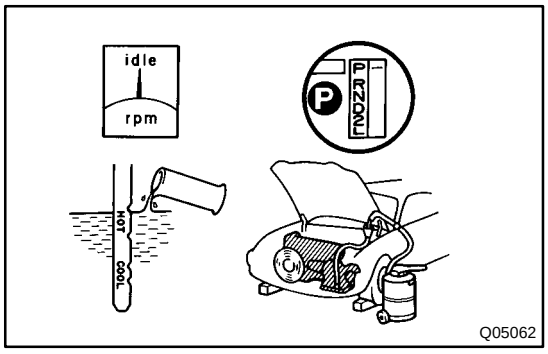

Q05062

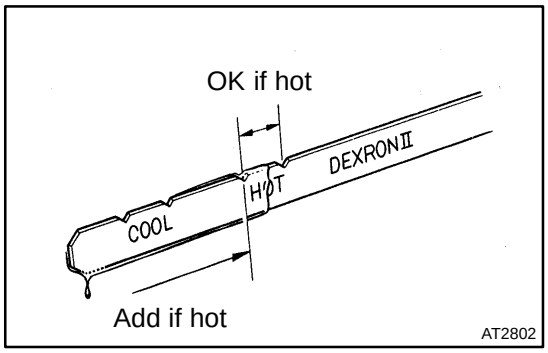

AT2802

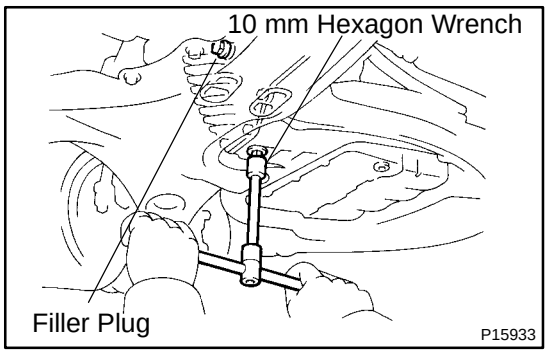

P15933

(d) Replace differential fluid if necessary.

(1) Using a 10 mm hexagon wrench, remove the drain plug and drain the fluid.

(2) Using a 10 mm hexagon wrench, install the drain plug securely.

(3) Remove the filler plug.

(4) Add new fluid until it begins to run out of the filler hole.

Fluid type: ATF DEXRON®II

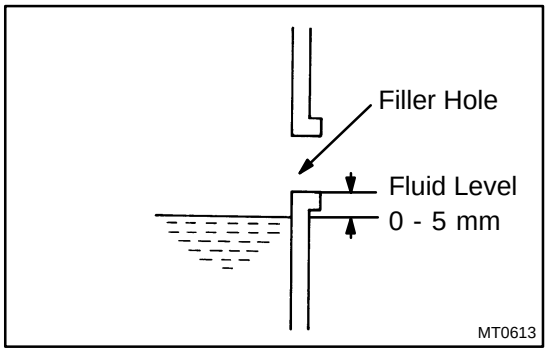

MT0613

(e) Check differential fluid level.

Remove the filler plug and check differential fluid level.

(f) Check fluid leaks

Check for leaks in the transaxle.

If there are leaks, it is necessary to replace O-rings, FIPG, oil seals, plugs or other parts.

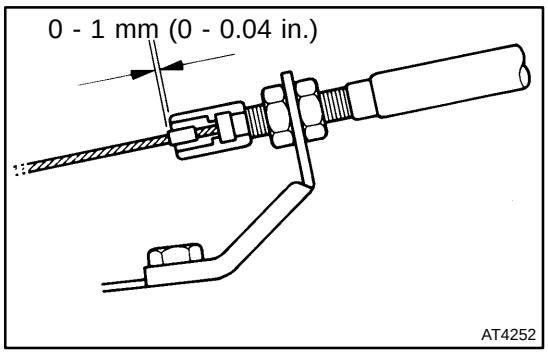

(g) Inspect and adjust the throttle cable.
(1) Check that the throttle valve is fully closed.
(2) Check that the inner cable is not slack.
(3) Measure the distance between the outer cable end and stopper on the cable.
Standard boot and cable stopper distance:
0 - 1 mm (0 - 0.04 in.)

If the distance is not within the specification, adjust the cable by the adjusting nuts.

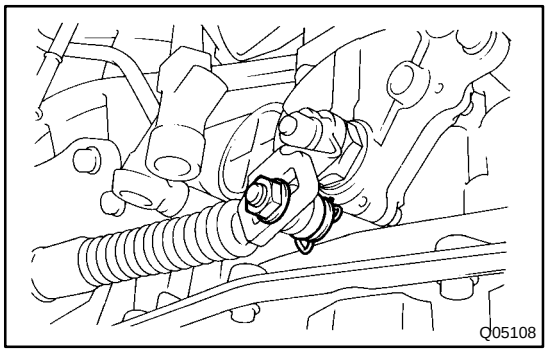

(h) Inspect and adjust the shift lever position.
When shifting the shift lever from the N position to the other positions, check that the lever can be shifted smoothly and accurately to each position and that the position indicator correctly indicates the position.

If the indicator is not aligned with the correct position, carry out the following adjustment procedures:
(1) Loosen the swivel nut on the manual shaft lever.
(2) Push the control shaft lever fully toward the right side of the vehicle.
(3) Return the control shaft lever 2 notches to the N position.
(4) Set the shift lever to N position.
(5) While holding the shift lever lightly toward the R position side, tighten the shift lever nut.
Torque: 13 N·m (135 kgf·cm, 10 ft·lbf)

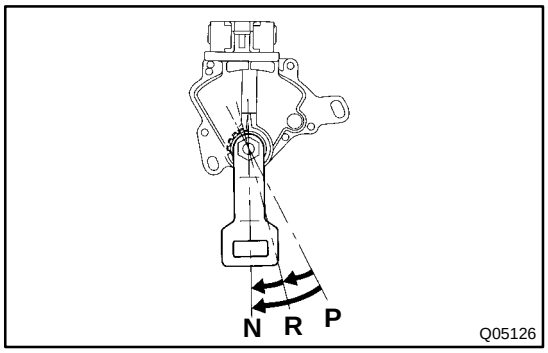

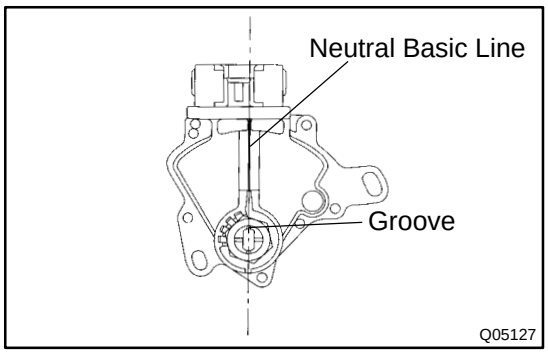

(i) Inspect and adjust the park/neutral position.
Check that the engine can be started with the shift lever only in the N or P position, but not in other positions.

If not as started above, carry out the following adjustment procedures:
(1) Loosen the park/neutral position switch bolt and set the shift lever to the N position.
(2) Align the groove and neutral basic line.
(3) Holding the shift lever tighten the bolt.
Torque: 5.4 N·m (55 kgf·cm, 48 in·lbf)

(j) Check the idle speed.
Idle speed: 750 ± 50 rpm
(In N position and A/C OFF)

8. MECHANICAL SYSTEM TESTS

(a) Measure the stall speed.

The object of this test is to check the overall performance of the transaxle and engine by measuring the stall speeds in the D and R positions.

NOTICE:

- **Do the test at normal operating ATF temperature 50 - 80˚C (122 - 176˚F).**
- **Do not continuously run this test longer than 5 seconds.**
- **To ensure safety, conduct this test in a wide, clear, level area which provides good traction.**
- **The stall test should always be carried out in pairs. One technician should observe the conditions of wheels or wheel stoppers outside the vehicle while the other is doing the test.**

(1) Chock the 4 wheels.

(2) Connect OBD II scan tool or TOYOTA hand-held tester to DLC3.

(3) Fully apply the parking brake.

(4) Keep your left foot pressed firmly on the brake pedal.

(5) Start the engine.

(6) Shift into the D position. Press all the way down on the accelerator pedal with your right foot. Quickly read the stall speed at this time.

Stall speed: 2,450 ± 150 rpm

(7) Do the same test in R position.

Stall speed: 2,450 ± 150 rpm

Evaluation:

Problem	Possible cause
(a) Stall speed low in D and R positions	• Engine output may be insufficient • Stator one-way clutch is operating properly HINT: If more than 600 rpm below the specified value, the torque converter clutch could be faulty.
(b) Stall speed high in D position	• Line pressure too low • Forward clutch slipping • No.2 one-way clutch not operating properly • O/D one-way clutch not operating properly
(c) Stall speed high in R position	• Line pressure too low • Direct clutch slipping • 1st and reverse brake slipping • O/D one-way clutch not operating properly
(d) Stall speed high in D and R positions	• Line pressure too low • Improper fluid level • O/D one-way clutch not operating properly

(b) Measure time lag.
When the shift lever is shifted while the engine is idling, there will be a certain time lapse or lag before the shock can be felt. This is used for checking the condition of the O/D direct clutch, forward clutch, direct clutch and 1st and reverse brake.

NOTICE:

- **Do the test at normal operating ATF temperature 50 - 80˚C (122 - 176˚F).**
- **Be sure to allow 1 minute interval between tests.**
- **Take 3 measurements and take the average value.**

(1) Fully apply the parking brake.
(2) Start the engine and check idle speed.
Idle speed: 750 ± 50 rpm (In N position and A/C OFF)
(3) Shift the shift lever from N to D position. Using a stop watch, measure the time it takes from shifting the lever until the shock is felt.
Time lag: N → D Less than 1.2 seconds
In the same way, measure the time lag for N → R.
Time lag: N → R Less than 1.5 seconds

Evaluation (If N → D time or N → R time lag is longer than specified):

Problem	Possible cause
N → D time lag is longer	• Line pressure too low • Forward clutch worn • O/D one-way clutch not operating
N → R time lag is longer	• Line pressure too low • Direct clutch worn • 1st and reverse brake worn • O/D clutch worn

9. HYDRAULIC TEST

Measure the pressure.

NOTICE:

- **Do the test at normal operatin ATF temperature 50 - 80˚C (122 - 176˚F).**
- **The line pressure test should always be carried out in pairs. One technician should observe the conditions of wheels or wheel stoppers outside the vehicle while the other is doing the test.**
- **Be careful to prevent SST's hose from interfering with the exhaust pipe.**

(1) Warm up the ATF.
(2) Remove the test plug on the transaxle case left side and connect SST (See page AX-14 for the location to connect SST).
SST 09992-00094 (09992-00230, 09992-00270)
(3) Fully apply the parking brake and chock the 4 wheels.
(4) Start the engine and check idling speed.
(5) Keep your left foot pressed firmly on the brake pedal and shift into D position.
(6) Measure the line pressure when the engine is idling.
(7) Press the accelerator pedal all the way down. Quickly read the highest line pressure when engine speed reaches stall speed.
(8) In the same way, do the test in R position.
Specified line pressure:

Condition	D position kPa (kgf/cm^2, psi)	R position kPa (kgf/cm^2, psi)
Idling	363 - 422 (3.7 - 4.3, 53 - 61)	618 - 794 (6.3 - 8.1, 90 - 115)
Stall	735 - 863 (7.5 - 8.8, 107 - 125)	1,373 - 1,608 (14.0 - 16.4, 199 - 233)

If the measured pressures are not up to specified values, recheck the throttle cable adjustment and retest.

Evaluation

Problem	Possible cause
If the measured value at all positions are higher	• Throttle cable out of adjustment • Throttle valve defective • Regulator valve defective
If the measured value at all positions are lower	• Throttle cable out of adjustment • Throttle valve defective • Regulator valve defective • Oil pump defective • O/D direct clutch defective
If pressure is low in the D position only	• D position circuit fluid leakage • Forward clutch defective
If pressure is low in the R position only	• R position circuit fluid leakage • Direct clutch defective • 1st and reverse brake defective

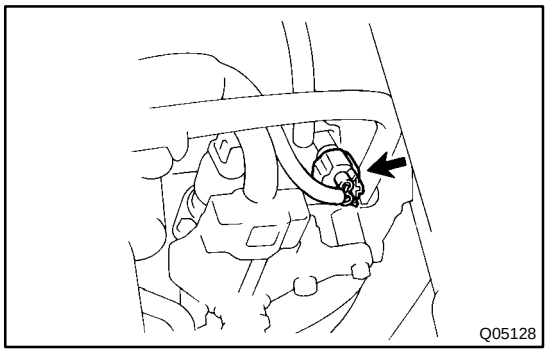

10. MANUAL SHIFTING TEST

HINT:

With this test, it can be determined whether the trouble is within the electrical circuit or is a mechanical problem in the transaxle.

(a) Disconnect the solenoid wire.

(b) Inspect the manual driving operation.
Check that the shift and gear positions correspond with the table below.

Shift Position	Gear Position
D	O/D
2	3rd
L	1st
R	Reverse
P	Pawl Lock

HINT:

If the positions (L, 2 and D position) are difficult to distinguish, do the following road test.

- While driving, shift through the L, 2 and D positions. Check that the gear change corresponds to the shift position.
- If any abnormality is found in the above test, the problem is in the transaxle itself.

(c) Connect the solenoid wire.

(d) Clear the DTC (See page DI-219).

DI531-03

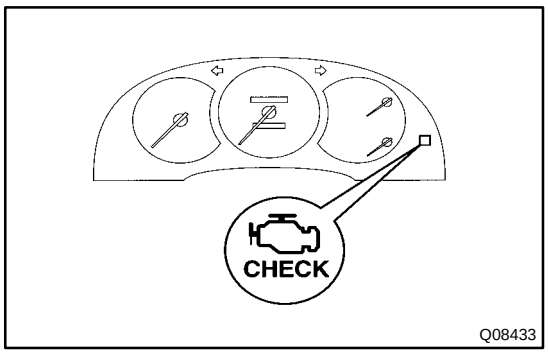

PRE-CHECK

1. DIAGNOSIS SYSTEM

(a) Description

- When troubleshooting OBD II vehicles, the only difference from the usual troubleshooting procedure is that you connect the OBD II scan tool complying with SAE J1978 or TOYOTA hand-held tester, to vehicle and read off various data output from the vehicle's ECM.
- OBD II regulations require that the vehicle's on-board computer lights up the Malfunction Indicator Lamp (MIL) on the instrument panel when the computer detects a malfunction in the computer itself or in drive system components which affect vehicle emissions. In addition to the MIL lighting up when a malfunction is detected, the applicable DTCs prescribed by SAE J2012 are recorded in the ECM memory (See page DI-121).

If the malfunction does not reoccur in 3 trips, the MIL goes off but the DTCs remain recorded in the ECM memory.

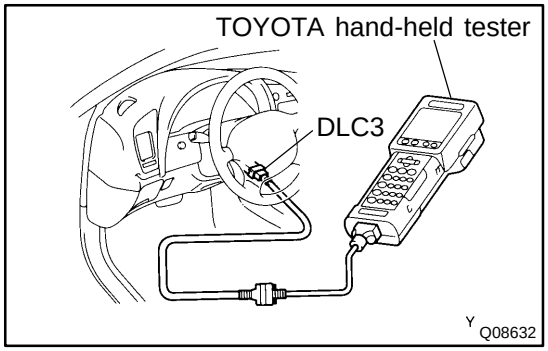

- To check the DTCs, connect the OBD II scan tool or TOYOTA hand-held tester to DLC3 on the vehicle. The OBD II scan tool or TOYOTA hand-held tester also enables you to erase the DTCs and check freezed frame data and various forms of engine data (For operating instructions, see the OBDII scan tool's instruction book).
- DTCs include SAE controlled codes and Manufacturer controlled codes.
- SAE controlled codes must be set as prescribed by the SAE, while Manufacturer controlled codes can be set freely by the manufacturer within the prescribed limits (See DTC chart on page DI-230).

- The diagnosis system operates in normal mode during normal vehicle use, and also has a check mode for technicians to simulate malfunction symptoms and perform troubleshooting. Most DTCs use 2 trip detection logic(*) to prevent erroneous detection. By switching the ECM to check mode when troubleshooting, the technician can cause the MIL to light up and for a malfunction that is only detected once or momentarily (TOYOTA hand-held tester) (See page DI-219).
- *2 trip detection logic:
  When a logic malfunction is first detected, the malfunction is temporarily stored in the ECM memory. If the same malfunction is detected again during the second test drive, this second detection causes the MIL to light up.

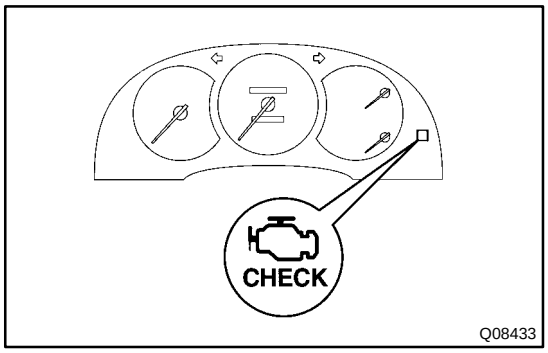

2. INSPECT DIAGNOSIS (Normal Mode)

(a) Check the MIL.

(1) The MIL lights up when the ignition switch is turned ON and the engine is not running.

HINT:

If the MIL does not light up, troubleshoot the combination meter (See page BE-38).

(2) When the engine is starts, the MIL should go off. If the lamp remains on, the diagnosis system has detected a malfunction or abnormality in the system.

(b) Check the DTC.

NOTICE:

TOYOTA hand-held tester only: When the diagnostic system is switched from normal mode to check mode, it erases all DTCs and freezed frame data recorded in normal mode. So before switching modes, always check the DTCs and freezed frame data, and note them down.

(1) Prepare the OBD II scan tool (complying with SAE J1978) or TOYOTA hand-held tester.

(2) Connect the OBD II scan tool or TOYOTA hand-held tester to DLC3 at the lower of the instrument panel.

(3) Turn the ignition switch ON and turn the OBD II scan tool or TOYOTA hand-held tester switch ON.

(4) Use the OBD II scan tool or TOYOTA hand-held tester to check the DTCs and freezed frame data. Note them down (For operating instructions, see the OBD II scan tool's instruction book).

(5) See page DI-230 to confirm the details of the DTCs.

NOTICE:

When simulating symptoms with an OBD II scan tool (excluding TOYOTA hand-held tester) to check the DTCs, use normal mode. For codes on the DTC chart subject to "2 trip detection logic", turn the ignition switch off after the symptoms have been simulated for the first time. Then repeat the simulation process again. When the program has been simulated twice, the MIL lights up and the DTCs are recorded in the ECM.

3. INSPECT DIAGNOSIS (Check mode)

HINT:

TOYOTA hand-held tester only:

Compared to the normal mode, the check mode has high sensing ability to detect malfunctions. Furthermore, the same diagnostic items which are detected in normal mode can also be detected in check mode.

(a) Check the DTC.

(1) Check the initial conditions.
- Battery positive voltage 11 V or more.
- Throttle valve fully closed.
- Transaxle in the PARK position.
- Air conditioning switched off.

(2) Turn the ignition switch OFF.

(3) Prepare a TOYOTA hand-held tester.

(4) Connect the TOYOTA hand-held tester to DLC3 at the lower of the instrument panel.

(5) Turn the ignition switch ON and switch the TOYOTA hand-held tester ON.

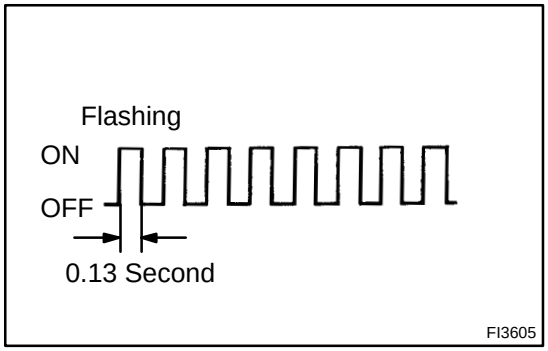

(6) Switch the TOYOTA hand-held tester from normal mode to check mode (Check that the MIL flashes).

(7) Start the engine (The MIL goes off after the engine starts).

(8) Simulate the conditions of the malfunction described by the customer.

NOTICE:

Leave the ignition switch ON until you have checked the DTCs, etc.

(9) After simulating the malfunction conditions, use the TOYOTA hand-held tester diagnosis selector to check the DTCs and freezed frame data, etc.

HINT:

Take care not to turn the ignition switch OFF. Turning the ignition switch off switches the diagnosis system from check mode to normal mode, so all DTCs, etc. are erased.

(10) After checking the DTC, inspect the applicable circuit.

(b) Clear the DTC.
The following actions will erase the DTCs and freezed frame data. Operating the OBD II scan tool (complying with SAE J1978) or TOYOTA hand-held tester to erase the codes (See the OBD II scan tool's instruction book for operating instructions.).

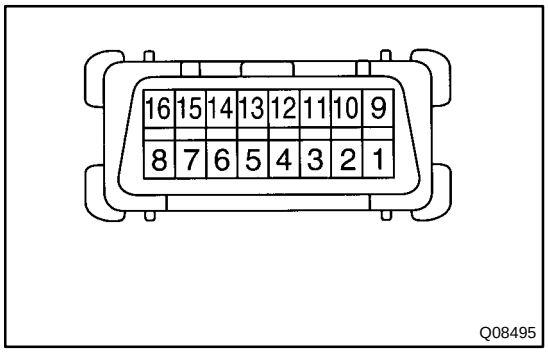

(c) Inspect the DLC3.
The vehicle's ECM uses V.P.W. (Variable Pulse Width) for communication to comply with SAE J1850. The terminal arrangement of DLC3 complies with SAE J1962 and matches the V.P.W. format.

Terminal No.	Connection / Voltage or Resistance	Condition
2	Bus ⊕ Line / Pulse generation	During transmission
4	Chassis Ground / ↔ Body / 1 Ω or less	Always
5	Signal Ground / ↔ Body / 1 Ω or less	Always
16	Battery Positive / ↔ Body / 1 Ω or less Battery Positive / ↔ Body / 9 - 14 V	Always

HINT:
If your display shows "UNABLE TO CONNECT TO VEHICLE" when you have connected the cable of the OBD II scan tool or TOYOTA hand-held tester to DLC3, turned the ignition switch ON and operated the scan tool, there is a problem on the vehicle side or tool side.
- If communication is normal when the tool is connected to another vehicle, inspect DLC3 on the original vehicle.
- If communication is still not possible when the tool is connected to another vehicle, the problem is probably in the tool itself, so consult the Service Department listed in the tool's instruction manual.

4. CHECK FOR INTERMITTENT PROBLEMS

HINT:
TOYOTA hand-held tester only:
By putting the vehicle's ECM in check mode, 1 trip detection logic is possible instead of 2 trip detection logic and sensitivity to detect open circuits is increased. This makes it easier to detect intermittent problems.
(a) Clear the DTC (See step 3).
(b) Set the check mode (See step 3).
(c) Perform a simulation test (See page IN-18).
(d) Check the connector and terminal (See page IN-28).
(e) Handle the connector (See page IN-28).

5. PROBLEM SYMPTOM CONFIRMATION

Taking into consideration the results of the customer problem analysis, try to reproduce the symptoms of the trouble. If the problem is that the transaxle does not up-shift, does not down-shift, or the shift point is too high or too low, conduct the following road test the end simulate the problem symptoms.

6. ROAD TEST

NOTICE:

Do the test at normal ATF operating temperature 50 - 80˚C (122 - 176˚F).

(a) D position test

Shift into the D position and keep the accelerator pedal constant at the full throttle valve opening position, and check the following points:

(1) Check up-shift operation.

1 → 2, 2 → 3 and 3 → O/D up-shift takes place, at the shift point shown in the automatic shift schedule (See page SS-53)

HINT:

- O/D Gear Up-shift Prohibition Control (1. Engine coolant temperature is 55˚C (131˚F) or less. 2. If there is a 10 km/h (6 mph) difference between the set cruise control speed and vehicle speed. 3. O/D main switch is pushed ON (During O/D OFF, indicator light lights up).
- O/D Gear Lock-up Prohibition Control (1. Brake pedal is depressed. 2. Engine coolant temperature is 55˚C (131˚F) or less.)

(2) Check for shift shock and slip.

Check for shock and slip at the 1 → 2, 2 → 3 and 3 → O/D up-shifts.

(3) Check for abnormal noise and vibration.

Run at the D position lock-up or O/D gear and check for abnormal noise and vibration.

HINT:

The check for the cause of abnormal noise and vibration must be perform very thoroughly as it could also be due to loss of balance in the differential, torque converter clutch, etc.

(4) Check kick-down operation.

While running in the D position, 2nd, 3rd and O/D gears, check to see that the possible kick-down vehicle speed limits for 2 → 1, 3 → 2 and O/D → 3 kick-downs conform to those indicated on the automatic shift schedule (See page SS-53).

(5) Check abnormal shock and slip at kick-down.

(6) Check the lock-up mechanism.

- Drive in D position, O/D gear, at a steady speed (lock-up ON) of about 70 km/h (43 mph).
- Lightly depress the accelerator pedal and check that the RPM does not change abruptly.

If there is a big jump in RPM, there is no lock-up.

(b) 2 position test.

Shift into the 2 position and while driving with the accelerator pedal held constantly at the full throttle valve opening position, and on the following points:

(1) Check up-shift operation.

Check that the 1 → 2 up-shift takes place and that the shift point conforms to the automatic shift schedule (See page SS-53).

HINT:

- There is no O/D up-shift and lock-up in the 2 position.

(2) Check engine braking.

While running in the 2nd gear of the 2 position, release the accelerator pedal and check the engine braking effect.

(3) Check for abnormal noises during acceleration and deceleration, and for shock during up-shift and down-shift.

(c) L position test.
Shift into the L position and while driving with the accelerator pedal held constanty at the full throttle valve opening position, and check the these points:
(1) Check no up-shift.
While running in the L position, check that there is no up-shift to 2nd gear.
(2) Check engine braking.
While running in the L position, release the accelerator pedal and check the engine braking effect.
(3) Check for abnormal noises during acceleration and deceleration.

(d) R position test
Shift into the R position and while starting at full throttle, check for slipping.

CAUTION:
Before conducting this test ensure that the test area is free from personnel and obstructor.

(e) P position test
Stop the vehicle on a grade (more than 5˚) and after shifting into the P position, release the parking brake. Then check to see that the parking lock pawl holds the vehicle in place.

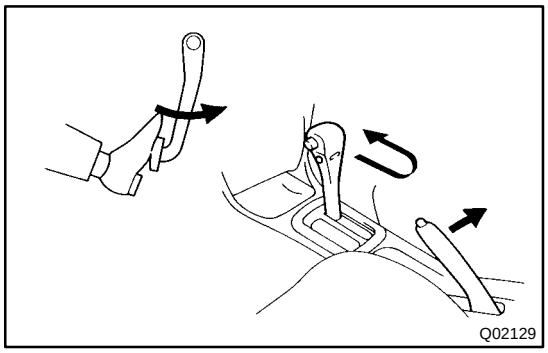
Q02129

7. BASIC INSPECTION

(a) Check the fluid level.

HINT:

- Drive the vehicle so that the engine and transaxle are at normal operating temperature.
  Fluid temperature: 70 - 80˚C (158 - 176˚F)
- Only use the COOL position on the dipstick as a rough reference when the fluid is replaced or the engine does not run.

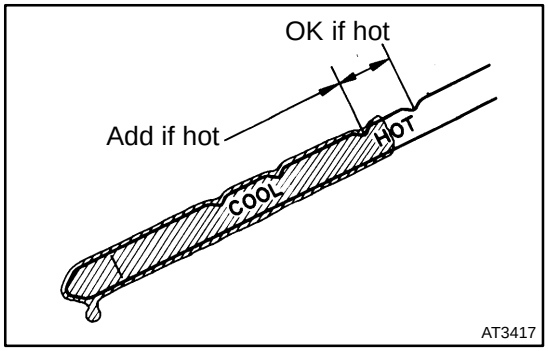

AT3417

(1) Park the vehicle on a level surface and set the parking brake.
(2) With the engine idling and the brake pedal depressed, shift the shift lever into all positions from P to L position and return to P position.
(3) Pull out the level gauge and wipe it clean.
(4) Push it back fully into the pipe.
(5) Pull it out and check that the fluid level is in the HOT position.

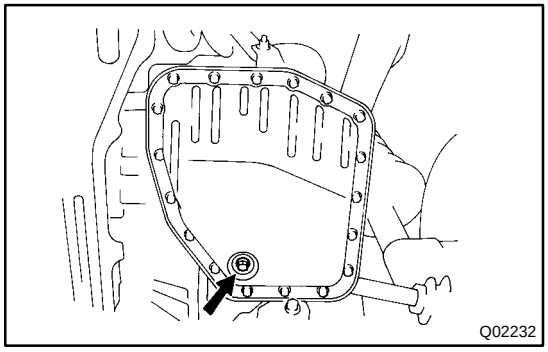
Q02232

If the level is at the low side, add new fluid.
Fluid type: ATF DEXRON®II

NOTICE:
Do not overfill.

(b) Check the fluid condition.
If the fluid smells burnt or is black, replace it.

(c) Replace the ATF.
(1) Remove the drain plug and drain the fluid.
(2) Reinstall the drain plug securely.

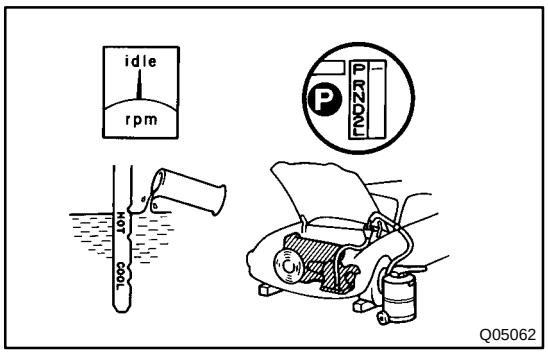

(3) With the engine OFF, add new fluid through the fluid filler pipe.

Fluid type: ATF DEXRON®II

Capacity:

Drain and refill: 3.1 liters (3.3 US qts, 2.7 Imp. qts)

(4) Start the engine and shift the shift lever into all positions from P to L position and then shift into P position.

(5) With the engine idling, check the fluid level. Add fluid up to the COOL level on the dipstick.

(6) Check the fluid level at the normal operating temperature 70 - 80˚C (158 - 176˚F) and add as necessary.

NOTICE:

Do not overfill.

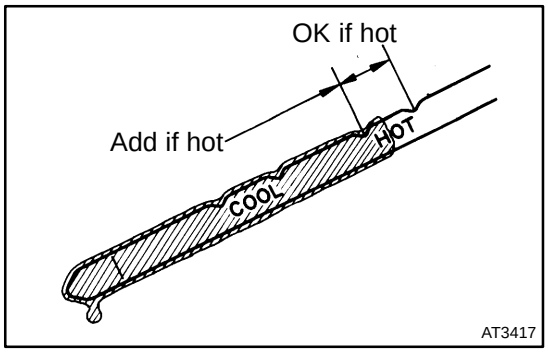

(d) Check the fluid leaks.

Check for leaks in the transaxle.

If there are leaks, it is necessary to repair or replace O-rings, gaskets, oil seals, plugs or other parts.

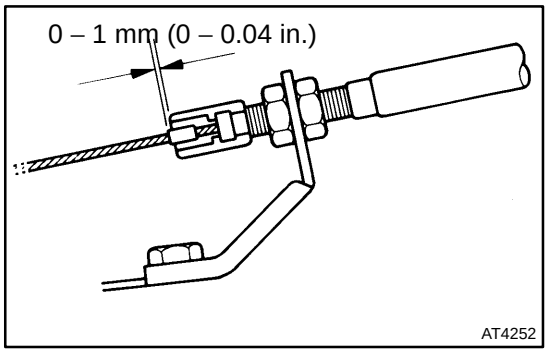

(e) Inspect and adjust the throttle cable.

(1) Check that the throttle valve is fully closed.

(2) Check that the inner cable is not slack.

(3) Measure the distance between the outer cable end and stopper on the cable.

Standard distance: 0 - 1 mm (0 - 0.04 in.)

If the distance is not standard, adjust the cable by the adjusting nuts.

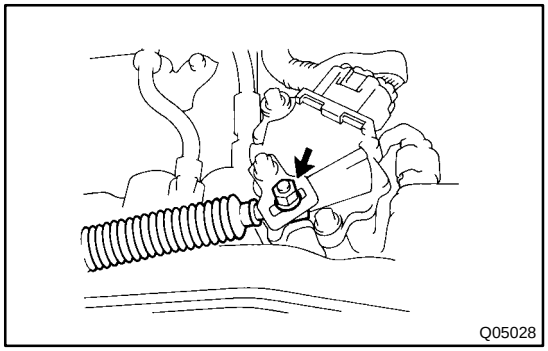

(f) Inspect and adjust the shift lever position.

When shifting the shift lever from the N position to other positions, check that the lever can be shifted smoothly and accurately to each position and that the position indicator correctly indicates the position.

If the indicator is not aligned with the correct position, carry out the following adjustment procedures:

(1) Loosen the nut on the control shaft lever.

(2) Push the control shaft lever fully downward.

(3) Return the control shaft lever 2 notches to N position.

(4) Set the shift lever to N position.

(5) While holding the shift lever lightly toward the R position side, tighten the shift lever nut.

Torque: 13 N·m (135 kgf·cm, 10 ft·lbf)

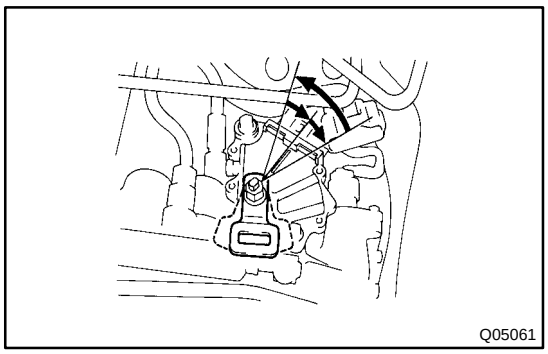
Q05061

(6) Start the engine and make sure that the vehicle moves forward when shifting the lever from the N to D position and reverses when shifting it to the R position.

(g) Inspect and adjust the park/neutral position.
Check that the engine can be started with the shift lever only in the N or P position, but not in other positions.

If not as started above, carry out these adjustment procedure.

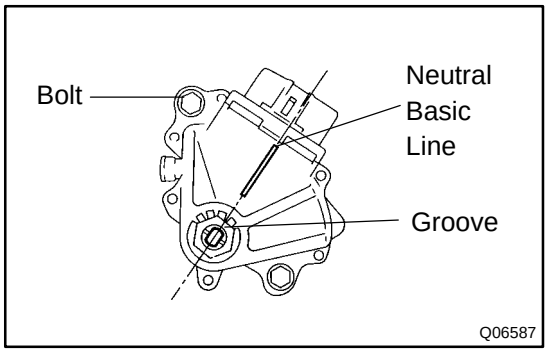

Q06587

(1) Loosen the park/neutral position switch bolt and set the shift lever to the N position.
(2) Align the groove and neutral basic line.
(3) Hold in position and tighten the bolt.
Torque: 5.4 N·m (55 kgf·cm, 48 in·lbf)
For continuity inspection of the park/neutral position swtch. (See page DI-293).

(h) Check the idle speed.
Idle speed: 700 ± 50 rpm
(In N position and A/C OFF)

8. MECHANICAL SYSTEM TESTS

(a) Measure the stall speed.
The object of this test is to check the overall performance of the transaxle and engine by measuring the stall speeds in the D and R positions.

NOTICE:

- **Do the test at normal operation ATF fluid temperature 50 - 80˚C (122 - 176˚F).**
- **Do not continuously run this test longer than 5 seconds.**
- **To ensure safety, conduct this test in a wide, clear level area which provides good traction.**
- **The stall test should always be carried out in pairs. One technician should observe the conditions of wheels or wheel stoppers outside the vehicle while the other is doing the test.**

(1) Chock the 4 wheels.
(2) Fully apply the parking brake.
(3) Connect an OBD II scan tool or TOYOTA hand-held tester to DLC3.
(4) Start the engine and check idle speed.
(5) Keep your left foot pressed firmly on the brake pedal.
(6) Shift into the D position. Fully depress the accelerator pedal. Quickly read the stall speed at this time.
Stall speed: 2,550 ± 150 rpm
(7) Do the same test in R position.
Stall speed: 2,550 ± 150 rpm

Evaluation:

Problem	Possible cause
(a) Stall speed low in D and R positions	• Engine output may be insufficient • Stator one-way clutch is operating properly HINT: If more than 600 rpm below the specified value, the torque converter clutch could be faulty.
(b) Stall speed high in D position	• Line pressure too low • Forward clutch slipping • No.2 one-way clutch not operating properly • U/D one-way clutch not operating properly
(c) Stall speed high in R position	• Line pressure too low • Direct clutch slipping • 1st and reverse brake slipping • U/D brake slipping
(d) Stall speed high in D and R positions	• Line pressure too low • Improper fluid level • U/D one-way clutch not operating properly

(b) Measure the time lag.

When the shift lever is shifted while the engine is idling, there will be a certain time lapse or lag before the shock can be felt. This is used for checking the condition of the U/D direct clutch, forward clutch,direct clutch and 1st and reverse brake.

NOTICE:

- **Do the test at normal operating ATF temperature 50 - 80˚C (122 - 176˚F).**
- **Be sure to allow 1 minute interval between tests.**
- **Take three measurements and take the average value.**

(1) Fully apply the parking brake.

(2) Start the engine and check idle speed.

Idle speed: 700 ± 50 rpm (In N position and A/C OFF)

(3) Shift the shift lever from N to D position. Using a stop watch, measure the time it takes from shifting the lever until the shock is felt.

- In same way, measure the time lag for N → R.

Time lag:

Time lag: N → D Less than 1.2 seconds

- In same way, measure the time lag for N → R.

Time lag: N → R Less than 1.5 seconds

Evaluation (If N → D or N → R time lag is longer than specified):

Problem	Possible cause
N → D time lag is longer	• Line pressure too low • Forward clutch worn • U/D one-way clutch not operating properly
N → R time lag is longer	• Line pressure too low • Direct clutch worn • 1st and reverse brake worn • U/D brake worn

9. HYDRAULIC TEST

Measure the line pressure.

NOTICE:

- **Do the test at normal operating ATF temperature 50 - 80˚C (122 - 176˚F).**
- **The line pressure test should always be carried out in pairs. One technician should observe the conditions of wheels or wheel stoppers outside the vehicle while the other is doing the test.**
- **Be careful to prevent the SST's hose from interfering with the exhaust pipe.**

(1) Warm up the transaxle fluid.

(2) Remove the test plug on the transaxle case left side and connect SST (See page AX-13 for the location to connect SST).

SST 09992-00094 (09992-00230, 09992-00270)

HINT:

Connecting the oil pressure gauge will be made easier by moving LH side heat insulator aside.

(3) Chock the 4 wheels.

(4) Fully apply the parking brake.

(5) Start the engine and check idling speed.

(6) Keep your left foot pressed firmly on the brake pedal and shift into D position.

(7) Measure the line pressure when the engine is idling.

(8) Fully depress the accelerator pedal. Quickly read the highest line pressure when engine speed reaches stall speed.

NOTICE:

Release the accelerator pedal and stop test if the wheels begin to rotate before the engine speed reaches specified stall speed.

(9) In the same way, do the test in the R position.

Specified line pressure:

Condition	D position kPa (kgf/cm^2, psi)	R position kPa (kgf/cm^2, psi)
Idling	373 - 441 (3.8 - 4.5, 54 - 64)	598 - 716 (6.1 - 7.3, 87 - 104)
Stall	980 - 1,138 (10.0 - 11.6, 142 - 165)	1,393 - 1,716 (14.2 - 17.5, 201 - 249)

If the measured pressures are not up to specified values, recheck the throttle cable adjustment and retest.

Evaluation

Problem	Possible cause
If the measured value in all positions are higher	• Throttle cable out of adjustment • Throttle valve defective • Regulator valve defective
If the measured value in all positions are lower	• Throttle cable out of adjustment • Throttle valve defective • Regulator valve defective • Oil pump defective • U/D direct clutch defective
If pressure is low in the D position only	• D position circuit fluid leakage • Forward clutch defective
If pressure is low in the R position only	• R position circuit fluid leakage • Direct clutch defective • 1st and reverse brake defective

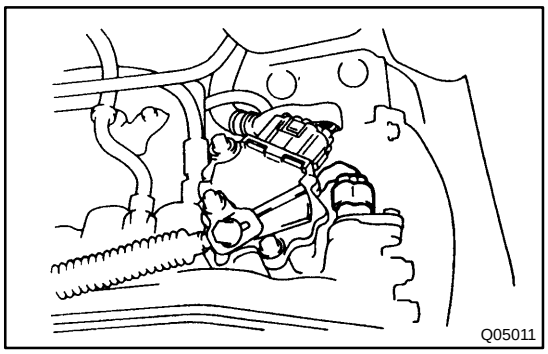

10. MANUAL SHIFTING TEST

HINT:

With this test, it can be determined whether the trouble is within the electrical circuit or is a mechanical problem in the transaxle.

(a) Disconnect the solenoid wire.

(b) Inspect the manual driving operation.

Check that the shift and gear positions correspond with the table below.

Shift Position	Gear Position
D	O/D
2	3rd
L	1st
R	Reverse
P	Pawl Lock

HINT:

If the L, 2 and D position gear positions are difficult to distinguish, do the following road test.

- While driving, shift through the L, 2 and D positions. Check that the gear change corresponds to the shift position.
- If any abnormality is found in the above test, the problem is in the transaxle itself.

(c) Connect the solenoid wire.

(d) Clear out the DTC (See page DI-219).

DI53H-02

PRE-CHECK

1. DIAGNOSIS SYSTEM

(a) Check the indicator.

When the ignition switch is turned ON, check that the ABS warning light goes on for 3 seconds.

HINT:

If the indicator check result is not normal, proceed to trouble-shooting for the ABS warning light circuit (See page DI-336).

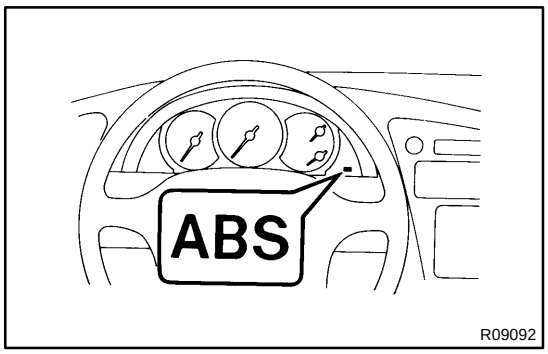

(b) Check the DTC.

(1) Disconnect the short pin from DLC1.

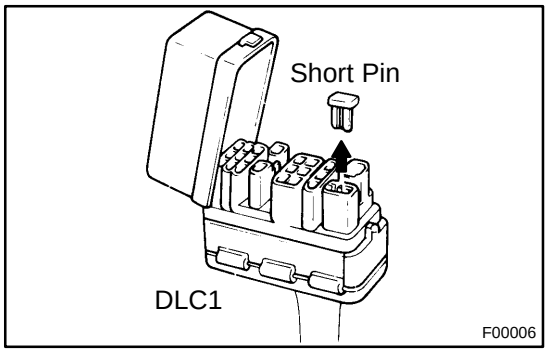

(2) Using SST, connect terminals Tc and E_1 of DLC1.

SST 09843-18020

(3) Turn the ignition switch ON.

(4) Read the DTC from the ABS warning light on the combination meter.

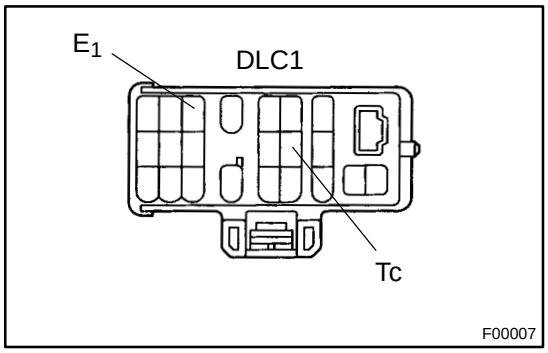

HINT:

- If no code appears, inspect the diagnostic circuit or ABS warning light circuit (See page DI-339 or DI-336).
- As an example, the blinking patterns for normal code and codes 11 and 21 are shown on the left.

(5) Codes are explained in the code table on page DI-312 .

(6) After completing the check, disconnect terminals Tc and E_1, and turn off the display.

If 2 or more malfunctions are indicated at the same time, the lowest numbered DTC will be displayed 1st.

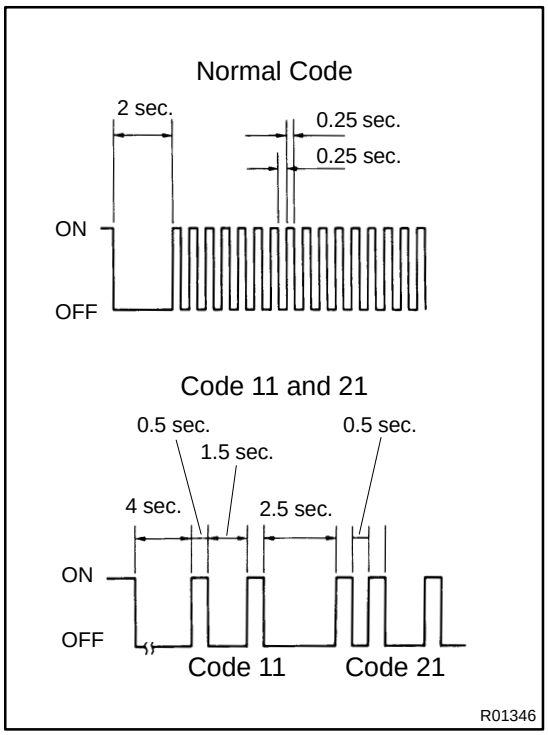

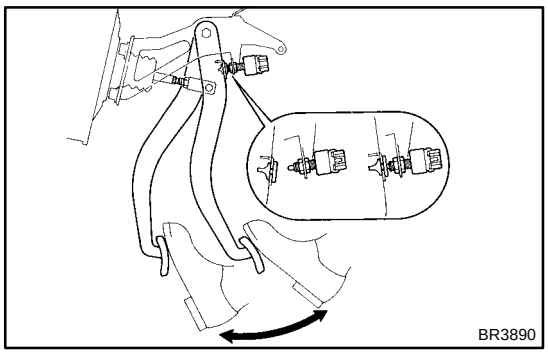

(c) Clear the DTC.
(1) Using SST, connect terminals Tc and E_1 of DLC1 and remove the short pin from DLC1.
SST 09843-18020
(2) IG switch ON.
(3) Clear the DTC stored in ECU by depressing the brake pedal 8 or more times within 5 seconds.

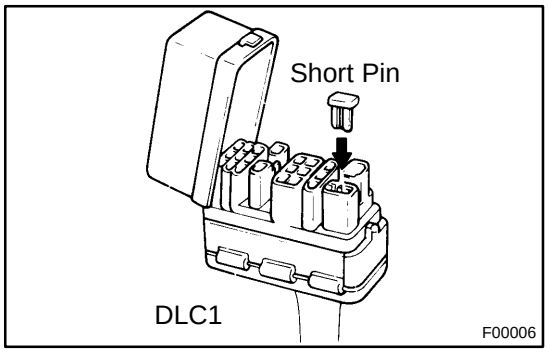

(4) Check that the warning light shows the normal code.
(5) Remove the SST from the terminals of DLC1.
SST 09843-18020
(6) Connect the short pin to DLC1.

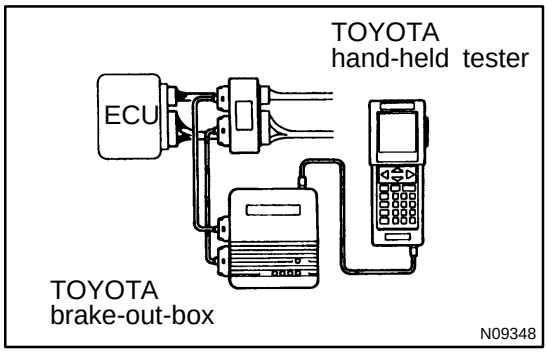

(d) Using TOYOTA brake-out-box and TOYOTA hand-held tester, measure the ECU terminal valves.
(1) Turn the IG switch OFF.
(2) Hook up the TOYOTA hand-held tester and TOYOTA break-out-box to the vehicle.
(3) Turn the IG switch ON.
(4) Read the ECU input/output values by following the prompts on the tester screen.

HINT:
TOYOTA hand-held tester has a ”Snapshot” function. This records the measured values and is effective in the diagnosis of intermittent problems.
Please refer to the TOYOTA hand-held tester/TOYOTA break-out-box operator’s manual for further details.

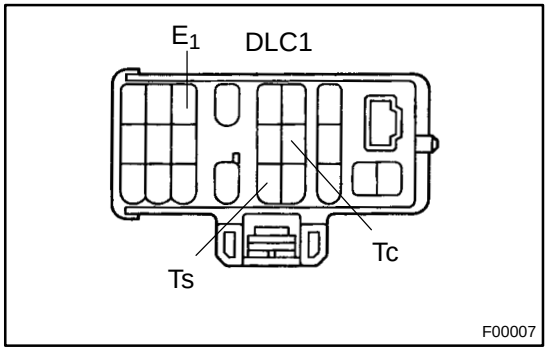

2. SPEED SENSOR SIGNAL

Check the speed sensor signal.
(1) Turn the ignition switch to OFF.
(2) Using SST, connect terminals Ts and E_1 of DLC1.
SST 09843-18020
(3) Start the engine.

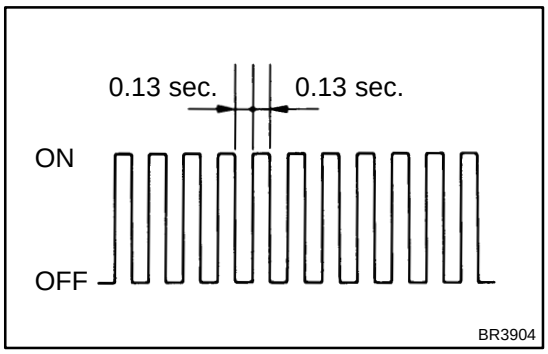

(4) Check that the ABS warning light blinks.

HINT:

If the ABS warning light does not blink, inspect the ABS warning light circuit (See page DI-336).

(5) Drive vehicle straight forward.

HINT:

Drive vehicle faster than 45 km/h (28 mph) for several seconds.

(6) Stop the vehicle.

(7) Using SST, connect terminals Tc and E_1 of DLC1.

SST 09843-18020

(8) Read the number of blinks of the ABS warning light.

HINT:

See the list of DTC shown on the next page.

- If every sensor is normal, a normal code is output (A cycle of 0.25 sec. ON and 0.25 sec. OFF is repeated).
- If 2 or more malfunctions are indicated at the same time, the lowest numbered code will be displayed 1st.

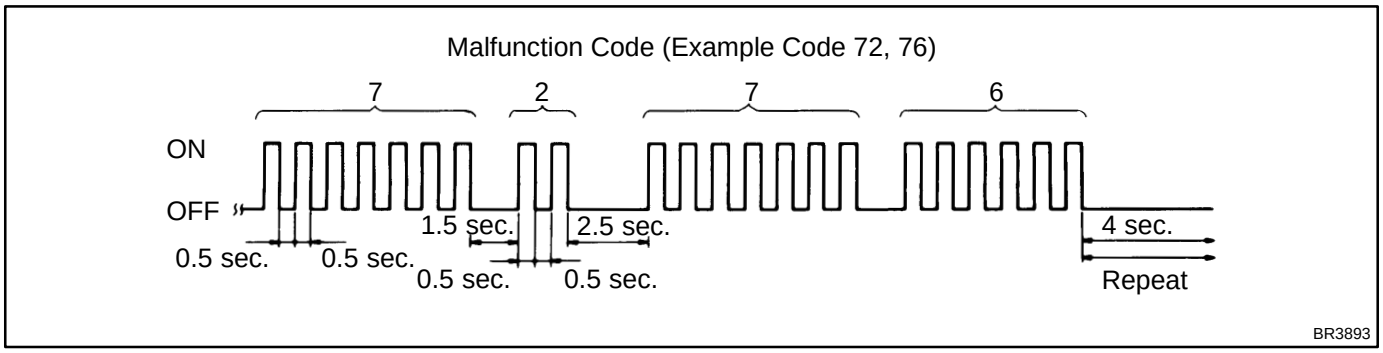

(9) After doing the check, disconnect terminals Ts and E_1, Tc and E_1 of DLC1, and ignition switch turned OFF.

DTC of speed sensor check function:

Code No.	Diagnosis	Trouble Area
71	Low output voltage of right front speed sensor	• Right front speed sensor • Sensor installation • Sensor rotor
72	Low output voltage of left front speed sensor	• Left front speed sensor • Sensor installation • Sensor rotor
73	Low output voltage of right rear speed sensor	• Right rear speed sensor • Sensor installation • Sensor rotor
74	Low output voltage of left rear speed sensor	• Left rear speed sensor • Sensor installation • Sensor rotor
75	Abnormal change in output voltage of right front speed sensor	• Right front speed sensor rotor
76	Abnormal change in output voltage of left front speed sensor	• Left front speed sensor rotor
77	Abnormal change in output voltage of right rear speed sensor	• Right rear speed sensor rotor
78	Abnormal change in output voltage of left rear speed sensor	• Left rear speed sensor rotor

DI540-01

PRE-CHECK

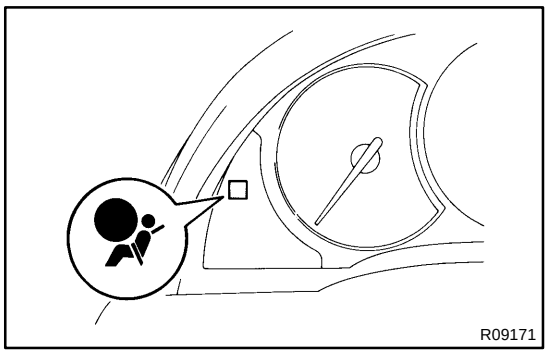

1. SRS WARNING LIGHT CHECK

(a) Turn the ignition switch to ACC or ON and check that the SRS warning light lights up.

(b) Check that the SRS warning light goes out after approx. 6 seconds.

HINT:

- When the ignition switch is at ACC or ON and the SRS warning light remains on or flashes, the center airbag sensor assembly has detected a malfunction code.
- If, after approx. 6 seconds have elapsed, the SRS warning light sometimes lights up or the SRS warning light lights up even when the ignition switch is OFF, a short in the SRS warning light circuit can be considered likely. Proceed to "SRS warning light system malfunction" on page DI-401 , DI-403 .

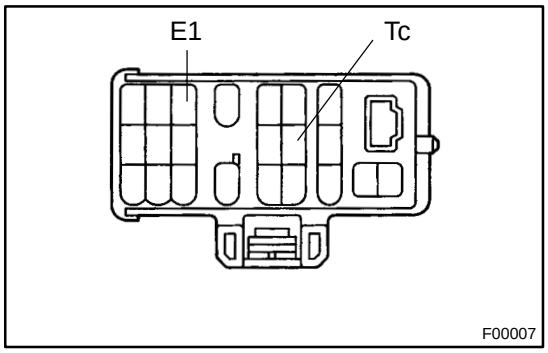

2. DTC check (Using diagnosis check wire)

(a) Present Troubles Codes:

Output the DTC.

(1) Turn the ignition switch to ACC or ON position and wait approx. 20 seconds.

(2) Using SST, connect the terminals Tc and E1 of the DLC1.

SST 09843-18020

NOTICE:

Never make a mistake with the terminal connection position as this will cause a malfunction.

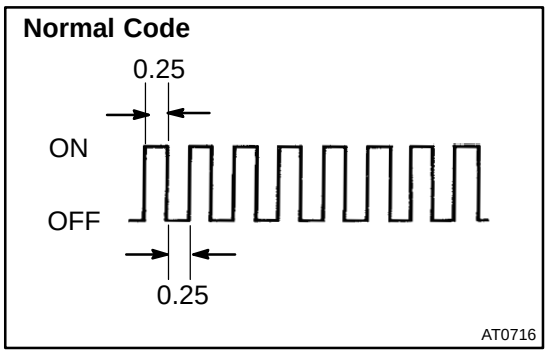

(b) Read the DTC.
Read the 2-digit DTC as indicated by the number of times the SRS warning light blinks. As an example, the blinking patterns, normal, 11 and 31 are as shown on the illustration.

- Normal code indication
  The light will blink 2 times per second.
- Malfunction code indication
  The first blinking output indicates the first digit of a 2-digit DTC. After a 1.5 second pause, the second blinking output will indicate the second digit.

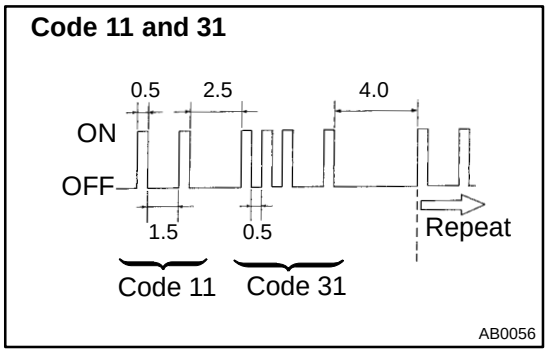

If there are 2 or more codes, there will be a 2.5 second pause between each code. After all the codes have been output, there will be a 4.0 second pause and they will all be repeated.
HINT:

- In the event of a number of trouble codes, indication will start from the smallest numbered code.
- If it does not output a DTC or outputs a DTC without terminal connection, proceed to the Tc terminal circuit inspection on page DI-406 .

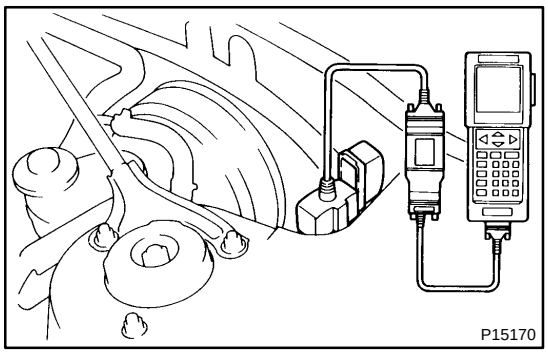

3. DTC CHECK (Using TOYOTA hand-held tester)

(a) Hook up the TOYOTA hand-held tester to the DLC1.
(b) Read the DTCs by following the prompts on the tester screen.

HINT:
Please refer to the TOYOTA hand-held tester operator's manual, for further details.

4. DTC CLEARANCE (Using diagnosis check wire)

(a) Connect the 2 service wires to terminals Tc and AB of DLC1.

(b) Turn the ignition switch to ACC or ON and wait approx.6 seconds.

(c) Starting with the Tc terminal, apply body ground alternately to terminal Tc and terminal AB twice each in cycles of 1.0 seconds. Confirm that body ground is absolute. Finally, keep applying body ground to terminal Tc.

HINT:

When alternately grounding terminals Tc and AB, release ground from one terminal and immediately apply it to the other terminal within an interval of 0.2 second. If DTCs do not clear, repeat the above procedure until the codes are cleared.

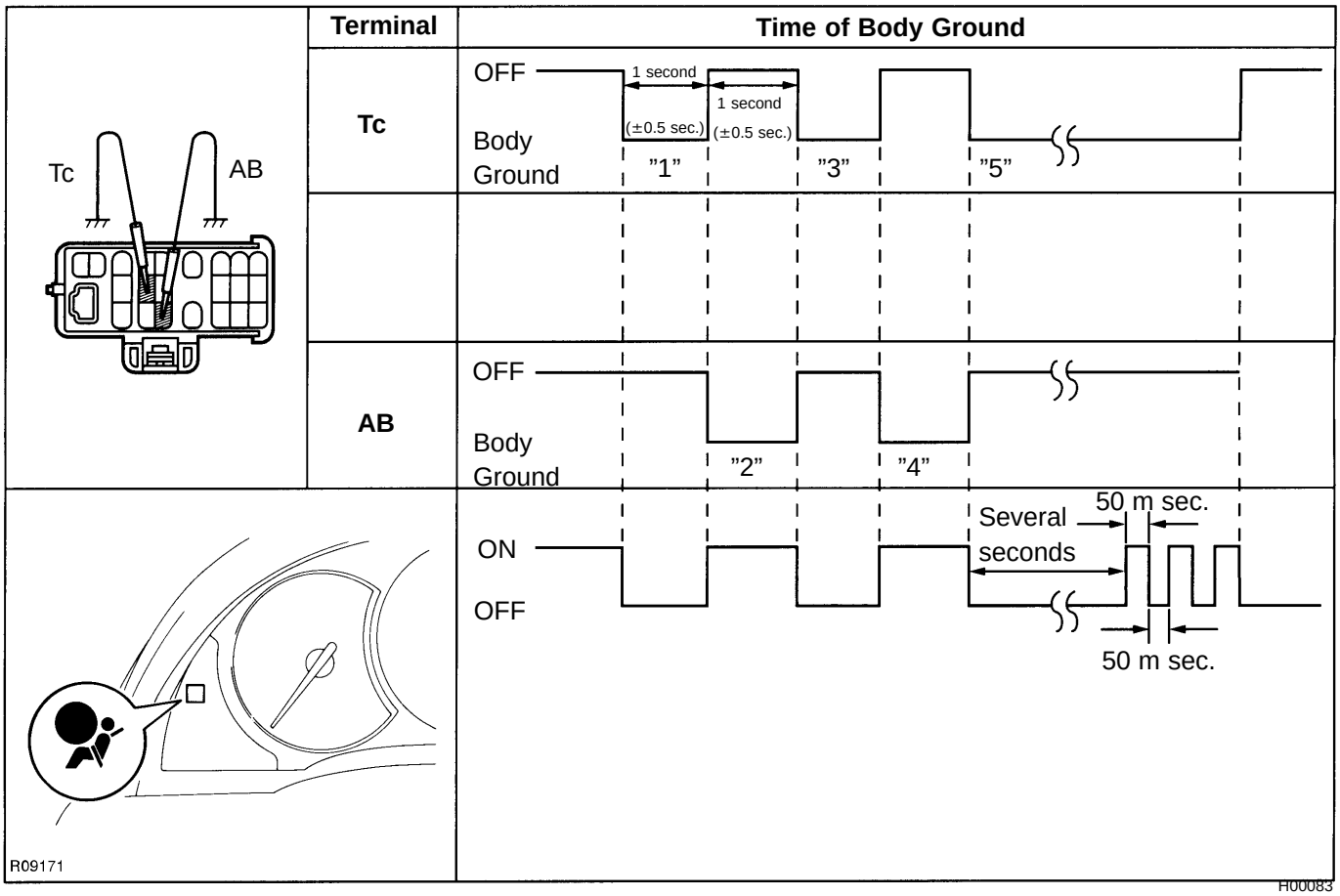

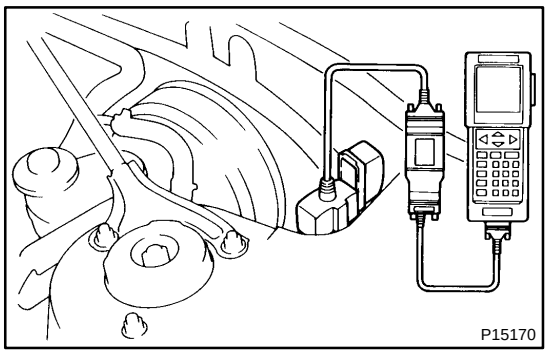

(d) Several seconds after doing the clearing procedure, the SRS warning light will blink in a 50 m sec. cycle to indicate the codes have been cleared.

5. DTC CHECK (TOYOTA hand-held tester)

(a) Hook up the TOYOTA hand-held tester to the DLC1.

(b) Clear the DTCs by following the prompts on the tester screen.

HINT:

Please refer to the TOYOTA hand-held tester operator's manual for further details.

6. RELEASE METHOD OF AIRBAG ACTIVATION PREVENTION MECHANISM

An airbag activation prevention mechanism is built into the connector for the squib circuit of the SRS. When release of the airbag activation prevention mechanism is directed in the troubleshooting procedure, as shown in the illustration of the connector ”1” and ”2” below, insert paper which is the same thickness as the male terminal, between the terminal and the short spring.

CAUTION:

NEVER RELEASE the airbag activation prevention mechanism on the steering wheel pad connector and front passenger airbag assembly connector.

NOTICE:

- **Do not release the airbag activation prevention mechanism unless specifically directed by the troubleshooting procedure.**
- **If the paper inserted is too thick the terminal and short spring may be damaged, so always use paper the same thickness as the male terminal.**

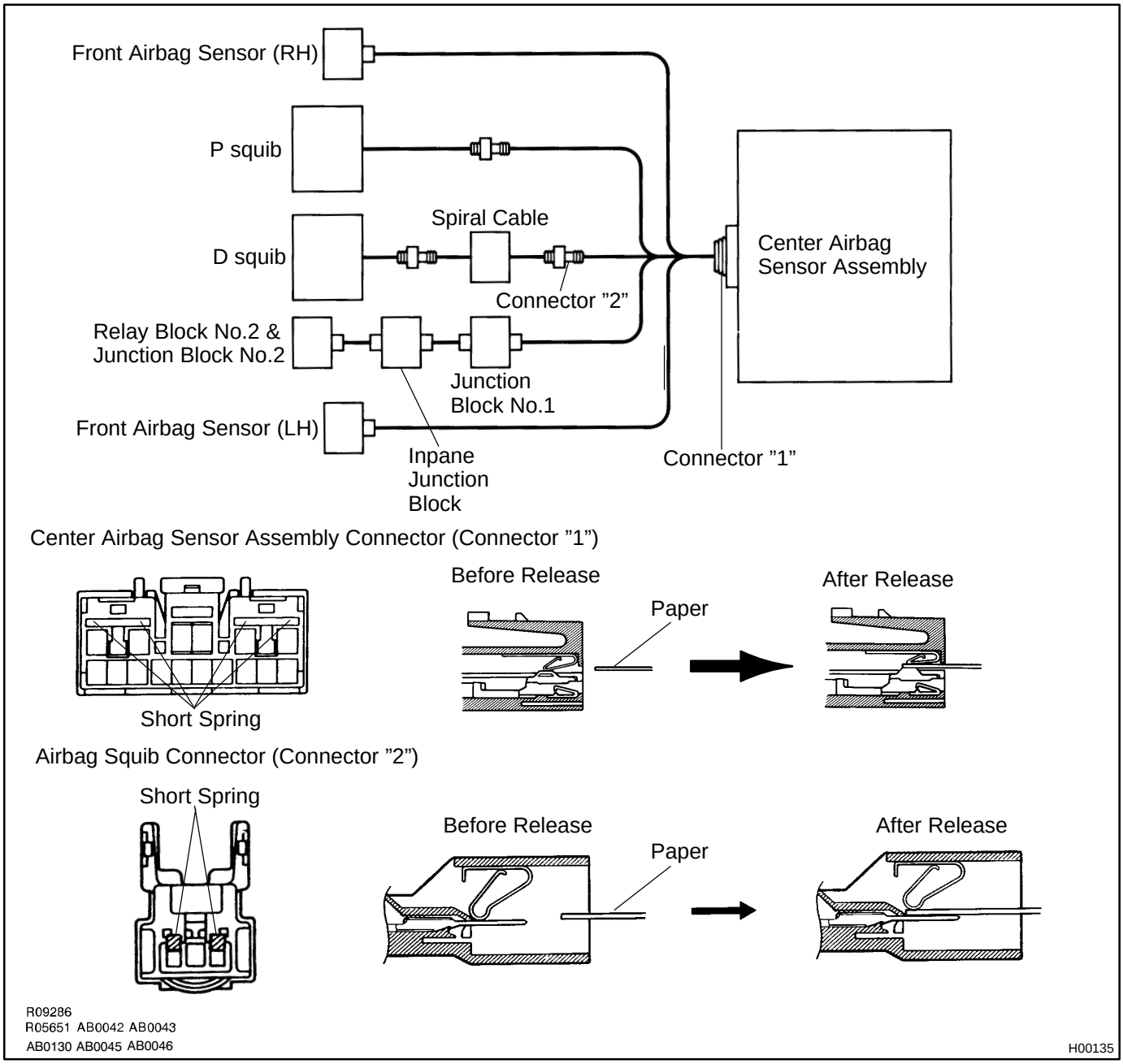

BE0ON-12

PROBLEM SYMPTOMS TABLE

IGNITION SWITCH AND KEY UNLOCK WARNING SWITCH

Symptom	Suspect Area	See page
Ignition switch is not set to each position.	1. Ignition Switch	BE-12
”Key unlock warning system” does not operate.	1. GAUGE Fuse (I/P J/B) 2. Key Unlock Warning Switch 3. Door Courtesy Switch 4. Wire Harness	- BE-12 BE-38 -

HEADLIGHT AND TAILLIGHT SYSTEM

USA:

Symptom	Suspect Area	See page
Headlight does not light.(Taillight is normal.)	1. HEAD Fuse (LH, RH) (J/B and R/B No.2) 2. Headlight Relay (J/B and R/B No.2) 3. Headlight Dimmer Switch 4. Light Control Switch 5. Integration Relay (I/P J/B) 6. Headlight Bulb 7. Wire Harness	- BE-15 BE-15 BE-15 BE-15 - -
Headlight does not light. (Taillight does not light up.)	1. Light Control Switch 2. Integration Relay (I/P J/B) 3. Headlight Bulb 4. Wire Harness	BE-15 BE-15 - -
Only one side light does not light.	1. HEAD Fuse (LH, RH) (J/B and R/B No.2) 2. Headlight Bulb 3. Wire Harness	- - -
”Lo-Beam” does not light.	1. Light Control Switch 2. Wire Harness	BE-15 -
”Hi-Beam” does not light.	1. Headlight Dimmer Switch 2. Wire Harness	BE-15 -
”Flash” does not light.	1. Headlight Dimmer Switch 2. Wire Harness	BE-15 -

CANADA:

Symptom	Suspect Area	See page
Headlight does not light.(Taillight is normal.)	1. Headlight Relay (J/B and R/B No.2) 2. D R LRelays (R/B No.6) 3. Headlight Dimmer Switch 4. Light Control Switch 5. Headlight Bulb 6. Wire Harness	BE-15 BE-15 BE-15 BE-15 - -
Headlight does not light. (Taillight does not light up.)	1. Light Control Switch 2. D R LRelays (R/B No.6) 3.Integration Relay (I/P J/B) 4. Wire Harness	BE-15 BE-15 BE-15 -
Only one side light does not light.	1. Headlight Bulb 2. Wire Harness	- -
”Lo-Beam” does not light. (ALL)	1. Headlight Dimmer Switch 2. D.R.L. Relays (R/B No.6) 3. Wire Harness	BE-15 BE-15 -

Symptom	Suspect Area	See page
”Lo-Beam” does not light. (ONE SIDE)	1. HEAD LO (LH) Fuse (J/B and R/B No.2) 2. HEAD LO (RH) Fuse (J/B and R/B No.2) 3. Headlight Bulb 4. Wire Harness	- - - -
”Hi-Beam” does not light. (ALL)	1. Headlight Dimmer Switch 2. D.R.L. Relays (R/B No.6) 3. Wire Harness	BE-15 BE-15 -
”Hi-Beam” does not light. (ONE SIDE)	1. HEAD HI (LH) Fuse (R/B No.6) 2. HEAD HI (RH) Fuse (R/B No.6) 3. Headlight Bulb 4. Wire Harness	- - - -
”Flash” does not light.	1. Headlight Dimmer Switch 2. D.R.L. Relays (R/B No.6) 3. Wire Harness	BE-15 BE-15 -
”Auto Turn-off System” does not operate	1. Integration Relay (I/P J/B) 2. GAUGE Fuse (I/P J/B) 3. D.R.L. Relays (R/B No.6) 4. Door Courtesy Switch (Driver’s) 5. Wire Harness	BE-15 - BE-15 BE-38 -
Headlight does not light with light control SW in HEAD.	1. Integration Relay (I/P J/B) 2. Light Control Switch 3. D.R.L. Relays (R/B No.6) 4. Wire Harness	BE-15 BE-15 BE-15 -
Headlight does not go out with light control SW in OFF.	1. Headlight Relay (J/B and R/B No.2) 2. D.R.L. Relays (R/B No.6) 3. Wire Harness	BE-15 BE-15 -
Taillight does not light with light control SW in TAIL.	1. Taillight Relay (I/P J/B) 2. Light Control Switch 3. D.R.L. Relays (R/B No.6)	BE-15 BE-15 BE-15
Taillight does not go out with light control SW in OFF.	1. Taillight Relay (I/P J/B) 2. D.R.L. Relays (R/B No.6) 3. Light Control Switch 4. Wire Harness	BE-15 BE-15 BE-15 -
Headlight and Taillight do not light with engine running and light control SW in OFF.	1. GAUGE Fuse (I/P J/B) 2. D.R.L. Relays (R/B No.6) 3. Generator L Terminal 4. Parking Brake Switch 5. Wire Harness	- BE-15 CH-13(*1) CH-12(*2) BE-38 -

(*1): 7A-FE
(*2): 5S-FE

FOG LIGHT SYSTEM

Symptom	Suspect Area	See page
Front fog light does not light with light control switch at HEAD. (Headlight is normal.)	1. FOG Fuse (I/P J/B) 2. Front Fog Light Relay 3. Front Fog Light Switch 4. Wire Harness	- BE-23 BE-23 -
Front fog light does not light with light control switch at HEAD. (Headlight does not light up.)	1. Headlight and Taillight System 2. Wire Harness	BE-15 -
Only one light does not light up.	1. Bulb 2. Wire Harness	- -

TURN SIGNAL AND HAZARD WARNING SYSTEM

Symptom	Suspect Area	See page
”Hazard” and ”Turn” do not light up.	1. Hazard Warning Switch 2. Turn Signal Flasher (R/B No.1) 3. Wire Harness	BE-26 BE-26 -
The flashing frequency is abnormal.	1. Bulb 2. Turn Signal Flasher (R/B No.1) 3. Wire Harness	- BE-26 -
Hazard warning light does not light up. (Turn is normal.)	1. HAZARD Fuse (J/B and R/B No.2) 2. Wire Harness	- -
Hazard warning light does not light up in one direction.	1. Hazard Warning Switch 2. Wire Harness	BE-26 -
Turn signal does not light up. (Combination meter, wiper and washer do not operate.)	1. Ignition Switch 2. TURN Fuse (I/P J/B) 3. Turn Signal Switch 4. Wire Harness	BE-12 - BE-26 -
Turn signal does not light up. (Combination meter, wiper and washer are normal.)	1. TURN Fuse (I/P J/B) 2. Turn Signal Switch 3. Wire Harness	- BE-26 -
Turn signal does not light up in one direction.	1. Turn Signal Switch 2. Wire Harness	BE-26 -
Only one bulb does not light up.	1. Bulb 2. Wire Harness	- -

BACK-UP LIGHT SYSTEM

Symptom	Suspect Area	See page
Back-up light does not light up.	1. GAUGE Fuse (I/P J/B) 2. Back-up Light Switch (M/X) 3. Park/Neutral Position Switch (A/X) 4. Bulb 5. Wire Harness	- BE-28 DI-248 (*3) DI-293 (*4) - -
Back-up light remains always ON.	1. Wire Harness	-
Only one light does not light up.	1. Bulb 2. Wire Harness	- -

(*3): A140E
(*4): A246E

STOP LIGHT SYSTEM

Symptom	Suspect Area	See page
Stop light does not light up.	1. STOP Fuse (I/P J/B) 2. Stop Light Switch 3. Bulb 4. Wire Harness	- BE-30 - -
Stop light remains always ON.	1. Stop Light Switch 2. Wire Harness	BE-30 -
Only one light does not light up.	1. Bulb 2. Wire Harness	- -

INTERIOR LIGHT SYSTEM

Symptom	Suspect Area	See page
Only one light does not light up.	1. Bulb 2. Wire Harness	- -
Rear interior light does not light up.	1. Bulb 2. DOME Fuse (I/P J/B) 3. Luggage Compartment Courtesy Switch 4. Wire Harness	- - BE-38 -

WIPER AND WASHER SYSTEM

Symptom	Suspect Area	See page
Wipers and washers do not operate.	1. WIPER Fuse (I/P J/B) 2. Ignition Switch 3. Wiper and Washer Switch 4. Wire Harness	- BE-12 BE-32 -
Front wiper does not operate.	1. Front Wiper and Washer Switch 2. Front Wiper Motor 3. Wire Harness	BE-32 BE-32 -
Rear wiper does not operate.	1. Rear Wiper and Washer Switch 2. Rear Wiper Motor and Relay 3. Wire Harness	BE-32 BE-32 -
Front washer does not operate.	1. Front Wiper and Washer Switch 2. Washer Motor 3. Wire Harness	BE-32 BE-32 -
Rear washer does not operate.	1. Rear Wiper and Washer Switch 2. Washer Motor 3. Wire Harness	BE-32 BE-32 -

COMBINATION METER (METER, GAUGES AND ILLUMINATION)

Symptom	Suspect Area	See page
Tachometer, fuel gauge and engine coolant temperature gauge do not operate.	1. GAUGE Fuse (I/P J/B) 2. Meter Circuit 3. Wire Harness	- BE-37 -
Speedometer does not operate.	1. Vehicle Speed Sensor 2. Meter Circuit 3. Wire Harness	BE-38 BE-37 -
Tachometer does not operate.	1. Igniter 2. ECM 3. Meter Circuit 4. Wire Harness	IG-1(*1) IG-1(*2) DI-18 (*1) DI-125 (*2) BE-37 -
Fuel gauge does not operate or abnormal operation.	1. Fuel Receiver Gauge 2. Fuel Sender Gauge 3. Meter Circuit 4. Wire Harness	BE-38 BE-38 BE-37 -
Engine coolant temperature gauge does not operate or abnormal operation.	1. Engine Coolant Temperature Receiver Gauge 2. Engine Coolant Temperature Sender Gauge 3. Meter Circuit 4. Wire Harness	BE-38 BE-38 BE-37 -

All illumination lights do not light up.	1. TAIL Fuse (I/P J/B) 2. Light Control Rheostat 3. Meter Circuit 4. Wire Harness	- BE-38 BE-37 -
Only one illumination light does not light up.	1. Bulb 2. Meter Circuit	- BE-37

(*1): 7A-FE
(*2): 5S-FE

WARNING LIGHTS:

Symptom	Suspect Area	See page
Warning lights do not light up. (Except discharge and door open.)	1. Bulb 2. IGN Fuse (I/P J/B) 3. Ignition Switch 4. Meter Circuit 5. Generator 6. Wire Harness	- - BE-12 BE-37 CH-13(*1) CH-12(*2) -
Brake warning Light does not light up.	1. Bulb 2. Brake Fluid Level Warning Switch 3. Parking Brake Switch 4. Bulb Check Relay 5. Meter Circuit 6. Wire Harness	- BE-38 BE-38 - BE-37 -
Seat belt warning light does not light up.	1. Bulb 2. Seat Belt Buckle Switch 3. Integration Relay (I/P J/B) 4. Meter Circuit 5. Wire Harness	- BE-38 BE-15 BE-37 -
Low oil pressure warning light does not light up.	1. Bulb 2. Low Oil Pressure Warning Switch 3. Meter Circuit 4. Wire Harness	- BE-38 BE-37 -
Door open warning light does not light up.	1. Bulb 2. DOME Fuse (J/B and R/B No.2) 3. Door Courtesy Switch 4. Luggage Room Light Switch 5. Integration Relay (I/P J/B) 6. Meter Circuit 7. Wire Harness	- - BE-38 BE-38 BE-15 BE-37 -

(*1): 7A-FE
(*2): 5S-FE

INDICATOR LIGHTS:

Symptom	Suspect Area	See page
SRS indicator light does not light up.	1. Bulb 2. Center Airbag Sensor Assembly 3. Wire Harness	- RS-34 -
ABS indicator light does not light up.	1. Bulb 2. Wire Harness	- -
Malfunction indicator light does not light up.	1. Bulb 2. ECM 3. Wire Harness	- DI-18 (*1) DI-125 (*2) -

A/T shift position indicator light does not light up.	1. Bulb 2. Park/Neutral Position Switch 3. Light Control Rheostat 4. Meter Circuit 5. Wire Harness	- DI-248 (*3) DI-293 (*4) BE-38 BE-37 -
O/D OFF indicator light does not light up.	1. Bulb 2. O/D Main Switch 3. ECM 4. Meter Circuit 5. Wire Harness	- DI-253 (*3) DI-297 (*4) DI-18 (*1) DI-125 (*2) BE-37 -
Turn indicator light does not light up.	1. Bulb 2. Turn Signal and Hazard Warning System 3. Meter Circuit 4. Wire Harness	- BE-26 BE-37 -
High beam indicator light does not light up.	1. Bulb 2. Headlight and Taillight System 3. Meter Circuit 4. Wire Harness	- BE-15 BE-37 -
CRUISE indicator light does not light up.	1. Bulb 2. Cruise Control ECU 3. Meter Circuit 4. Wire Harness	- DI-419 BE-37 -

(*1): 7A-FE
(*2): 5S-FE
(*3): A140E
(*4): A246E

ELECTRIC TENSION REDUCER SYSTEM

Symptom	Suspect Area	See page
Tension reducer does not operate. (Driver's and Passenger's.)	1. GAUGE Fuse (I/P J/B) 2. Wire Harness	- -
Tension reducer does not operate. (Only one side.)	1. Buckle Switch 2. Tension Reducer Solenoid 3. Wire Harness	BE-46 BE-46 -

DEFOGGER SYSTEM

Symptom	Suspect Area	See page
All defogger systems do not operate.	1. HTR Fuse (I/P J/B) 2. DEF Fuse (I/P J/B) 3. Defogger Relay (I/P J/B) 4. Defogger Switch 5. Wire Harness	- - BE-48 BE-48 -
Rear window defogger does not operate.	1. Defogger Wires 2. Wire Harness	BE-48 -

POWER WINDOW CONTROL SYSTEM

Symptom	Suspect Area	See page
Power window does not operate.	1. POWER Fuse (I/P J/B) 2. GAUGE Fuse (I/P J/B) 3. Power Main Relay (I/P J/B) 4. Ignition Switch 5. Power Window Master Switch 6. Wire Harness	- - BE-51 BE-12 BE-51 -
”One touch power window system” does not operate.	1. Power Window Master Switch	BE-51
Only one window glass does not move.	1. Power Window Master Switch 2. Power Window Switch 3. Power Window Motor 4. Wire Harness	BE-51 BE-51 BE-51 -
”Window lock system” does not operate.	1. Power Window Master Switch	BE-51
Illumination does not light up.	1. Power Window Master Switch	BE-51

POWER DOOR LOCK CONTROL SYSTEM

Symptom	Suspect Area	See page
”Door lock control system” does not operate.(ALL)	1. Door Lock Control Relay 2. DOOR Fuse (I/P J/B) 3. GAUGE Fuse (I/P J/B) 4. Wire Harness 5. Other Parts	BE-56 - - - -
Malfunction in Door Lock / Unlock. (Using door manual switch.)	1. Door Lock Control Switch 2. Door Lock Control Relay 3. Wire Harness 4. Other Parts	BE-56 BE-56 - -
Malfunction in Door Lock / Unlock. (Using door manual switch and key.)	1. Wire Harness 2. Other Parts	- -
Malfunction in Door Lock / Unlock. (Using key.)	1. Door Unlock Detection Switch 2. Door Lock Control Relay 3. Wire Harness 4. Other Parts	BE-56 BE-56 - -
Fault in 2 - Operation unlock function of driver’s side door key lock and unlock switch.	1. Door Unlock Detection Switch 2. Door Lock Control Relay 3. Wire Harness 4. Other Parts	BE-56 BE-56 - -
Fault in key confine prevention operation.	1. Door Unlock Detection Switch 2. Door Courtesy Switch 3. Door Lock Control Switch 4. Door Lock Control Relay 5. Wire Harness 6. Other Parts	BE-56 BE-38 BE-56 BE-56 - -
Only one door lock does not operate.	1. Door Lock Motor 2. Wire Harness	BE-56 -

SLIDING ROOF SYSTEM

Symptom	Suspect Area	See page
Sliding roof system does not operate. (Door lock does not operate.)	1. DOOR Fuse (I/P J/B) 2. Ignition Switch 3. Door Lock Control Relay 4. Wire Harness	- BE-12 BE-56 -
Sliding roof system does not operate. (Door lock is normal.)	1. GAUGE Fuse (I/P J/B) 2. POWER Fuse (I/P J/B) 3. Door Lock Control Relay 4. Sliding Roof Control Relay 5. Sliding Roof Switch 6. Sliding Roof Motor 7. Wire Harness	- - BE-56 BE-60 BE-60 BE-60 -
Sliding roof system operates abnormally.	1. Sliding Roof Control Relay 2. Limit Switch 3. Sliding Roof Switch 4. Wire Harness	BE-60 BE-60 BE-60 -
Sliding roof system stops operation half way.	1. Sliding Roof Control Relay 2. Limit Switch 3. Sliding Roof Switch 4. Sliding Roof Motor	BE-60 BE-60 BE-60 BE-60
”Key-off Sliding Roof” operation does not operate.	1. POWER Fuse (I/P J/B) 2. Door Lock Control Relay 3. GAUGE Fuse (I/P J/B) 4. Ignition Switch 5. Door Courtesy Switch 6. Wire Harness	- BE-56 - BE-12 BE-38 -

POWER MIRROR CONTROL SYSTEM

Symptom	Suspect Area	See page
Mirror does not operate.	1. CIG & RAD Fuse (I/P J/B) 2. Mirror Switch 3. Mirror Motor	- BE-64 BE-64
Mirror operates abnormally.	1. Mirror Switch 2. Mirror Motor 3. Wire Harness	BE-64 BE-64 -

DI54O-01

PROBLEM SYMPTOMS TABLE

If a normal code is displayed during the DTC check but the trouble still occurs (reappears), troubleshoot for each problem symptom, checking the circuits for each symptom in the order given in the table below. Proceed to the page indicated for each circuit.

HINT:

- If the instruction "Proceed to next circuit inspection shown on matrix chart" is given in the flow chart for each circuit, proceed to the circuit with the next highest number in the table to continue the check.
- If the trouble still reappears even though there are no abnormalities in any of the other circuits, then check or replace the cruise control ECU as the last step.

Symptom	Suspect Area	See page
SET not occurring or CANCEL occurring. (DTC is Normal)	1. Main Switch Circuit (Cruise Control Switch) 2. Vehicle Speed Sensor Circuit 3. Control Switch Circuit (Cruise Control Switch) 4. Stop Light Switch Circuit 5. Park/Neutral Position Switch Circuit 6. Clutch Switch Circuit 7. Actuator 8. Cruse Control ECU	DI-457 DI-431 DI-434 DI-437 DI-446 DI-449 DI-423 DI-425 DI-428 IN-28
SET not occurring or CANCEL occurring. (DTC does not output)	1. ECU Power Source Circuit 2. Cruise Control ECU	DI-452 IN-28
Actual vehicle speed deviates above or below the set speed.	1. Actuator Control Cable 2. Vehicle Speed Sensor Circuit 3. Actuator 4. Cruise Control ECU 5. Idle Switch Circuit (main throttle position sensor)	DI-462 DI-431 DI-423 DI-425 DI-428 DI-440 IN-28
Gear shifting frequent between 3rd and O/D when driving on uphill road. (Hurting)	1. Electronically Controlled Transaxle Communication Circuit 2. Cruise Control ECU	DI-443 IN-28
Cruise control not cancelled, even when brake pedal is depressed.	1. Actuator Control Cable 2. Stop Light Switch Circuit 3. Actuator 4. Cruise Control ECU	DI-462 DI-437 DI-423 DI-425 DI-428 IN-28
Cruise control not cancelled, even when transmission is shifted to except D position. (A/T)	1. Actuator Control Cable 2. Park/Neutral Position Switch Circuit 3. Actuator 4. Cruise Control ECU	DI-462 DI-446 DI-423 DI-425 DI-428 IN-28
Cruise control not cancelled, even when clutch pedal depressed. (M/T)	1. Actuator Control Cable 2. Clutch Switch Circuit 3. Actuator 4. Cruise Control ECU	DI-462 DI-449 DI-423 DI-425 DI-428 IN-28

Control switch does not operate. (SET/COAST, ACC/RES, CANCEL not possible)	1. Actuator Control Cable 2. Control Switch Circuit (Cruise Control Switch) 3. Actuator 4. Cruise Control ECU	DI-462 DI-434 DI-423 DI-425 DI-428 IN-28
SET possible at 40 km/h (25 mph) or less, or CANCEL does not operate at 40 km/h (25 mph) or less.	1. Actuator Control Cable 2. Vehicle Speed Sensor Circuit 3. Actuator 4. Cruise Control ECU	DI-462 DI-431 DI-423 DI-425 DI-428 IN-28
Poor response is ACCEL and RESUME modes.	1. Actuator Control Cable 2. Electronically Controlled Transaxle Communication Circuit 3. Control Switch Circuit (Cruise Control Switch) 4. Actuator	DI-462 DI-443 DI-434 DI-423 DI-425 DI-428
O/D does not RESUME, even though the road is not uphill.	1. Electronically Controlled Transaxle Communication Circuit 2. Cruise Control ECU	DI-443 IN-28
DTC memory is erased.	1. Back-up Power Source Circuit 2. Cruise Control ECU	DI-455 IN-28
DTC is not output, or is output when is should not be.	1. Cruise Control ECU	IN-28
Cruise MAIN indicator light remains ON or fall to light up.	Combination meter troubleshooting	BE-2

DI51O-01

PROBLEM SYMPTOMS TABLE

When the malfunction code is not confirmed the DTC check and the problem still can not be confirmed in the basic inspection, then proceed to this step and perform troubleshooting according to the numbered order given in the table below.

Symptom	Suspect Area	See page
Does not start (Engine does not crank)	1. Starter and starter relay	IN-28
Does not start (No combustion)	1. ECM power source circuit 2. Fuel pump control circuit 3. Engine control module (ECM)	DI-203 DI-206 IN-28
Does not start (No complete combustion)	1. Fuel pump control circuit	DI-206
Difficult to start (Engine cranks normally)	1. Starter signal circuit 2. Fuel pump control circuit 3. Compression	DI-196 DI-206 IN-28
Difficult to start (Cold engine)	1. Starter signal circuit 2. Fuel pump control circuit	DI-196 DI-206
Difficult to start (Hot engine)	1. Starter signal circuit 2. Fuel pump control circuit	DI-196 DI-206
Poor idling (High engine idle speed)	1. A/C signal circuit 2. ECM power source circuit	AC-85 DI-203
Poor idling (Low engine idle speed)	1. A/C signal circuit 2. Fuel pump control circuit	AC-85 DI-206
Poor idling (Rough idling)	1. Compression 2. Fuel pump control circuit	EM-3 DI-206
Poor idling (Hunting)	1. ECM power source circuit 2. Fuel pump control circuit	DI-203 DI-206
Poor driveability (Hesitation/Poor acceleration)	1. Fuel pump control circuit 2. A/T faulty 3. A/C cut control circuit	DI-206 DI-260 DI-214
Poor driveability (Surging)	1. Fuel pump control circuit	DI-206
Engine stall (Soon after starting)	1. Fuel pump control circuit	DI-206
Engine stall (During A/C operation)	1. A/C signal circuit 2. Engine control module (ECM)	AC-85 IN-28

DI50L-02

PROBLEM SYMPTOMS TABLE

When the malfunction code is not confirmed in the DTC check and the problem still can not be confirmed in the basic inspection, then proceed to this step and perform troubleshooting according to the numbered order given in the table below.

Symptom	Suspect Area	See page
Does not start (Engine does not crank)	1. Starter 2. Starter relay	ST-2 ST-17
Does not start (No initial combustion)	1. ECM power source circuit 2. Fuel pump control circuit 3. Engine control module (ECM)	DI-96 DI-99 IN-28
Does not start (No complete combustion)	1. Fuel pump control circuit	DI-99
Difficult to start (Engine cranks normally)	1. Starter signal circuit 2. Fuel pump control circuit 3. Compression	DI-89 DI-99 EM-3
Difficult to start (Cold engine)	1. Starter signal circuit 2. Fuel pump control circuit	DI-89 DI-99
Difficult to start (Hot engine)	1. Starter signal circuit 2. Fuel pump control circuit	DI-89 DI-99
Poor idling (High engine idle speed)	1. A/C switch circuit 2. ECM power source circuit	AC-80 DI-96
Poor idling (Low engine idle speed)	1. A/C switch circuit 2. Fuel pump control circuit	AC-85 DI-99
Poor idling (Rough idling)	1. Compression 2. Fuel pump control circuit	EM-3 DI-99
Poor idling (Hunting)	1. ECM power source circuit 2. Fuel pump control circuit	DI-96 DI-99
Poor driveability (Hesitation/Poor acceleration)	1. Fuel pump control circuit 2. A/T faulty 3. A/C cut control circuit	DI-99 DI-276 DI-105
Poor driveability (Surging)	1. Fuel pump control circuit	DI-99
Engine stall (Soon after starting)	1. Fuel pump control circuit	DI-99
Engine stall (During A/C operation)	1. A/C switch circuit 2. Engine control module (ECM)	AC-80 IN-28

DI52P-02

PROBLEM SYMPTOMS TABLE

If a normal code is displayed during the DTC check but the trouble still occurs, check the circuits for each symptom in the order given in the charts on the following pages and proceed to the page given for trouble-shooting.

The Matrix Chart is divided into 3 chapters.

Chapter 1: Electronic Circuit Matrix Chart
Chapter 2: On-vehicle Repair Matrix Chart
Chapter 3: Off-vehicle Repair Matrix Chart

When troubleshooting, check Chapter 1 first. If instructions given in Chapter 1 are proceed to Chapter 2 0r 3, proceed as instructed.

- If the instruction ”Proceed to next circuit inspection shown on matrix chart” is given in the flow chart for each circuit, proceed to the circuit with the next highest number in the table to continue the check.
- If the trouble still occurs even though there are no abnormalities in any of the other circuits, then check or replace the ECM.

Chapter 1: Electronic Circuit Matrix Chart

Symptom	Suspect Area	See page
No up-shift (A particular gear, from 1st to 3rd gear, is not up-shifted)	1. ECM	DI-232
No up-shift (3rd → O/D)	1. O/D main switch circuit & O/D OFF indicator light circuit 2. O/D cancel signal circuit 3. ECM	DI-253 DI-251 DI-232
No down-shift (O/D → 3rd)	1. O/D main switch circuit & O/D OFF indicator light circuit 2. O/D cancel signal circuit 3. ECM	DI-253 DI-251 DI-232
No down-shift (A particular gear, from 1st to 3rd gear, is not down-shifted)	1. ECM	DI-232
No lock-up	1. Stop light switch circuit 2. ECM	DI-257 DI-232
No lock-up off	1. ECM	DI-232
Shift point too high or too low	1. ECM	DI-232
Up-shift to O/D from 3rd while O/D main switch is OFF	1. O/D main switch circuit & O/D OFF indicator light circuit 2. ECM	DI-253 DI-232
Up-shift to O/D from 3rd while engine is cold	1. ECM	DI-232
No kick-down	1. ECM	DI-232
Engine stalls when starting off or stopping	1. ECM	DI-232

Chapter 2: On-Vehicle Repair
(★: A140E AUTOMATIC TRANSAXLE Repair Manual Pub. No. RM385U)

Symptom	Suspect Area	See page
Vehicle does not move in R position	1. 1-2 shift valve 2. 2-3 shift valve 3. Off-vehicle repair matrix chart	★ ★ DI-233
Vehicle does not move in any forward position or reverse position	1. Manual valve 2. Primary regulator valve 3. Off-vehicle repair matrix chart	★ ★ DI-233
No lock-up	1. Lock-up relay valve 2. Off-vehicle repair matrix chart	★ DI-233
No lock-up OFF	1. Lock-up relay valve 2. Off-vehicle repair matrix chart	★ DI-233
No kick-up down	1. 1-2 shift valve 2. 2-3 shift valve 3. 3-4 shift valve	★ ★ ★
No engine braking (1st)	1. Low modulator valve 2. Off-vehicle repair matrix chart	★ DI-233
No engine braking (2nd)	1. 2nd modulator valve 2. Off-vehicle repair matrix chart	★ DI-233
No up-shift (1st → 2nd)	1. 1-2 shift valve 2. Off-vehicle repair matrix chart	★ DI-233
No up-shift (3rd → 2nd)	1. 2-3 shift valve 2. Off-vehicle repair matrix chart	★ DI-233
No up-shift (3rd → O/D)	1. 3-4 shift valve 2. Off-vehicle repair matrix chart	★ DI-233
No down-shift (O/D → 3rd)	1. 3-4 shift valve	★
No down-shift (3rd → 2nd)	1. 2-3 shift valve	★
No down-shift (2nd → 1st)	1. 1-2 shift valve 2. Off-vehicle repair matrix chart	★ DI-233
Harsh engagement (N → R)	1. Accumulator control valve 2. C_2 accumulator 3. Throttle valve 4. Off-vehicle repair matrix chart	★ ★ ★ DI-233
Harsh engagement (N → D)	1. Accumulator control valve 2. C_1 accumulator 3. Throttle valve 4. Off-vehicle repair matrix chart	★ ★ ★ DI-233
Harsh engagement (N → L)	1. Accumulator control valve 2. C_1 accumulator 3. Throttle valve 4. Off-vehicle repair matrix chart	★ ★ ★ DI-233
Harsh engagement (1st → 2nd: D position)	1. B_2 accumulator 2. Off-vehicle repair matrix chart	★ DI-233
Harsh engagement (1st → 2nd: 2 position)	1. B_2 accumulator 2. 2nd modulator valve 3. Off-vehicle repair matrix chart	★ ★ DI-233
Harsh engagement (1st → 2nd → 3rd)	1. Accumulator control valve 2. Throttle modulator valve 3. Throttle valve 4. Cut back valve	★ ★ ★ ★

Harsh engagement (1st → 2nd → 3rd → O/D)	1. Accumulator control valve 2. Throttle modulator valve 3. Throttle valve 4. Cut back valve	★ ★ ★ ★
Harsh engagement (2nd → 3rd)	1. C_2 accumulator	★
Harsh engagement (3rd → O/D)	1. Off-vehicle repair matrix chart	★
Harsh engagement (O/D → 3rd)	1. C_0 accumulator	★
Harsh engagement (3rd → 2nd)	1. C_2 accumulator	★
Slip or shudder in forward and reverse (directly after E/G start)	1. Throttle valve 2. Oil strainer 3. Off-vehicle repair matrix chart	★ ★ ★

Chapter 3: Off-Vehicle Repair
(★: A140E AUTOMATIC TRANSAXLE Repair Manual Pub. No. RM385U)

Symptom	Suspect Area	See page
Vehicle does not move in any forward position	1. C_1 Forward clutch 2. F_2 No.2 one-way clutch 3. B_3 1st and reverse brake 4. B_1 2nd coast brake 5. B_2 2nd brake 6. C_2 Direct clutch	★ ★ ★ ★ ★ ★
Vehicle does not move in reverse position	1. B_1 2nd coast brake 2. Front planetary gear 3. Rear planetary gear 4. C_2 Direct clutch 5. C_0 O/D direct clutch 6. B_3 1st and reverse brake	★ ★ ★ ★ ★ ★
Vehicle does not move in any forward position and reverse position	1. Parking lock pawl 2. F_0 O/D one-way clutch 3. C_0 O/D direct clutch 4. B_0 O/D brake 5. Front planetary gear 6. Rear planetary gear 7. O/D planetary gear	★ ★ ★ ★ ★ ★ ★
No lock-up	1. Torque converter clutch	AX-20
No lock-up OFF	1. Torque converter clutch	AX-20
Large shock during lock-up	1. Torque converter clutch	AX-20
E/G stalls when starting off and stopping	1. Torque converter clutch	AX-20
No up-shift (1st → 2nd)	1. B_2 2nd brake 2. F_1 No.1 one-way clutch	★ ★
No up-shift (2nd → 3rd)	1. C_2 Direct clutch	★
No up-shift (3rd → O/D)	1. B_0 O/D brake	★
No down shift (2nd → 1st)	1. B_1 2nd coast brake	★
Harsh engagement (N → R)	1. C_2 Direct clutch 2. B_3 1st and reverse brake	★ ★
Harsh engagement (N → D)	1. C_1 Forward clutch	★
Harsh engagement (N → L)	1. B_3 1st and reverse brake 2. C_1 Forward clutch	★ ★
Harsh engagement (1st → 2nd: D position)	1. B_2 2nd brake	★
Harsh engagement (1st → 2nd: 2 position)	1. B_1 2nd coast brake 2. B_2 2nd brake	★ ★
Harsh engagement (2nd → 3rd)	1. C_2 Direct clutch	★
Harsh engagement (3nd → O/D)	1. B_0 O/D brake	★
Slip or shudder (Forward and reverse: After warm-up)	1. Torque converter clutch 2. F_1 No.1 one-way clutch 3. C_0 O/D direct clutch	AX-20 ★ ★
Slip or shudder (Forward and reverse: Directly after E/G start)	1. Torque converter clutch	AX-20
Slip or shudder (R position)	1. C_2 Direct clutch 2. C_0 O/D direct clutch 3. F_0 O/D one-way clutch	★ ★ ★
Slip or shudder (1st)	1. C_1 Forward clutch 2. F_2 No.2 one-way clutch	★ ★

Slip or shudder (2nd)	1. B_2 2nd brake 2. F_1 No.1 one-way clutch	★ ★
Slip or shudder (2nd → 3rd: Up shift)	1. C_2 Direct clutch	★
Slip or shudder (3rd)	1. C_2 Direct clutch	★
Slip or shudder (O/D)	1. B_0 O/D brake	★
No engine braking (1st - 3rd)	1. C_0 O/D direct clutch	★
No engine braking (1st)	1. B_3 1st and reverse brake	★
No engine braking (2nd)	1. B_1 2nd coast brake	★
Poor acceleration (All position)	1. Torque converter clutch	AX-20
Poor acceleration (O/D)	1. C_0 O/D direct clutch 2. O/D planetary gear	★ ★
Poor acceleration (Other than O/D)	1. B_0 O/D brake 2. O/D planetary gear	★ ★
Poor acceleration (Other than 2nd)	1. B_1 2nd coast brake 2. B_2 2nd brake	★ ★
Poor acceleration (1st and 2nd)	1. B_0 O/D brake	★
Poor acceleration (1st and R position)	1. B_3 1st and reverse brake	★
Poor acceleration (R position)	1. C_1 Forward clutch	★

DI535-03

PROBLEM SYMPTOMS TABLE

If a normal code is displayed during the diagnostic trouble code check but the trouble still occurs, check the circuits for each symptom in the order given in the charts on the following pages and proceed to the page given for troubleshooting.

The Matrix Chart is divided into 3 chapters.

Chapter 1: Electronic Circuit Matrix Chart
Chapter 2: On-vehicle Repair Matrix Chart
Chapter 3: Off-vehicle Repair Matrix Chart

When troubleshooting, check Chapter 1 first. If instructions are given in Chapter 1 to proceed to Chapter 2 or 3, proceed as instructed.

- If the instruction "Proceed to next circuit inspection shown on matrix chart" is given in the flow chart for each circuit, proceed to the circuit with the next highest number in the table to continue the check.
- If the trouble still occurs even though there are no abnormalities in any of the other circuits, then check and replace the ECM.

Chapter 1: Electronic Circuit Matrix Chart

Symptom	Suspect Area	See page
No up-shift (A particular gear, from 1st to 3rd gear, is not up-shifted)	1. ECM	DI-275
No up-shift (3rd → O/D)	1. O/D main switch circuit & O/D OFF indicator light circuit 2. O/D cancel signal circuit 3. ECM	DI-297 DI-301 DI-275
No down-shift (O/D → 3rd)	1. O/D main switch circuit & O/D OFF indicator light circuit 2. O/D cancel signal circuit 3. ECM	DI-297 DI-301 DI-275
No down-shift (A particular gear, from 1st to 3rd gear, is not down-shifted)	1. ECM	DI-275
No lock-up	1. Stop light switch circuit 2. ECM	DI-303 DI-275
No lock-up off	1. ECM	DI-275
Shift point too high or too low	1. ECM	DI-275
Up-shift to O/D from 3rd while O/D main switch is OFF	1. O/D main switch circuit & O/D OFF indicator light circuit 2. ECM	DI-297 DI-275
Up-shift to O/D from 3rd while engine is cold	1. ECM	DI-275
No kick-down	1. ECM	DI-275
Engine stalls when starting off or stopping	1. ECM	DI-275

Chapter 2: On-Vehicle Repair
(★: A246E AUTOMATIC TRANSAXLE Repair Manual Pub. No. RM390U)

Symptom	Suspect Area	See page
Does not move in any forward position	1. Off-vehicle repair matrix chart	DI-276
Does not move in any reverse position	1. Off-vehicle repair matrix chart	DI-276
Does not move in any position	1. Primary regulator valve 2. Manual valve 3. Throttle valve 4. Off-vehicle repair matrix chart	★ ★ ★ DI-276
No up-shift (1st → 2nd)	1. 1-2 shift valve 2. Off-vehicle repair matrix chart	★ DI-276
No up-shift (2nd → 3rd)	1. 2-3 shift valve 2. Off-vehicle repair matrix chart	★ DI-276
No up-shift (3rd → O/D)	1. 3-4 shift valve 2. Off-vehicle repair matrix chart	★ DI-276
No down-shift (O/D → 3rd)	1. 3-4 shift valve 2. Off-vehicle repair matrix chart	★ DI-276
No down-shift (3rd → 2nd)	1. 2-3 shift valve 2. Off-vehicle repair matrix chart	★ DI-276
No down-shift (2nd → 1st)	1. 1-2 shift valve 2. Off-vehicle repair matrix chart	★ DI-276
Harsh engagement (N → R)	1. C_2 accumulator 3. Off-vehicle repair matrix chart	★ DI-276
Harsh engagement (N → D)	1. C_1 accumulator 2. Off-vehicle repair matrix chart	★ DI-276
Harsh engagement (N → L)	1. C_1 accumulator 2. Low coast modulator valve 3. Off-vehicle repair matrix chart	★ ★ DI-276
Harsh engagement (1st → 2nd: D position)	1. Accumulator control valve 2. B_2 accumulator 3. Off-vehicle repair matrix chart	★ ★ DI-276
Harsh engagement (1st → 2nd: 2 position)	1. B_2 accumulator 2. Accumulator control valve 3. 2nd coast modulator valve 4. Off-vehicle repair matrix chart	★ ★ ★ DI-276
Harsh engagement (1st → 2nd → 3rd → O/D)	1. Throttle valve 2. Primary regulator valve	★ ★
Harsh engagement (2nd → 3rd)	1. C_2 accumulator 2. Accumulator control valve 3. Off-vehicle repair matrix chart	★ ★ DI-276
Harsh engagement (3rd → O/D)	1. B_2 accumulator 2. C_3 accumulator 3. Off-vehicle repair matrix chart	★ ★ DI-276
Harsh engagement (O/D → 3rd)	1. B_4 accumulator 2. Off-vehicle repair matrix chart	★ DI-276
Harsh engagement (3rd → 2nd)	1. C_2 accumulator 2. Off-vehicle repair matrix chart	★ DI-276
Slip (Forward & reverse)	1. Primary regulator valve 2. Off-vehicle repair matrix chart	★ DI-276
Slip (R position)	1. Off-vehicle repair matrix chart	DI-276
Slip (1st position)	1. Off-vehicle repair matrix chart	DI-276

Slip (2nd position)	1. Off-vehicle repair matrix chart	DI-276
Slip (3rd position)	1. Off-vehicle repair matrix chart	DI-276
Slip (O/D position)	1. Off-vehicle repair matrix chart	DI-276
No engine braking (1st: L position)	1. Low coast modulator valve 2. Off-vehicle repair matrix chart	★ DI-276
No engine braking (2nd: 2 position)	1. 2nd coast modulator valve 2. Off-vehicle repair matrix chart	★ DI-276
No kick-down	1. 1-2 shift valve 2. 2-3 shift valve 3. 3-4 shift valve	★ ★ ★
Poor acceleration	1. Primary regulator valve 2. Off-vehicle repair matrix chart	★ DI-276
No lock-up	1. Lock-up relay valve 2. Off-vehicle repair matrix chart	★ DI-276

Chapter 3: Off-Vehicle Repair
(★: A246E AUTOMATIC TRANSAXLE Repair Manual Pub. No. RM390U)

Symptom	Suspect Area	See page
Does not move in any forward position	1. Forward clutch (C_1)	★
Does not move in any reverse position	1. Direct clutch (C_2) 2. 1st and reverse brake (B_3) 3. U/D brake (B_4)	★ ★ ★
Does not move in any position	1. Torque converter clutch 2. Oil pump 3. U/D brake (B_4) 4. Front planetary gear 5. Rear planetary gear 6. On-vehicle matrix chart	AX-21 ★ ★ ★ ★ DI-276
No up-shift (1st → 2nd)	1. 2nd brake (B_2) 2. No. 1 one-way clutch (F_1) 3. On-vehicle matrix chart	★ ★ DI-276
No up-shift (2nd → 3rd)	1. Direct clutch (C_2) 2. On-vehicle matrix chart	★ DI-276
No up-shift (3rd → O/D)	1. U/D clutch (C_3) 2. On-vehicle matrix chart	★ DI-276
No down-shift (O/D → 3rd)	1. U/D brake (B_4) 2. U/D one-way clutch (F_3) 2. On-vehicle matrix chart	★ ★ DI-276
No down-shift (3rd → 2nd)	1. No. 1 one-way clutch (F_1) 2. On-vehicle matrix chart	★ DI-276
No down-shift (2nd → 1st)	1. No. 2 one-way clutch (F_2) 2. On-vehicle matrix chart	★ DI-276
Harsh engagement (N → R)	1. Direct clutch (C_2) 2. 1st and reverse brake (B_3) 3. On-vehicle matrix chart	★ ★ DI-276
Harsh engagement (N → D)	1. Forward clutch (C_1)	★
Harsh engagement (N → L)	1. Forward clutch (C_1) 2. 1st and reverse brake (B_3) 3. No. 2 one-way clutch (F_2) 4. U/D one-way clutch (F_3) 5. On-vehicle matrix chart	★ ★ ★ ★ DI-276
Harsh engagement (1st → 2nd: D position)	1. 2nd brake (B_2) 2. No. 1 one-way clutch (F_1) 3. On-vehicle matrix chart	★ ★ DI-276
Harsh engagement (1st → 2nd: 2 position)	1. 2nd coast brake (B_1) 2. 2nd brake (B_2) 3. No. 1 one-way clutch (F_1) 4. On-vehicle matrix chart	★ ★ ★ DI-276
Harsh engagement (1st → 2nd → 3rd → O/D)	1. On-vehicle matrix chart	DI-276
Harsh engagement (2nd → 3rd)	1. Direct clutch (C_2) 2. On-vehicle matrix chart	★ DI-276
Harsh engagement (3rd → O/D)	1. U/D clutch(C_3) 2. On-vehicle matrix chart	★ DI-276
Harsh engagement (O/D → 3rd)	1. U/D brake (B_4) 2. U/D one-way clutch (F_3) 3. On-vehicle matrix chart	★ ★ DI-276

Harsh engagement (3rd → 2nd)	1. No. 1 one-way clutch (F_1) 2. On-vehicle matrix chart	★ DI-276
Slip (Forward & Reverse)	1. Torque converter clutch 2. Oil pump 3. 1st and reverse brake (B_3) 4. On-vehicle matrix chart	AX-21 ★ ★ DI-276
Slip (R position)	1. Direct clutch (C_2) 2. 1st and reverse brake (B_3)	★ ★
Slip (1st)	1. Forward clutch (C_1) 2. No. 2 one-way clutch (F_2) 3. U/D one-way clutch (F_3)	★ ★ ★
Slip (2nd)	1. Forward clutch (C_1) 2. 2nd brake (B_2) 3. No. 1 one-way clutch (F_1) 4. U/D one-way clutch (F_3)	★ ★ ★ ★
Slip (3rd)	1. Forward clutch (C_1) 2. Direct clutch (C_2) 3. No. 1 one-way clutch (F_1) 4. U/D one-way clutch (F_3)	★ ★ ★ ★
Slip (O/D)	1. 2nd brake (B_2) 2. Forward clutch (C_1) 3. Direct clutch (C_2) 4. U/D clutch (C_3)	★ ★ ★ ★
No engine braking (1st: L position)	1. 1st and reverse brake (B_3) 2. On-vehicle matrix chart	★ DI-276
No engine braking (2nd: 2 position)	1. 2nd coast brake (B_1) 2. On-vehicle matrix chart	★ DI-276
No kick-down	1. On-vehicle matrix chart	DI-276
Poor acceleration	1. Torque converter clutch 2. Forward clutch (C_1) 3. On-vehicle matrix chart	AX-21 ★ DI-276
No lock-up	1. Torque converter clutch	AX-21

DI53L-01

PROBLEM SYMPTOMS TABLE

If a normal code is displayed during the DTC check but the problem still occurs, check the circuits for each problem symptom in the order given in the table below and proceed to the relevant page for troubleshooting.

NOTICE:

When removing the ECU, turn the IG switch OFF.

Symptoms	Inspection Circuit	See page
ABS does not operate.	Only when 1. - 4. are all normal and the problem is still occurring, replace the ABS ECU. 1. Check the DTC, reconfirming that the normal code is output. 2. IG power source circuit. 3. Speed sensor circuit. 4. Check the ABS actuator with a checker. If abnormal, check the hydraulic circuit for leakage (See page DI-343).	 DI-308 DI-330 DI-325 BR-49
ABS does not operate efficiently.	Only when 1. - 4. are all normal and the problem is still occurring, replace the ABS ECU. 1. Check the DTC, reconfirming that the normal code is output. 2. Speed sensor circuit. 3. Stop light switch circuit. 4. Check the ABS actuator with a checker. If abnormal, check the hydraulic circuit for leakage (See page DI-343).	 DI-308 DI-325 DI-334 BR-49
ABS warning light abnormal.	1. ABS warning light circuit. 2. ABS ECU.	DI-336
DTC check cannot be done.	Only when 1. and 2. are all normal and the problem is still occurring, replace the ABS ECU. 1. ABS warning light circuit. 2. Tc terminal circuit.	 DI-336 DI-339
Speed sensor signal check cannot be done.	1. Ts terminal circuit. 2. ABS ECU.	DI-341

FOR ALL OF VEHICLES

IN0GO-02

PRECAUTION

1. FOR VEHICLES EQUIPPED WITH SRS AIRBAG

(a) The CELICA is equipped with an SRS (Supplemental Restraint System), such as the driver airbag and front passenger airbag.
Failure to carry out service operations in the correct sequence could cause the supplemental restraint system to unexpectedly deploy during servicing, possibly leading to a serious accident.
Further, if a mistake is made in servicing the supplemental restraint system, it is possible the SRS may fail to operate when required. Before servicing (including removal or installation of parts, inspection or replacement), be sure to read the following items carefully, then follow the correct procedure described in this manual.

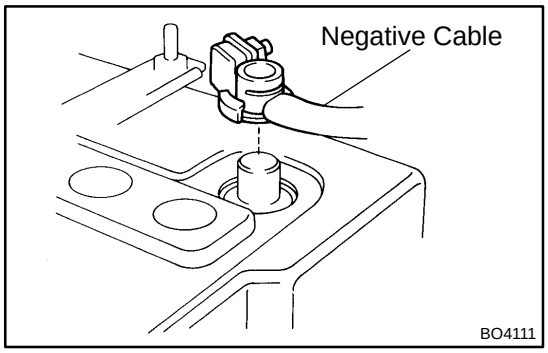

(b) GENERAL NOTICE

(1) Malfunction symptoms of the supplemental restraint system are difficult to confirm, so the diagnostic trouble codes become the most important source of information when troubleshooting. When troubleshooting the supplemental restraint system, always inspect the diagnostic trouble codes before disconnecting the battery (See page DI-346).

(2) Work must be started after 90 seconds from the time the ignition switch is turned to the ”LOCK” position and the negative (-) terminal cable is disconnected from the battery.
(The supplemental restraint system is equipped with a back-up power source so that if work is started within 90 seconds of disconnecting the negative (-) terminal cable from the battery, the SRS may deploy.)
When the negative (-) terminal cable is disconnected from the battery, memory of the clock and audio systems will be cancelled. So before starting work, make a record of the contents memorized by the each memory system. Then when work is finished, reset the clock and audio systems as before.
To avoid erasing the memory of each memory system, never use a back-up power supply from outside the vehicle.

(3) Even in cases of a minor collision where the SRS does not deploy, the steering wheel pad and passenger's airbag assembly should be inspected (See page RS-9 and RS-22).
(4) Never use SRS parts from another vehicle. When replacing parts, replace them with new parts.
(5) Before repairs, remove the airbag sensor if shocks are likely to be applied to the sensor during repairs.
(6) Never disassemble and repair the airbag sensor assembly, steering wheel pad, front passenger airbag, side airbag or seat belt pretensioner in order to reuse them.
(7) If the airbag sensor assembly, steering wheel pad or front passenger airbag have been dropped, or if there are cracks, dents or other defects in the case, bracket or connector, replace them with new ones.
(8) Do not expose the airbag sensor assembly and steering wheel pad directly to hot air or flames.
(9) Use a volt/ohmmeter with high impedance (10 kΩ/V minimum) for troubleshooting of the electrical circuit.
(10) Information labels are attached to the periphery of the SRS components. Follow the instructions on the notices.
(11) After work on the supplemental restraint system is completed, check the SRS warning light (See page DI-346).

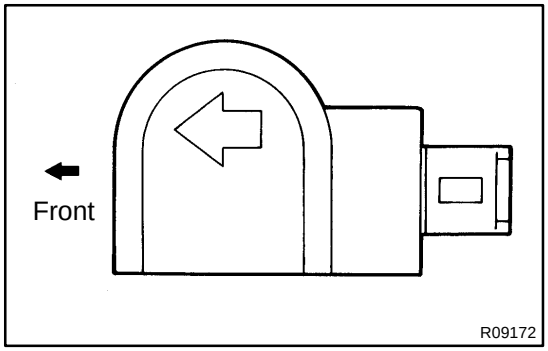

(c) FRONT AIRBAG SENSOR
(1) Never reuse the front airbag sensors involved in a collision that activated the supplemental restraint system. (Replace both left and right airbag sensors.)
(2) Install the front airbag sensor with the arrow on the sensor facing toward the front of the vehicle.
(3) The front airbag sensor set bolts have been anti-rust treated. When the sensor is removed, always replace the set bolts with new ones.
(4) The front airbag sensor is equipped with an electrical connection check mechanism. Be sure to lock this mechanism securely when connecting the connector. If the connector is not securely locked, a malfunction code will be detected by the diagnosis system (See page RS-2).

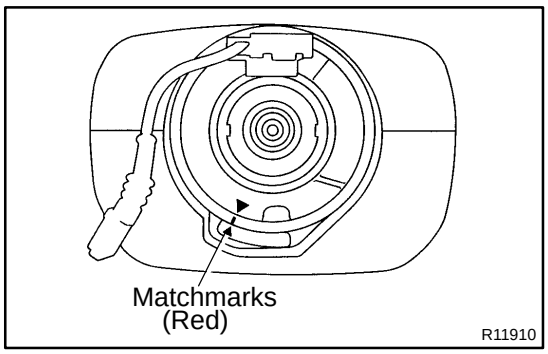

(d) SPIRAL CABLE (in Combination Switch)
The steering wheel must be fitted correctly to the steering column with the spiral cable at the neutral position, otherwise cable disconnection and other troubles may result. Refer to SR-17 or SR-31 of this manual concerning correct steering wheel installation.

(e) STEERING WHEEL PAD (with Airbag)

(1) When removing the steering wheel pad or handling a new steering wheel pad, it should be placed with the pad top surface facing up.
In this case, the twin-lock type connector lock lever should be in the locked state and care should be taken to place it so the connector will not be damaged. In addition do not store a steering wheel pad on top of another one.
Strong the pad with its metallic surface facing upward may lead to a serious accident if the airbag inflates for some reason.

(2) Never measure the resistance of the airbag squib. (This may cause the airbag to deploy, which is very dangerous.)

(3) Grease should not be attached to the steering wheel pad and the pad should not be cleaned with detergents of any kind.

(4) Store the steering wheel pad where the ambient temperature remains below 93˚C (200˚F), without high humidity and away from electrical noise.

(5) When using electric welding, first disconnect the airbag connector (yellow color and 2 pins) under the steering column near the combination switch connector before starting work.

(6) When disposing of a vehicle or the steering wheel pad alone, the airbag should be deployed using an SST before disposal (See page RS-1 1).
Carry out the operation in a safe place away from electrical noise.

Example:

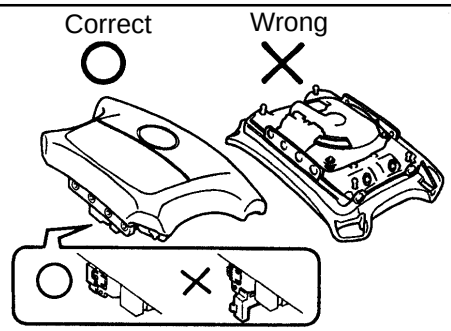

N01560

Z13953

Example:

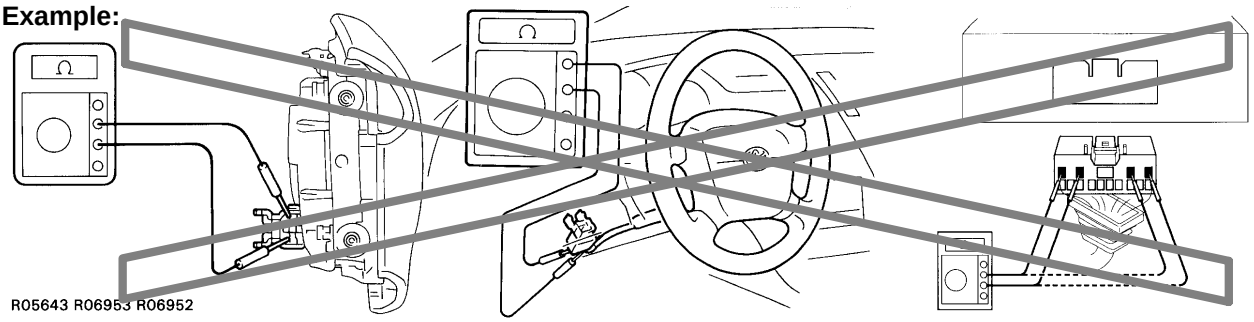

R05643 R06953 R06952

Z13950

(f) FRONT PASSENGER AIRBAG ASSEMBLY

(1) Always store a removed or new front passenger airbag assembly with the airbag deployment direction facing up.
Storing the airbag assembly with the airbag deployment direction facing down could cause a serious accident if the airbag inflates.

(2) Never measure the resistance of the airbag squib. (This may cause the airbag to deploy, which is very dangerous.)

(3) Grease should not be attached to the front passenger airbag assembly and the airbag door should not be cleaned with detergents of any kind.

(4) Store the airbag assembly where the ambient temperature remains below 93˚C (200˚F), without high humidity and away from electrical noise.

(5) When using electric welding, first disconnect the airbag connector (yellow color and 2 pins) installed on the glove compartment finish plate at the left side of the glove compartment before starting work.

(6) When disposing of a vehicle or the airbag assembly alone, the airbag should be deployed using an SST before disposal (See page RS-24).
Perform the operation in a safe place away from electrical noise.

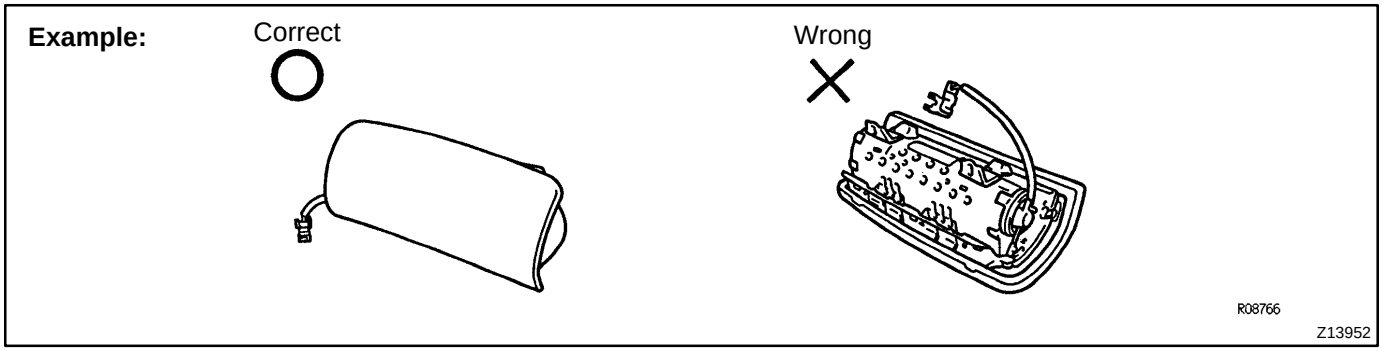

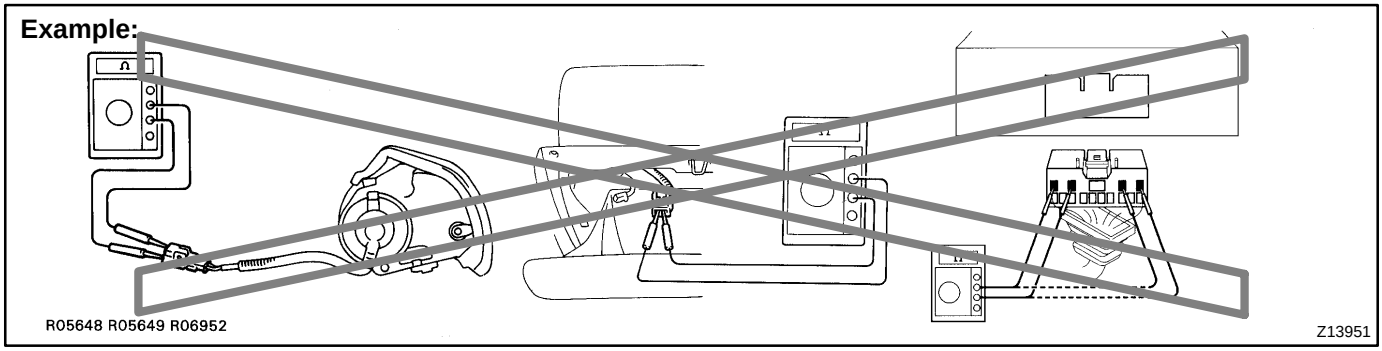

(g) CENTER AIRBAG SENSOR ASSEMBLY

(1) Never reuse the center airbag sensor assembly involved in a collision when the SRS has deployed.

(2) The connectors to the center airbag sensor assembly should be connected or disconnected with the sensor mounted on the floor. If the connectors are connected or disconnected while the center airbag sensor assembly is not mounted to the floor, it could cause undesired ignition of the supplemental restraint system.

(3) Work must be started after 90 seconds from the time the ignition switch is turned to the ”LOCK” position and the negative (-) terminal cable is disconnected from the battery, even if only loosening the set bolts of the center airbag sensor assembly.

(h) WIRE HARNESS AND CONNECTOR

The SRS wire harness is integrated with the cowl wire harness assembly and floor wire harness assembly. The wires for the SRS wire harness are encased in a yellow corrugated tube. All the connectors for the system are also a standard yellow color. If the SRS wire harness becomes disconnected or the connector becomes broken due to an accident, etc., repair or replace it as shown on page RS-42 .

2. FOR VEHICLES EQUIPPED WITH A CATALYTIC CONVERTER

CAUTION:

If large amount of unburned gasoline flows into the converter, it may overheat and create a fire hazard. To prevent this, observe the following precautions and explain them to your customer.

(a) Use only unleaded gasoline.

(b) Avoid prolonged idling.
Avoid running the engine at idle speed for more than 20 minutes.

(c) Avoid spark jump test.

(1) Perform spark jump test only when absolutely necessary. Perform this test as rapidly as possible.

(2) While testing, never race the engine.

(d) Avoid prolonged engine compression measurement.
Engine compression tests must be done as rapidly as possible.

(e) Do not run engine when fuel tank is nearly empty.
This may cause the engine to misfire and create an extra load on the converter.

(f) Avoid coasting with ignition turned off.

(g) Do not dispose of used catalyst along with parts contaminated with gasoline or oil.

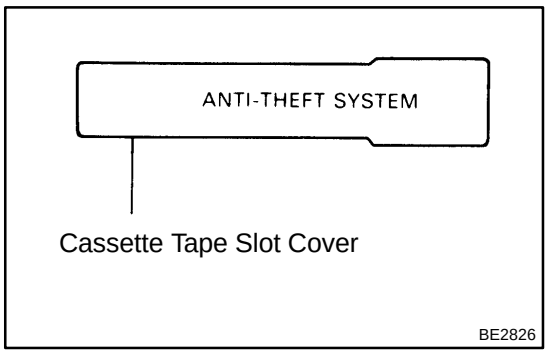

3. FOR VEHICLES WITH AN AUDIO SYSTEM WITH BUILT-IN ANTI-THEFT SYSTEM

Audio System displaying the sign "ANTI-THEFT SYSTEM" shown on the left has a built-in anti-theft system which makes the audio system soundless if stolen.

If the power source for the audio system is cut even once, the anti-theft system operates so that even if the power source is reconnected, the audio system will not produce any sound unless the ID number selected by the customer is input again. Accordingly, when performing repairs on vehicles equipped with this system, before disconnecting the battery terminals or removing the audio system the customer should be asked for the ID number so that the technician can input the ID number afterwards, or else a request made to the customer to input the ID number. For the method to input the ID number or cancel the anti-theft system, refer to the Owner's Manual.

4. IF VEHICLE IS EQUIPPED WITH MOBILE COMMUNICATION SYSTEM

For vehicles with mobile communication systems such as two-way radios and cellular telephones, observe the following precautions.

(1) Install the antenna as far as possible away from the ECU and sensors of the vehicle's electronic system.
(2) Install the antenna feeder at least 20 cm (7.87 in.) away from the ECU and sensors of the vehicle's electronic systems. For details about ECU and sensors locations, refer to the section on the applicable component.
(3) Avoid winding the antenna feeder together with the other wiring as much as possible, and also avoid running the antenna feeder parallel with other wire harnesses.
(4) Check that the antenna and feeder are correctly adjusted.
(5) Do not install powerful mobile communications system.

TROUBLESHOOTING

MX0BE-01

PROBLEM SYMPTOMS TABLE

Use the table below to help you find the cause of the problem. The numbers indicate the priority of the likely cause of the problem. Check each part in order. If necessary, replace parts.

Symptom	Suspect Area	See page
Noise	1. Oil (Level low)	MX-4
	2. Oil (Wrong)	MX-4
	3. Gear (Worn or damaged)	MX-9
	4. Bearing (Worn or damaged)	MX-9
Oil leakage	1. Oil (Level too high)	MX-4
	2. Gasket (Damaged)	MX-4
	3. Oil seal (Worn or damaged)	MX-4
	4. O-Ring (Worn or damaged)	MX-4
Hard to shift or will not shift	1. Control cable (Faulty)	MX-43
	2. Synchronizer ring (Worn or damaged)	MX-4 MX-21 MX-28
	3. Shifting key spring (Damaged)	MX-4 MX-21 MX-28
Jumps out of gear	1. Locking ball spring (Damaged)	MX-4
	2. Gear shift fork (Worn)	MX-4
	3. Gear (Worn or damaged)	MX-4
	4. Bearing (Worn or damaged)	MX-4

TROUBLESHOOTING

MX04B-06

PROBLEM SYMPTOMS TABLE

Use the table below to help you find the cause of the problem. The numbers indicate the priority of the likely cause of the problem. Check each part in order. If necessary, replace these parts.

Symptom	Suspect Area	See page
Noise	1. Oil (Level low)	MX-4
	2. Oil (Wrong)	MX-4
	3. Gear (Worn or damaged)	MX-9
	4. Bearing (Worn or damaged)	MX-9
Oil leakage	1. Oil (Level too high)	MX-4
	2. Gasket (Damaged)	MX-9
	3. Oil seal (Worn or damaged)	MX-9
	4. O-ring (Worn or damaged)	MX-9
Hard to shift or will not shift	1. Control cable (Faulty)	MX-42
	2. Synchronizer ring (Worn or damaged)	MX-9 MX-19 MX-27
	3. Shift key spring (Damaged)	MX-9 MX-19 MX-27
Jumps out of gear	1. Locking ball spring (Damaged)	MX-9
	2. Shift fork (Worn)	MX-9
	3. Gear (Worn or damaged)	MX-9
	4. Bearing (Worn or damaged)	MX-9

DI544-01

PROBLEM SYMPTOMS TABLE

Proceed with troubleshooting of each circuit in the table below.

Symptom	Suspect Area	See page
• With the ignition switch at ACC or ON, the SRS warning light sometimes lights up after approx. 6 seconds have elapsed. • SRS warning light is always lit up even when ignition switch is in the LOCK position.	• SRS warning light system malfunction (Always lit up when ignition switch is in LOCK position.)	DI-401
• With the ignition switch at ACC or ON, the SRS warning light does not light up.	• SRS warning light system malfunction (Does not light up, when ignition switch is turned to ACC or ON.)	DI-403
• DTC not displayed. • SRS warning light is always lit up with a DTC check procedure. • DTC displayed without Tc and E1 terminal connection.	• Tc terminal circuit	DI-406

TROUBLESHOOTING

CL065-01

PROBLEM SYMPTOMS TABLE

Use the table below to help you find the cause of the problem. The numbers indicate the priority of the likely cause of the problem. Check each part in order. If necessary, replace these parts.

Symptom	Suspect Area	See page
Clutch grabs/chatters	1. Engine mounting (Loosen)	-
	2. Clutch disc (Runout is excessive)	CL-14
	3. Clutch disc (Oily)	CL-14
	4. Clutch disc (Worn out)	CL-14
	5. Clutch disc torsion rubber (Damaged)	CL-14
	6. Clutch disc (Glazed)	CL-14
	7. Diaphragm spring (Out of tip alignment)	CL-16
Clutch pedal spongy	1. Clutch line (Air in line)	-
	2. Master cylinder cup (Damaged)	CL-4
	3. Release cylinder cup (Damaged)	CL-9
Clutch noisy	1. Release bearing (Worn, dirty, or damaged)	CL-16
	2. Clutch disc torsion rubber (Damaged)	CL-14
Clutch slips	1. Clutch pedal (Freeplay out of adjustment)	CL-2
	2. Clutch disc (Oily)	CL-14
	3. Clutch disc (Worn out)	CL-14
	4. Diaphragm spring (Damaged)	CL-14
	5. Pressure plate (Distortion)	CL-14
	6. Flywheel (Distortion)	-
Clutch does not disengage	1. Clutch pedal (Freeplay out of adjustment)	CL-2
	2. Clutch line (Air in line)	-
	3. Master cylinder cup (Damaged)	CL-4
	4. Release cylinder cup (Damaged)	CL-9
	5. Clutch disc (out of true)	CL-14
	6. Clutch disc (Runout is excessive)	CL-14
	7. Clutch disc (Lining broken)	CL-14
	8. Clutch disc (Dirty or burned)	CL-14
	9. Clutch disc (Oily)	CL-14
	10. Clutch disc (Lack of spline grease)	CL-16
	11. Diaphragm spring (Damaged)	CL-14
	12. Diaphragm spring (Out of tip alignment)	CL-16
	13. Pressure plate (Distortion)	CL-14

TROUBLESHOOTING

SR01T-05

PROBLEM SYMPTOMS TABLE

Use the table below to help you find the cause of the problem. The numbers indicate the priority of the likely cause of the problem. Check each part in the order shown. If necessary, repair or replace these parts.

Symptom	Suspect Area	See page
Hard steering	1. Tires (Improperly inflated)	SA-2
	2. Power steering fluid level (Low)	SR-5
	3. Drive belt (Loose)	SR-3
	4. Front wheel alignment (Incorrect)	SA-4
	5. Steering system joints (Worn)	-
	6. Suspension arm ball joints (Worn)	SA-48
	7. Steering column (Binding)	-
	8. Power steering gear	SR-56
Poor return	1. Tires (Improperly inflated)	SA-2
	2. Front wheel alignment (Incorrect)	SA-4
	3. Steering column (Binding)	-
	4. Power steering gear	SR-56
Excessive play	1. Steering system joints (Worn)	-
	2. Suspension arm ball joints (Worn)	SA-48
	3. Sliding yoke (Worn)	-
	4. Front wheel bearing (Worn)	SA-10
	5. Power steering gear	SR-56
Abnormal noise	1. Power steering fluid level (Low)	SR-5
	2. Steering system joints (Worn)	-
	3. Power steering gear	SR-56

PROPORTIONING VALVE (P VALVE)

BR0QV-05

ON-VEHICLE INSPECTION

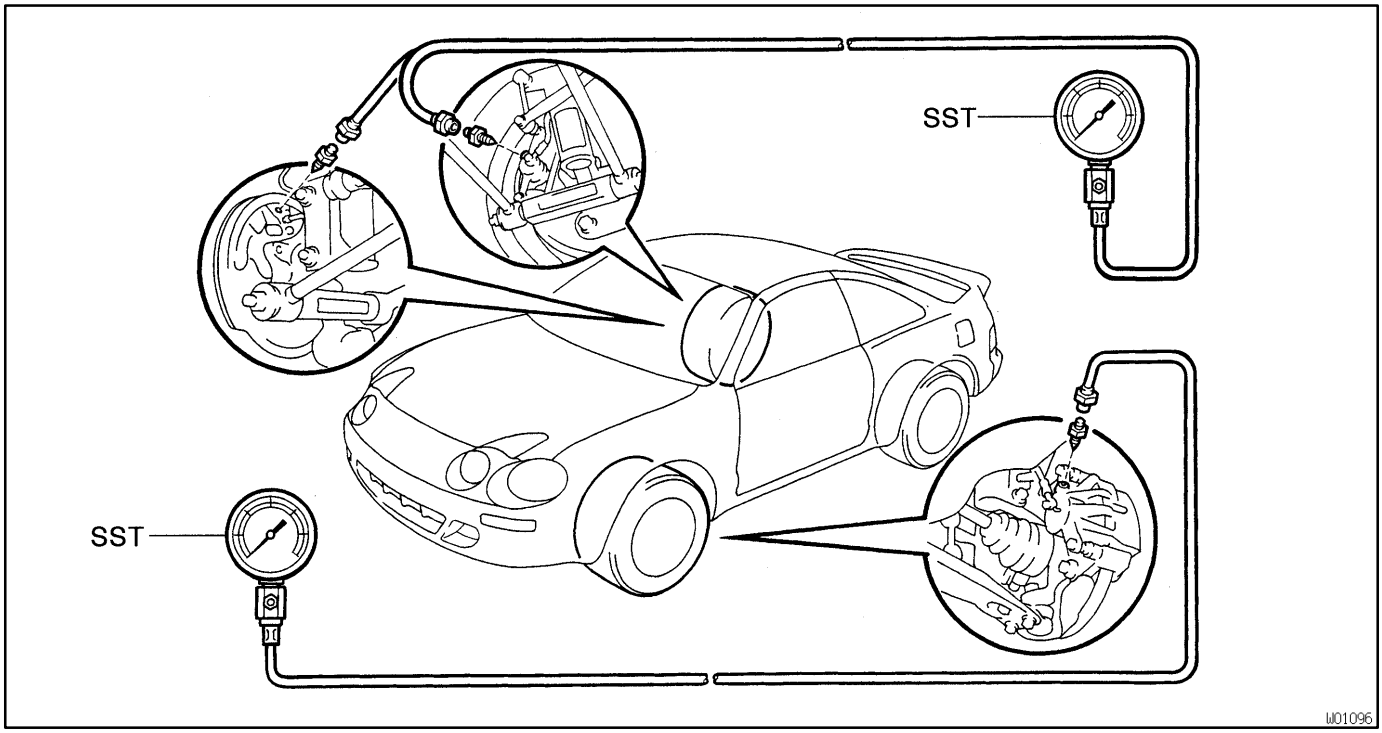

1. INSTALL LSPV GAUGE (SST) AND BLEED AIR

SST 09709-29017

2. BLEED AIR FROM FLUID PRESSURE GAUGE

3. RAISE MASTER CYLINDER PRESSURE AND CHECK REAR BRAKE CALIPER PRESSURE

7A-FE

Master cylinder fluid pressure	Rear brake caliper fluid pressure
2,452 kPa (25 kgf/cm^2, 356 psi)	2,452 kPa (25 kgf/cm^2, 356 psi)
7,845 kPa (80 kgf/cm^2, 1,138 psi)	3,800 kPa (38.75 kgf/cm^2, 551 psi)

5S-FE

Master cylinder fluid pressure	Rear brake caliper fluid pressure
2,452 kPa (25 kgf/cm^2, 356 psi)	2,452 kPa (25 kgf/cm^2, 356 psi)
7,845 kPa (80 kgf/cm^2, 1,138 psi)	4,447 kPa (45.35 kgf/cm^2, 645 psi)

When inspecting the fluid pressure, inspect the left font and right rear together, and the right front and left rear together.

If the rear caliper pressure is incorrect, replace the P valve assembly.

4. BLEED BRAKE SYSTEM (See page BR-4)

5. CHECK FOR LEAKS

EMISSION CONTROL SYSTEM

EC039-03

PURPOSE

The emission control systems are installed to reduce the amount of HC, CO and NOx exhausted from the engine ((3), (4) and (5)), to prevent the atmospheric release of blow-by gas-containing HC (1) and evaporated fuel containing HC being released from the fuel tank (2).
The function of each system is shown in the following table.

System	Abbreviation	Function
(1) Positive Crankcase Ventilation	PCV	Reduces HC
(2) Evaporative Emission Control	EVAP	Reduces evaporated HC
(3) Exhaust Gas Recirculation	EGR	Reduces NOx
(4) Three-Way Catalytic Converter	TWC	Reduces HC, CO and NOx
(5) Sequential Multiport Fuel Injection*	SFI	Injects a precisely timed, optimum amount of fuel for reduced exhaust emissions

Remark: * For inspection and repair of the SFI system, refer to the SF section in this manual.

EMISSION CONTROL SYSTEM

EC0FJ-02

PURPOSE

The emission control systems are installed to reduce the amount of CO, HC and NOx exhausted from the engine ((3), (4) and (5)), to prevent the atmospheric release of blow-by gas-containing HC (1) and evaporated fuel containing HC being released from the fuel tank (2).
The function of each system is shown in these table.

System	Abbreviation	Function
3. Positive Crankcase Ventilation	PCV	Reduces HC
4. Evaporative Emission Control	EVAP	Reduces evaporated HC
5. Exhaust Gas Recirculation	EGR	Reduces NOx
6. Three-Way Catalytic Converter	TWC	Reduces CO, HC and NOx
7. Multiport Fuel Injection *	SFI	Injects a precisely timed, optimum amount of fuel for reduced exhaust emissions

Remark: * For inspection and repair of the SFI system, refer to the SF section this manual.

REAR BRAKE CALIPER

BR0QL-08

COMPONENTS

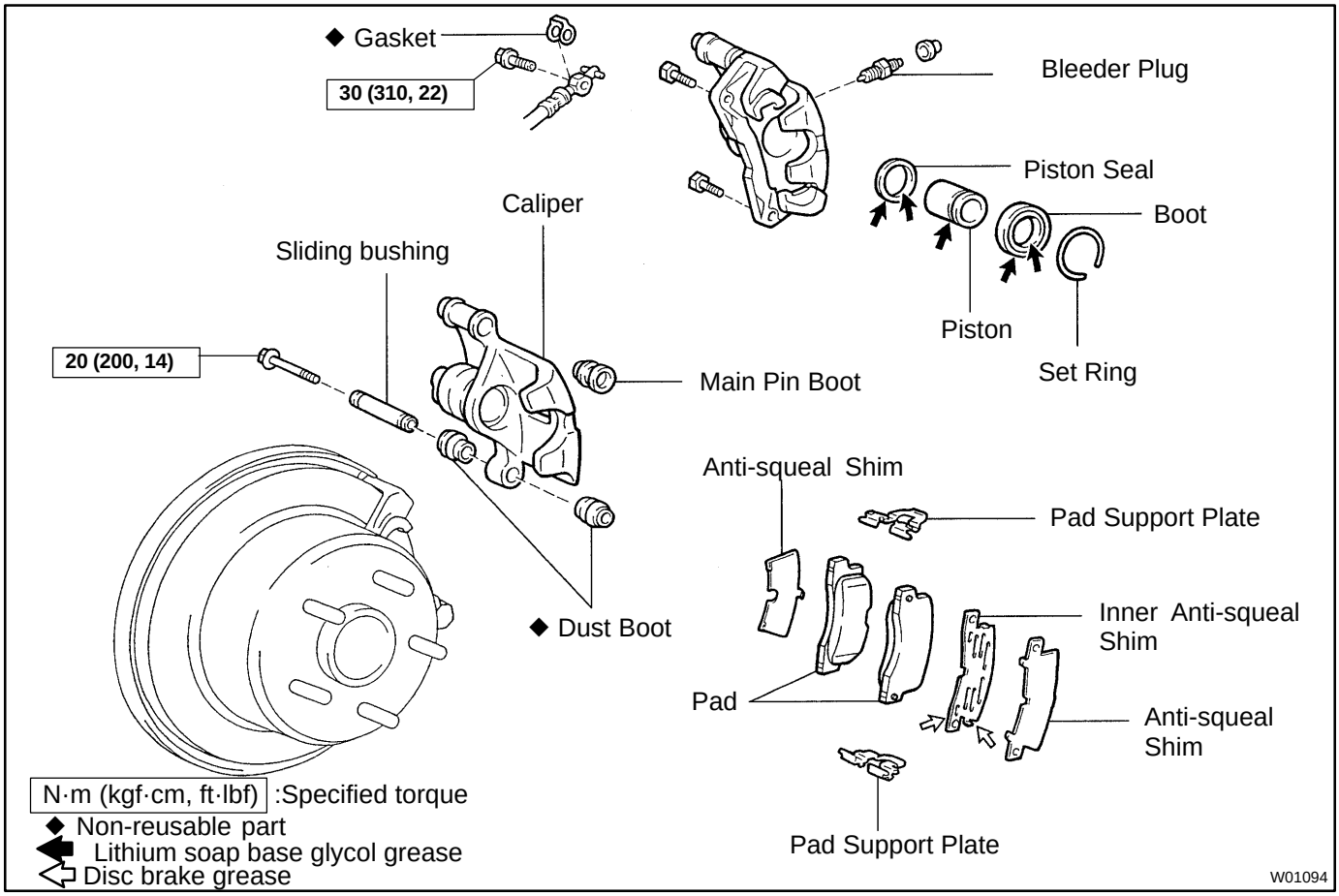

BR1NV-01

DISASSEMBLY

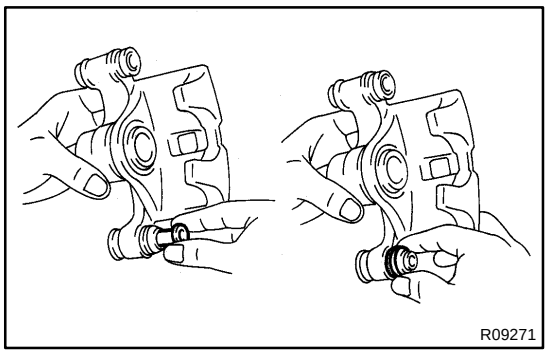

1. REMOVE SLIDING BUSHING AND DUST BOOTS

Pull out the sliding bushing and remove the 2 boots.

2. REMOVE MAIN PIN BOOT

Pull out the main pin boot.

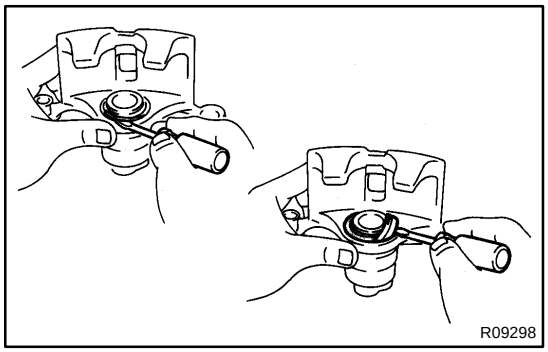

3. REMOVE CYLINDER BOOT SET RING AND CYLINDER BOOT

Using a screwdriver, remove the cylinder boot set ring and cylinder boot from the cylinder.

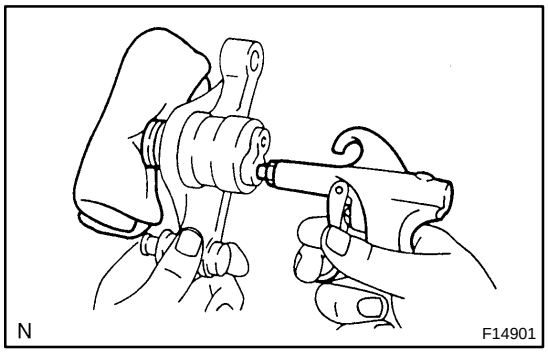

4. REMOVE PISTON

(a) Place a piece of cloth, or similar, article between the piston and the caliper.

(b) Use compressed air to remove the piston from the cylinder.

CAUTION:

Do not place your fingers in front of the piston when using compressed air.

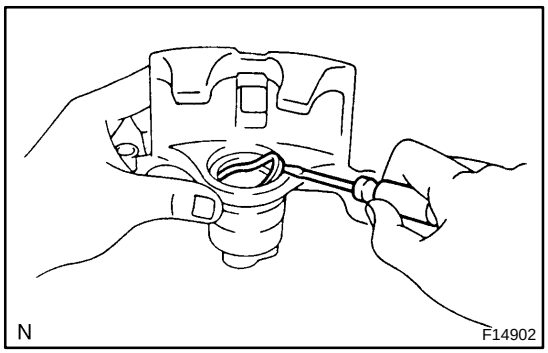

5. REMOVE PISTON SEAL

Using a screwdriver, remove the piston seal from the cylinder.

BR0QO-01

INSPECTION

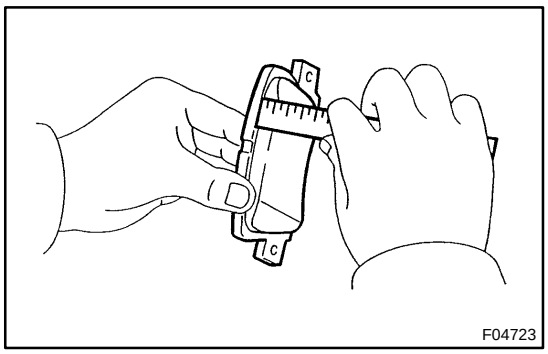

1. MEASURE PAD LINING THICKNESS

Using a ruler, measure the pad lining thickness.

Standard thickness: 10.0 mm (0.394 in.)

Minimum thickness: 1.0 mm (0.039 in.)

Replace the pad if the pad's thickness is at the minimum thickness or less, or if the pad has severe, uneven wear.

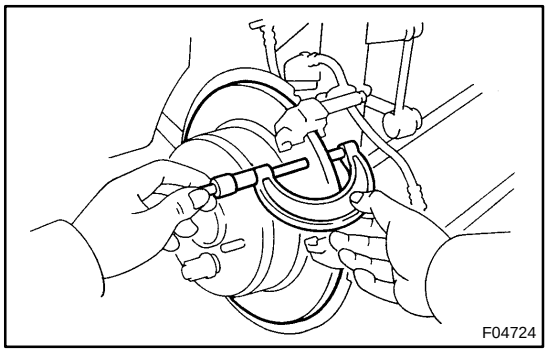

2. MEASURE DISC THICKNESS

Using a micrometer, measure the disc thickness.

Standard thickness: 9.0 mm (0.354 in.)

Minimum thickness: 8.0 mm (0.315 in.)

Replace the disc if the disc's thickness is at the minimum thickness or less. Replace the disc or grind it on a lathe if it is scored or worn unevenly.

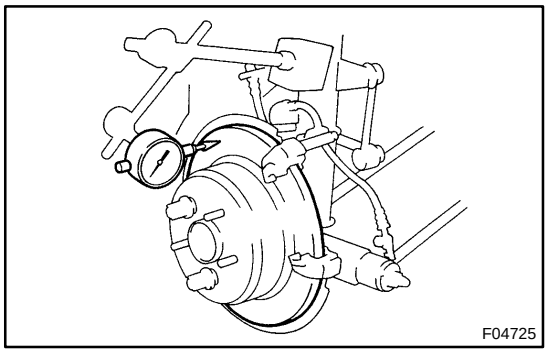

3. MEASURE DISC RUNOUT

Using a dial indicator, measure disc runout at a position 10 mm (0.39 in.) from the outside edge.

Maximum disc runout: 0.15 mm (0.0059 in.)

If the disc's runout is at the maximum value or greater, check the bearing play is in the axial direction and check the axle hub runout (See page SA-55). If the bearing play and axle hub runout are not abnormal, adjust the disc runout or grind it on a "On-car" brake lathe.

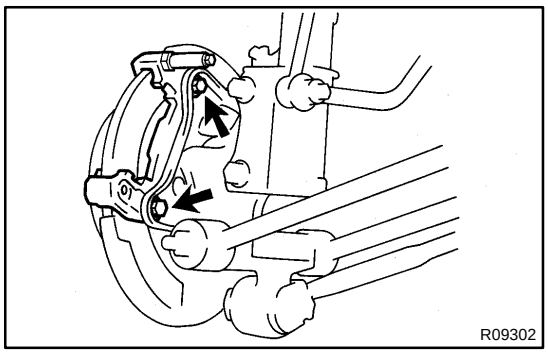

4. IF NECESSARY, ADJUST DISC RUNOUT

(a) Remove the 2 bolts and torque plate.

(b) Remove the hub nuts and the disc. Reinstall the disc in the position turned 1/5 from its original position on the hub. Install and torque the hub nuts.

Torque: 103 N·m (1,050 kgf·cm, 76 ft·lbf)

Remeasure the disc runout. Make a note of the runout and the disc's position on the hub.

(c) Repeat (b) until the disc has been installed on the 3 remaining hub positions.

(d) If the minimum runout recorded in (b) and (c) is less than 0.15 mm (0.0059 in.), install the disc in that position.

(e) If the minimum runout recorded in (b) and (c) is greater than 0.15 mm (0.0059 in.), replace the disc and repeat step 3.

(f) Install the torque plate and torque the mounting bolts.

Torque: 47 N·m (475 kgf·cm, 34 ft·lbf)

BR0QQ-01

INSTALLATION

Installation is in the reverse order of removal (See page BR-38).

1. **AFTER INSTALLATION, FILL BRAKE RESERVOIR WITH BRAKE FLUID AND BLEED BRAKE SYSTEM (See page BR-4)**
2. **CHECK FOR LEAKS**

BR0QP-01

REASSEMBLY

Reassembly is in the reverse order of disassembly (See page BR-39).

NOTICE:

Apply lithium soap base glycol grease to the parts indicated by the arrows (See page BR-37).

BR0QM-03

REMOVAL

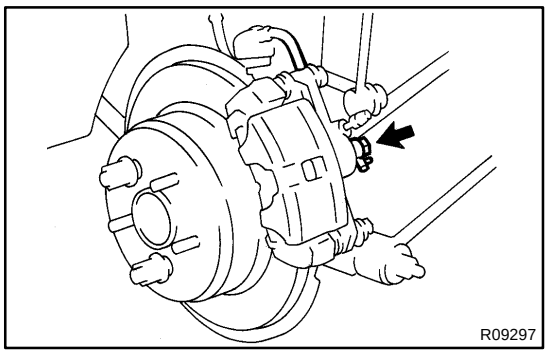

1. REMOVE REAR WHEEL

2. DISCONNECT FLEXIBLE HOSE

(a) Remove the union bolt and gasket from the caliper, then disconnect the flexible hose from the caliper.

Torque: 30 N·m (310 kgf·cm, 22 ft·lbf)

HINT:

At the time of installation, insert the flexible hose lock securely in the lock hole in the caliper.

(b) Use a container to catch the brake fluid as it drains out.

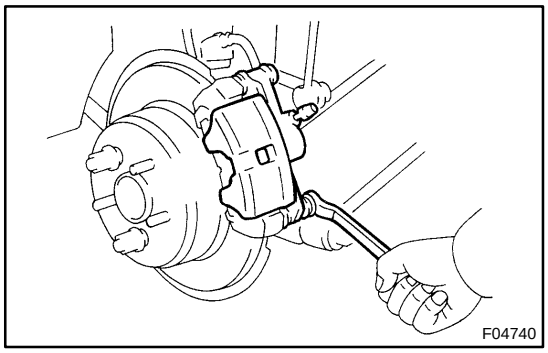

3. REMOVE CALIPER

(a) Remove the installation bolt.

Torque: 20 N·m (200 kgf·cm, 14 ft·lbf)

(b) Remove the caliper from the torque plate.

4. REMOVE 2 PADS WITH ANTI-SQUEAL SHIMS

5. REMOVE 2 PAD SUPPORT PLATES

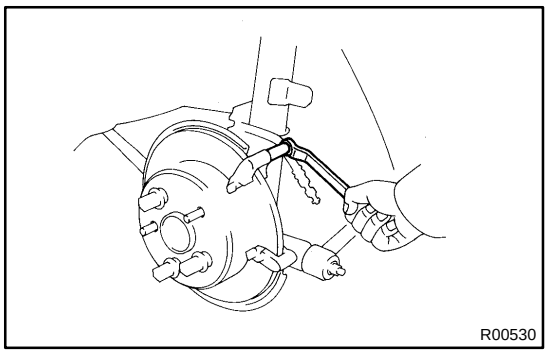

6. REMOVE MAIN PIN

Loosen the main pin installation bolt remove the main pin.

Torque: 27 N·m (270 kgf·cm, 19 ft·lbf)

REAR BRAKE PAD

COMPONENTS

BR0QJ-08

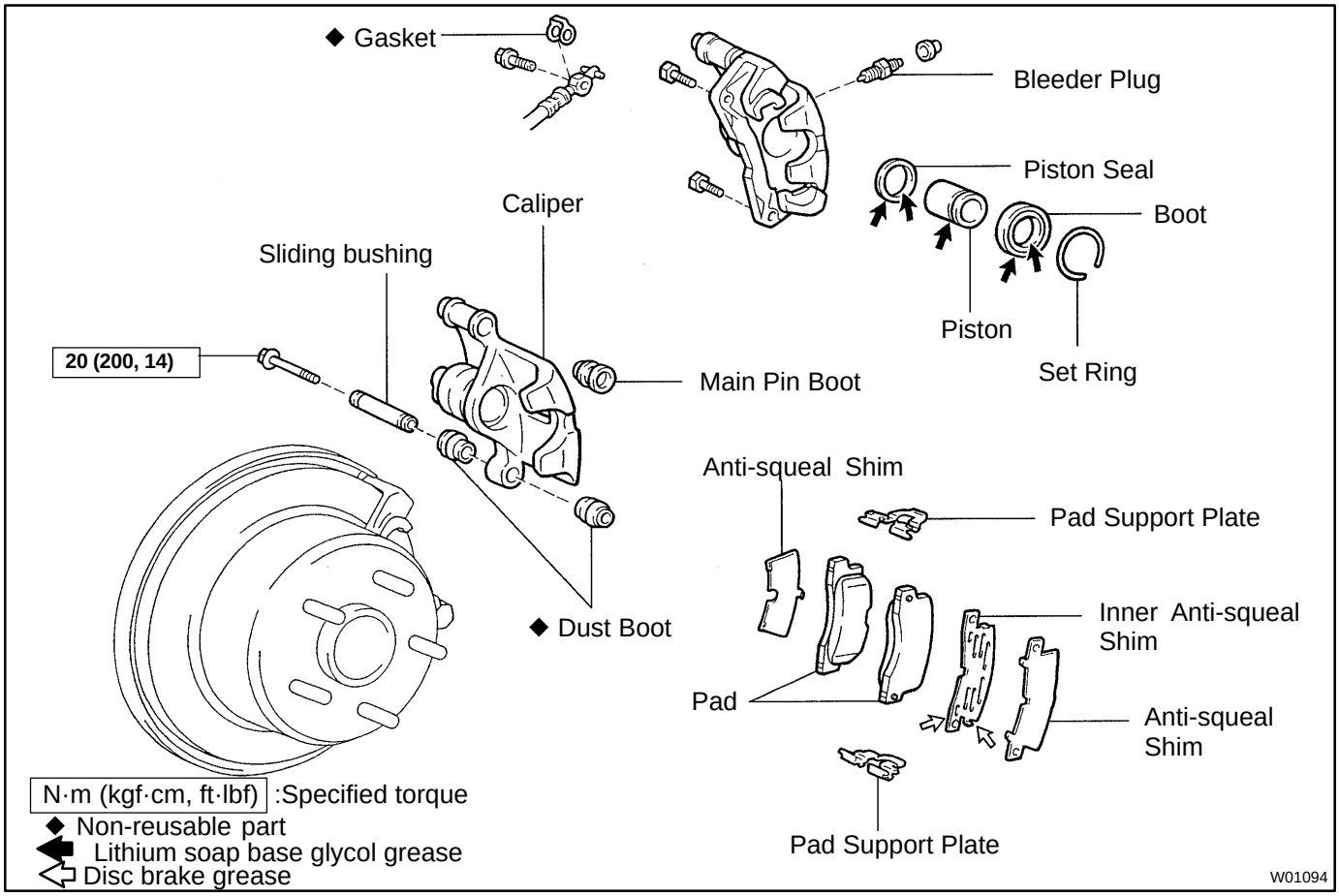

BR1NU-01

REPLACEMENT

1. REMOVE REAR WHEEL

Remove the wheel and temporarily fasten the disc with the hub nuts.

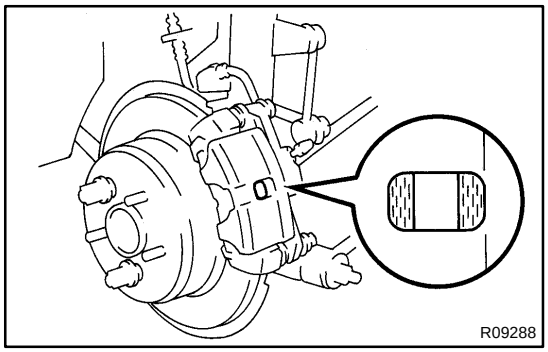

2. INSPECT PAD LINING THICKNESS

Check the pad thickness through the caliper inspection hole and replace pads if not within specification.

Minimum thickness: 1.0 mm (0.039 in.)

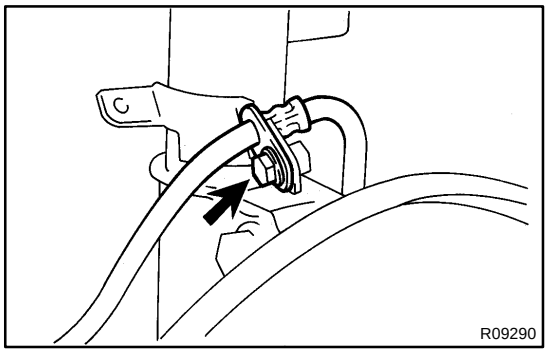

3. LIFT UP CALIPER

(a) Remove the flexible hose bracket.
(b) Remove the installation bolt from the torque plate.
(c) Lift up the caliper and suspend it securely.

HINT:

Do not disconnect the flexible hose.

4. REMOVE 2 PADS WITH 3 ANTI-SQUEAL SHIMS

5. REMOVE 2 PAD SUPPORT PLATES

NOTICE:

The support plates can be used again provided that they have sufficient rebound, no deformation, cracks or wear, and have had all rust, dirt and foreign particles cleaned off.

6. CHECK DISC THICKNESS AND RUNOUT

(See page BR-40)

7. INSTALL 2 PAD SUPPORT PLATES

8. INSTALL NEW PADS

NOTICE:

When replacing worn pads, the anti-squeal shims must be replaced together with the pads.

(a) Apply disc brake grease to in side of the inner anti-squeal shim (See page BR-34).
(b) Install the 2 anti-squeal shims on each pad.
(c) Install the anti-squeal shim to the inside pad.
(d) Install 2 new pads.

NOTICE:

There should be no oil or grease adhering to the friction surfaces of the pads or the disc.

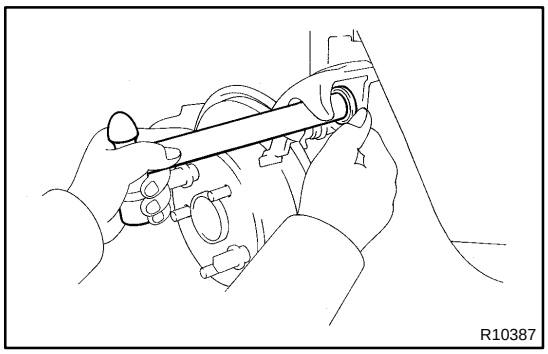

9. INSTALL CALIPER

(a) Draw out a small amount of brake fluid from the reservoir.

(b) Press in the piston with a hammer handle or similar implement.

HINT:

If the piston is difficult to push in, loosen the bleeder plug and push in the piston while letting some brake fluid escape.

(c) Install the caliper and torque the installation bolt.

Torque: 20 N·m (200 kgf·cm, 14 ft·lbf)

10. INSTALL REAR WHEEL

11. CHECK THAT FLUID LEVEL IS AT MAX LINE

REAR DRUM BRAKE

COMPONENTS

BR1C8-01

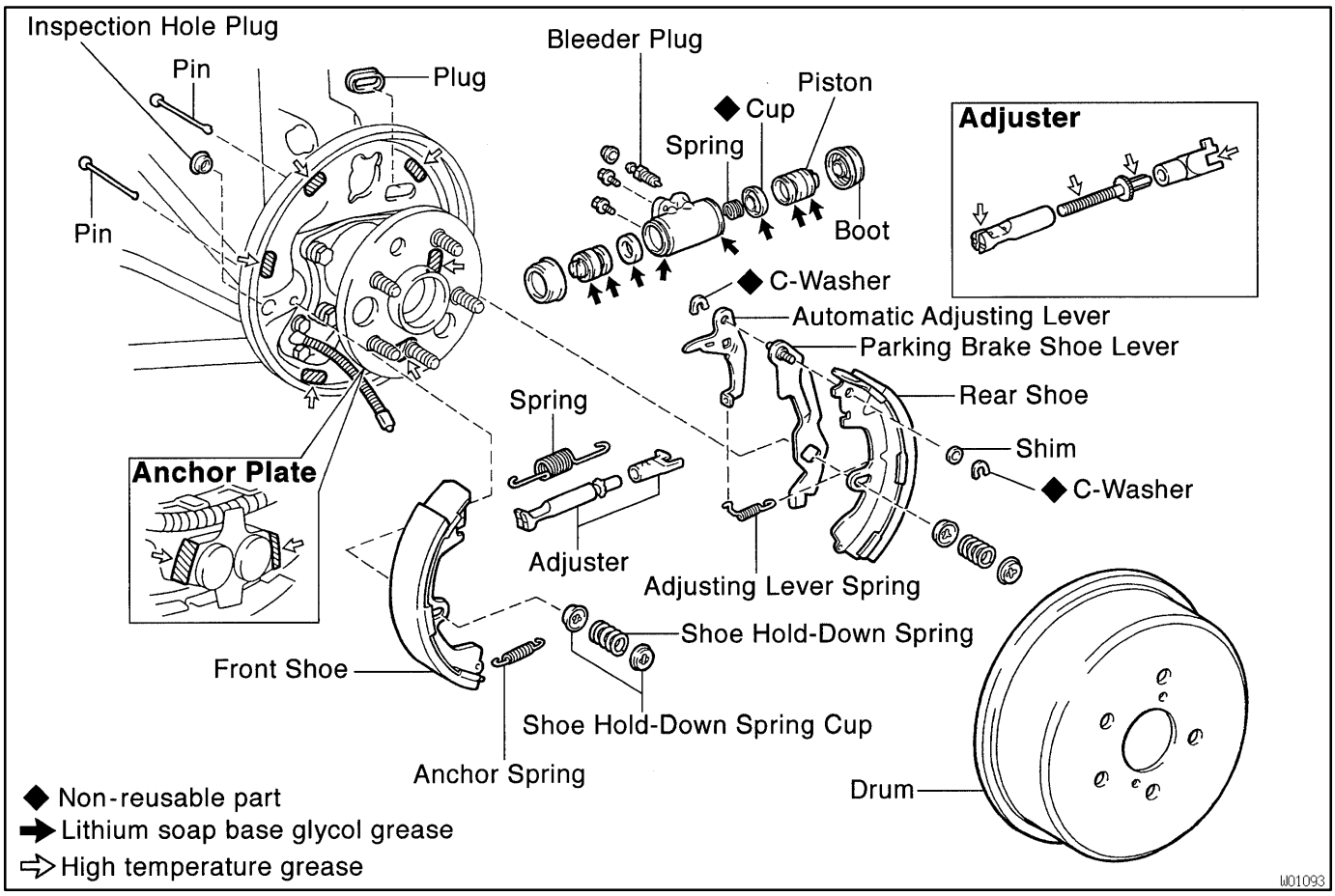

BR1CA-01

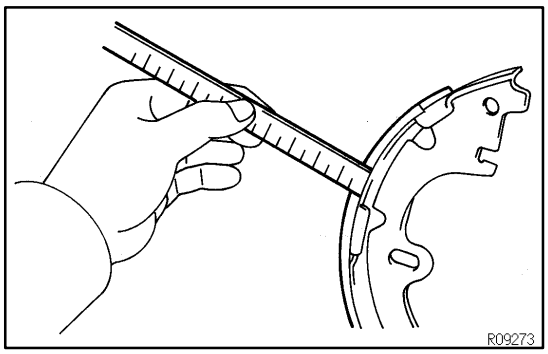

INSPECTION

1. INSPECT DISASSEMBLED PARTS

Inspect the disassembled parts for wear, rust or damage.

2. MEASURE BRAKE SHOE LINING THICKNESS

Using a ruler, measure the shoe lining thickness.

Standard thickness:
4.0 mm (0.157 in.)
Minimum thickness:
1.0 mm (0.039 in.)

If the shoe lining is less than the minimum, or shows signs of uneven wear, replace the brake shoes.

HINT:

If any of the brake shoes have to be replaced, replace all of the rear brake shoes in order to maintain even braking.

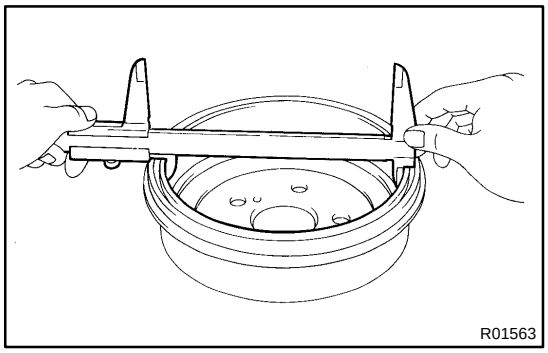

3. MEASURE BRAKE DRUM INSIDE DIAMETER

Using vernier calipers, measure the inside diameter of the drum.

Standard inside diameter:
200.0 mm (7.874 in.)
Maximum inside diameter:
201.0 mm (7.913 in.)

If the drum is scored or worn, the brake drum may be lathed to the maximum inside diameter.

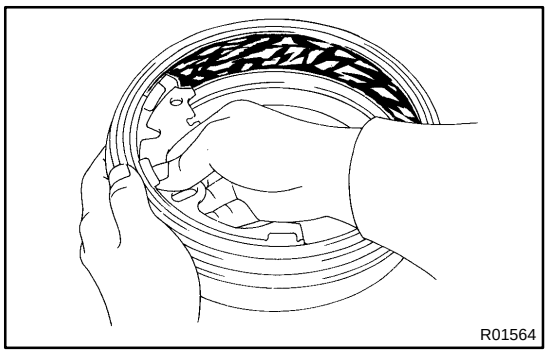

4. INSPECT REAR BRAKE LINING AND DRUM FOR PROPER CONTACT

If the contact between the brake lining and drum is improper, repair the lining with a brake shoe grinder, or replace the brake shoe assembly.

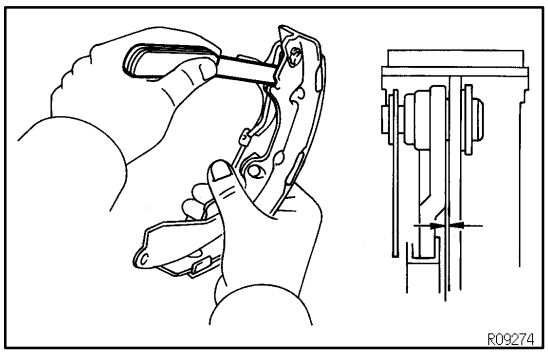

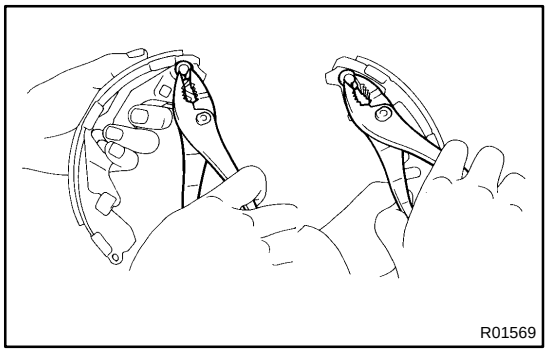

5. MEASURE CLEARANCE BETWEEN BRAKE SHOE AND LEVER

Using a feeler gauge, measure the clearance.

Standard clearance:

Less than 0.35 mm (0.0138 in.)

If the clearance is not within specification, replace the shim with one of the correct size.

Shim thickness mm (in.)	Shim thickness mm (in.)
0.2 (0.008)	0.5 (0.020)
0.3 (0.012)	0.6 (0.024)
0.4 (0.016)	0.9 (0.035)

6. IF NECESSARY, REPLACE SHIM

(a) Remove the parking brake shoe lever, and install the correct size shim.

(b) Install the parking brake shoe lever with a new C-washer.

(c) Install the automatic adjusting lever with a new C-washer.

BR1CB-02

INSTALLATION

Installation is in the reverse order of removal (See page BR-29).

1. AFTER INSTALLATION, FILL BRAKE RESERVOIR WITH BRAKE FLUID, BLEED BRAKE SYSTEM (See page BR-4) AND CHECK FOR LEAKS

NOTICE:

Apply lithium soap base glycol grease and high temperature grease to the parts indicated by the arrows (See page BR-28).

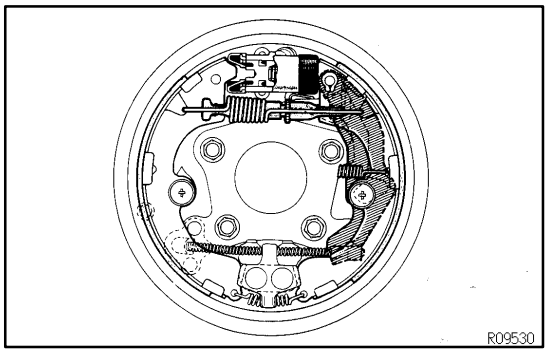

2. CHECK OPERATION OF AUTOMATIC ADJUSTING MECHANISM

(a) Move the parking brake lever of the rear shoe back and forth. Check that the adjuster turns.

If the adjuster does not turn, check for incorrect installation of the rear brakes.

(b) Adjust the adjuster length to the shortest possible amount.

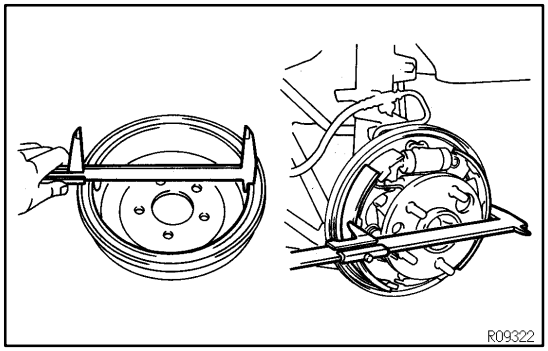

3. CHECK CLEARANCE BETWEEN BRAKE SHOES AND DRUM

(a) Remove the drum.

(b) Measure the brake drum inside diameter and diameter of the brake shoes. Check that the difference between the diameters is the correct shoe clearance.

Shoe clearance:
0.6 mm (0.024 in.)

If incorrect, check the parking brake system.

BR1C9-02

REMOVAL

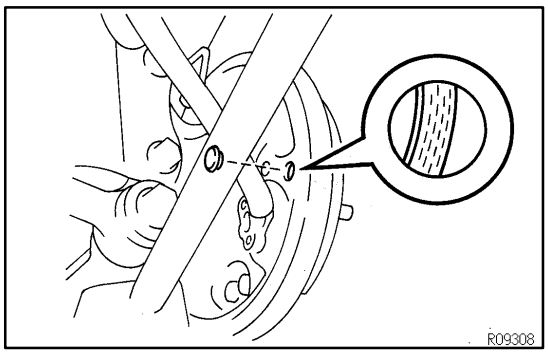

1. INSPECT SHOE LINING THICKNESS

Remove the inspection hole plug, and check the shoe lining thickness through the hole.

If less than the minimum, replace the shoes.

Minimum thickness:
1.0 mm (0.039 in.)

2. REMOVE REAR WHEEL

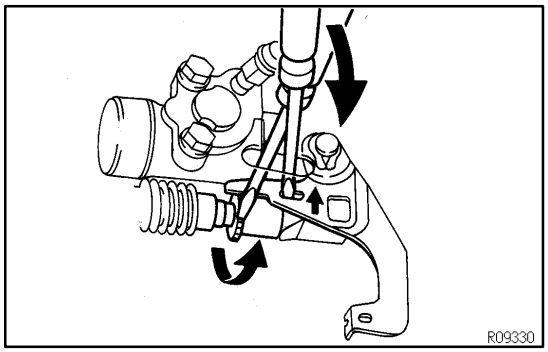

3. REMOVE BRAKE DRUM

HINT:

If the brake drum cannot be removed easily, do the following steps.

(a) Insert a screwdriver through the hole in the backing plate, and hold the automatic adjusting lever away from the adjuster.

(b) Using another screwdriver, reduce the brake shoe adjustment by turning the adjusting wheel.

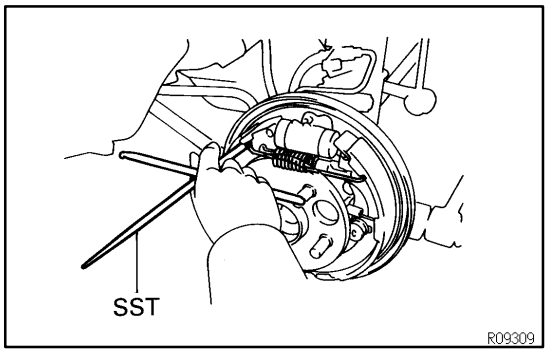

4. REMOVE FRONT SHOE

(a) Using SST, disconnect the return spring.
SST 09703-30010

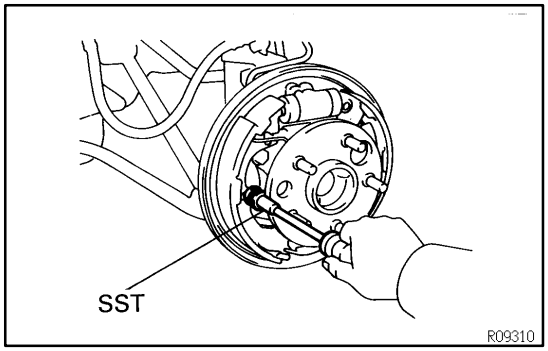

(b) Using SST, remove the shoe hold-down spring, cups and pin.
SST 09718-00010

(c) Disconnect the anchor spring from the front shoe and remove the front shoe.

(d) Remove the anchor spring from the rear shoe.

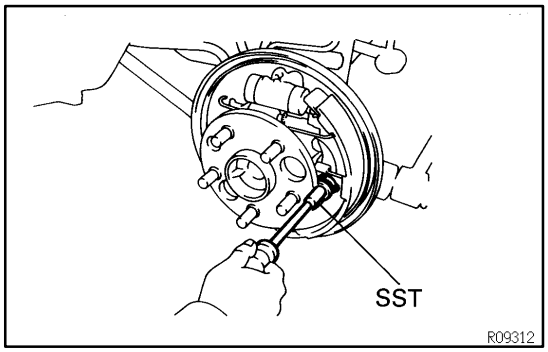

5. REMOVE REAR SHOE

(a) Using SST, remove the shoe hold-down spring, cups and pin.
SST 09718-00010

(b) Using a screwdriver, disconnect the parking brake cable from the anchor plate.

(c) Using pliers, remove the adjusting lever spring.

(d) Remove the adjuster.

(e) Using pliers, disconnect the parking brake cable from the lever and remove the rear shoe.

NOTICE:
Do not allow oil or grease to get on the rubbing face.

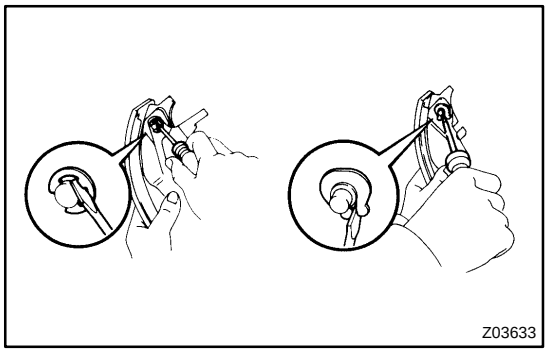

6. REMOVE AUTOMATIC ADJUSTING LEVER AND PARKING BRAKE LEVER

(a) Using a screwdriver, remove the C-washer.
(b) Remove the automatic adjusting lever.
(c) Using a screwdriver, remove the C-washer.
(d) Remove the parking brake lever.

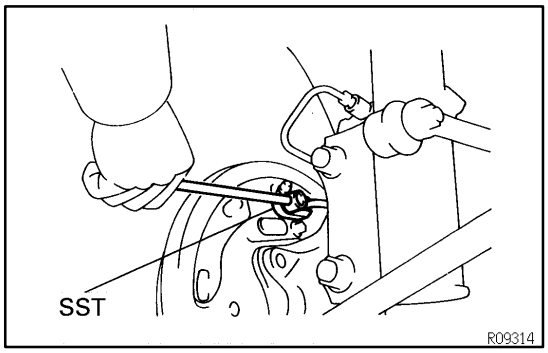

7. REMOVE WHEEL CYLINDER

(a) Using SST, disconnect the brake line. Use a container to catch the brake fluid.
Torque: 15 N·m (155 kgf·cm, 11 ft·lbf)
SST 09023-00100
(b) Remove the 2 bolts and the wheel cylinder.
Torque: 10 N·m (100 kgf·cm, 7 ft·lbf)

8. DISASSEMBLE WHEEL CYLINDER

Remove the these parts from the wheel cylinder.

- 2 boots
- 2 pistons
- 2 piston cups
- Spring

REAR SPEED SENSOR

COMPONENTS

BR0R3-06

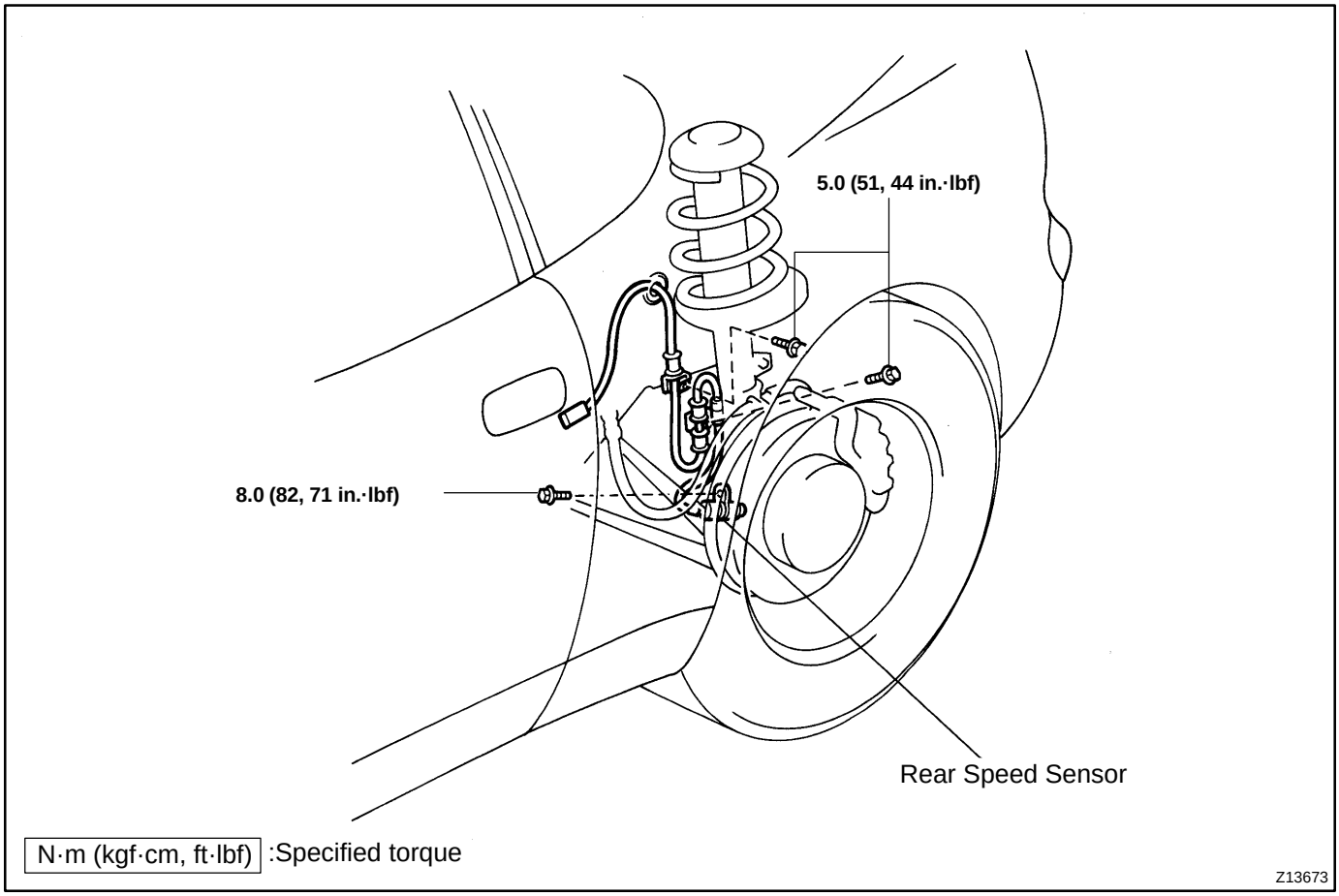

BR0R5-01

INSTALLATION

Installation is in the reverse order of removal (See page BR-59).

AFTER INSTALLATION, CHECK SPEED SENSOR SIGNAL (See page DI-308)

BR0R4-01

REMOVAL

1. DISCONNECT SPEED SENSOR CONNECTOR

(a) Liftback:
Remove the rear seat back and deck trim side panel.

(b) Coupe:
Remove the luggage compartment trim cover.

(c) Disconnect the speed sensor connector, and pull out the sensor wire harness with the grommet.

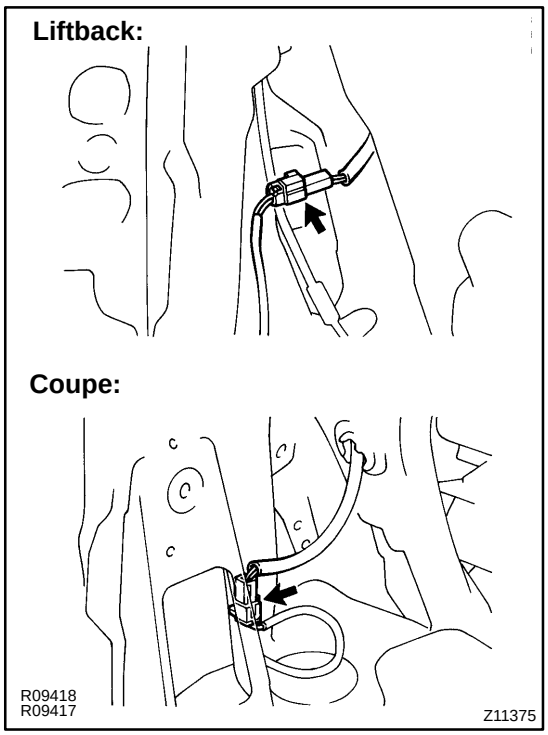

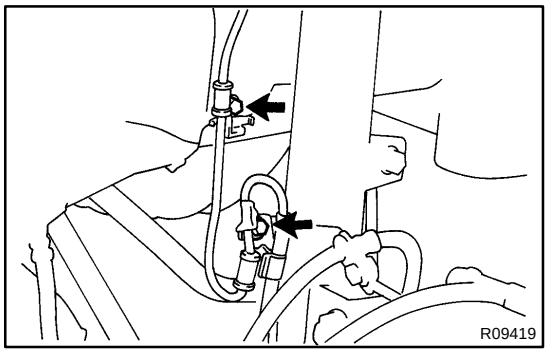

(d) Remove the 2 clamp bolts holding the sensor wire harness from the body and shock absorber.
Torque: 5.0 N·m (51 kgf·cm, 44 in.·lbf)

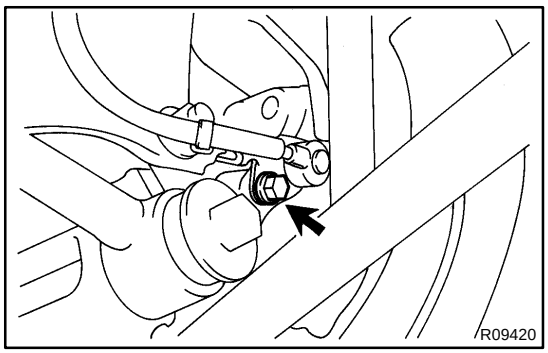

2. REMOVE SPEED SENSOR

Remove the speed sensor from the axle carrier.
Torque: 8.0 N·m (82 kgf·cm, 71 in.·lbf)

NOTICE:

At the time of installation, please refer to the following items.

- **There are no foreign objects on the sensor or the part of the knuckle to which the sensor is to be installed.**
- **The sensor is installed flat against the knuckle when you tighten the bolt.**

SR0JT-02

REASSEMBLY

NOTICE:

When using a vise, do not overtighten it.

1. INSTALL MAIN SHAFT ASSEMBLY

(a) Using a snap ring expander, install a new snap ring to the shaft assembly.

(b) Install the shaft assembly into the column tube.

(c) Using a snap ring expander, install a new snap ring to the shaft assembly.

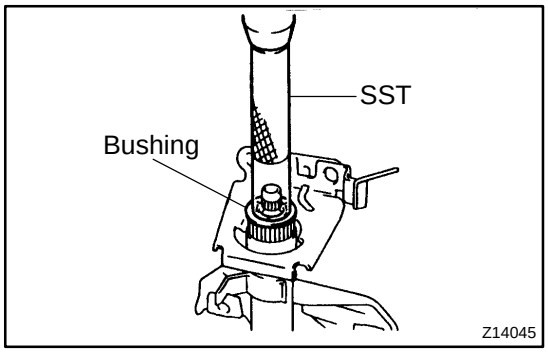

2. INSTALL BUSHING

(a) Coat the inside of a new bushing with molybdenum disulfide lithium base grease.

(b) Using SST, press in the bushing.
SST 09612-2201 1

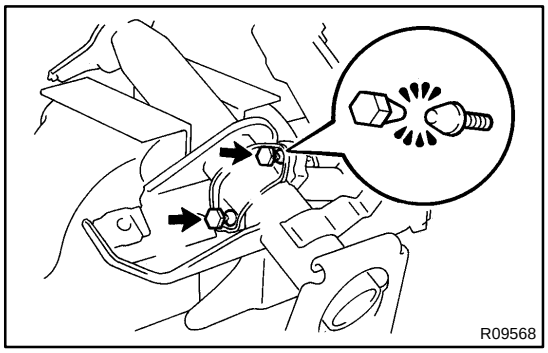

3. INSTALL COLUMN UPPER BRACKET AND COLUMN UPPER CLAMP

Tighten 2 new tapered-head bolts until the bolt head breaks off.

4. INSTALL KEY CYLINDER ILLUMINATION

Tighten the screw.

5. INSTALL INTERMEDIATE SHAFT

(a) Align the matchmarks on the intermediate shaft and main shaft.

(b) Torque the bolt.
Torque: 35 N·m (360 kgf·cm, 26 ft·lbf)

SR0JZ-03

REASSEMBLY

NOTICE:

When using a vise, do not overtighten it.

1. COAT WITH POWER STEERING FLUID

(See page SR-44)

2. INSTALL SHORTER STRAIGHT PIN

Install a new pin to the side front plate.

3. INSTALL SIDE FRONT PLATE

(a) Coat 2 new O-rings with power steering fluid and install them to the plate.

(b) Install the plate to the vane pump shaft.

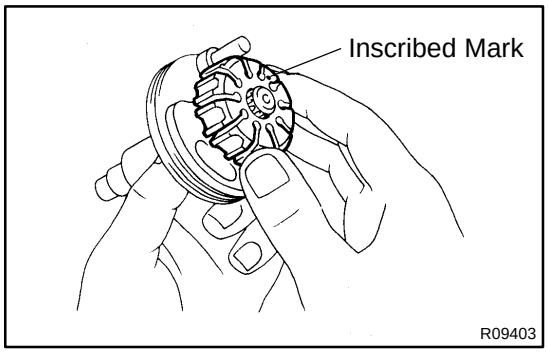

4. INSTALL VANE PUMP ROTOR

(a) Install the rotor to the vane pump shaft with the inscribed mark facing outward.

(b) Install a new snap ring to the vane pump shaft.

5. INSTALL LONGER STRAIGHT PIN

Install a new pin to the front housing.

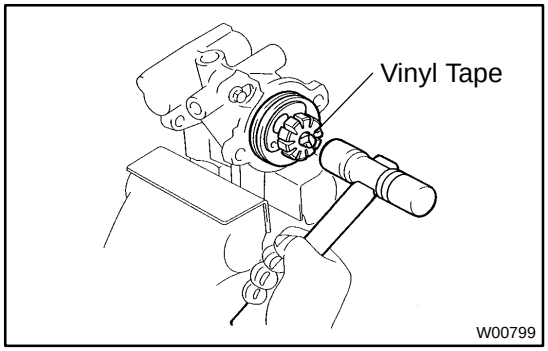

6. INSTALL VANE PUMP SHAFT WITH VANE PUMP ROTOR AND SIDE FRONT PLATE

(a) To prevent oil seal lip damage, wind vinyl tape on the shaft.

(b) Align the hole of the plate and longer straight pin, and tap in the shaft with a plastic hammer.

NOTICE:

Be careful not to damage the oil seal and O-rings.

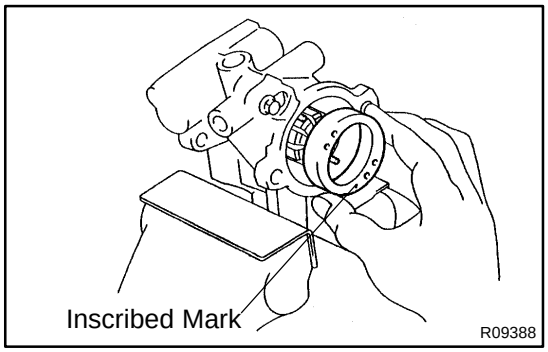

7. INSTALL CAM RING

Align the holes of the ring and 2 straight pins, and install the ring with the inscribed mark facing outward.

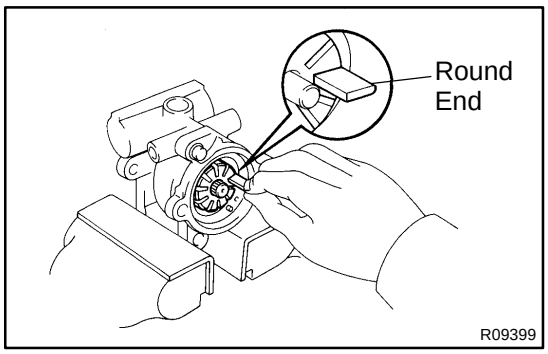

8. INSTALL VANE PLATES

Install the 10 plates with the round end facing outward.

9. INSTALL SIDE REAR PLATE

(a) Coat a new O-ring with power steering fluid and install it to the plate.

(b) Align the holes of the plate and 2 straight pins.

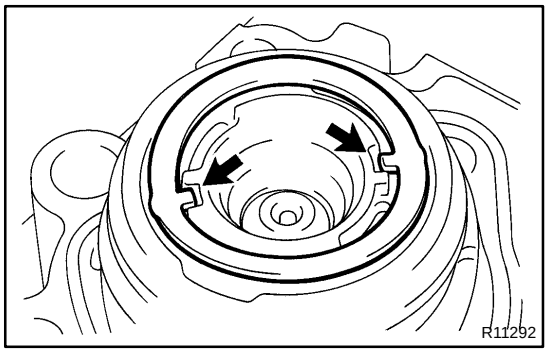

10. INSTALL WAVE WASHER

Install the washer so that its protrusions fit into the slots in the side rear plate.

11. INSTALL REAR HOUSING

(a) Coat a new O-ring with power steering fluid and install it to the housing.

(b) Install a new snap ring to the front housing.

12. INSTALL SPRING AND FLOW CONTROL VALVE

Install the valve facing the correct direction.

(See page SR-44)

13. INSTALL PRESSURE PORT UNION

(a) Coat a new O-ring with power steering fluid and install it to the union.

(b) Torque the union.

Torque: 69 N·m (700 kgf·cm, 51 ft·lbf)

14. INSTALL SUCTION PORT UNION

(a) Coat a new O-ring with power steering fluid and install it to the union.

(b) Torque the union.

Torque: 13 N·m (130 kgf·cm, 9 ft·lbf)

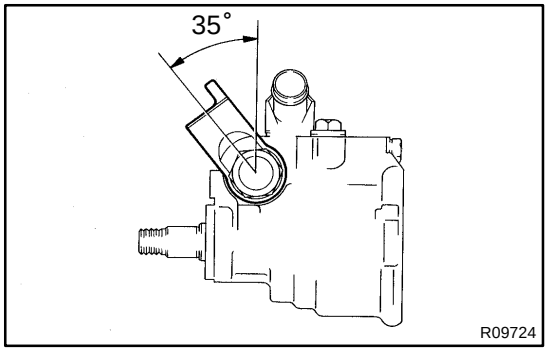

15. INSTALL PRESSURE FEED NO.2 TUBE

Torque the union bolt with a new gasket on each side of the tube.

Torque: 69 N·m (700 kgf·cm, 51 ft·lbf)

HINT:

Pressure feed No.2 tube installation angle is 35°.

16. INSTALL AIR CONTROL VALVE

(a) Install a new union seat.

(b) Torque the valve.

Torque: 36 N·m (370 kgf·cm, 27 ft·lbf)

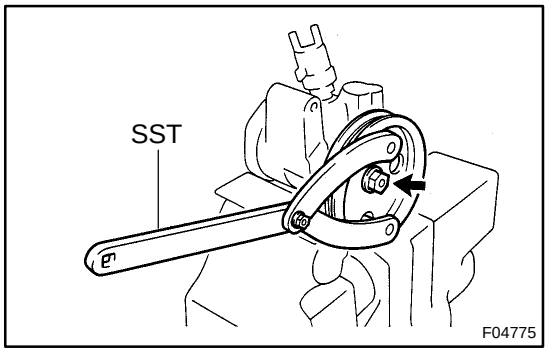

17. INSTALL VANE PUMP PULLEY

(a) Install the woodruff key to the vane pump shaft.

(b) Using SST to stop the pulley rotating, torque the nut.

SST 09960-10010 (09962-01000, 09963-01000)

Torque: 43 N·m (440 kgf·cm, 32 ft·lbf)

18. MEASURE PS VANE PUMP ROTATING TORQUE

(See page SR-47)

EM0JL-03

REASSEMBLY

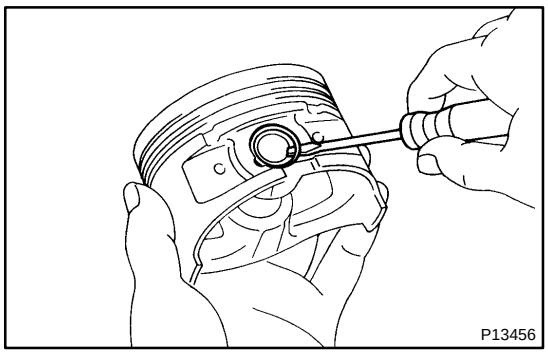

HINT:

- Thoroughly clean all parts to be assembled.
- Before installing the parts, apply new engine oil to all sliding and rotating surfaces.
- Replace all gaskets, O-rings and oil seals with new parts.

1. ASSEMBLE PISTON AND CONNECTING ROD

(a) Using a small screwdriver, install a new snap ring on one side of the piston pin hole.

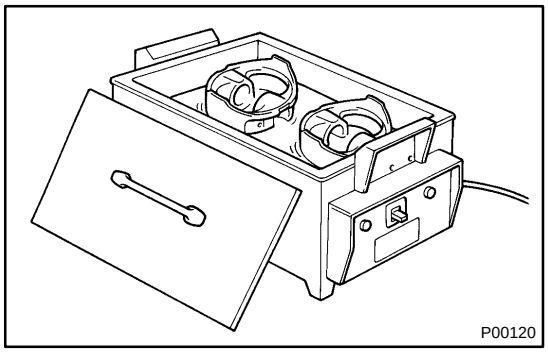

(b) Gradually heat the piston to 80 - 90˚C (176 - 194˚F).

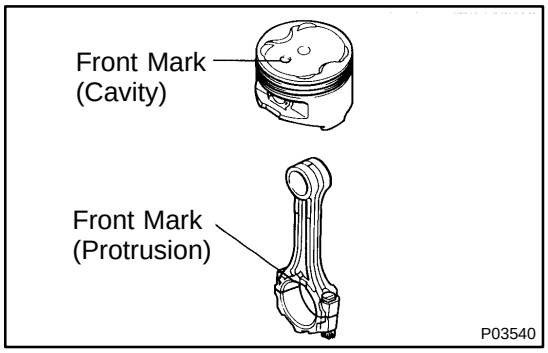

(c) Coat the piston pin with engine oil.

(d) Align the front marks of the piston and connecting rod, and push in the piston pin with your thumb.

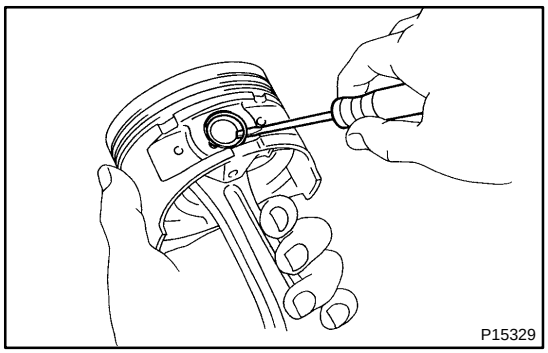

(e) Using a small screwdriver, install a new snap ring on the other side of the piston pin hole.

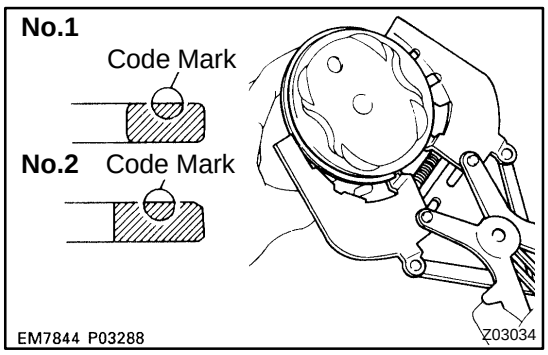

2. INSTALL PISTON RINGS

(a) Install the oil ring expander and 2 side rails by hand.

(b) Using a piston ring expander, install the No.2 and No.1 piston rings with the code mark facing upward.

Code mark:

No.1	1N or T
No.2	2N or 2T

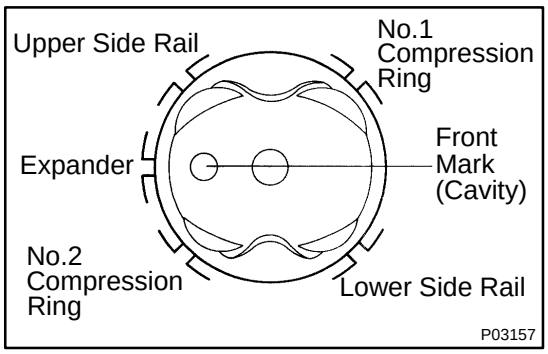

(c) Position the piston rings so that the ring ends are as shown.

NOTICE:

Do not align the ring ends.

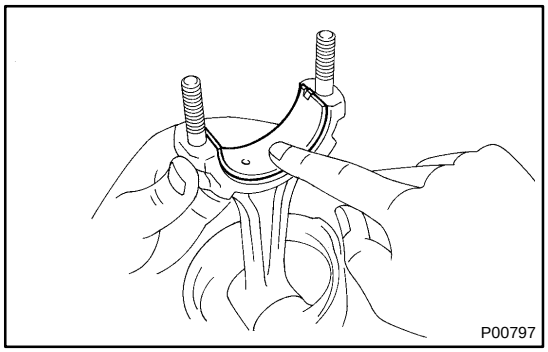

3. INSTALL BEARINGS

(a) Align the bearing claw with the groove of the connecting rod or connecting cap.

(b) Install the bearings in the connecting rod and connecting rod cap.

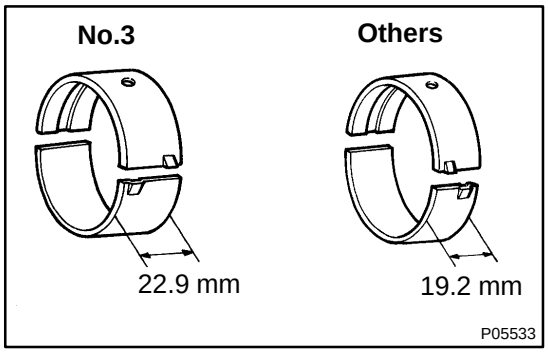

4. INSTALL MAIN BEARINGS

HINT:

- Main bearings come in widths of 19.2 mm (0.756 in.) and 22.9 mm (0.902 in.). Install the 22.9 mm (0.902 in.) bearings in the No.3 cylinder block journal position with the main bearing cap. Install the 19.2 mm (0.756 in.) bearings in the other positions.
- Upper bearings have an oil groove and oil holes; lower bearings do not.

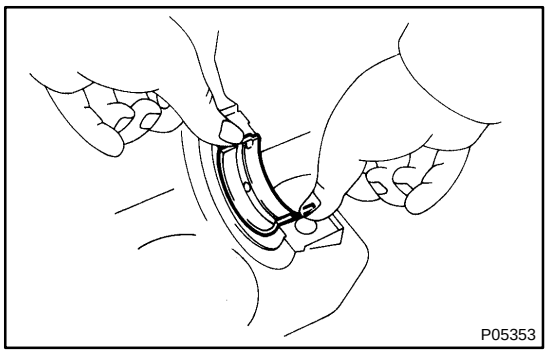

(a) Align the bearing claw with the claw groove of the cylinder block, and push in the 5 upper bearings.

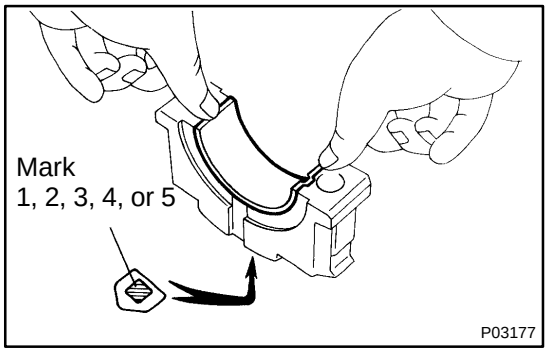

(b) Align the bearing claw with the claw groove of the main bearing cap, and push in the 5 lower bearings.

HINT:

A number is marked on each main bearing cap to indicate the installation position.

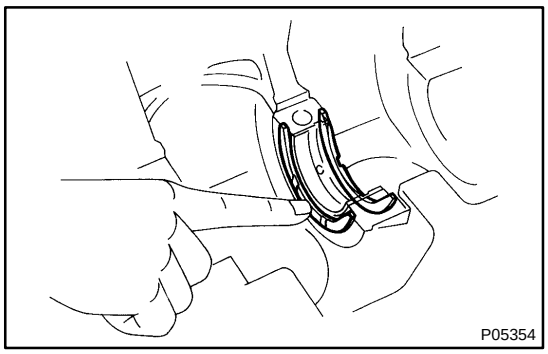

5. INSTALL UPPER THRUST WASHERS

Install the 2 thrust washers under the No.3 journal position of the cylinder block with the oil grooves facing outward.

6. PLACE CRANKSHAFT ON CYLINDER BLOCK

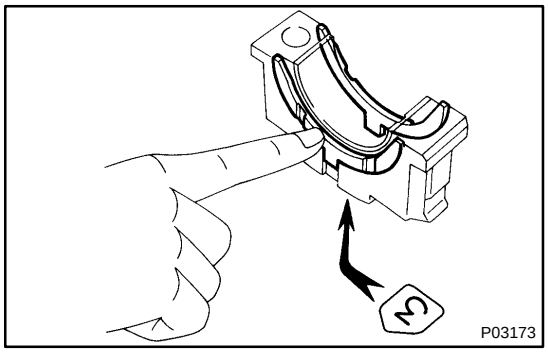

7. INSTALL MAIN BEARING CAPS AND LOWER THRUST WASHERS

(a) Install the 2 thrust washers on the No.3 bearing cap with the grooves facing outward.

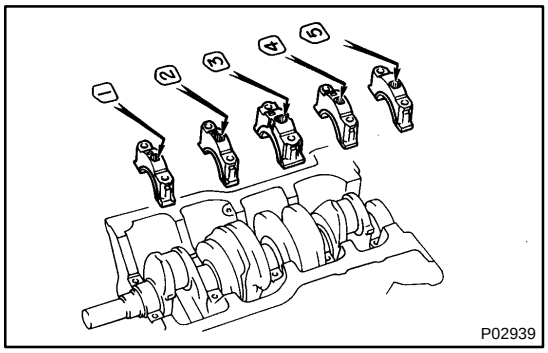

(b) Install the 5 main bearing caps in their proper locations.

HINT:

Each bearing cap has a number and front mark.

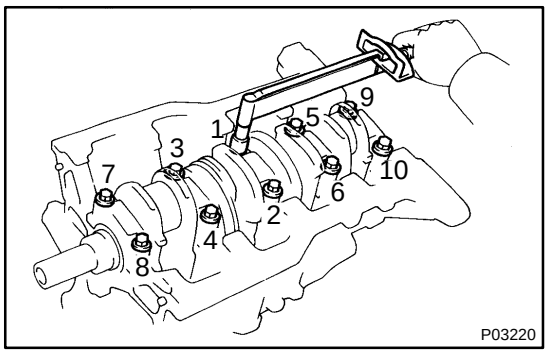

(c) Apply a light coat of engine oil on the threads and under the heads of the main bearing cap bolts.

(d) Install and uniformly tighten the 10 bolts of the main bearing cap in several passes, in the sequence shown.

Torque: 59 N·m (600 kgf·cm, 43 ft·lbf)

(e) Check that the crankshaft turns smoothly.

8. CHECK CRANKSHAFT THRUST CLEARANCE

(See page EM-92)

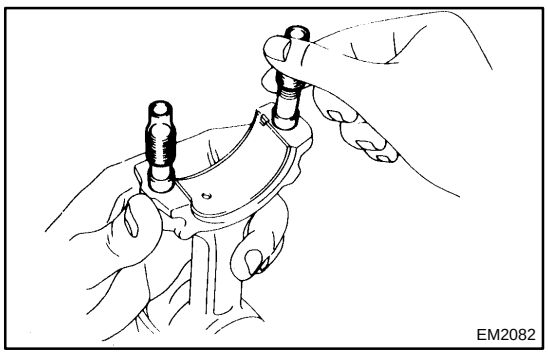

9. INSTALL PISTON AND CONNECTING ROD ASSEMBLES

(a) Cover the connecting rod bolts with a short piece of hose to protect the crankshaft from damage.

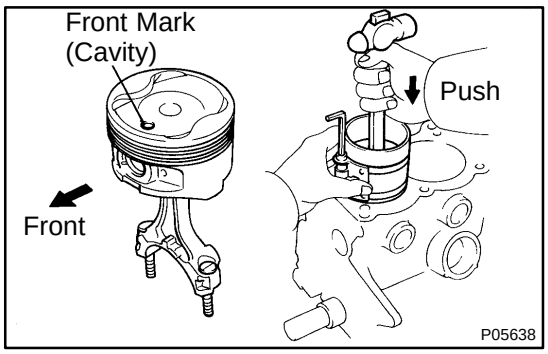

(b) Using a piston ring compressor, push the correctly numbered piston and connecting rod assemblies into each cylinder with the front mark of the piston facing forward.

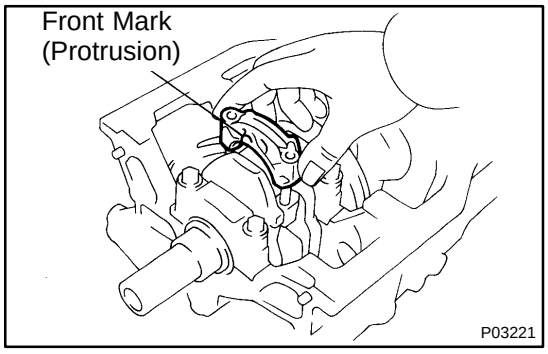

10. PLACE CONNECTING ROD CAP ON CONNECTING ROD

(a) Match the numbered connecting rod cap with the connecting rod.

(b) Install the connecting rod cap with the front mark facing forward.

11. INSTALL CONNECTING ROD CAP NUTS

HINT:

- The cap nuts are tightened in 2 progressive steps (steps (b) and (d)).
- If any one of the connecting rod bolts is broken or deformed, replace it.

(a) Apply a light coat of engine oil on the threads and under the nuts of the connecting rod cap.

(b) Install and alternately tighten the 2 cap nuts in several passes.

Torque: 25 N·m (250 kgf·cm, 18 ft·lbf)

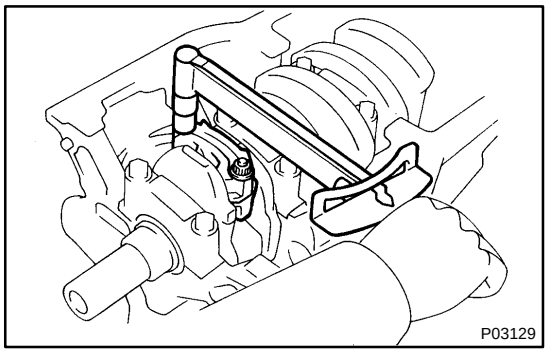

If any one of the cap nuts does not meet the torque specification, replace the connecting rod bolt and cap nut as a set.

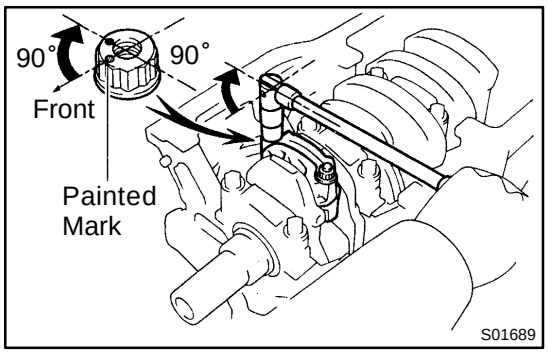

(c) Mark the front of the cap nut with the paint.

(d) Retighten the cap nuts 90° as shown.

(e) Check that the painted mark is now at a 90° angle to the front.

(f) Check that the crankshaft turns smoothly.

12. CHECK CONNECTING ROD THRUST CLEARANCE
(See page EM-92)

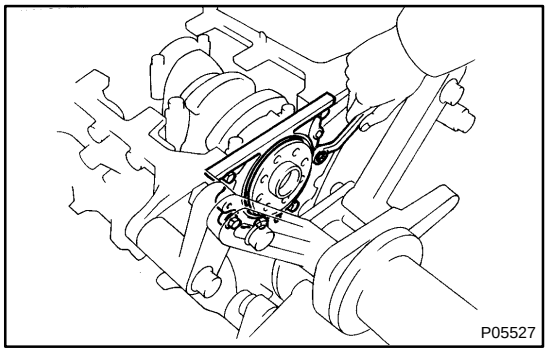

13. INSTALL REAR OIL SEAL RETAINER

Install a new gasket and the retainer with the 6 bolts.

Torque: 13 N·m (130 kgf·cm, 9 ft·lbf)

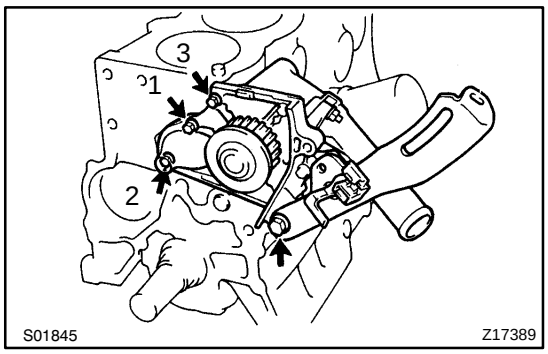

14. INSTALL WATER PUMP, WATER PUMP COVER ASSEMBLY AND GENERATOR DRIVE BELT ADJUSTING BAR

(a) Install a new O-ring to the water pump cover.

(b) Install the water pump with the 3 bolts. Tighten the bolts in the sequence shown.
Torque: 7.8 N·m (80 kgf·cm, 69 in.·lbf)

(c) Install the adjusting bar with the bolt.
Torque: 27 N·m (275 kgf·cm, 20 ft·lbf)

15. INSTALL KNOCK SENSOR 1
(See page SF-55)

16. INSTALL OIL COOLER
(See page LU-19)

17. INSTALL OIL PUMP AND AND OIL PAN
(See page LU-13)

18. INSTALL CYLINDER HEAD
(See page EM-53)

19. INSTALL TIMING BELT AND PULLEYS
(See page EM-19)

20. INSTALL PS PUMP BRACKET

Install the PS pump bracket with the 3 bolts.
Torque: 43 N·m (440 kgf·cm, 32 ft·lbf)

21. DISCONNECT ENGINE FROM ENGINE STAND

SA12K-01

REASSEMBLY

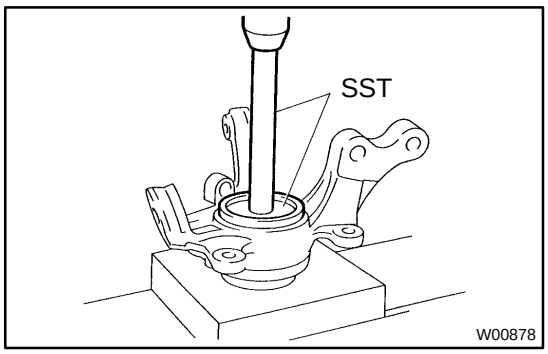

1. INSTALL NEW BEARING

(a) Using SST and a press, install a new bearing to the steering knuckle.
SST 09608-32010, 09950-70010 (09951-07150)

(b) Using snap ring pliers, install a new snap ring.

2. INSTALL DUST COVER

Using a torx socket (T30), install the dust cover with the 4 bolts.
Torque: 8.3 N·m (85 kgf·cm, 74 in.·lbf)

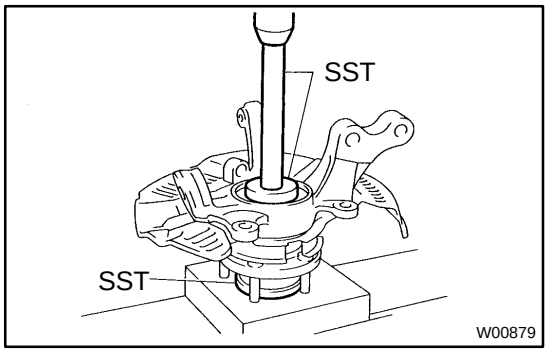

3. INSTALL FRONT AXLE HUB

Using SST and a press, install the axle hub.
SST 09608-32010, 09950-60010 (09951-00400), 09950-70010 (09951-07150)

4. INSTALL LOWER BALL JOINT

(a) Install the lower ball joint and torque the nut.
Torque: 103 N·m (1,050 kgf·cm, 76 ft·lbf)

(b) Install a new cotter pin.

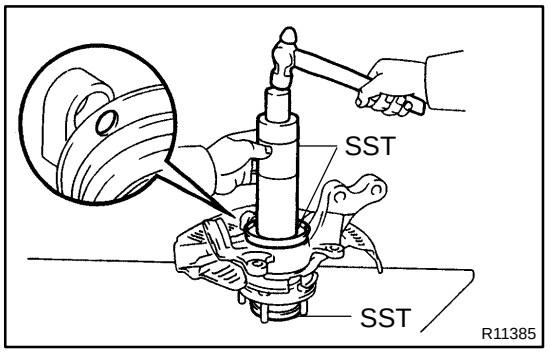

5. INSTALL NEW DUST DEFLECTOR

Using SST and a hammer, install a new dust deflector.
SST 09316-60011 (09316-00011, 09316-00041), 09608-32010

HINT:
Align the hole for the ABS speed sensor in the dust deflector with the one in the steering knuckle.

EM0JB-02

REASSEMBLY

HINT:

- Thoroughly clean all parts to be assembled.
- Before installing the parts, apply new engine oil to all sliding and rotating surfaces.
- Replace all gaskets and oil seals with new ones.

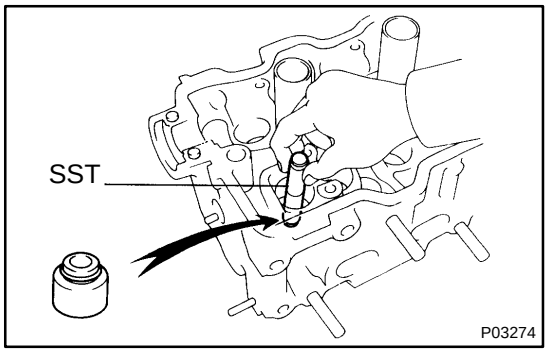

1. INSTALL VALVES

(a) Using SST, push in a new oil seal.
SST 09201-41020

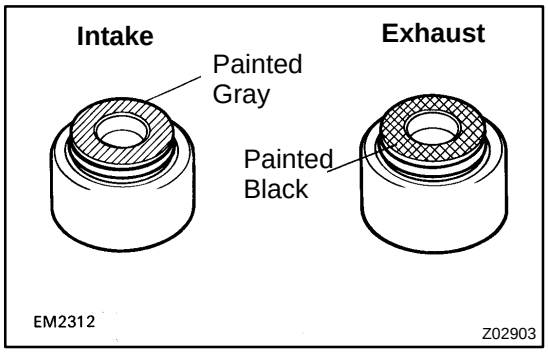

HINT:
The intake valve oil seal is gray and the exhaust valve oil seal is black.

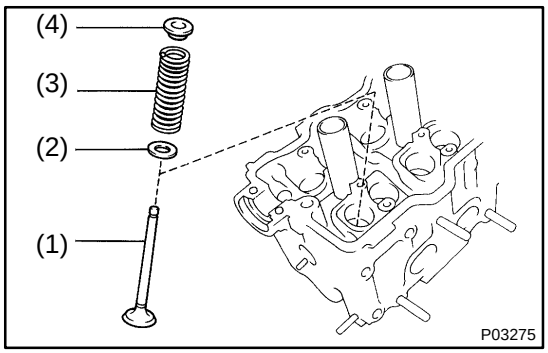

(b) Install these parts:
(1) Valve
(2) Spring seat
(3) Valve spring
(4) Spring retainer

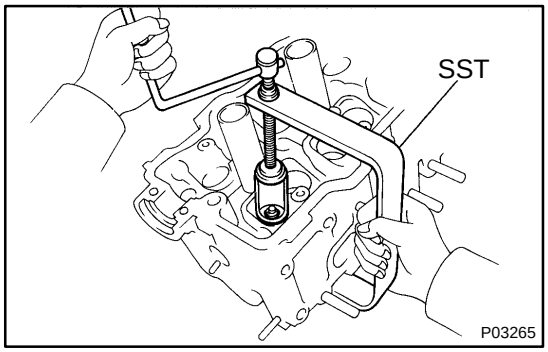

(c) Using SST, compress the valve spring and place the 2 keepers around the valve stem.
SST 09202-70020 (09202-00010)

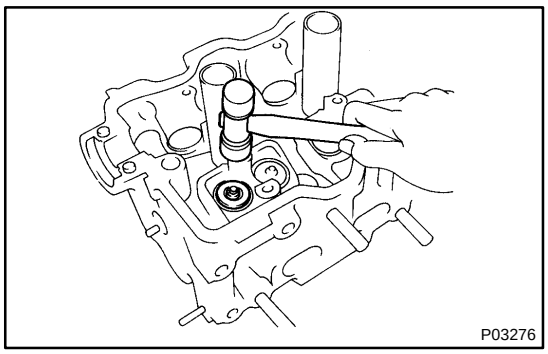

(d) Using a plastic-faced hammer, lightly tap the valve stem tip to assure a proper fit.

2. INSTALL VALVE LIFTERS AND SHIMS

(a) Install the valve lifter and shim.

(b) Check that the valve lifter rotates smoothly by hand.

IG088-02

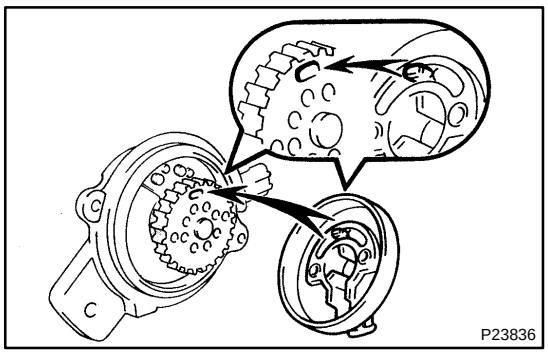

REASSEMBLY

1. INSTALL ROTOR

(a) Align the hollow of the signal rotor with the protrusion of the rotor.

(b) Install the rotor with the 2 screws.

2. INSTALL DISTRIBUTOR CAP

(a) Install a new packing to the distributor housing.

(b) Install the distributor cap with the 2 bolts.

CO191-01

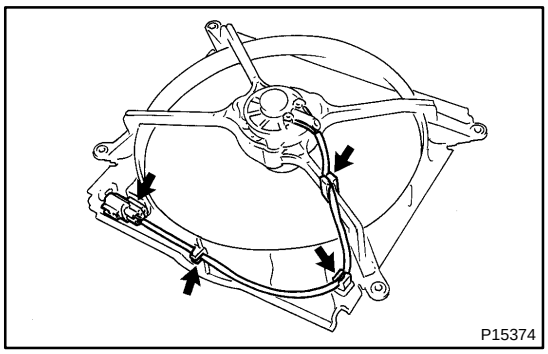

REASSEMBLY

1. INSTALL NO. 1 COOLING FAN MOTOR

(a) Install the fan motor with the 3 screws.

(b) Install the wire and connector to the fan shroud.

2. INSTALL NO. 1 COOLING FAN

Install the fan with the nut.

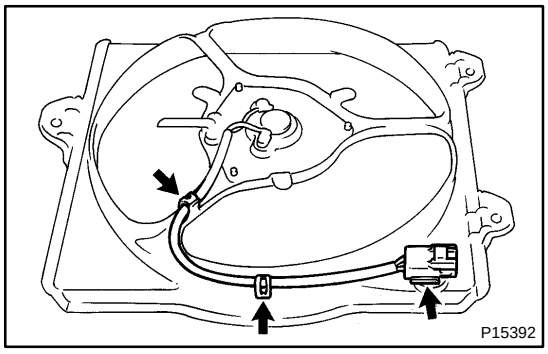

3. INSTALL NO. 2 COOLING FAN MOTOR

(a) Install the fan motor with the 3 screws.

(b) Install the wire and connector to the fan shroud.

4. INSTALL NO. 2 COOLING FAN MOTOR COVER

Install the motor cover with the 3 screws.

5. INSTALL NO. 2 COOLING FAN

Install the fan with the 3 screws.

SA12Q-03

REASSEMBLY

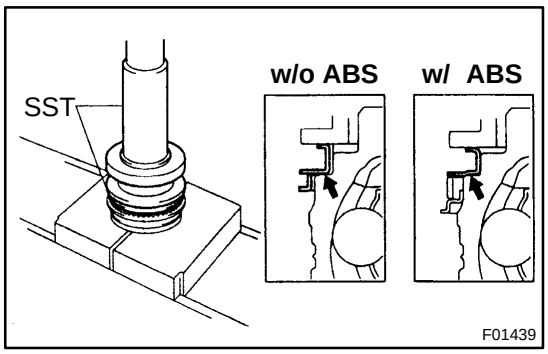

1. INSTALL NEW NO.2 DUST DEFLECTOR

Using SST and a press, install a new No.2 dust deflector.

SST 09309-36010, 09316-20011

NOTICE:

Be careful not to damage the ABS speed sensor rotor.

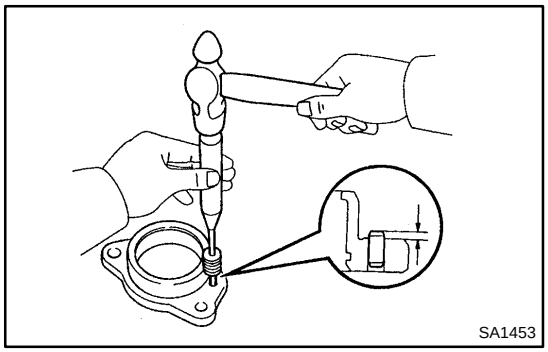

2. RH DRIVE SHAFT:
ASSEMBLE CENTER DRIVE SHAFT

(a) Using a pin punch and hammer, install the straight pin into the bearing case.

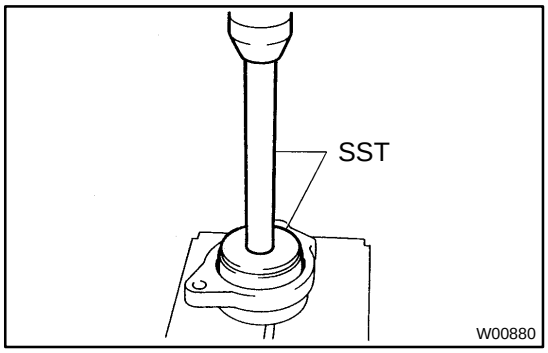

(b) Using SST and a press, install a new bearing into the bearing case.

SST 09950-60010 (09951-00640),
09950-70010 (09951-07150)

(c) Using a screwdriver, install a new snap ring.

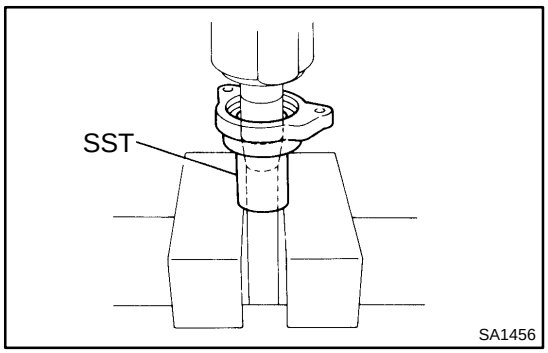

(d) Using SST and a press, install a new bearing into the bearing case assembly, then install them to the center drive shaft.

SST 09710-30021 (09710-03141)

(e) Using a snap ring expander, install a new snap ring.

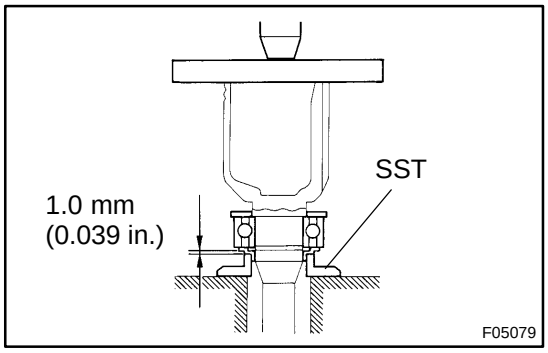

(f) Using SST, a steel plate and press, install a new dust cover.

SST 09506-35010

HINT:

The clearance between the dust cover and the bearing should be kept in the range shown in the illustration.

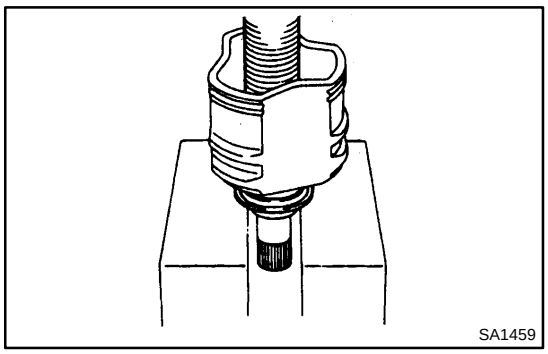

3. LH DRIVE SHAFT: INSTALL DUST COVER

Using a press, install a new dust cover.

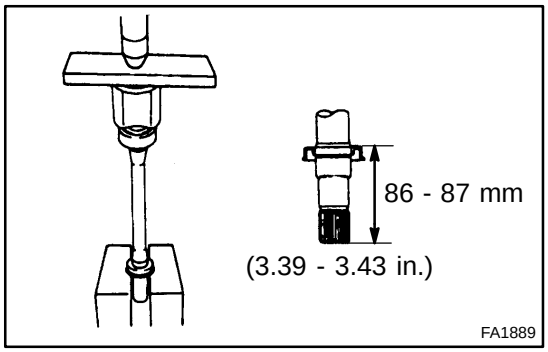

4. RH DRIVE SHAFT: INSTALL DUST COVER

Using a steel plate and press, install a new dust cover until the distance from the tip of the center drive shaft to the dust cover reaches the specification, as shown in the illustration.

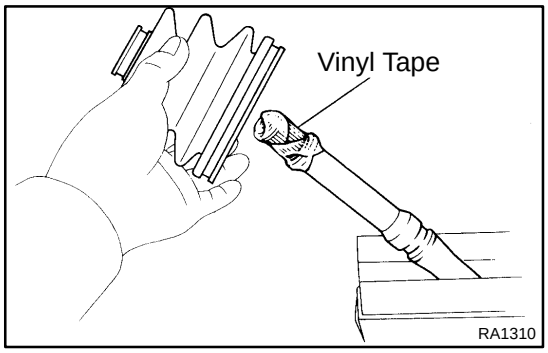

5. TEMPORARILY INSTALL BOOTS AND DAMPER (w/ DYNAMIC DAMPER)

HINT:

Before installing the outboard joint boot, wrap vinyl tape around the spline of the drive shaft to prevent damaging the 2 boots and damper.

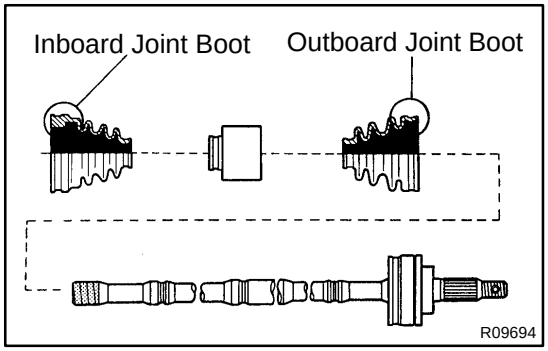

(a) Temporarily install a new outboard boot to the drive shaft.
(b) w/ Dynamic damper:
Temporarily install the dynamic damper to the drive shaft.
(c) Temporarily install a new inboard joint boot to the drive shaft.

6. INSTALL TRIPOD

(a) Using a snap ring expander, install a new snap ring.
(b) Place the beveled side of the tripod axial spline toward the outboard joint.
(c) Align the matchmarks placed before removal.
(d) Using a brass bar and hammer, install the tripod to the drive shaft.

NOTICE:

Do not tap the roller.

(e) Using a snap ring expander, install a new snap ring.

7. INSTALL BOOT TO OUTBOARD JOINT

Before assembling the boot, pack the outboard joint and boot with grease in the boot kit.

HINT:

Use the grease supplied in the boot kit.

Grease capacity (Color = Black):
120 - 130 g (4.2 - 4.6 oz.)

8. INSTALL INBOARD JOINT TULIP TO DRIVE SHAFT

(a) Pack the boot and inboard joint tulip with grease in the boot kit.

Use the grease supplied in the boot kit.

Grease capacity (Color = Yellow ocher):

M/T	232 - 242 g (8.2 - 8.5 oz.)
A/T	180 - 190 g (6.3 - 6.7 oz.)

(b) Align the matchmarks placed before removal, and install the inboard joint tulip to the drive shaft.

(c) Temporarily install the boot to the inboard joint tulip.

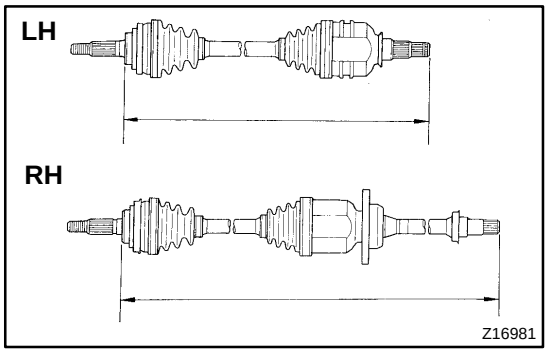

9. ASSEMBLE BOOT CLAMPS TO BOTH BOOTS

(a) Make sure the 2 boots are on the shaft groove.

(b) Make sure that the 2 boots are not stretched or contracted when the drive shaft is at standard length.

Drive shaft standard length:
M/T

LH	572.4 ± 5.0 mm (22.535 ± 0.197 in.)
RH	857.5 ± 5.0 mm (33.760 ± 0.197 in.)

A/T

LH	576.9 ± 5.0 mm (22.713 ± 0.197 in.)
RH	862.0 ± 5.0 mm (33.937 ± 0.197 in.)

(c) Place 4 new boot clamps on the 2 boots.

(d) Using a screwdriver, bend the band and lock it.

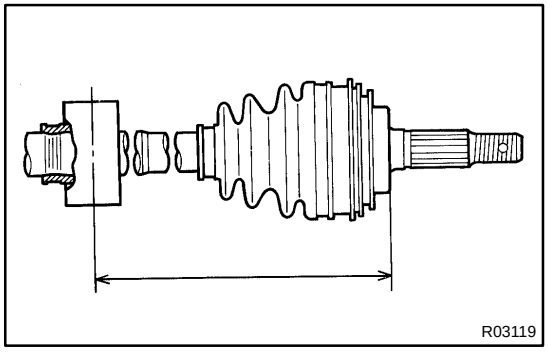

10. w/ DYNAMIC DAMPER (RH DRIVE SHAFT): ASSEMBLY DAMPER CLAMP

(a) Be sure the damper is on the shaft groove.

(b) Set the distance within the specification, as shown.

Distance: 200.0 ± 5.0 mm (7.874 ± 0.197 in.)

(c) Place a new damper clamp on the damper.

(d) Using a screwdriver, bend the band and lock it.

SF0WA-02

REASSEMBLY

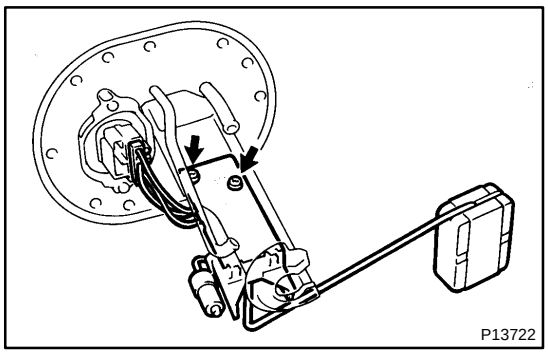

1. INSTALL CONNECTOR

Install a new gasket, the connector and connector support with the 2 screws.

2. INSTALL FUEL SENDER GAUGE TO FUEL PUMP BRACKET

(a) Install the sender gauge with the 2 screws.
(b) Connect the connector to the fuel pump bracket.

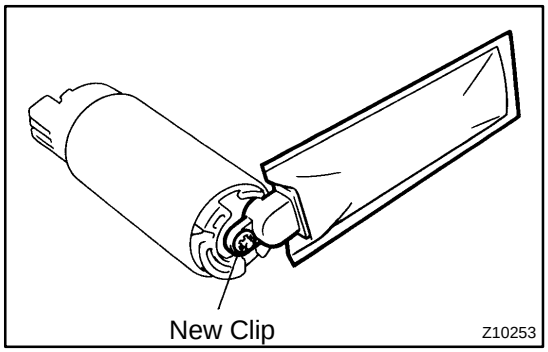

3. INSTALL FUEL PUMP FILTER TO FUEL PUMP

Install the pump filter with a new clip.

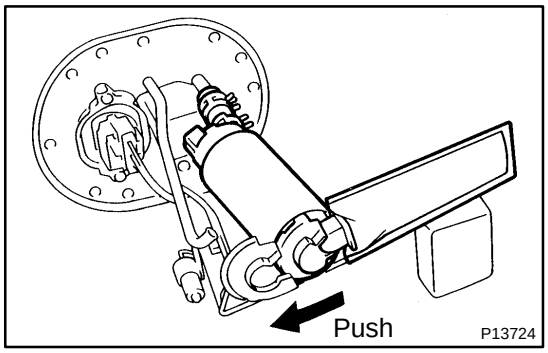

4. INSTALL FUEL PUMP TO FUEL PUMP BRACKET

(a) Connect the fuel hose to the outlet port of the fuel pump.
(b) Install the rubber cushion to the fuel pump.
(c) Install the fuel pump by pushing the lower side of the fuel pump.
(d) Install the lead wire.

CH062-03

REASSEMBLY

1. PLACE RECTIFIER END ON PULLEY

2. INSTALL ROTOR TO DRIVE END FRAME

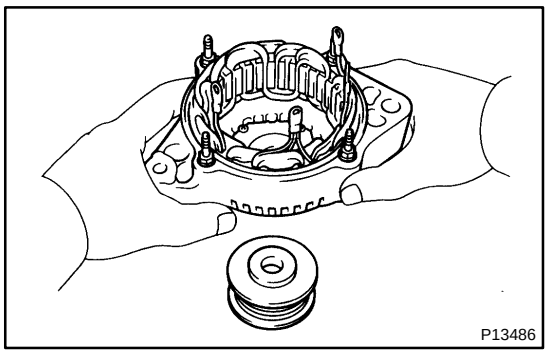

3. INSTALL RECTIFIER END FRAME

(a) M/T:

Install the generator washer to the rectifier end frame.

NOTICE:

Be careful of the generator washer installation direction.

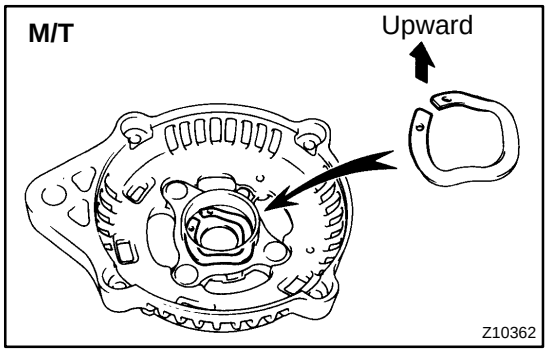

(b) A/T:

Place the generator washer on the rotor.

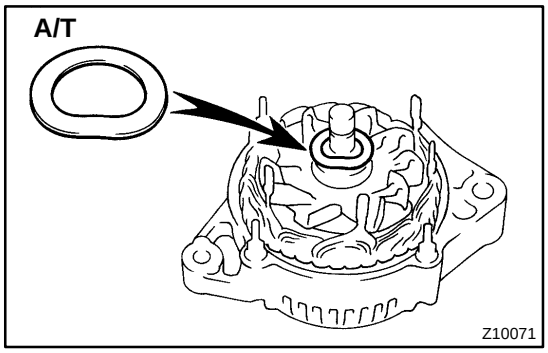

(c) Using a 29 mm socket wrench and press, slowly press in the rectifier end frame.

(d) Install the 4 nuts.

Torque: 4.5 N·m (46 kgf·cm, 40 in.·lbf)

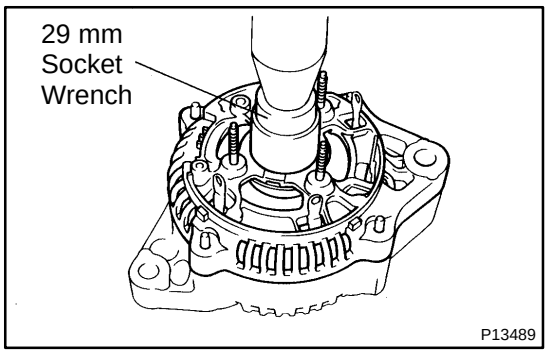

4. INSTALL PULLEY

(a) Install the pulley to the rotor shaft by tightening the pulley nut by hand.

(b) Hold SST (A) with a torque wrench, and tighten SST (B) clockwise to the specified torque.

SST 09820-63010

Torque: 39 N·m (400 kgf·cm, 29 ft·lbf)

(c) Check that SST (A) is secured to the pulley shaft.

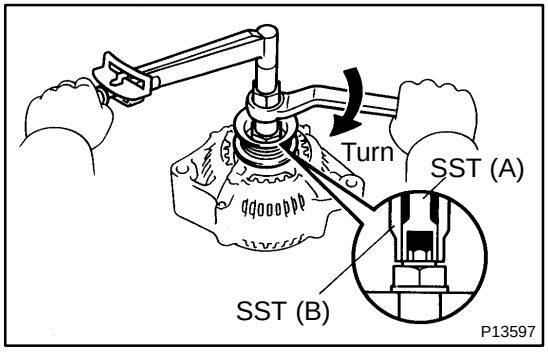

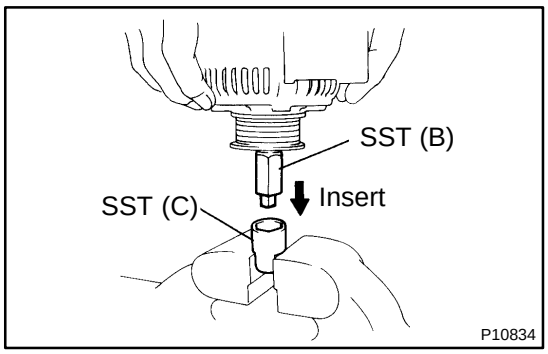

(d) Mount SST (C) in a vise.
(e) Insert SST (B) into SST (C), and attach the pulley nut to SST (C).

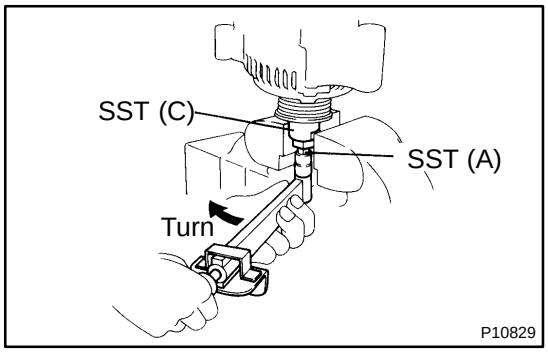

(f) To torque the pulley nut, turn SST (A) in the direction shown in the illustration.
Torque: 110 N·m (1,125 kgf·cm, 81 ft·lbf)
(g) Remove the generator from SST (C).

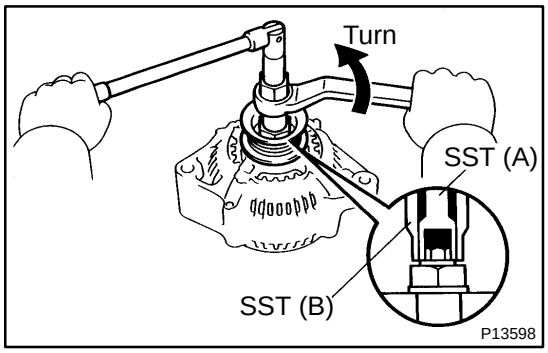

(h) Turn SST (B), and remove SST (A and B).

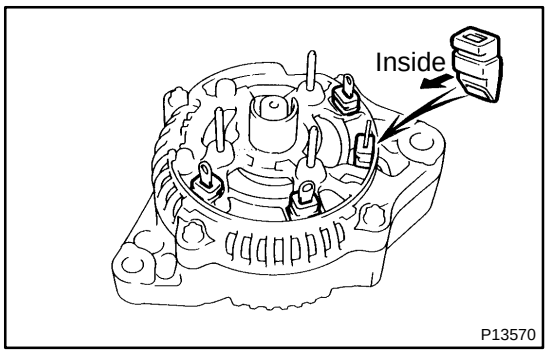

5. INSTALL RECTIFIER HOLDER
(a) Install the 4 rubber insulators on the lead wires.
NOTICE:
Be careful of the rubber insulators installation direction.

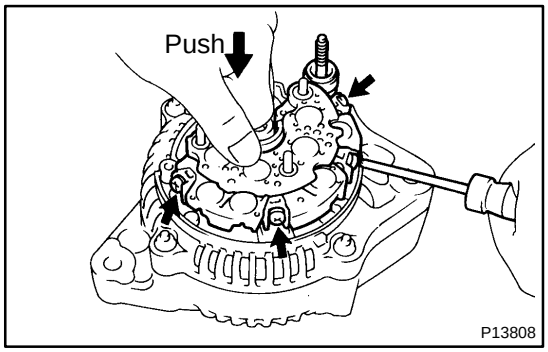

(b) Install the rectifier holder while pushing it with the 4 screws.
Torque:
M/T: 2.0 N·m (20 kgf·cm, 17 in.·lbf)
A/T: 2.9 N·m (30 kgf·cm, 25 in.·lbf)

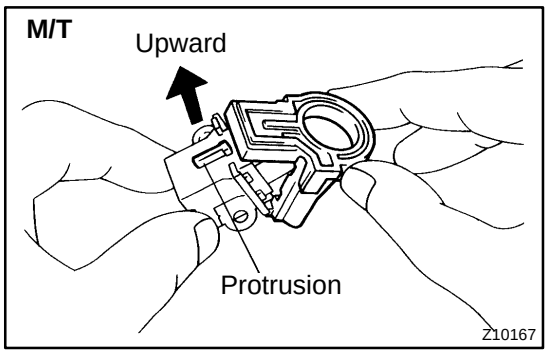

6. INSTALL VOLTAGE REGULATOR AND BRUSH HOLDER

(a) M/T:
Install the brush holder cover to the brush holder.

NOTICE:
Be careful of the holder installation direction.

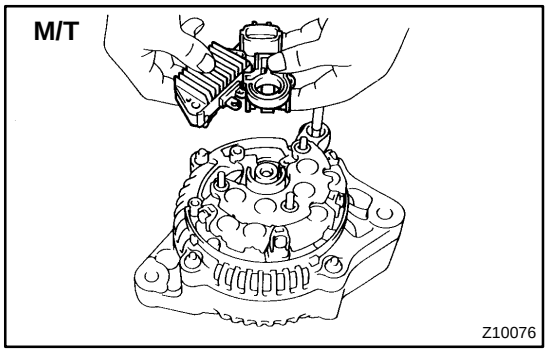

(b) M/T:
Place the voltage regulator together with the brush holder horizontally on the rectifier end frame.

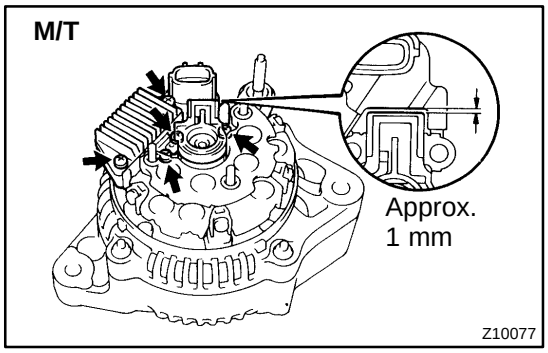

(c) M/T:
Install the 5 screws until there is a clearance of approx. 1 mm (0.04 in.) between the brush holder and voltage regulator.
Torque: 2.0 N·m (20 kgf·cm, 17 in.·lbf)

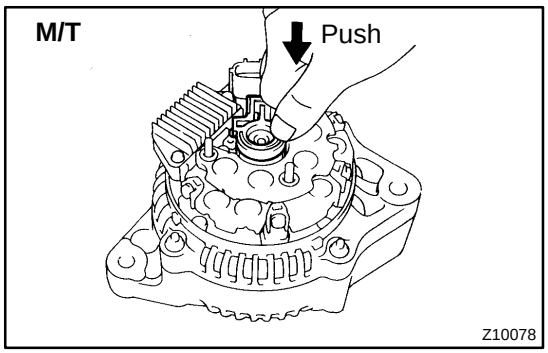

(d) M/T:
Fit the brush holder cover.

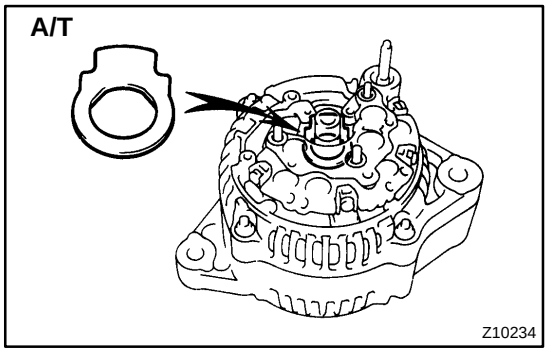

(e) A/T:
Place the seal plate on the rectifier end frame.

(f) A/T:
Place the voltage regulator and brush holder on the rectifier end frame.

NOTICE:
Be careful of the holder installation direction.

(g) A/T:
Install the 5 screws.
Torque: 2.0 N·m (20 kgf·cm, 17 in.·lbf)

(h) A/T:
Place the brush holder cover on the brush holder.

7. INSTALL REAR END COVER

(a) M/T:
Install the end cover with the 3 nuts.
Torque: 4.4 N·m (45 kgf·cm, 39 in.·lbf)

(b) A/T:
Install the end cover and plate terminal with the bolt and 3 nuts.
Torque:
Nut: 4.4 N·m (45 kgf·cm, 39 in.·lbf)
Bolt: 3.9 N·m (40 kgf·cm, 35 in.·lbf)

(c) Install the terminal insulator with the nut.
Torque: 4.1 N·m (42 kgf·cm, 36 in.·lbf)

8. CHECK THAT ROTOR ROTATES SMOOTHLY

LU083-01

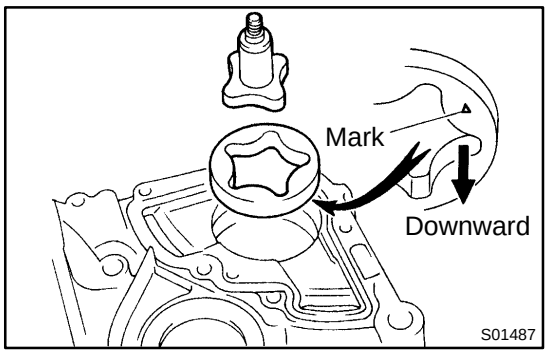

REASSEMBLY

1. INSTALL DRIVE AND DRIVEN ROTORS

(a) Place the drive and driven rotors into pump body with the mark on the driven rotor facing the pump body side.

(b) Install a new O-ring to the oil pump body.

(c) Install the oil pump body cover with the 2 bolts.
Torque: 8.8 N·m (90 kgf·cm, 78 in.·lbf)

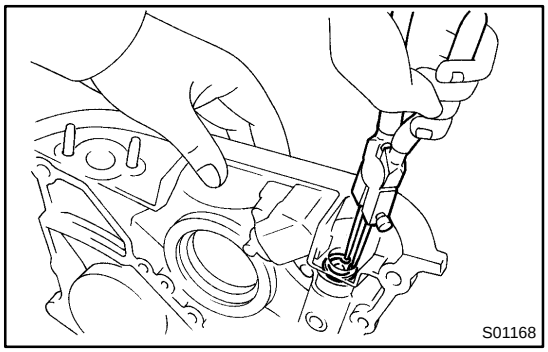

2. INSTALL RELIEF VALVE

(a) Insert the relief valve, spring and retainer into the oil pump body hole.

(b) Using snap ring pliers, install the snap ring.

THERMOSTAT

COMPONENTS

CO0GD-02

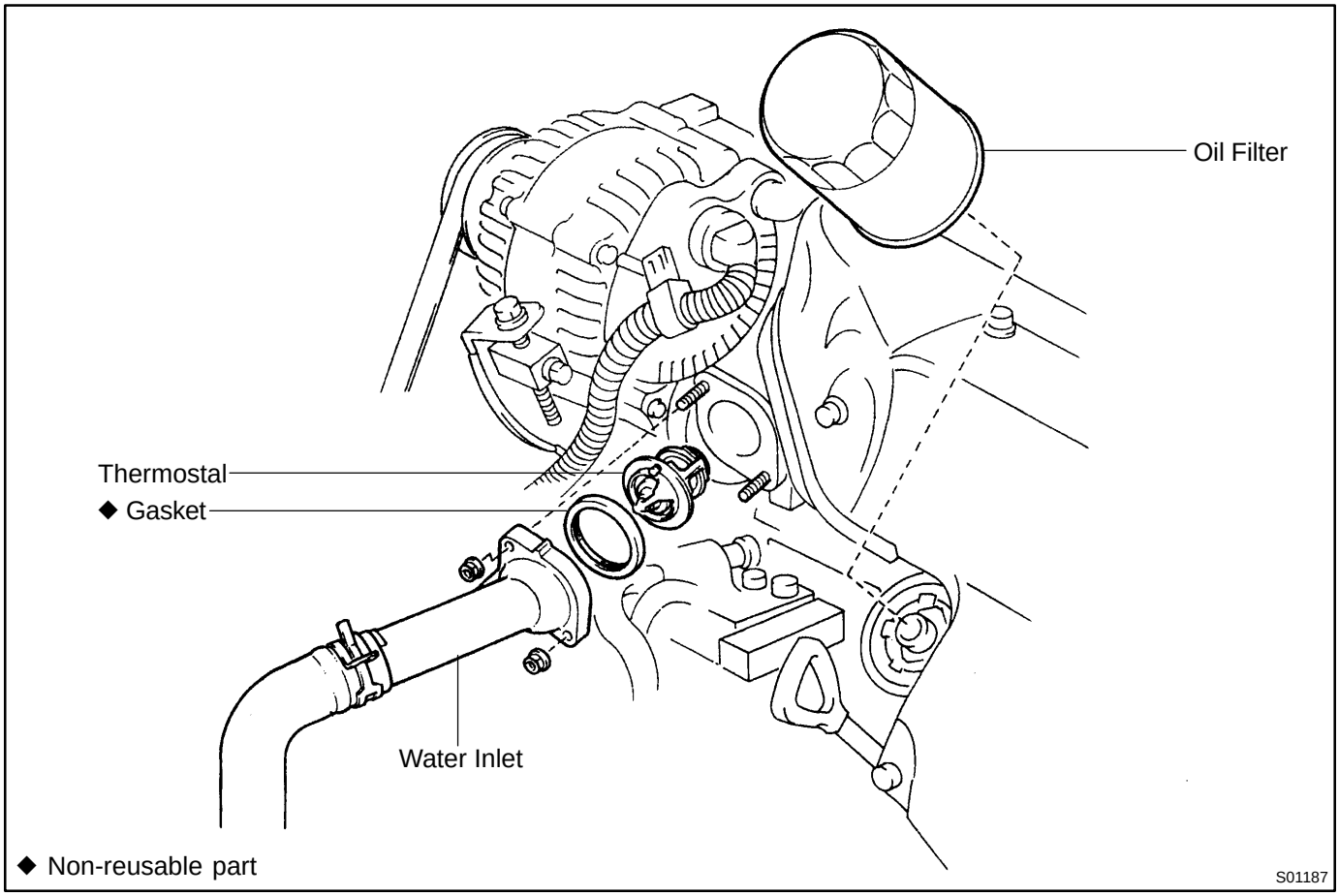

CO0GM-03

REASSEMBLY

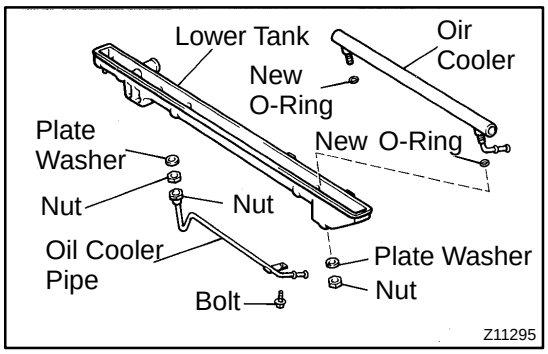

1. A/T:

INSTALL OIL COOLER TO LOWER TANK

(a) Install 2 new O-rings to the oil cooler.

(b) Install the oil cooler with the O-rings to the lower tank.

(c) Install the 2 plate washers and nuts.

Torque: 8.3 N·m (85 kgf·cm, 74 in.·lbf)

(d) Install the cooler pipe with the nut and bolt.

Torque: 14.7 N·m (150 kgf·cm, 11 ft·lbf) for nut

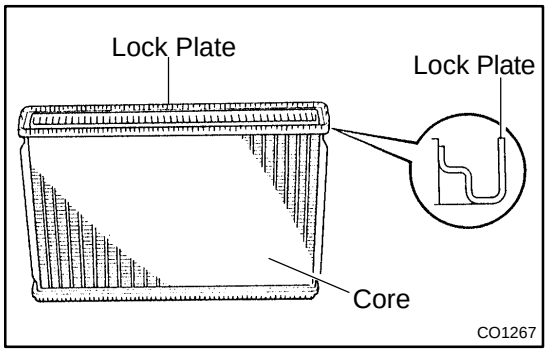

2. INSPECT LOCK PLATE

Inspect the lock plate for damage.

HINT:

- If the sides of the lock plate groove are deformed, reassembly of the tank will be impossible.
- Therefore, first correct any deformation with pliers or similar object. Water leakage will result if the bottom of the lock plate groove is damaged or dented, therefore, repair or replace if necessary.

NOTICE:

The radiator can only be recaulked 2 times. After the 2nd time, the radiator core must be replaced.

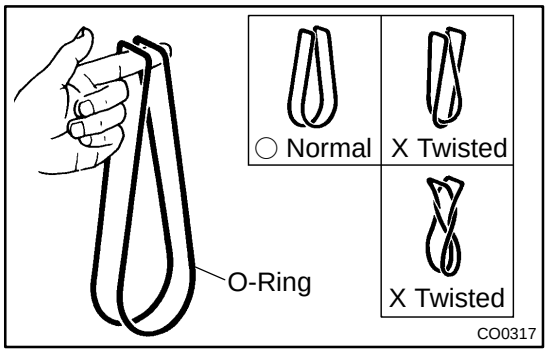

3. INSTALL NEW O-RINGS AND TANKS

(a) After checking that there are no foreign objects in the lock plate groove, install the new O-ring without twisting it.

HINT:

When cleaning the lock plate groove, lightly rub it with sand paper without scratching it.

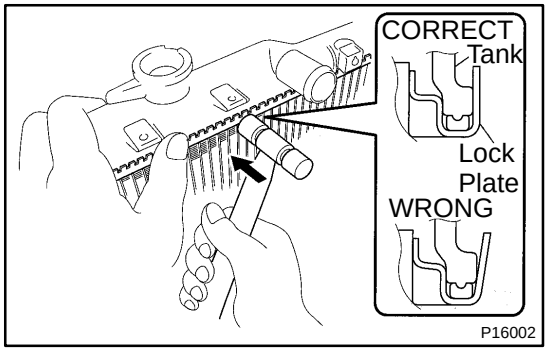

(b) Install the tank without damaging the O-ring.

(c) Tap the lock plate with a soft-faced hammer so that there is no gap between it and the tank.

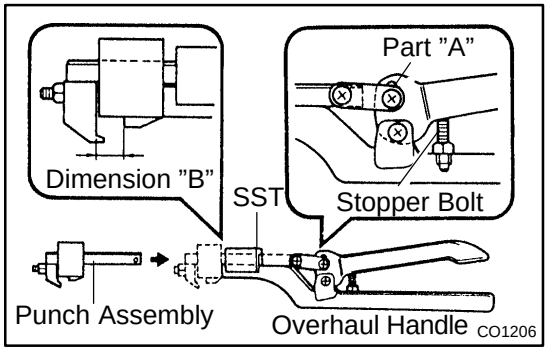

4. ASSEMBLE SST

SST 09230-01010, 09231-14010

(a) Install the punch assembly to the overhaul handle, inserting it in the hole in part "A" as shown in the illustration.

(b) While gripping the handle, adjust the stopper bolt so that dimension "B" is as shown in the illustration.

Dimension:

8.4 mm (0.331 in)

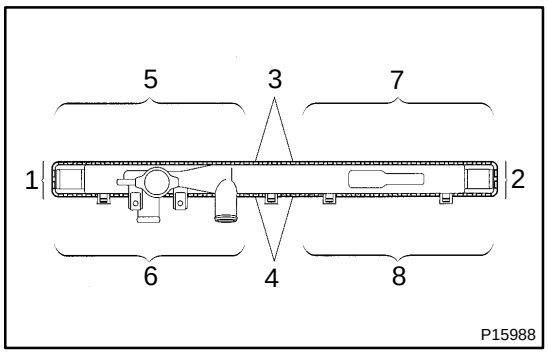

5. CAULK LOCK PLATE

(a) Lightly press SST against the lock plate in the order shown in the illustration. After repeating this a few times, fully caulk the lock plate by squeezing the handle until stopped by the stopper plate.
SST 09230-01010

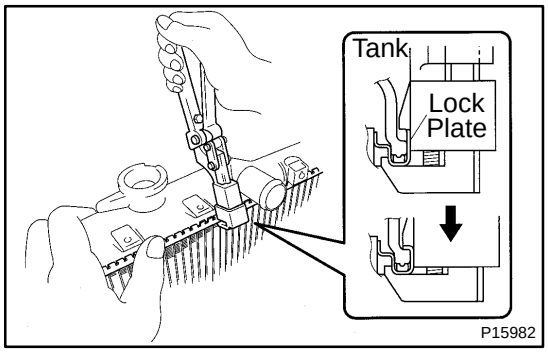

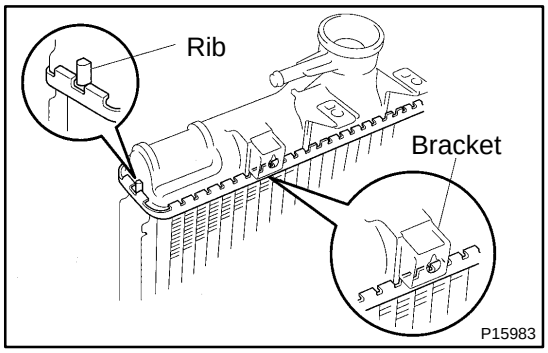

HINT:

- Do not stake the areas protruding around the pipes, brackets or tank ribs.

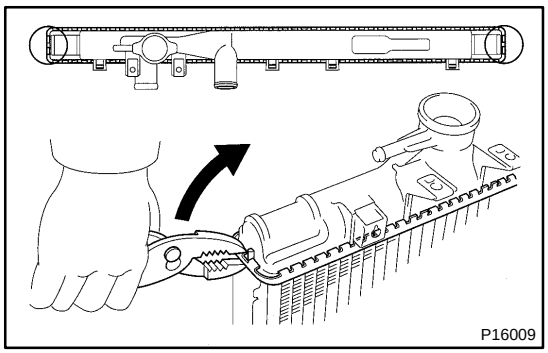

- The points shown in the illustration and oil cooler near here (A/T) cannot be staked with the SST. Use pliers or similar object and be careful not to damage the core plates.

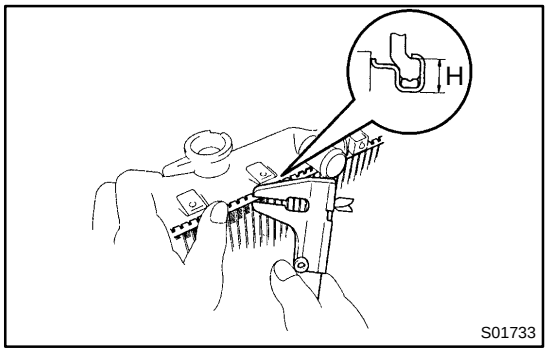

(b) Check the lock plate height (H) after completing the caulking.
Plate height:
7.40 - 7.80 mm (0.2913 - 0.3071 in.)

If not within the specified height, adjust the stopper bolt of the handle again and caulk again.

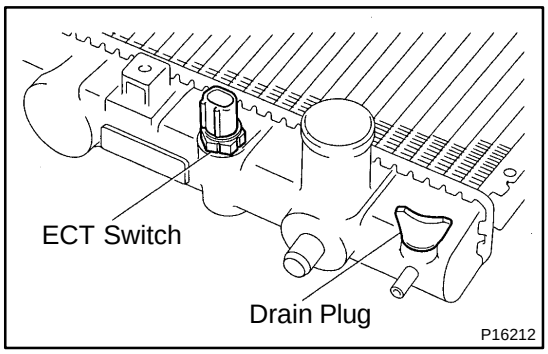

6. INSTALL ECT SWITCH

(a) Install a new O-ring to the ECT switch.

(b) Install the ECT switch.

7. INSTALL DRAIN PLUG

(a) Install a new O-ring to the drain plug.

(b) Install the drin plug.

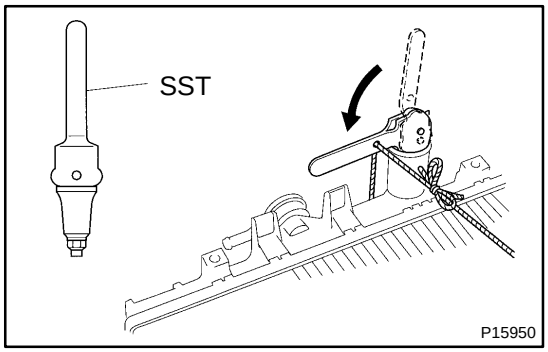

8. INSPECT FOR WATER LEAKS

(a) Tighten the drain plug.

(b) Plug the inlet and outlet pipes of the radiator with SST.
SST 09230-01010

(c) Using a radiator cap tester, apply pressure to the radiator.
Test pressure:
177 kPa (1.8 kgf/cm^2, 26 psi)

(d) Submerge the radiator in water.

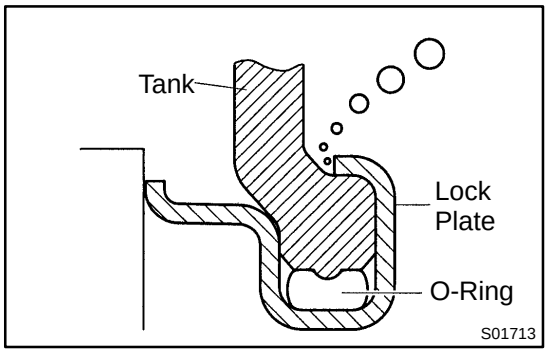

(e) Inspect for leaks.

HINT:

On radiators with resin tanks, there is a clearance between the tank and lock plate where a minute amount of air will remain, giving the appearance of an air leak when the radiator is submerged in water. Therefore, before doing the water leak test, first swish the radiator around in the water until all air bubbles disappear.

ST07U-03

REASSEMBLY

Reassembly is in the reverse order of disassembly (See page ST-5).

EM1PD-01

REASSEMBLY

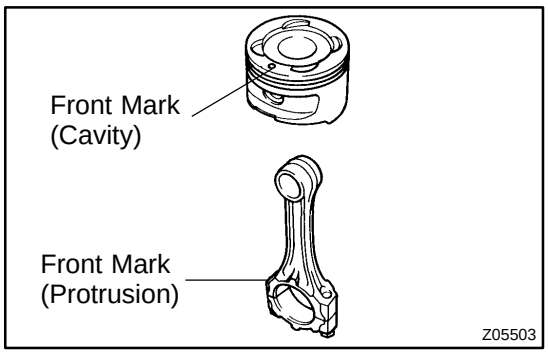

1. ASSEMBLE PISTON AND CONNECTING ROD

(a) Coat the piston pin and piston pin holes with engine oil.

(b) Align the front marks of the piston and connecting rod, and push in the piston pin with your thumb.

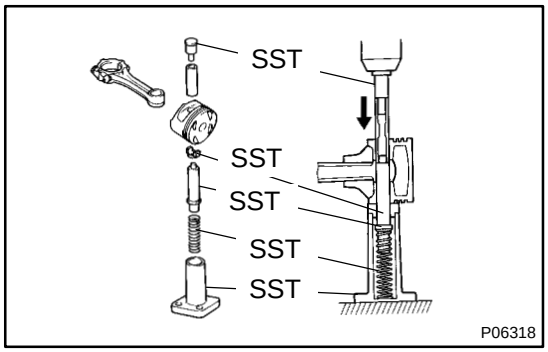

(c) Using SST, press in the piston pin.
SST 09221-25024 (09221-00020, 09221-00030, 09221-00181, 09221-00190, 09221-00200)

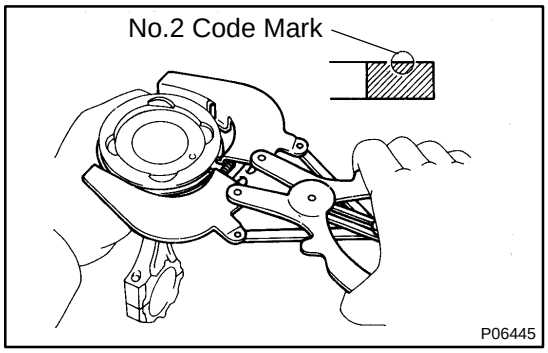

2. INSTALL PISTON RINGS

(a) Install the oil ring expander and 2 side rails by hand.

(b) Using a piston ring expander, install the 2 compression rings with the code mark facing upward (No.2 compression ring only).
Code mark (No.2 compression ring only):
2R or T

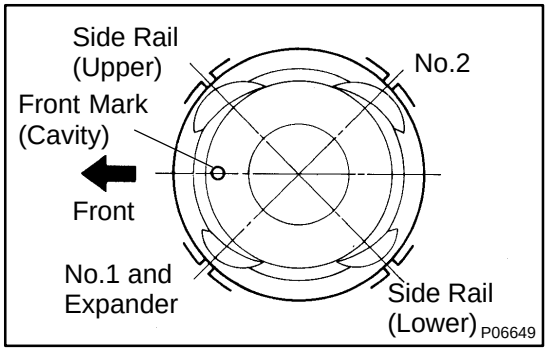

(c) Position the piston rings so that the ring ends are as shown.

NOTICE:
Do not align the ring ends.



3. INSTALL BEARINGS

(a) Align the bearing claw with the groove of the connecting rod or connecting cap.

(b) Install the bearings in the connecting rod and connecting rod cap.

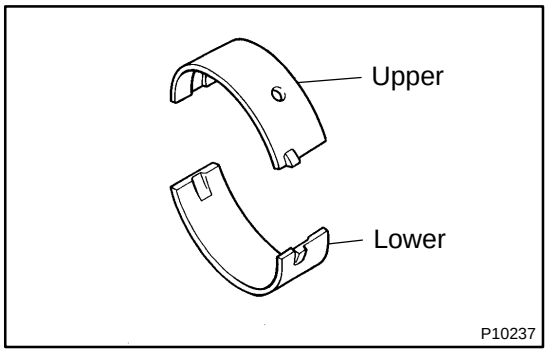

HINT:

- Thoroughly clean all parts to be assembled.
- Before installing the parts, apply new engine oil to all sliding and rotating surfaces.
- Replace all gaskets, O-rings and oil seals with new parts.

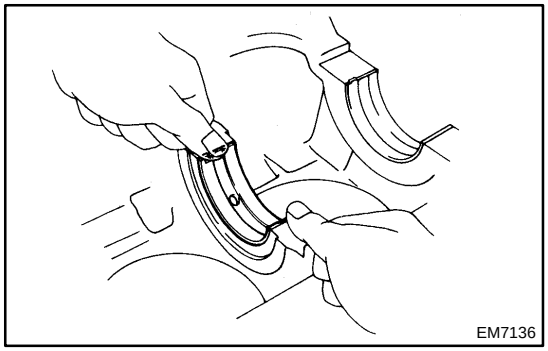

4. INSTALL MAIN BEARINGS

HINT:

Upper bearings have an oil groove and oil holes; lower bearings do not.

(a) Align the bearing claw with the claw groove of the cylinder block, and push in the 5 upper bearings.

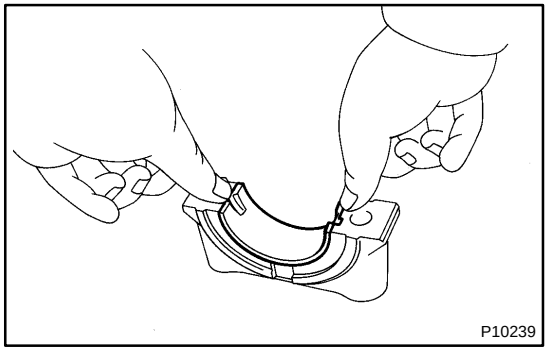

(b) Align the bearing claw with the claw groove of the main bearing cap, and push in the 5 lower bearings.

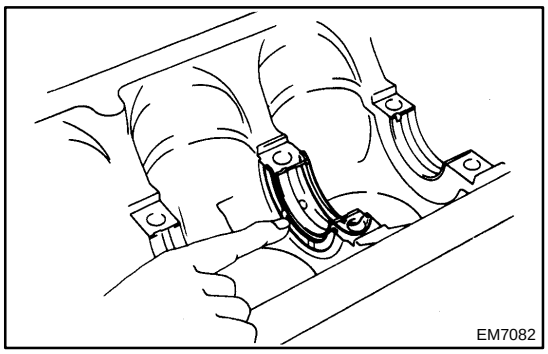

5. INSTALL UPPER THRUST WASHERS

Install the 2 thrust washers under the No.3 journal position of the cylinder block with the oil grooves facing outward.

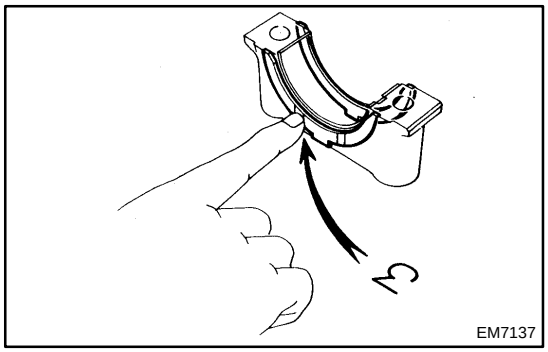

6. PLACE CRANKSHAFT ON CYLINDER BLOCK

7. INSTALL MAIN BEARING CAPS AND LOWER THRUST WASHERS

(a) Install the 2 thrust washers on the No.3 bearing cap with the grooves facing outward.

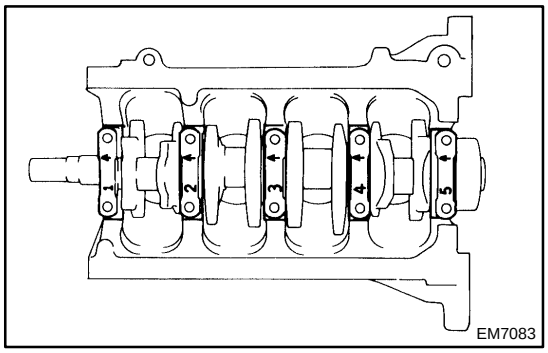

(b) Install the 5 main bearing caps in their proper locations.

HINT:

Each bearing cap has a number and front mark.

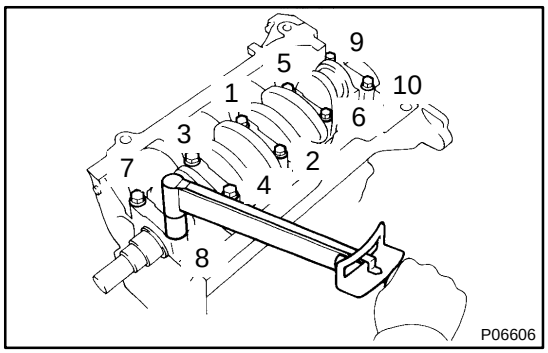

(c) Apply a light coat of engine oil on the threads and under the heads of the main bearing cap bolts.

(d) Install and uniformly tighten the 10 bolts of the main bearing cap bolts, in several passes, in the sequence shown.

Torque: 60 N·m (610 kgf·cm, 44 ft·lbf)

(e) Check that the crankshaft turns smoothly.

(f) Check the crankshaft thrust clearance.

Using a dial indicator, measure the thrust clearance while prying the crankshaft back and forth with a screwdriver.

Standard thrust clearance:

0.015 - 0.220 mm (0.0006 - 0.0087 in.)

Maximum thrust clearance:

0.30 mm (0.0118 in.)

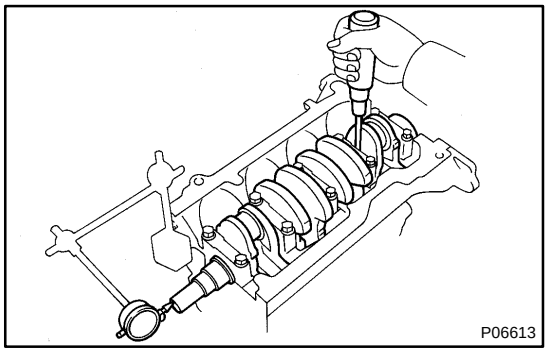

If the thrust clearance is greater than maximum, replace the thrust washers as a set.

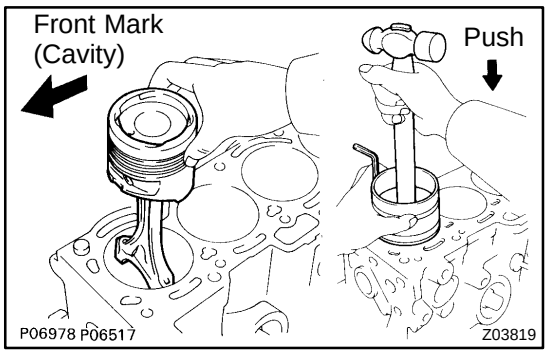

8. INSTALL PISTON AND CONNECTING ROD ASSEMBLIES

Using a piston ring compressor, push the correctly numbered piston and connecting rod assemblies into each cylinder with the front mark of the piston facing forward.

9. PLACE CONNECTING ROD CAP ON CONNECTING ROD

(a) Match the numbered connecting rod cap with the connecting rod.

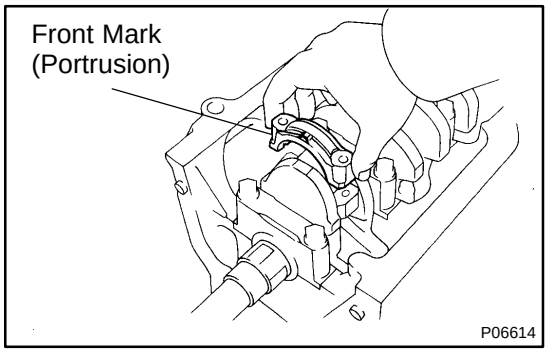

(b) Install the connecting rod cap with the front mark facing forward.

10. INSTALL CONNECTING ROD CAP BOLTS

HINT:

- The cap bolts are tightened in 2 progressive steps (steps (b) and (d)).
- If any one of the connecting rod bolts is broken or deformed, replace it.

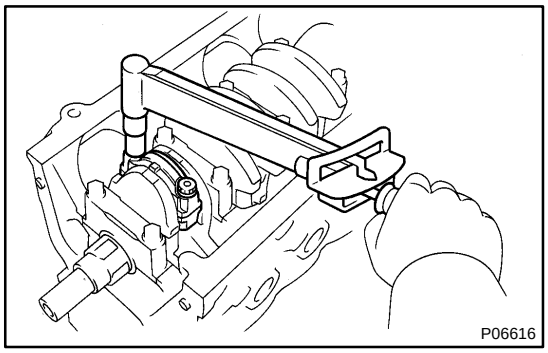

(a) Apply a light coat of engine oil on the threads and under the heads of the connecting rod cap bolts.

(b) Install and alternately tighten the bolts of the connecting rod cap in several passes.

Torque: 25 N·m (250 kgf·cm, 18 ft·lbf)

If any one of the connecting rod cap bolts does not meet the torque specification, replace the cap bolt.

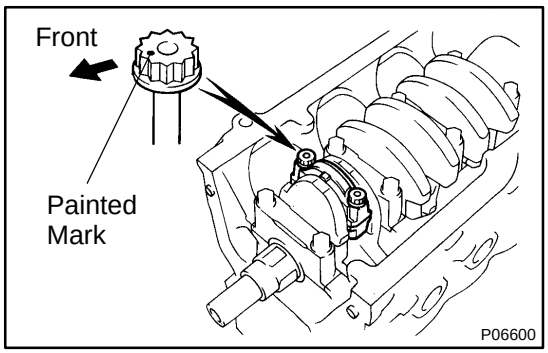

(c) Mark the front of the connecting rod cap bolt with paint.

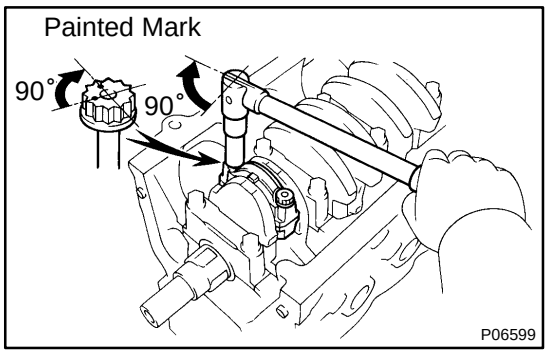

(d) Retighten the connecting rod cap bolts 90° as shown.
(e) Check that the painted mark is now at a 90° angle to the front.
(f) Check that the crankshaft turns smoothly.
(g) Check the connecting rod thrust clearance.
Using a dial indicator, measure the thrust clearance while moving the connecting rod back and forth.
Standard thrust clearance:
0.15 - 0.25 mm (0.0059 - 0.0098 in.)
Maximum thrust clearance:
0.30 mm (0.0118 in.)

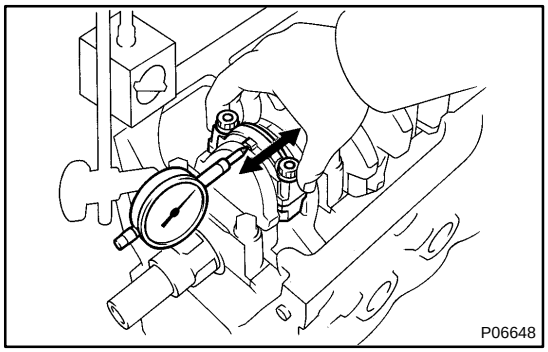

If the thrust clearance is greater than maximum, replace the connecting rod assembly. If necessary, replace the crankshaft.

11. INSTALL REAR OIL SEAL RETAINER

Install a new gasket and the retainer with the 6 bolts.
Torque: 9.3 N·m (95 kgf·cm, 82 in.·lbf)

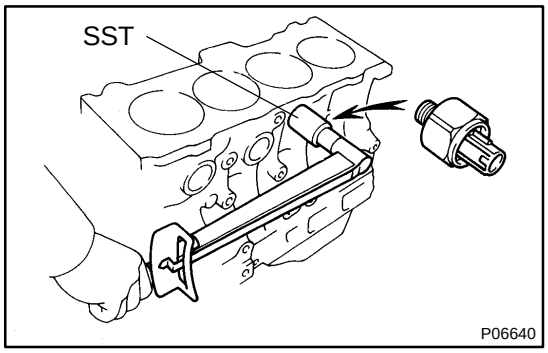

12. INSTALL OIL PAN AND OIL PUMP
(See page LU-14)

13. INSTALL KNOCK SENSOR

Using SST, install the knock sensor.
SST 09816-30010
Torque: 37 N·m (380 kgf·cm, 27 ft·lbf)

14. INSTALL OIL PRESSURE SWITCH
(See page LU-14)

15. INSTALL ENGINE COOLANT DRAIN PLUG
(See page CO-2)

16. INSTALL OIL FILTER
(See page LU-2)

17. INSTALL WATER PUMP
(See page CO-7)

18. INSTALL RH ENGINE MOUNTING BRACKET
Torque: 51 N·m (525 kgf·cm, 38 ft·lbf)

19. INSTALL GENERATOR BRACKET
Torque: 26 N·m (270 kgf·cm, 20 ft·lbf)

20. INSTALL CYLINDER HEAD
(See page EM-44)

21. INSTALL TIMING BELT AND PULLEYS
(See page EM-17)

22. DISCONNECT ENGINE FROM ENGINE STAND

23. INSTALL REAR END PLATE
Torque: 5.6 N·m (55 kgf·cm, 48 in.·lbf)

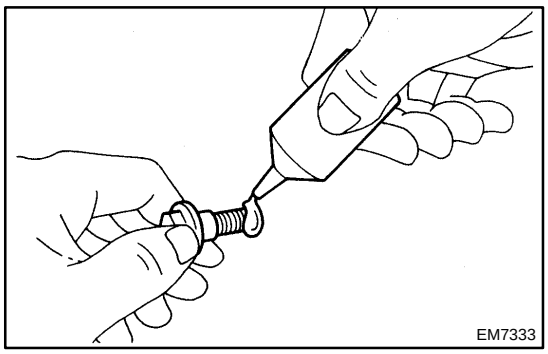

24. M/T:
INSTALL FLYWHEEL

(a) Apply adhesive to 2 or 3 threads of the mounting bolt end.
Adhesive:
Part No.08833-00070, Adhesive 1324,
THREE BOND 1324 or equivalent

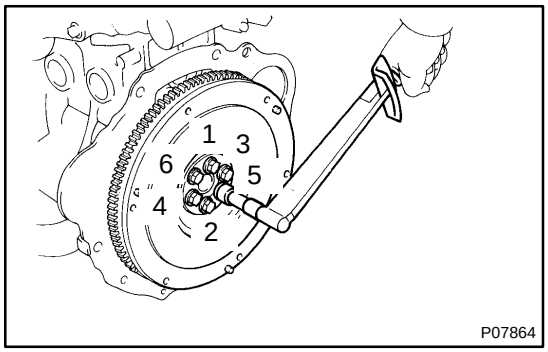

(b) Install the flywheel on the crankshaft.
(c) Install and uniformly tighten the 6 mounting bolts, in several passes, in the sequence shown.
Torque: 78 N·m (800 kgf·cm, 58 ft·lbf)

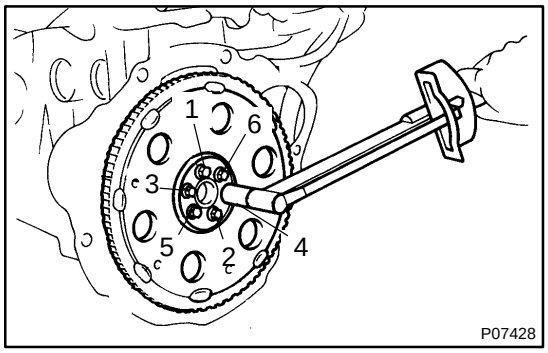

25. A/T:
INSTALL DRIVE PLATE
(See procedure in step 14)
Torque: 64 N·m (650 kgf·cm, 47 ft·lbf)

IG0GQ-01

REASSEMBLY

1. INSTALL CONDENSER

Install the condenser with the screw.

2. INSTALL CORD CLAMP

(a) Install the cord clamp with the screw.

(b) Connect the connector to the cord clamp.

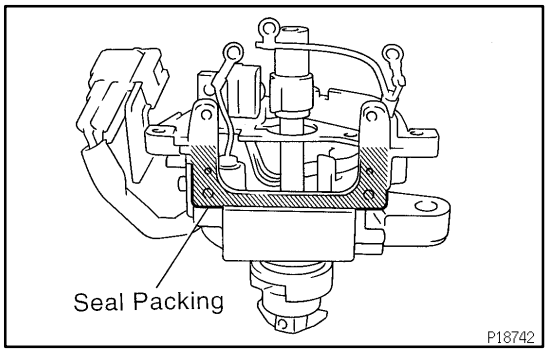

3. INSTALL IGNITION COIL

(a) Remove any old packing (FIPG) material.

(b) Apply seal packing to the ignition coil installing surface of the housing as shown in the illustration.

Seal packing:
Part No. 08826-00080 or equivalent

(c) Install the ignition coil with the 4 screws.

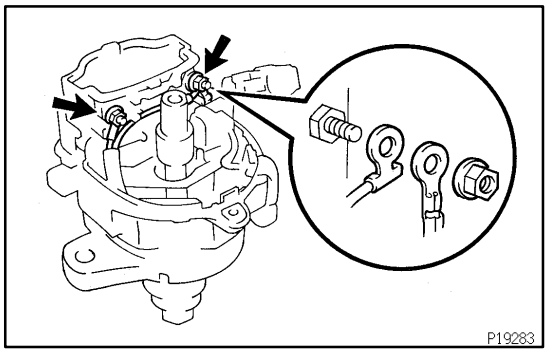

(d) Connect the 3 wires to the ignition coil terminals with the 2 nuts as shown in the illustration.

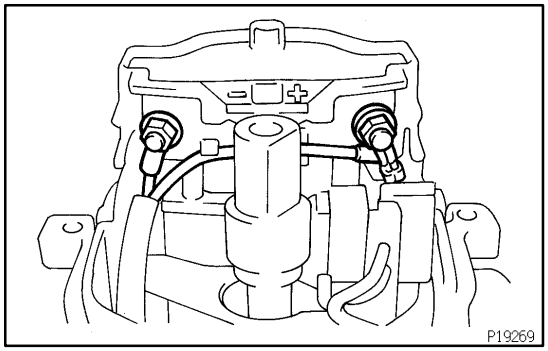

NOTICE:

When connecting the wires to the ignition coil, insert both properly into their grooves found on the side of the ignition coil.Be sure the wires do not contact with signal rotor or distributor housing.

4. INSTALL IGNITION COIL DUST COVER

(a) Install a new gasket to the distributor housing.

(b) Install the dust cover.

5. INSTALL ROTOR

6. INSTALL DISTRIBUTOR CAP

Install the distributor cap with the 3 bolts.

CO0ZS-01

REASSEMBLY

Reassembly is in the reverse order of disassembly (See page CO-28).

SA1W6-02

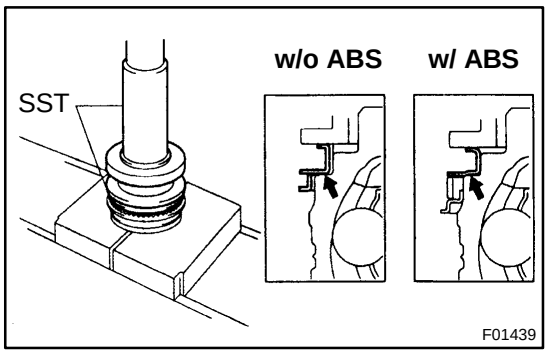

REASSEMBLY

1. INSTALL NEW NO.2 DUST DEFLECTOR

Using SST and a press, install a new No.2 dust deflector.

SST 09309-36010, 09316-20011

NOTICE:

Be careful not to damage the ABS speed sensor rotor (w/ ABS).

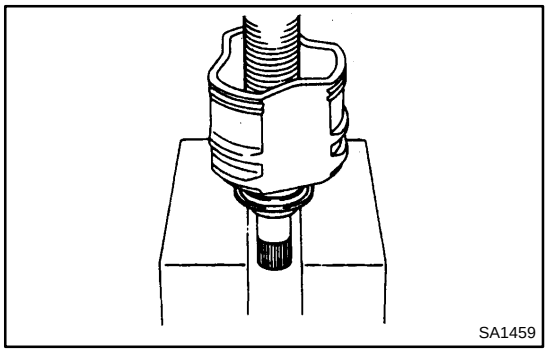

2. INSTALL NEW DUST COVER

Using a press, install a new dust cover to the inboard joint tulip.

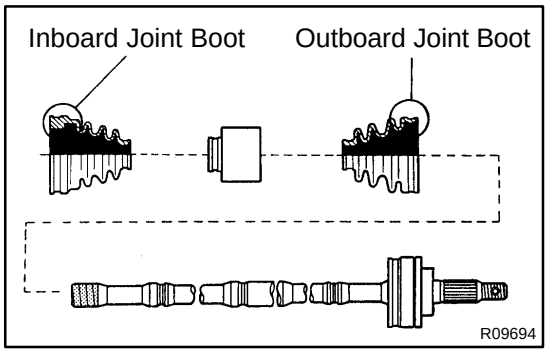

3. TEMPORARILY INSTALL BOOTS AND DAMPER (RH DRIVE SHAFT)

HINT:

Before installing the outboard joint boot, wrap vinyl tape around the spline of the drive shaft to prevent damaging the 2 boots and damper.

(a) Temporarily install a new outboard joint boot to the drive shaft.

(b) w/ Dynamic damper:
Temporarily install the dynamic damper to the drive shaft.

(c) Temporarily install a new inboard joint boot to the drive shaft.

4. INSTALL TRIPOD

(a) Place the beveled side of the tripod axial spline toward the outboard joint.

(b) Align the matchmarks placed before removal.

(c) Using a brass bar and hammer, tap in the tripod to the drive shaft.

NOTICE:

Do not tap the roller.

(d) Using a snap ring expander, install a new snap ring.

5. INSTALL BOOT TO OUTBOARD JOINT

Before assembling the boot, pack the outboard joint and boot with grease in the boot kit.

Grease capacity (Color = Black):
120 - 130 g (4.2 - 4.6 oz.)

6. INSTALL INBOARD JOINT TULIP TO FRONT DRIVE SHAFT

(a) Pack the inboard joint tulip and boot with grease in the boot kit.

HINT:
Use the grease supplied in the boot kit.

Grease capacity (Color = Yellow ocher):
180 - 190 g (6.3 - 6.7 oz.)

(b) Align the matchmarks placed before removal.
(c) Install the inboard joint tulip to the drive shaft.
(d) Temporarily install the boot to the inboard joint tulip.

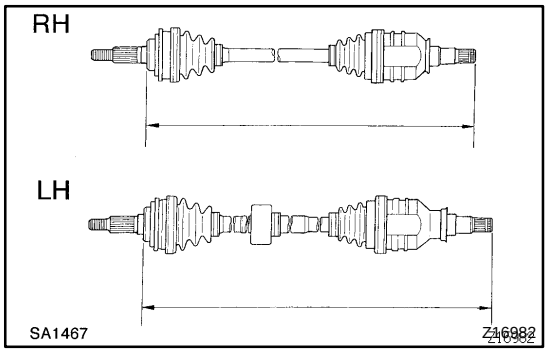

7. ASSEMBLY BOOT CLAMPS TO BOTH BOOTS

(a) Make sure the 2 boots are on the shaft groove.
(b) Make sure the drive shaft length to the standard.

Drive shaft standard length

RH	877.2 ± 5.0 mm (34.535 ± 0.197 in.)
LH	559.2 ± 5.0 mm (22.016 ± 0.197 in.)

(c) Place 4 new boot clamps to the 2 boots.
(d) Using a screwdriver, bend the band and lock it.

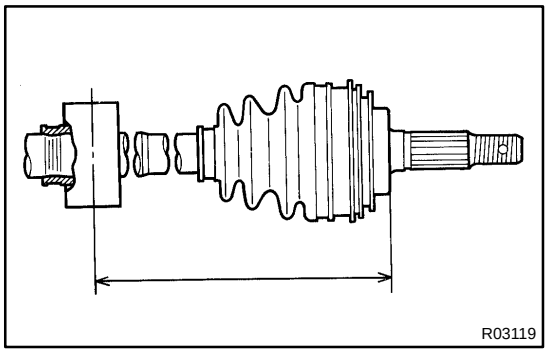

8. RH DRIVE SHAFT:
ASSEMBLY DAMPER CLAMP

(a) Make sure the damper is on the shaft groove.
(b) Set the distance, as shown.

Distance: 392.5 mm ± 5.0 mm (15.453 ± 0.197 in.)

(c) Place a new damper clamp to the damper.
(d) Using a screwdriver, bend the band and lock.

SF0WA-03

REASSEMBLY

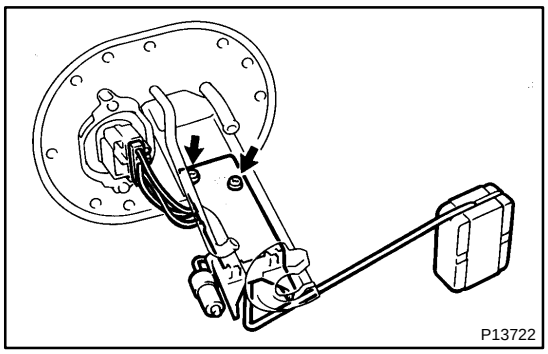

1. INSTALL CONNECTOR

Install a new gasket, the connector and connector support with the 2 screws.

2. INSTALL FUEL SENDER GAUGE TO FUEL PUMP BRACKET

(a) Install the sender gauge with the 2 screws.

(b) Connect the connector to the fuel pump bracket.

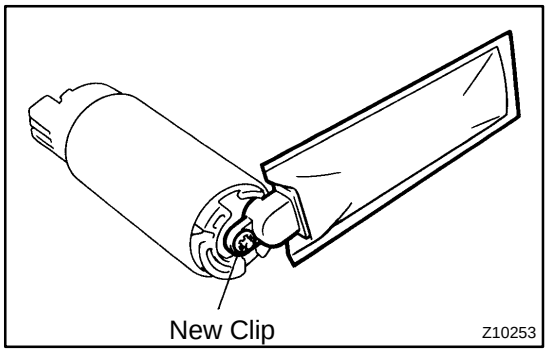

3. INSTALL FUEL PUMP FILTER TO FUEL PUMP

Install the pump filter with a new clip.

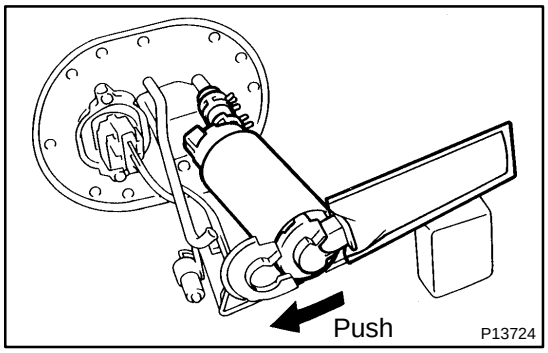

4. INSTALL FUEL PUMP TO FUEL PUMP BRACKET

(a) Connect the fuel hose to the outlet port of the fuel pump.

(b) Install the rubber cushion to the fuel pump.

(c) Install the fuel pump by pushing the lower side of the fuel pump.

(d) Install the lead wire.

CH0E8-02

REASSEMBLY

1. PLACE RECTIFIER END FRAME ON PULLEY

2. INSTALL ROTOR TO DRIVE END FRAME

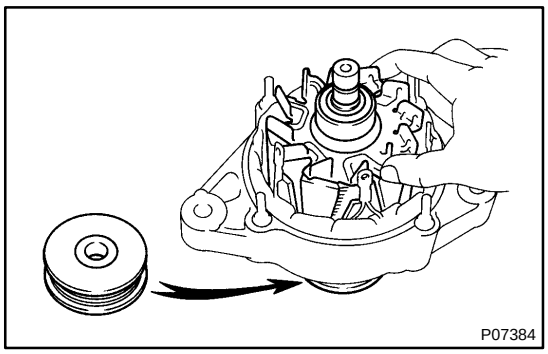

3. INSTALL RECTIFIER END FRAME

(a) M/T:

Install the generator washer to the rectifier end frame.

NOTICE:

Be careful of the generator washer installation direction.

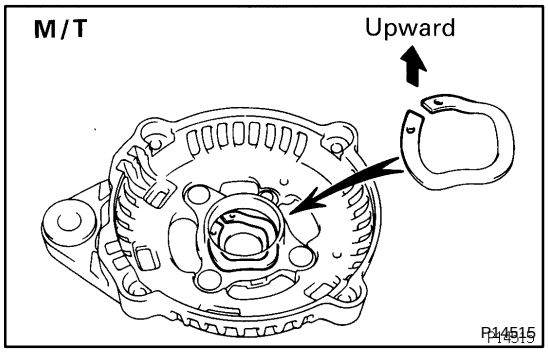

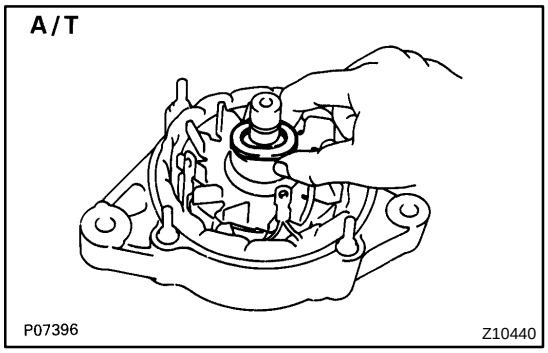

(b) A/T:

Place the generator washer on the rotor.

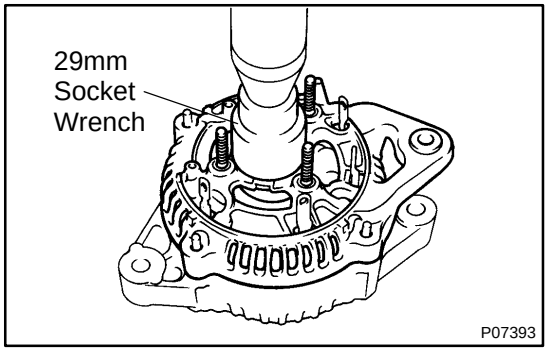

(c) Using a 29 mm socket wrench and press, slowly press in the rectifier end frame.

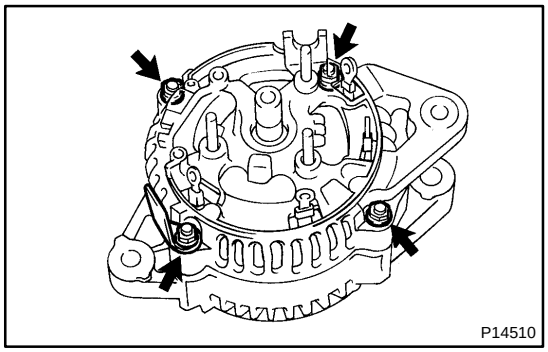

(d) Install the wire clip and 4 nuts.

Torque: 4.5 N·m (46 kgf·cm, 40 in.·lbf)

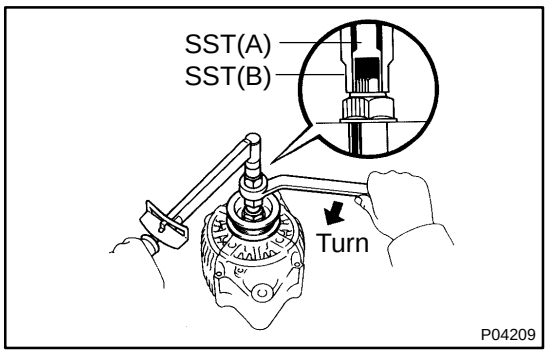

4. INSTALL PULLEY

(a) Install the pulley to the rotor shaft by tightening the pulley nut by hand.

(b) Hold SST (A) with a torque wrench, and tighten SST (B) clockwise to the specified torque.
SST 09820-63010
Torque: 39 N·m (400 kgf·cm, 29 ft·lbf)

(c) Check that SST (A) is secured to the pulley shaft.

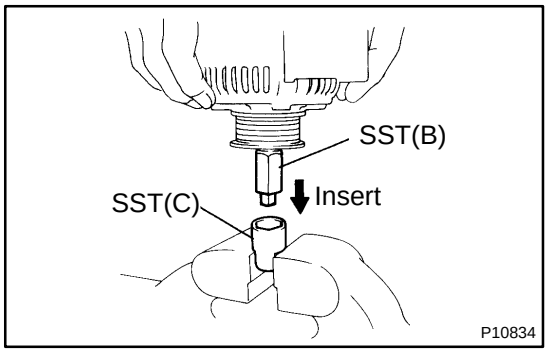

(d) Mount SST (C) in a vise.

(e) Insert SST (B) into SST (C), and attach the pulley nut to SST (C).

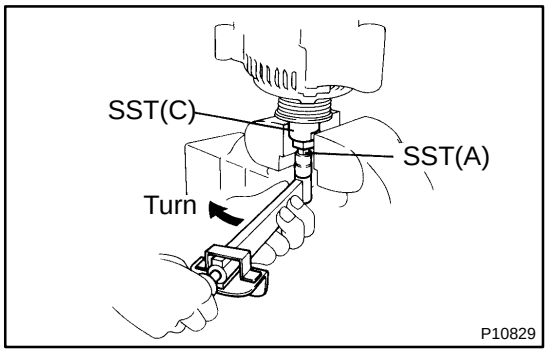

(f) To torque the pulley nut turn SST (A) in the direction shown in the illustration.
Torque: 110 N·m (1,125 kgf·cm, 81 ft·lbf)

(g) Remove the generator from SST (C).

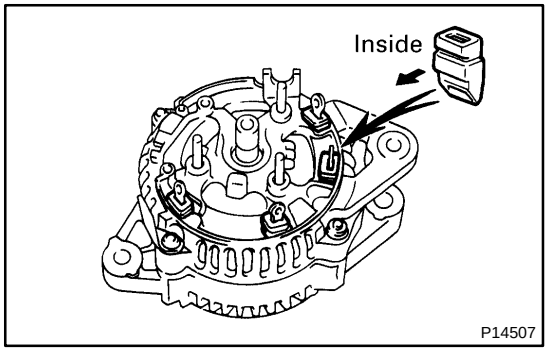

5. INSTALL RECTIFIER HOLDER

(a) Install the 4 rubber insulators on the lead wires.

NOTICE:

Be careful of the rubber insulators installation direction.

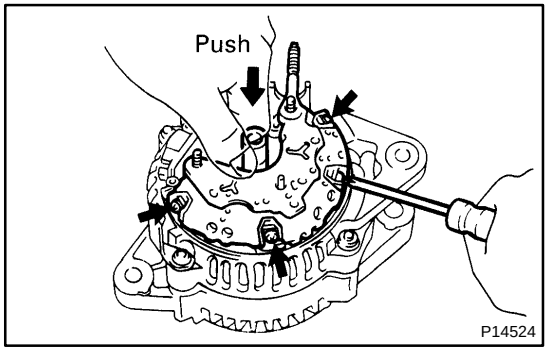

(b) Install the rectifier holder while pushing it with the 4 screws.
Torque:
M/T: 2.0 N·m (20 kgf·cm, 17 in.·lbf)
A/T: 2.9 N·m (30 kgf·cm, 25 in.·lbf)

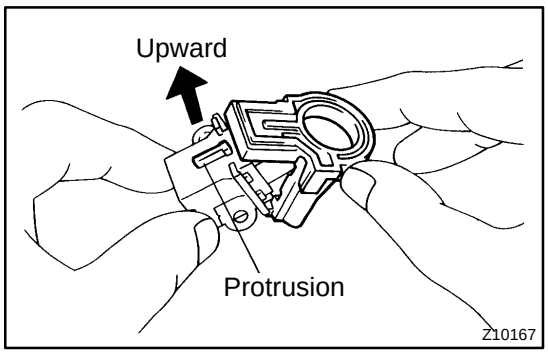

6. M/T:
INSTALL VOLTAGE REGULATOR AND BRUSH HOLDER

(a) Install the brush holder cover to the brush holder.

NOTICE:
Be careful of the holder installation direction.

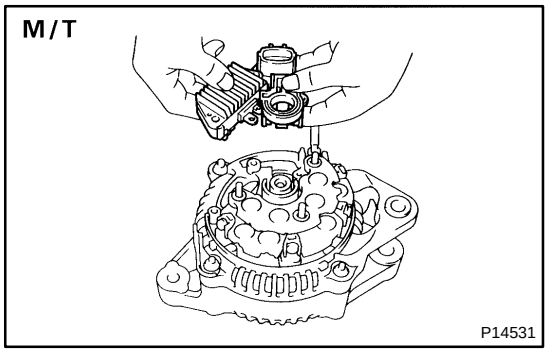

(b) Place the voltage regulator together with the brush holder horizontally on the rectifier end frame.

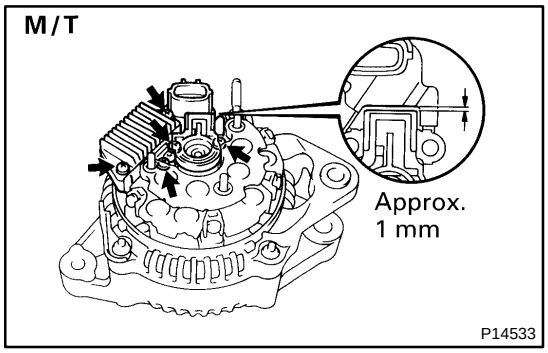

(c) Install the 5 screws until there is a clearance of approx. 1 mm (0.04 in.) between the brush holder and voltage regulator.
Torque: 2.0 N·m (20 kgf·cm, 17 in.·lbf)

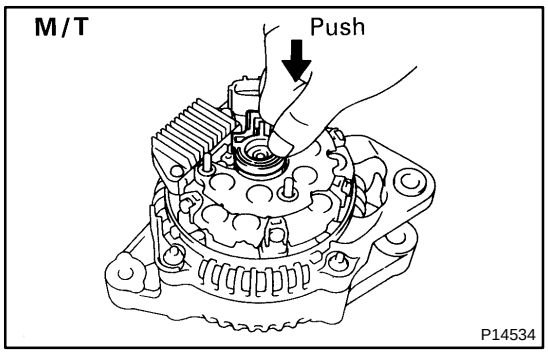

(d) Fit the brush holder cover.

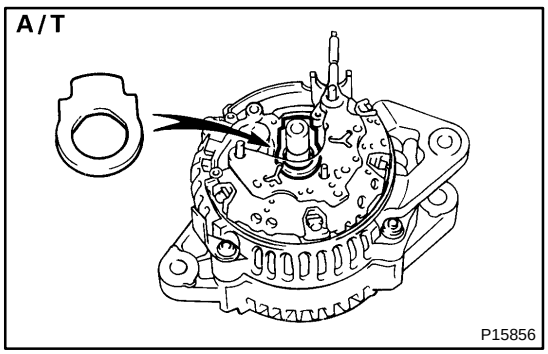

7. A/T:
INSTALL VOLTAGE REGULATOR AND BRUSH HOLDER

(a) Place the seal plate on the rectifier end frame.

(b) Place the voltage regulator and brush holder on the rectifier end frame.

NOTICE:
Be careful of the holder installation direction.

(c) Install the 5 screws.
Torque: 2.0 N·m (20 kgf·cm, 17 in.·lbf)

(d) Place the brush holder cover on the brush holder.

8. INSTALL REAR END COVER

(a) M/T:
Install the end cover with the 3 nuts.
Torque: 4.4 N·m (45 kgf·cm, 39 in.·lbf)

(b) A/T:
Install the end cover and plate terminal with the bolt and 3 nuts.
Torque:
Nut: 4.4 N·m (45 kgf·cm, 39 in.·lbf)
Bolt: 3.9 N·m (40 kgf·cm, 35 in.·lbf)

(c) Install the terminal insulator with the nut.
Torque: 4.1 N·m (42 kgf·cm, 36 in.·lbf)

(d) Install the wire clamp.

9. CHECK THAT ROTOR ROTATES SMOOTHLY

LU0JR-01

REASSEMBLY

Reassembly is in the reverse order of disassembly (See page LU-10).

SR16Z-02

REASSEMBLY

NOTICE:

When using a vise, do not overtighten it.

1. COAT WITH POWER STEERING FLUID (See page SR-36)

2. INSTALL SHORTER STRAIGHT PIN

Install a new pin to the side front plate.

3. INSTALL SIDE FRONT PLATE

(a) Coat 2 new O-rings with power steering fluid and install them to the plate.

(b) Install the plate to the vane pump shaft.

4. INSTALL VANE PUMP ROTOR

(a) Install the rotor to the vane pump shaft with the inscribed mark facing outward.

(b) Install a new snap ring to the vane pump shaft.

5. INSTALL LONGER STRAIGHT PIN

Install a new pin to the front housing.

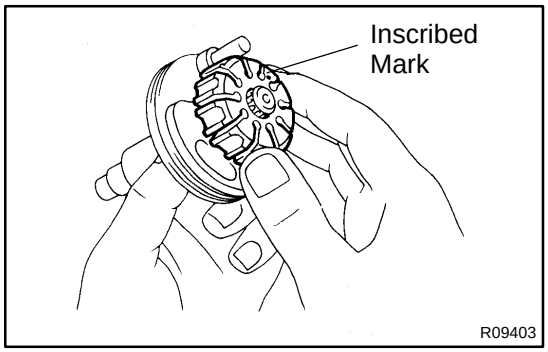

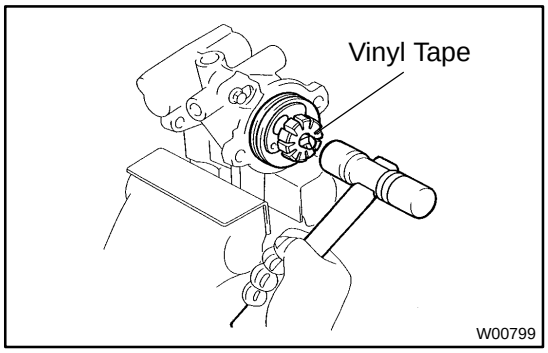

6. INSTALL VANE PUMP SHAFT WITH VANE PUMP ROTOR AND SIDE FRONT PLATE

(a) To prevent oil seal lip damage, wind vinyl tape on the shaft.

(b) Align the hole of the plate and longer straight pin, and tap in the shaft with a plastic hammer.

NOTICE:

Be careful not to damage the oil seal and O-rings.

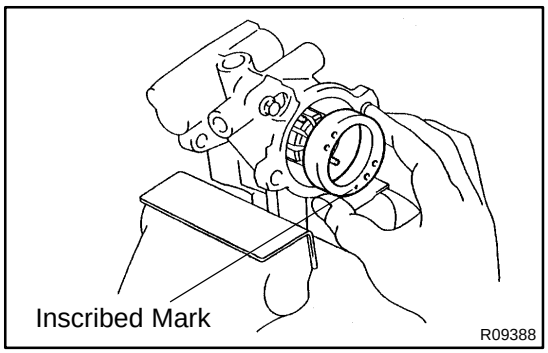

7. INSTALL CAM RING

Align the holes of the ring and 2 straight pins, and install the ring with the inscribed mark facing outward.

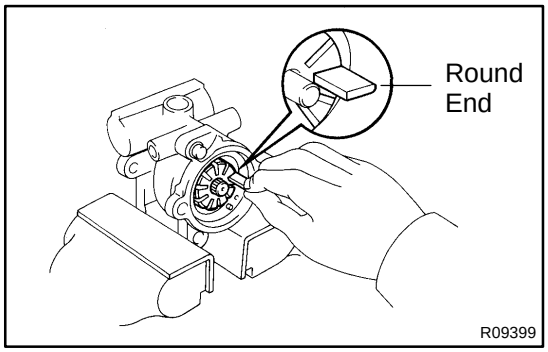

8. INSTALL VANE PLATES

Install the 10 plates with the round end facing outward.

9. INSTALL SIDE REAR PLATE

(a) Coat a new O-ring with power steering fluid and install it to the plate.

(b) Align the holes of the plate and 2 straight pins.

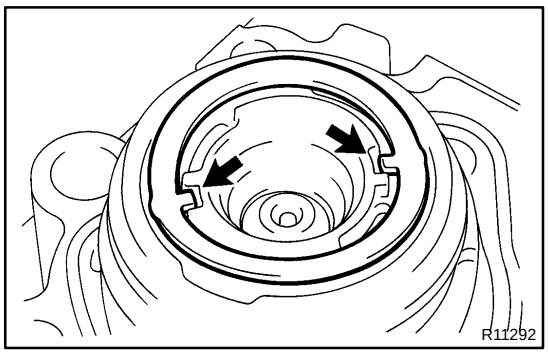

10. INSTALL WAVE WASHER

Install the washer so that its protrusions fit into the slots in the side rear plate.

11. INSTALL REAR HOUSING

(a) Coat a new O-ring with power steering fluid and install it to the housing.

(b) Install a new snap ring to the front housing.

12. INSTALL SPRING AND FLOW CONTROL VALVE

Install the valve facing the correct direction (See page SR-33).

13. INSTALL PRESSURE PORT UNION

(a) Coat a new O-ring with power steering fluid and install it to the union.

(b) Torque the union.

Torque: 69 N·m (700 kgf·cm, 51 ft·lbf)

14. INSTALL OIL RESERVOIR AND BRACKET

(a) Coat a new O-ring with power steering fluid and install it to the reservoir.

(b) Torque the 4 bolts.

Torque:
12 mm head bolt
13 N·m (130 kgf·cm, 9 ft·lbf)
14 mm head bolt
41 N·m (420 kgf·cm, 30 ft·lbf)

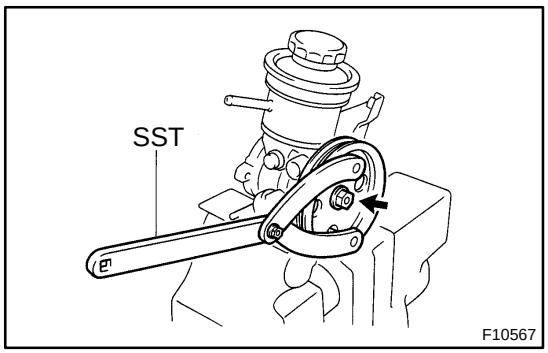

15. INSTALL AIR CONTROL VALVE

(a) Install a new union seat.

(b) Torque the valve.

Torque: 36 N·m (370 kgf·cm, 27 ft·lbf)

16. INSTALL VANE PUMP PULLEY

(a) Install the woodruff key to the vane pump shaft.

(b) Using SST to stop the pulley rotating, torque the nut.

SST 09960-10010 (09962-01000, 09963-01000)

Torque: 43 N·m (440 kgf·cm, 32 ft·lbf)

17. MEASURE PS VANE PUMP ROTATING TORQUE (See page SR-36)

CO0ZI-02

REASSEMBLY

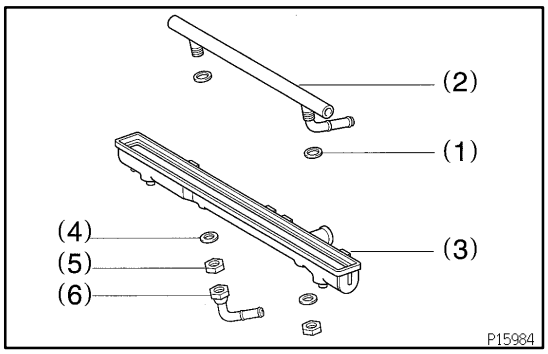

1. A/T:

INSTALL OIL COOLER TO LOWER TANK

(a) Clean the O-ring contact surface of the lower tank and oil cooler.

(b) Install new O-rings (1) to the oil cooler (2).

(c) Install the oil cooler with the O-rings to the lower tank (3).

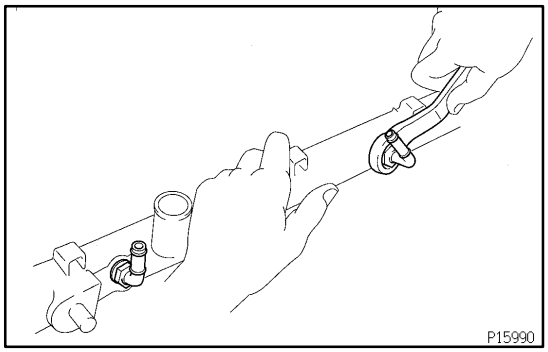

(d) Install the plate washers (4), and nuts (5). Torque the nuts.

Torque: 8.3 N·m (85 kgf·cm, 74 ft·lbf)

(e) Install the pipe (6).

Torque: 14.7 N·m (150 kgf·cm, 11 ft·lbf)

HINT:

Face the pipe in the same direction as before disassembly.

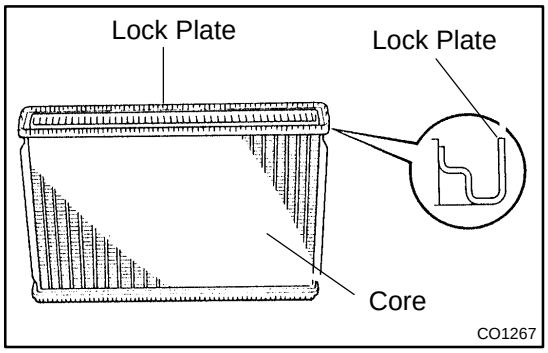

2. INSPECT LOCK PLATE

Inspect the lock plate for damage.

HINT:

- If the sides of the lock plate groove are deformed, reassembly of the tank will be impossible.
- Therefore, first correct any deformation with pliers or similar object. Water leakage will result if the bottom of the lock plate groove is damaged or dented.

NOTICE:

The radiator can only be recaulked 2 times.

After the 2nd time, the radiator core must be replaced.

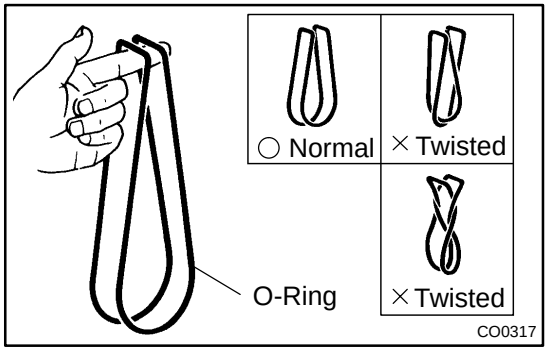

3. INSTALL NEW O-RINGS AND TANKS

(a) After checking that there are no foreign objects in the lock plate groove, install the new O-ring without twisting it.

HINT:

When cleaning the lock plate groove, lightly rub it with sand paper without scratching it.

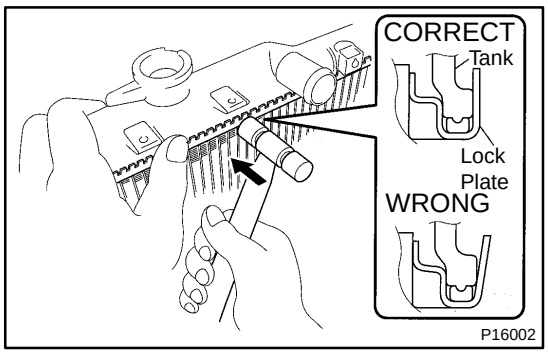

(b) Install the tank without damaging the O-ring.
(c) Tap the lock plate with a soft-faced hammer so that there is no gap between it and the tank.

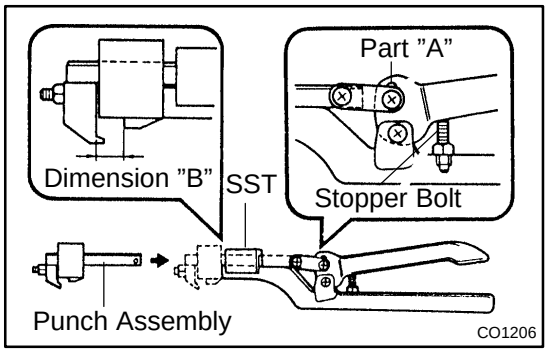

4. ASSEMBLY OF SST

SST 09230-01010, 09231 - 14010

(a) Install the punch assembly to the overhaul handle, inserting it in the hole in part "A" as shown in the illustration.
(b) While gripping the handle, adjust the stopper bolt so that dimension "B" shown in the diagram.
Dimension "B": 8.4 mm (0.34 in)

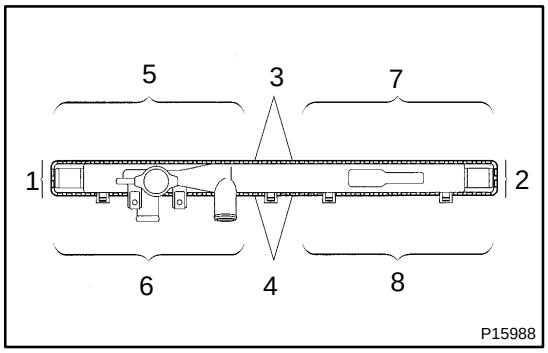

5. CAULK LOCK PLATE

(a) Lightly press SST against the lock plate in the order shown in the illustration. After repeating this a few times, fully caulk the lock plate by squeezing the handle until stopped by the stopper plate.
SST 09230-01010

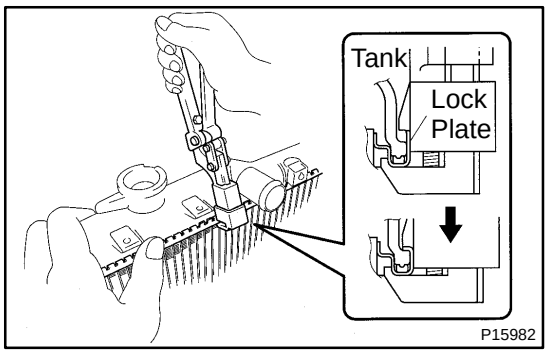

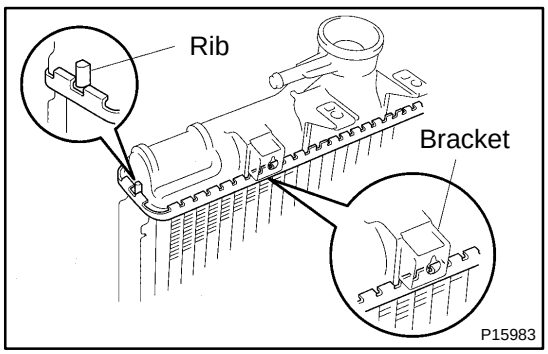

HINT:

- Do not stake the areas protruding around the pipes, brackets or tank ribs.

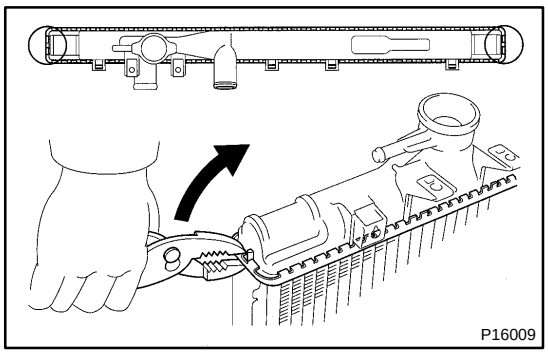

- The points shown in the illustration and oil cooler near here (A/T) cannot be staked with the SST. Use a plier or similar object and be careful not to damage the core plates.

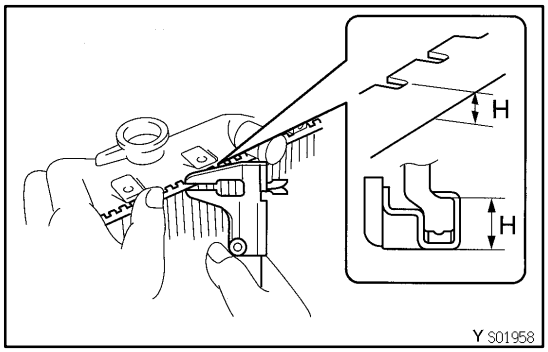

(b) Check the lock plate height (H) after completing the caulking.

Plate height: 7.60 mm (0.299 in)

If not within the specified height, adjust the stopper bolt of the handle again and perform the caulking again.

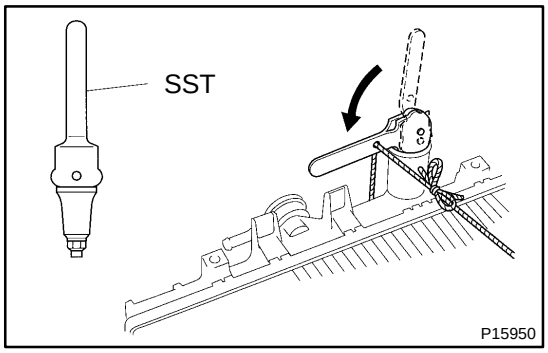

6. INSPECT FOR WATER LEAKS

(a) Tighten the drain cock.

(b) Plug the inlet and outlet pipes of the radiator with SST.
SST 09230-01010

(c) Using a radiator cap tester, apply pressure to the radiator.
Pressure:
177 kPa (1.8 kgf/cm^2, 26 psi)

(d) Inspect for water leaks.

HINT:

On radiators with resin tanks, there is a clearance between the tank and lock plate where a minute amount of air will remain, giving the appearance of an air leak when the radiator is submerged in water. Therefore, before doing the water leak test, first swish the radiator around in the water until all air bubbles disappear.

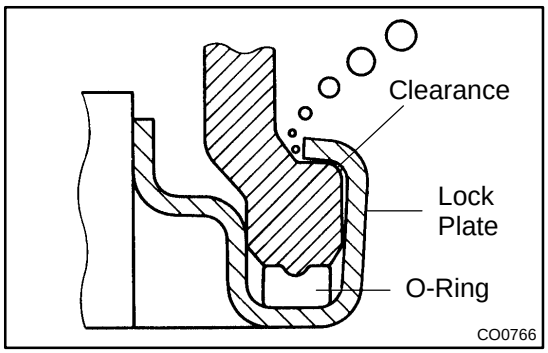

ST0K0-01

REASSEMBLY

Reassembly is in the reverse order of disassembly (See page ST-5).

HINT:

Use high-temperature grease to lubricate the bearings, springs, steel ball and gears when assembling the starter.

BO1DR-03

REASSEMBLY

1. INSTALL DOOR LOCK CYLINDER

(a) Install the door lock cylinder through the service hole.

(b) Install the door lock cylinder with the 2 bolts.

2. INSTALL DOOR LOCK

(a) Install the door lock through the service hole.

(b) Install the door lock with the 2 bolts.

Torque: 19 N·m (195 kgf·cm, 14 ft·lbf)

(c) Connect the connector.

(d) Connect the link to the door lock cylinder.

3. INSTALL WIPER MOTOR

(a) Install the wiper motor with the 3 bolts.

Torque: 5.4 N·m (55 kgf·cm, 48 in.·lbf)

(b) Connect the connector.

4. INSTALL HIGH-MOUNTED STOP LIGHT

Install the high-mounted stop light with the 2 nuts.

5. INSTALL BACK DOOR REINFORCEMENT PLATE NO.2

Install the back door reinforcement plate No.2 with the 4 bolts.

6. INSTALL THESE PARTS:

(a) Wiper arm

Torque: 5.4 N·m (55 kgf·cm, 48 in.·lbf)

(b) Deck trim rear cover

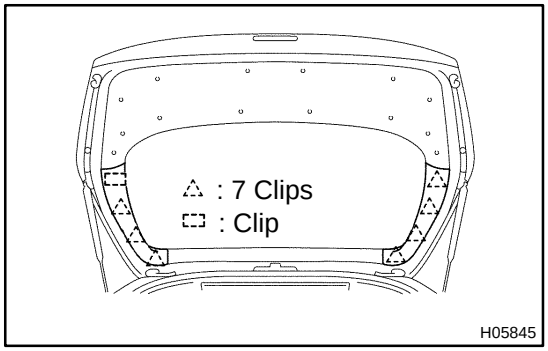

(c) Back door trim covers

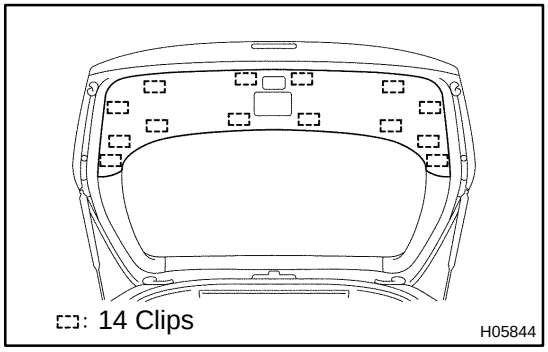

(d) Back door trim board

MX0BX-02

REASSEMBLY

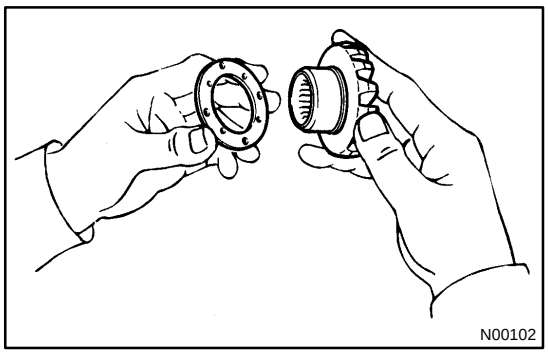
N00102

1. ASSEMBLE DIFFERENTIAL CASE

(a) Install the correct thrust washers and side gears.
Refer to the table below, select thrust washers which will ensure that the backlash is within the specification.
Standard backlash: 0.05-0.20 mm (0.0020-0.0079 in.)

Thickness mm (in.)	Thickness mm (in.)
0.95 (0.0374)	1.10 (0.0433)
1.00 (0.0394)	1.15 (0.0453)
1.05 (0.0413)	1.20 (0.0472)

(b) Install the thrust washers and side gears in the differential case.

(c) Install the pinion shaft.

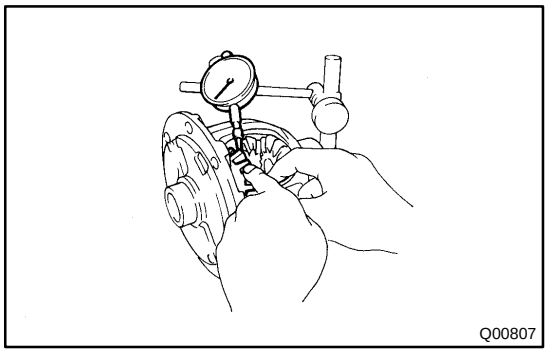
Q00807

(d) Using a dial indicator, check the side gear backlash.
Measure the side gear backlash while holding one pinion gear toward the case.
Standard backlash: 0.05-0.20 mm (0.0020-0.0079 in.)

If the backlash is not within the specification, install a thrust washer of different thickness.

(e) Using a pin punch and hammer, drive in the straight pin through the case and hole in the pinion shaft.

(f) Stake the differential case.

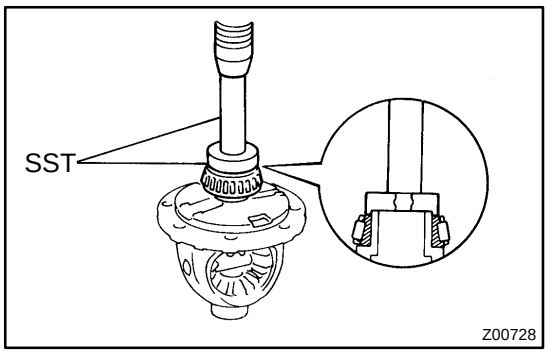

Z00728

2. Ring Gear Side: INSTALL SIDE BEARING

Using SST and a press, install a new side bearing.
SST 09550-10012 (09252-10010, 09556-10010)

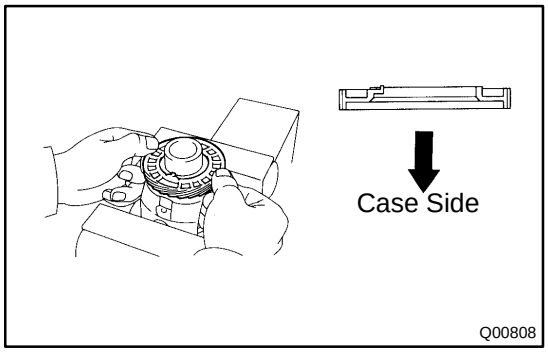

Q00808

3. Vehicle Speed Sensor Drvie Gear Side: INSTALL SIDE BEARING

(a) Install the vehicle speed sensor drive gear.

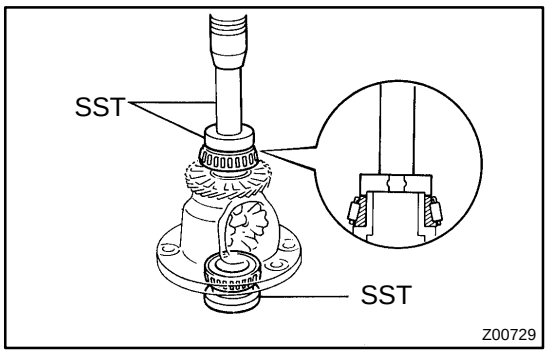

(b) Using SST and a press, install a new side bearing.
SST 09950-10012 (09556-10010),
09950-60010 (09951-00460),
09950-70010 (09951-07150)

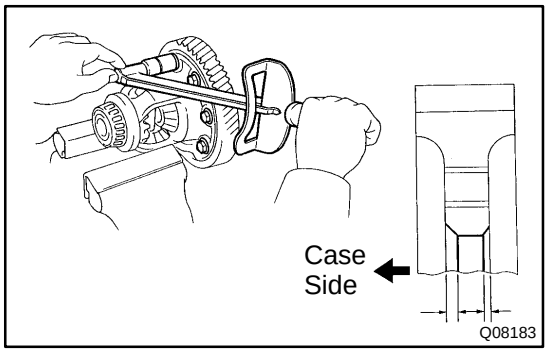

4. INSTALL RING GEAR ON DIFFERENTIAL CASE

(a) Clean the contact surface of the differential case.
(b) Heat the ring gear in boiling water.
(c) Carefully remove the ring gear from the water.
(d) After the moisture on the ring gear has completely evaporated, quickly install the ring gear to the differential case.

HINT:
Align the matchmarks on the differential case and contact the ring gear.

(e) Temporary install the 8 set bolts.

NOTICE:
The ring gear set bolts should not be tightened until the ring gear has cooled sufficiently.

(f) After the ring gear has cooled sufficiently, torque the ring gear set bolts uniformly and a little at a time.
Torque: 83 N·m (850 kgf·cm, 61 ft·lbf)

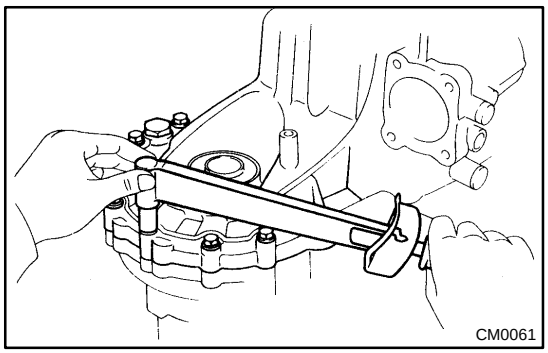

5. INSPECT DIFFERENTIAL SIDE BEARING PRELOAD

(a) Install the differential case assembly to the transaxle case.
(b) Install the transmission case.
(c) Install and torque the case bolts.
Torque: 29 N·m (300 kgf·cm, 22 ft·lbf)

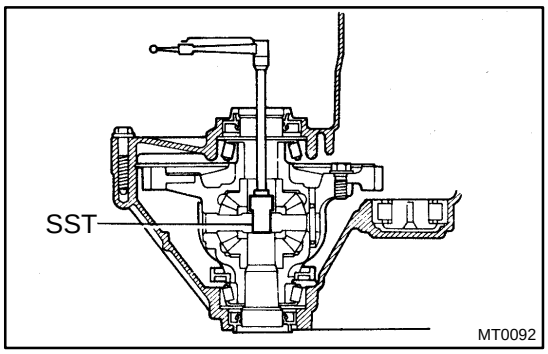

(d) Using SST and a torque wrench, measure the preload.
SST 09564-3201 1
Preload (at starting):
New bearing
0.8-1.6 N·m (8-16 kgf·cm, 6.9-13.9 in.·lbf)
Reused bearing
0.5-1.0 N·m (5-10 kgf·cm, 4.3-8.7 in.·lbf)

If the preload is not within the specification, remove the transmission case side outer race of the side bearing with SST. (See page MX-37)
Select another shim.
HINT:
The preload will change by about 0.3-0.4 N·m
(3-4 kgf·cm, 2.6-3.5 in.·lbf) with each 0.05 mm change in shim thickness.

Mark	Thickness mm (in.)	Mark	Thickness mm (in.)
A	2.10 (0.0827)	L	2.60 (0.1024)
B	2.15 (0.0846)	M	2.65 (0.1043)
C	2.20 (0.0866)	N	2.70 (0.1063)
D	2.25 (0.0886)	P	2.75 (0.1083)
E	2.30 (0.0906)	Q	2.80 (0.1102)
F	2.35 (0.0925)	R	2.85 (0.1122)
G	2.40 (0.0945)	S	2.90 (0.1142)
H	2.45 (0.0965)	T	2.95 (0.1161)
J	2.50 (0.0984)	U	3.00 (0.1181)
K	2.55 (0.1004)	-	-

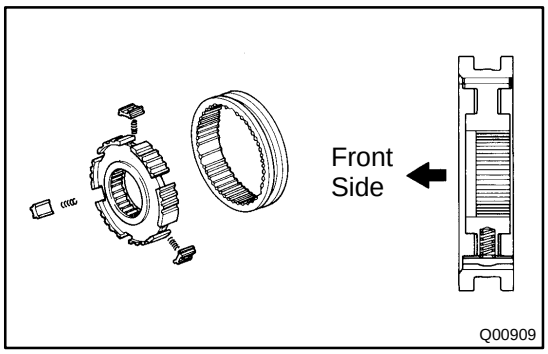

REASSEMBLY

HINT:

Coat all of the sliding and rotating surfaces with gear oil before assembly.

1. INSTALL NO.2 CLUTCH HUB INTO NO.2 HUB SLEEVE

(a) Install the 3 springs and shifting keys to the No.2 clutch hub.

(b) Install the No.2 hub sleeve to the No.2 clutch hub.

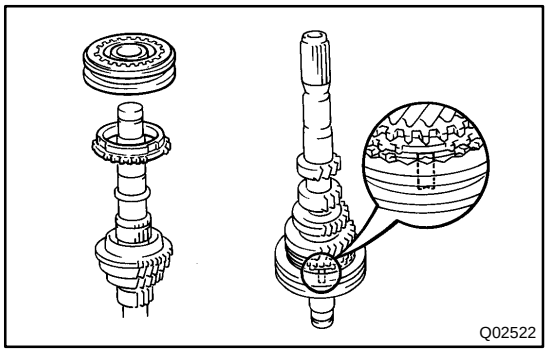

2. INSTALL 3RD GEAR, NEEDLE ROLLER BEARING, SYNCHRONIZER RING AND NO.2 HUB SLEEVE ASSEMBLY TO INPUT SHAFT

(a) Apply gear oil to the needle roller bearings.

(b) Place the synchronizer ring on the gear and align the ring slots with the shifting keys.

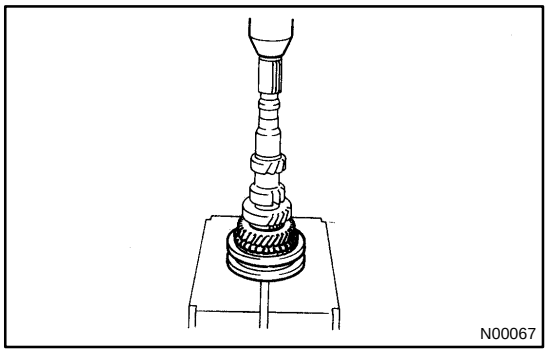

(c) Using a press, install the 3rd gear and No.2 hub sleeve assembly.

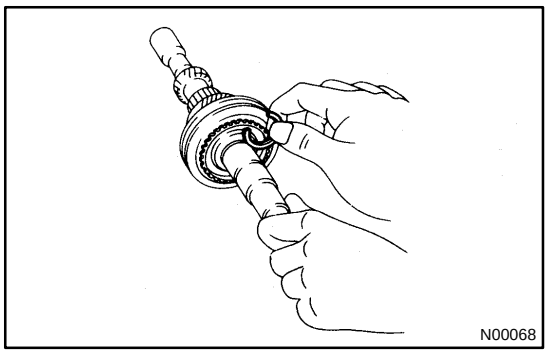

3. INSTALL SNAP RING

(a) Select a snap ring that will allow minimum axial play.

Mark	Thickness mm (in.)	Mark	Thickness mm (in.)
0	2.30 (0.0906)	3	2.48 (0.0976)
1	2.36 (0.0929)	4	2.54 (0.1000)
2	2.42 (0.0953)	5	2.60 (0.1024)

(b) Using a screwdriver and hammer, tap in the snap ring.

4. INSPECT 3RD GEAR THRUST CLEARANCE
(See page MX-24)

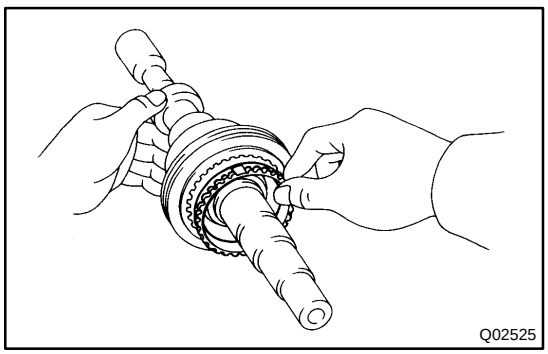

5. INSTALL SYNCHRONIZER RING, NEEDLE ROLLER BEARING, SPACER, 4TH GEAR AND REAR BALL BEARING

(a) Apply gear oil to the needle roller bearings.

(b) Place the synchronizer ring on the gear and align the ring slots with the shifting keys.

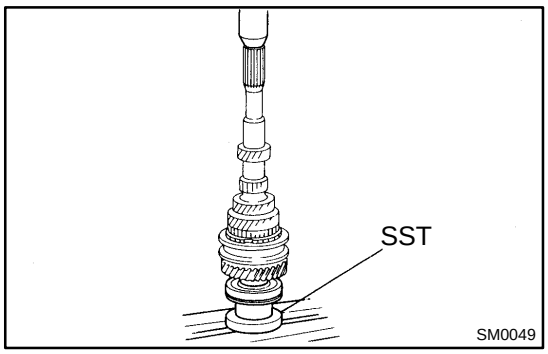

(c) Using SST and a press, install the rear ball bearing.
SST 09608-03071

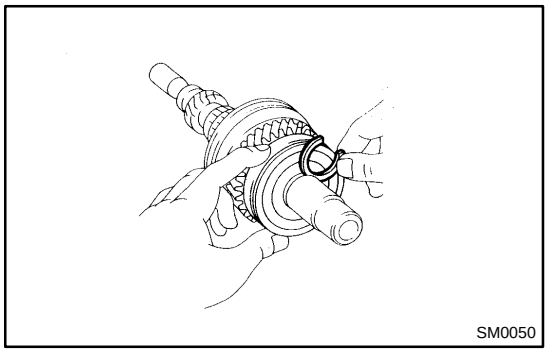

6. INSTALL SNAP RING

(a) Select a snap ring that will allow minimum axial play.

Mark	Thickness mm (in.)	Mark	Thickness mm (in.)
A	2.29 (0.0902)	D	2.47 (0.0972)
B	2.35 (0.0925)	E	2.53 (0.0996)
C	2.41 (0.0949)	F	2.59 (0.1020)

(b) Using a screwdriver and hammer, tap in the snap ring.

7. INSPECT 4TH GEAR THRUST CLEARANCE
(See page MX-24)

MX0BL-01

REASSEMBLY

Reassembly is in the reverse order of disassembly (See page MX-12).

HINT:

Coat all of the sliding and rotating surfaces with gear oil before assembly.

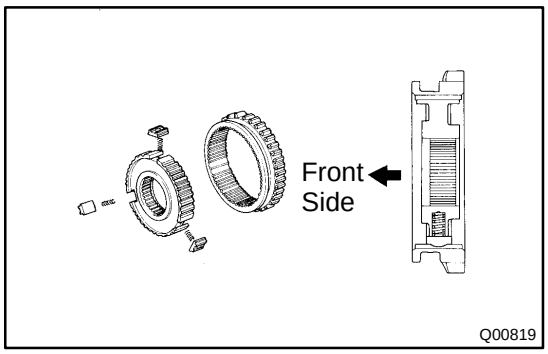

REASSEMBLY

HINT:

Coat all of the sliding and rotating surfaces with gear oil before assembly.

1. INSTALL NO.1 CLUTCH HUB INTO NO.1 HUB SLEEVE

(a) Install the 3 springs and shifting keys to the No.1 clutch hub.

(b) Install the No.1 clutch hub to the No.1 hub sleeve.

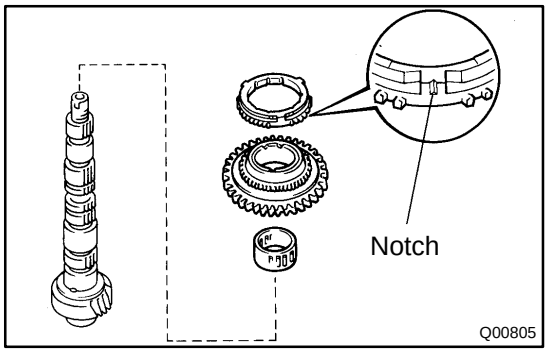

2. INSTALL BALL, THRUST WASHER, 1ST GEAR, NEEDLE ROLLER BEARING, SYNCHRONIZER RING AND NO.1 HUB SLEEVE ASSEMBLY TO OUTPUT SHAFT

(a) Install the ball to the shaft.

(b) Fit the thrust washer groove securely over the locking ball when installing the thrust on the shaft.

(c) Apply gear oil to the needle roller bearing.

(d) Install the needle roller bearing, 1st gear and synchronizer ring.

(e) Place the synchronizer ring on the gear and align the clutch hub grooves with the projections on the synchronizer ring.

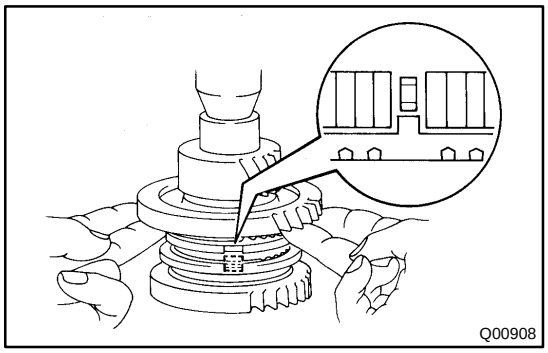

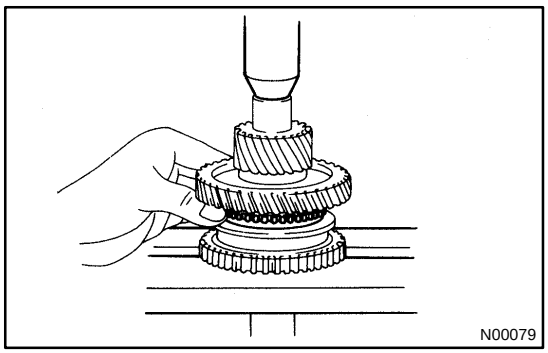

(f) Using a press, install the 1st gear and No.1 hub sleeve.

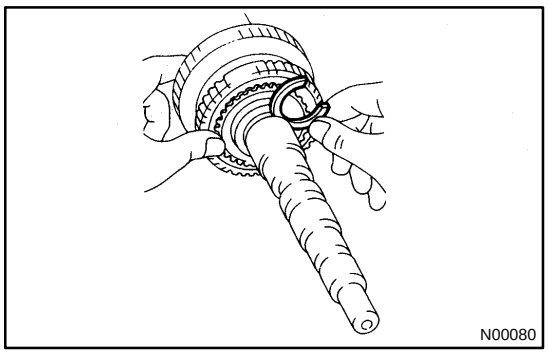
N00080

3. INSTALL SNAP RING

(a) Select a snap ring that will allow minimum axial play.

Mark	Thickness mm (in.)	Mark	Thickness mm (in.)
A	2.50 (0.0984)	D	2.68 (0.1055)
B	2.56 (0.1008)	E	2.74 (0.1079)
C	2.62 (0.1031)	F	2.80 (0.1102)

(b) Using a screwdriver and hammer, tap in the snap ring.

4. INSPECT 1ST GEAR THRUST CLEARANCE
(See page MX-31)

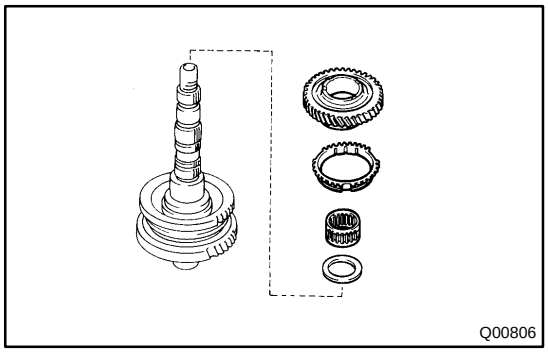
Q00806

5. INSTALL SYNCHRONIZER RING, SPACER, NEEDLE ROLLER BEARING, 2ND GEAR AND 3RD DRIVEN GEAR

(a) Place the synchronizer ring on the gear and align the clutch hub grooves with the projections on the synchronizer ring.
(b) Install the spacer.
(c) Apply gear oil to the needle roller bearing.
(d) Install the 2nd gear.

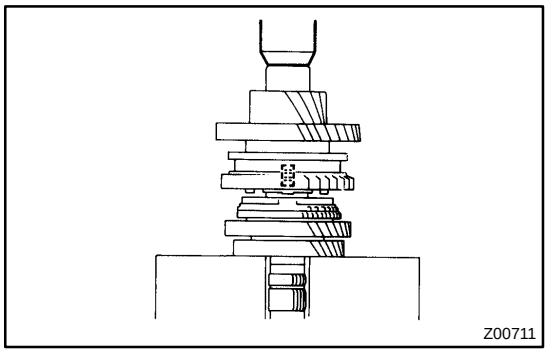
Z00711

(e) Using a press, install the 3rd driven gear.

6. INSPECT 2ND GEAR THRUST CLEARANCE
(See page MX-31)

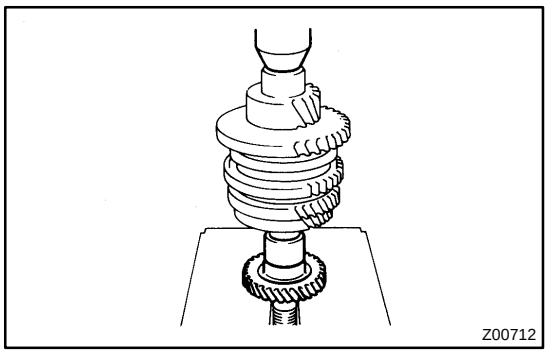
Z00712

7. INSTALL OUTPUT GEAR SPACER AND 4TH DRIVEN GEAR

(a) Install the output gear spacer.
(b) Using a press, install the 4th driven gear.

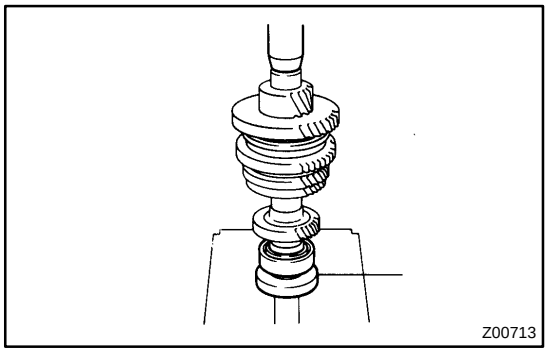
Z00713

8. INSTALL REAR BALL BEARING

Using SST and a press, install the rear ball bearing.
SST 09316-6001 1 (09316-00021)

CL06A-03

REASSEMBLY

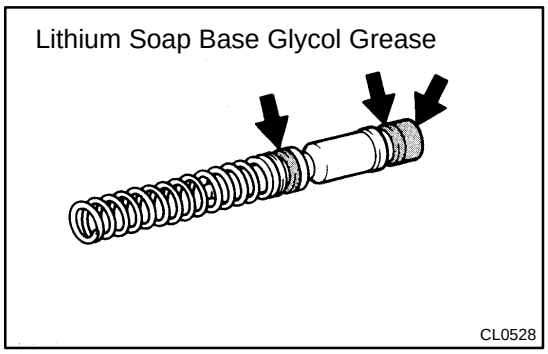

1. COAT PARTS WITH LITHIUM SOAP BASE GLYCOL GREASE, AS SHOWN

2. INSERT PISTON INTO CYLINDER

3. INSTALL PUSH ROD ASSEMBLY WITH WASHER AND SNAP RING

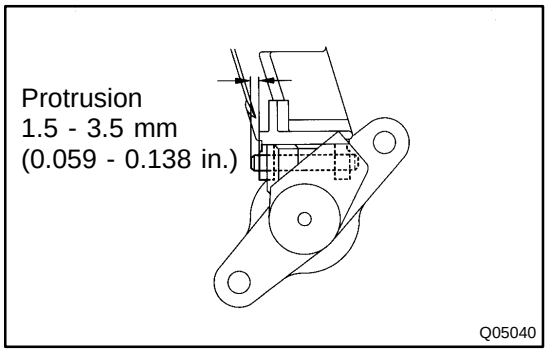

4. INSTALL RESERVOIR TANK

(a) Install the reservoir tank and a new grommet.

(b) Using a pin punch and hammer, drive in the slotted spring pin.

5. INSTALL CLEVIS

CL06F-03

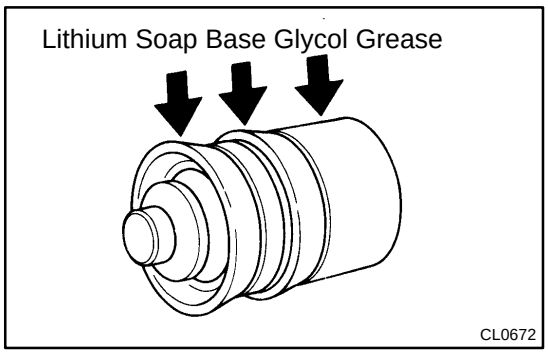

REASSEMBLY

1. **COAT PISTON WITH LITHIUM SOAP BASE GLYCOL GREASE, AS SHOWN**
2. **INSTALL PISTON WITH SPRING INTO CYLINDER**
3. **INSTALL BOOT WITH PUSH ROD TO CYLINDER**
4. **INSTALL BLEEDER PLUG**

BO49M-01

REASSEMBLY

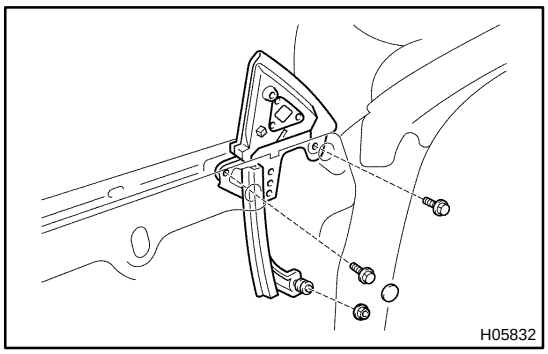

1. INSTALL MIRROR BRACKET

Install the mirror bracket with the 2 bolts and nut, then install the hole plug cover.

2. INSTALL DOOR LOCK CYLINDER

Install the door lock cylinder with the snap ring to the outside handle.

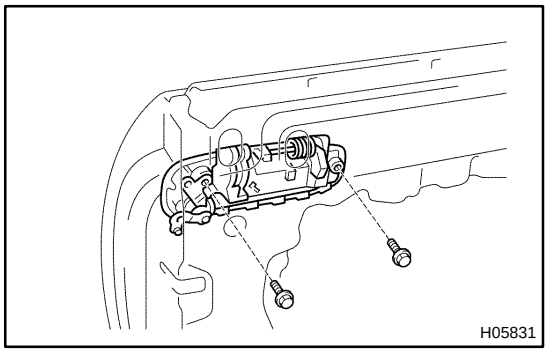

3. INSTALL OUTSIDE HANDLE

Install the outside handle with the 2 bolts.

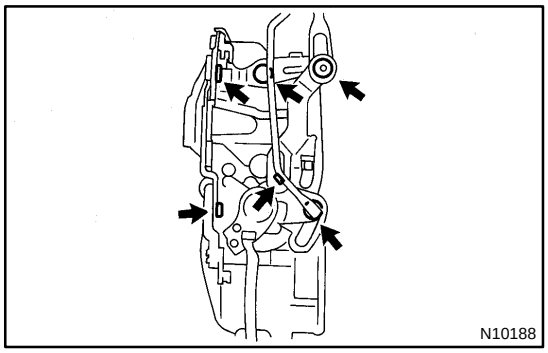

4. INSTALL DOOR LOCK

HINT:

Apply MP grease to the sliding and rotating parts of the door lock.

(a) Install the door lock through the service hole.

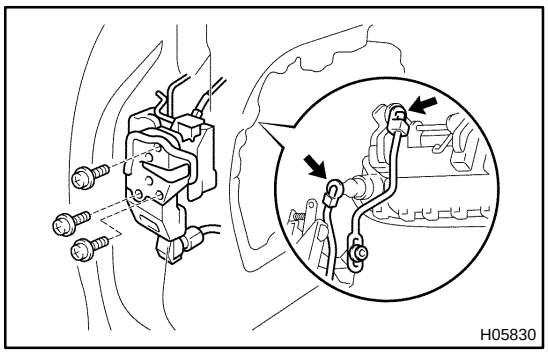

(b) Install the 3 screws.

Torque: 5.4 N·m (55 kgf·cm, 48 in.·lbf)

HINT:

Apply adhesive to the 3 screws.

Part No.08833-00070, THREE BOND 1324 or equivalent.

(c) Connect the 2 links to the outside handle.

(d) w/ Power Door Lock:
Connect the connector.

(e) Install the bellcrank.

(f) Connect the open link and locking link No.1 to the bellcrank.

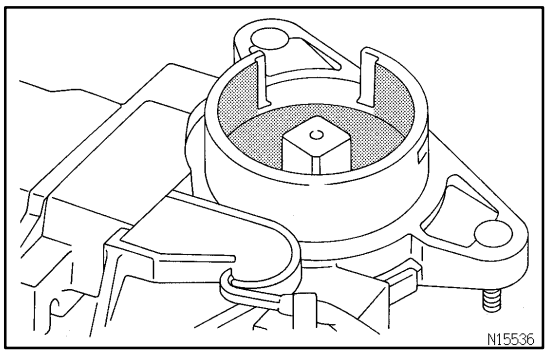

5. INSTALL WINDOW REGULATOR

NOTICE:

- **To prevent the drum and cable from coming off, do not tilt the drum, subject it to shocks or use force on it.**
- **If the cable comes off the drum, do not remind the cable and do not reuse it.**
- **After installing the window regulator, do not operate it by itself as some types of regulator do not have a stopper.**

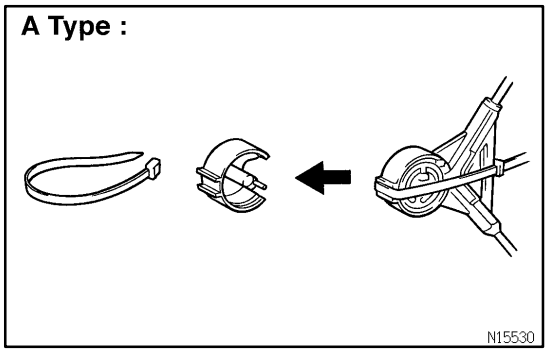

(a) Using Holding Tool A:
Install the window regulator drum into the motor housing.
(1) Apply MP grease inside the motor housing.

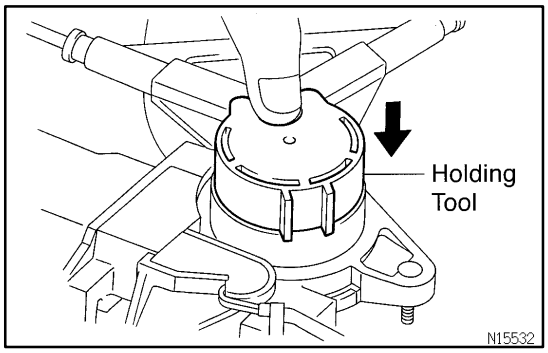

(2) With the holding tool installed, match the holding tool with the motor housing.
(3) Push down on the wire guide and drum, and insert the drum into the motor housing.

NOTICE:

If you can not insert the drum into the motor, slowly slide the bracket for installing the glass, and insert the drum while aligning the drive shaft of the motor with the drum.

(4) Apply MP grease to the side of the drum.

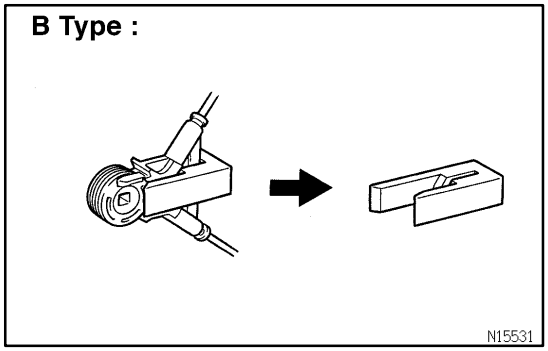

(b) Using Holding Tool B:
Install the window regulator drum into the motor housing.
(1) Apply MP grease inside the motor housing.

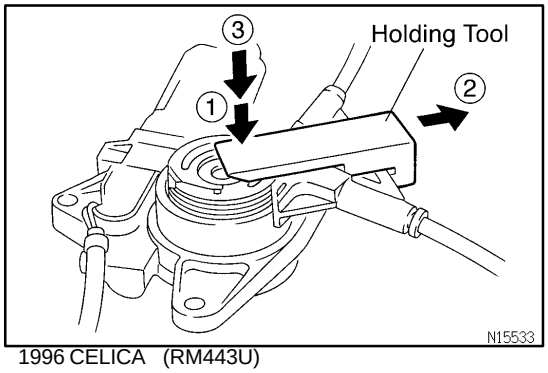

(2) With the holding tool installed, partially insert the drum into the motor housing.
(3) Remove the holding tool, and insert the drum into the motor housing.

NOTICE:

If you can not insert the drum into the motor, slowly slide the bracket for installing the glass, and insert the drum while aligning the drive shaft of the motor with the drum.

(4) Apply MP grease to the side of the drum.

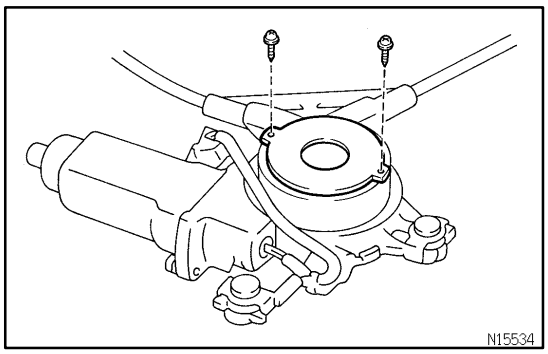

(c) Install the cover plate.
Install the cover plate using the 2 screws.

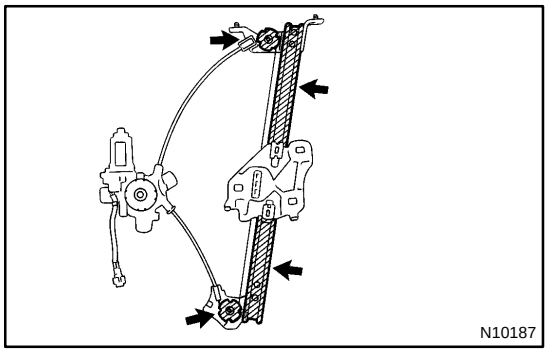

HINT:
Apply MP grease to the glass guide and rollers of window regulator.

(d) Install the window regulator through the service hole.

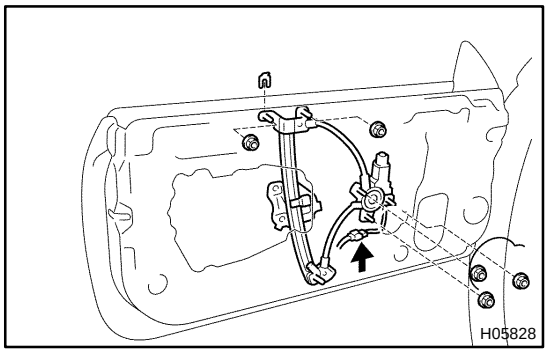

(e) Install the window regulator with the 5 nuts.
Torque: 5.4 N·m (55 kgf·cm, 48 in.·lbf)

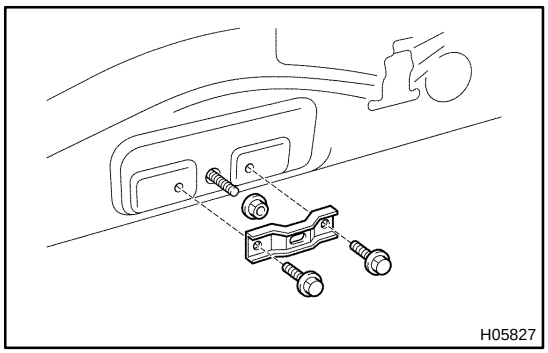

(f) Install the setting nut.
(g) Install the inside lower plate with the 2 bolts.
Torque: 7.8 N·m (80 kgf·cm, 69 in.·lbf)
(h) w/ Power Window:
Connect the connector.

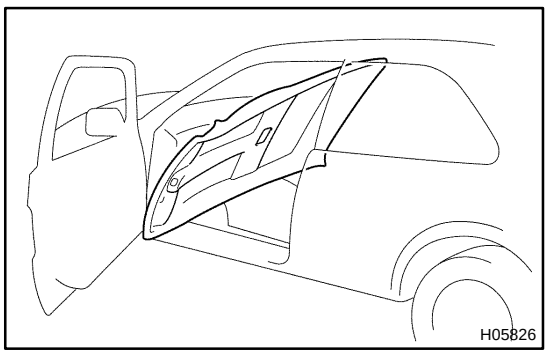

6. INSTALL DOOR GLASS

Install the door glass with the 3 nuts.
Torque: 7.4 N·m (75 kgf·cm, 65 in.·lbf)

NOTICE:
Be careful not to drop the door glass.

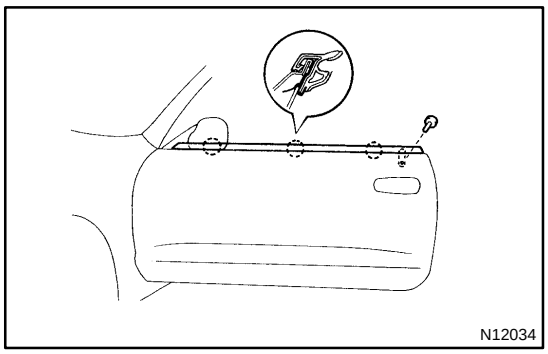

7. INSTALL DOOR BELT MOULDING

8. INSTALL DOOR WINDOW UPPER STOPS

Torque: 5.4 N·m (55 kgf·cm, 48 in.·lbf)

9. INSTALL WEATHER STRIP

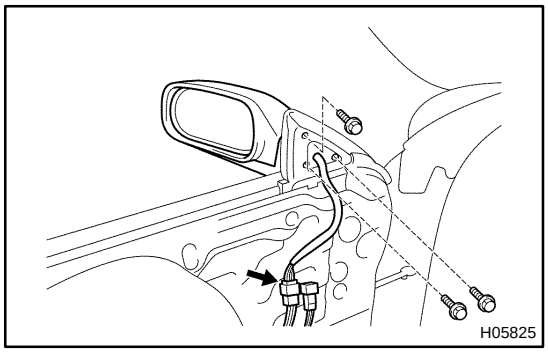

10. INSTALL OUTSIDE REAR VIEW MIRROR

Install the outside rear view mirror with the 3 bolts, then connect the connector.

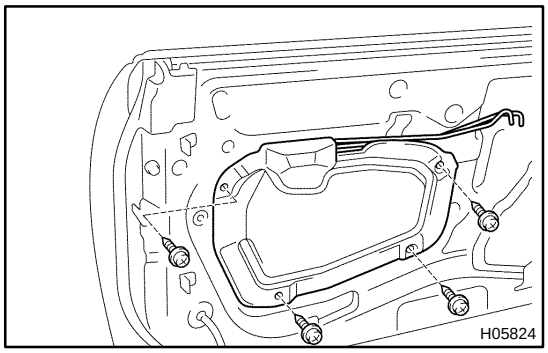

11. INSTALL INSIDE PANEL FRAME

Install the inside panel frame with the 4 screws.

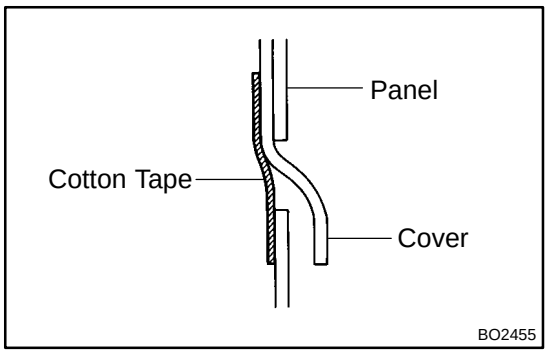

12. INSTALL SERVICE HOLE COVER

HINT:

Bring out the links through the service hole cover.

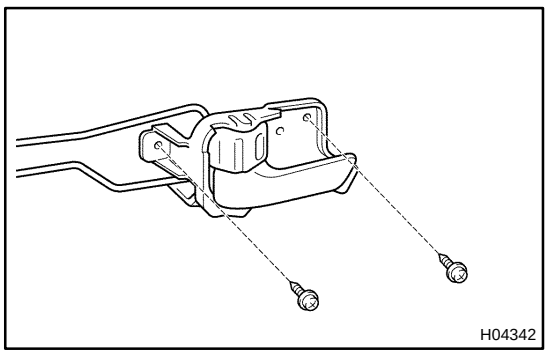

13. INSTALL INSIDE HANDLE

(a) Connect the 2 links to the inside handle.

(b) Install the inside handle with the 2 screws.

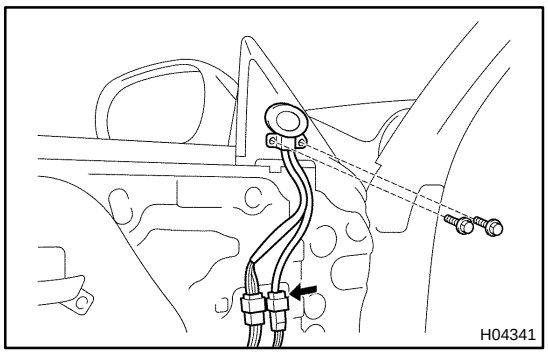

14. INSTALL TWEETER SPEAKER

(a) Install the tweeter speaker with the 2 bolts.
Torque: 7.8 N·m (80 kgf·cm, 69 in.·lbf)

(b) Connect the connector.

15. INSTALL FRONT LOWER SPEAKER

(a) Install the front lower speaker with the 4 screws.

(b) Connect the connector.

16. INSTALL FRONT UPPER SPEAKER

(a) Install the front upper speaker with the 2 screws.

(b) Connect the connector.

17. INSTALL DOOR TRIM

Install the door trim with the 8 screws and 3 clips, then install the 2 hole plug covers.

18. INSTALL COURTESY LIGHT

19. w/ Power Window
INSTALL POWER WINDOW SWITCH

20. INSTALL INSIDE HANDLE BEZEL

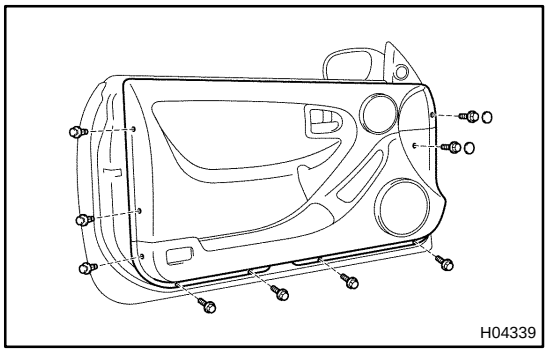

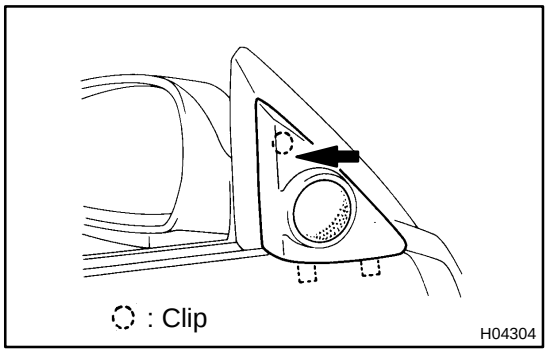

21. INSTALL TWEETER SPEAKER COVER

Install the tweeter speaker cover.

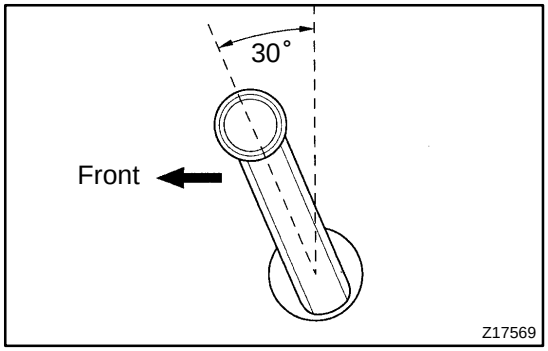

22. w/o Power Window:
INSTALL REGULATOR HANDLE

Install the regulator handle with the snap ring.

HINT:

With door window fully closed, install the plate and the regulator handle with the snap ring, as shown in the illustration.

SA12X-02

REASSEMBLY

1. INSTALL LOWER COIL SPRING INSULATOR ONTO SHOCK ABSORBER

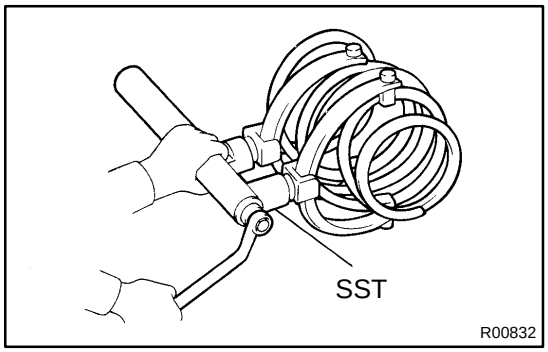

2. INSTALL COIL SPRING

(a) Using SST, compress the coil spring.
SST 09727-30020

NOTICE:

Do not use an impact wrench. It will damage the SST.

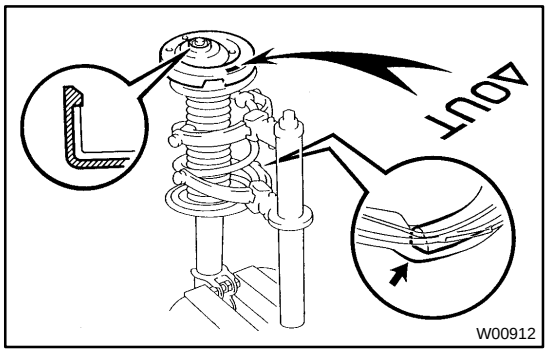

(b) Install the coil spring to the shock absorber.

HINT:

Fit the lower end of the coil spring into the gap of the lower spring seat.

3. INSTALL SPRING BUMPER AND DUST COVER

(a) Install the spring bumper to piston rod.
(b) Position the upper coil spring insulator to the upper spring seat.
(c) Position the dust cover to the upper spring seat.
(d) Install the upper spring seat with the dust cover to the shock absorber.
(e) Point the 'OUT' mark on the upper spring seat to outside of the vehicle from its installation position.
(f) Install the bearing and suspension support.

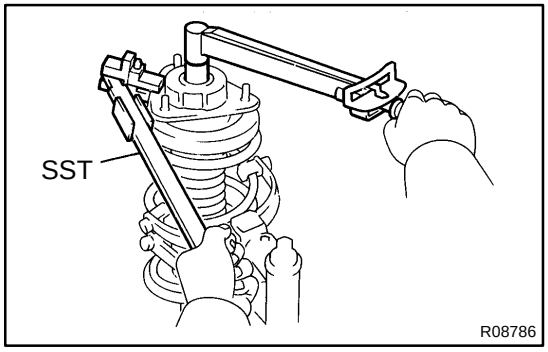

(g) Using SST to hold the suspension support, install a new nut.
SST 09729-22031
Torque: 47 N·m (480 kgf·cm, 35 ft·lbf)
(h) Remove the SST.

NOTICE:

Check that the bearing fits into the recess in the suspension support.

SR0KB-02

REASSEMBLY

NOTICE:

When using a vise, do not overtighten it.

1. COAT WITH POWER STEERING FLUID OR MOLYBDENUM DISULFIDE LITHIUM BASE GREASE
(See page SR-56)

2. INSTALL OIL SEAL

(a) Coat a new oil seal lip with power steering fluid.

(b) Using SST, press in the oil seal.

SST 09950-60010 (09951-00250, 09951-00400, 09952-06010), 09950-70010 (09951-07360)

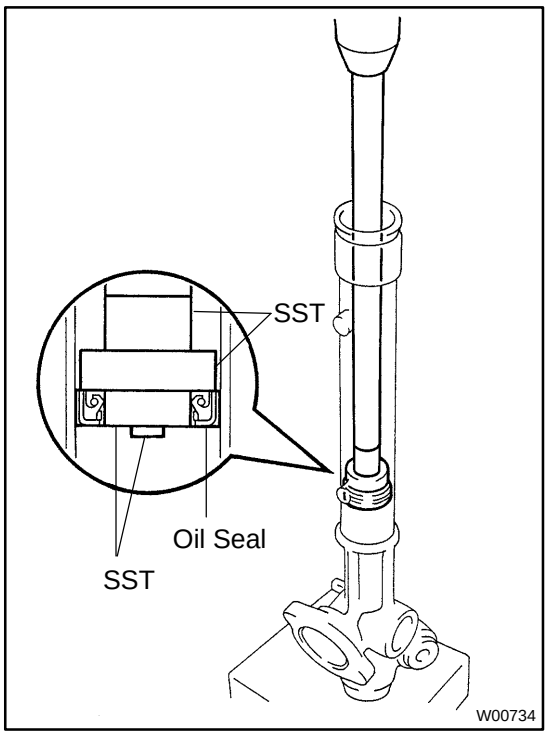

NOTICE:

Make sure you install the oil seal facing the correct direction.Take care that the oil seal does not get reversed as you install it.

3. INSTALL STEERING RACK

(a) Install SST to the rack.

SST 09631-20051

HINT:

If necessary, scrape the burrs off the rack teeth end and burnish.

(b) Coat SST with power steering fluid.

(c) Install the rack into the rack housing.

(d) Remove the SST.

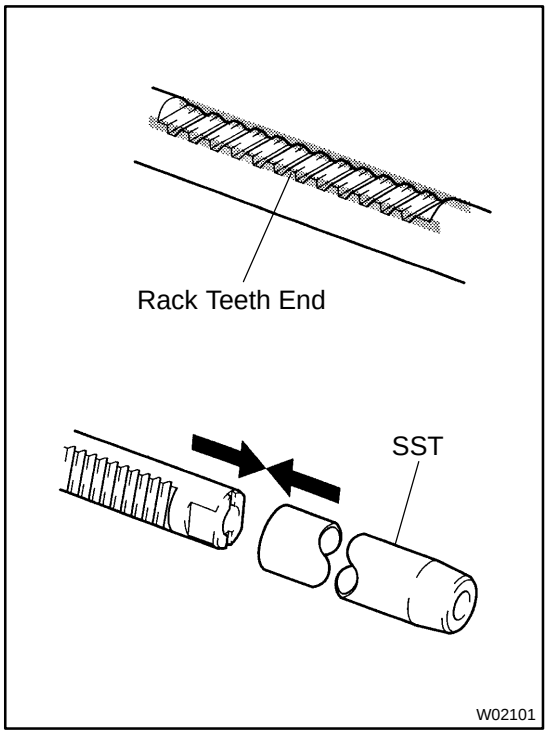

4. INSTALL OIL SEAL

(a) To prevent oil seal lip damage, install SST to the steering rack, and apply power steering fluid.

SST 09631-20051

HINT:

Install SST to the steering rack side without teeth.

(b) Coat a new oil seal lip with power steering fluid.

(c) Install the oil seal.

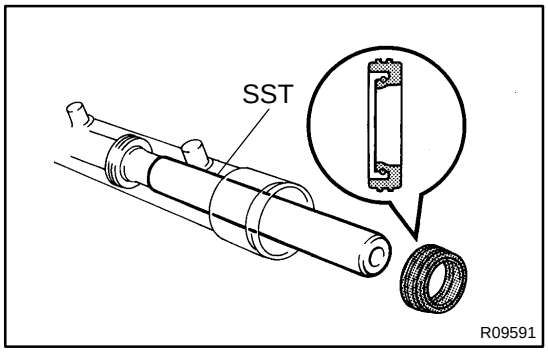

NOTICE:

Make sure you install the oil seal facing the correct direction.

(d) Remove the SST.

HINT:

Hold the oil seal down with your hand to prevent it coming out together with SST.

5. INSTALL CYLINDER END STOPPER

(a) Install the stopper into the rack housing.

(b) Using snap ring pliers, install the snap ring.

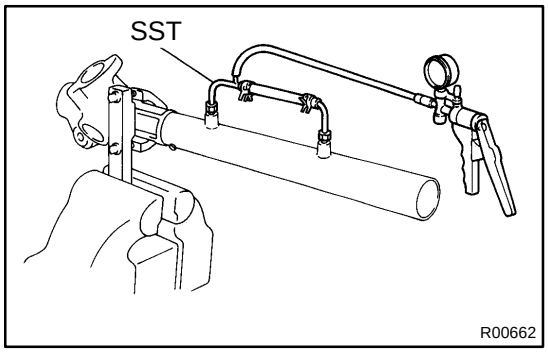

6. AIR TIGHTNESS TEST

(a) Install SST to the rack housing.
SST 09631-12071

(b) Apply 53.3 kPa (400 mmHg, 15.75 in.Hg) of vacuum for about 30 seconds.

(c) Check that there is no change in the vacuum.

If there is change in the vacuum, check the installation of the oil seals.

7. INSTALL RACK HOUSING NO.2 GROMMET

Install the grommet to the rack housing No.2 bracket.

8. INSTALL RACK HOUSING NO.2 BRACKET

(a) Align the matchmarks on the bracket and rack housing, and install the bracket.

(b) Torque the bolt.
Torque: 39 N·m (400 kgf·cm, 29 ft·lbf)

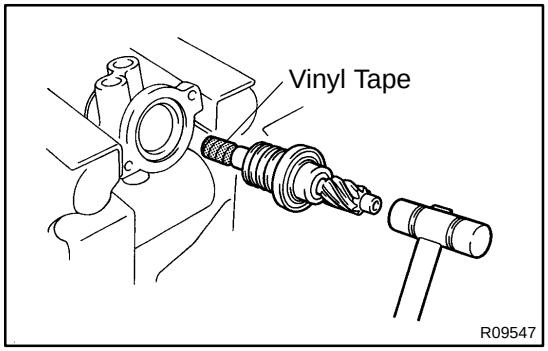

9. INSTALL CONTROL VALVE ASSEMBLY

(a) Coat the teflon rings with power steering fluid.

(b) To prevent oil seal lip damage, wind vinyl tape on the serrated part of the valve shaft.

(c) Using a plastic hammer, tap in the valve assembly into the valve housing.

NOTICE:

Be careful not to damage the teflon rings and oil seal.

10. INSTALL CONTROL VALVE HOUSING WITH CONTROL VALVE ASSEMBLY

(a) Coat a new O-ring with power steering fluid and install it to the rack housing.

(b) Align the matchmarks on the valve housing and rack housing.

(c) Torque the 2 bolts.
Torque: 31 N·m (315 kgf·cm, 23 ft·lbf)

11. INSTALL DUST COVER

12. INSTALL BEARING

(a) Coat a new bearing with molybdenum disulfide lithium base grease.

(b) Install the bearing to the rack housing.

13. INSTALL RACK HOUSING CAP

(a) Apply sealant to 2 or 3 threads of the cap.
Sealant: Part No.08833-00080, THREE BOND 1344, LOCTITE 242 or equivalent

(b) Temporarily install the cap.

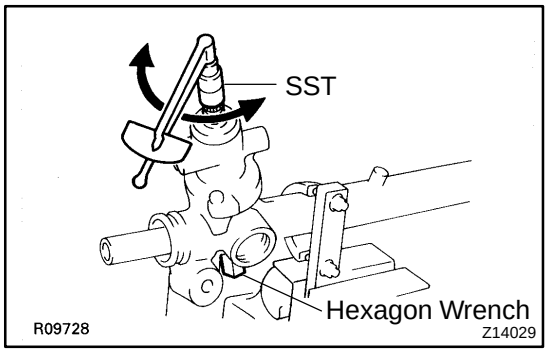

(c) Use SST and a torque wrench to measure the rotational torque of the control valve shaft, and make a note of the torque value.
SST 09616-00010

(d) Using a hexagon wrench (24 mm), torque the cap.
Torque: 15 N·m (150 kgf·cm, 11 ft·lbf)

(e) Using SST, a torque wrench and hexagon wrench (24 mm), loosen the cap until the preload is within specification.
SST 09616-00010
Preload (turning):
Torque value from (c) above + 0.1 - 0.2 N·m (1 - 2 kgf·cm, 0.9 - 1.7 in.·lbf)

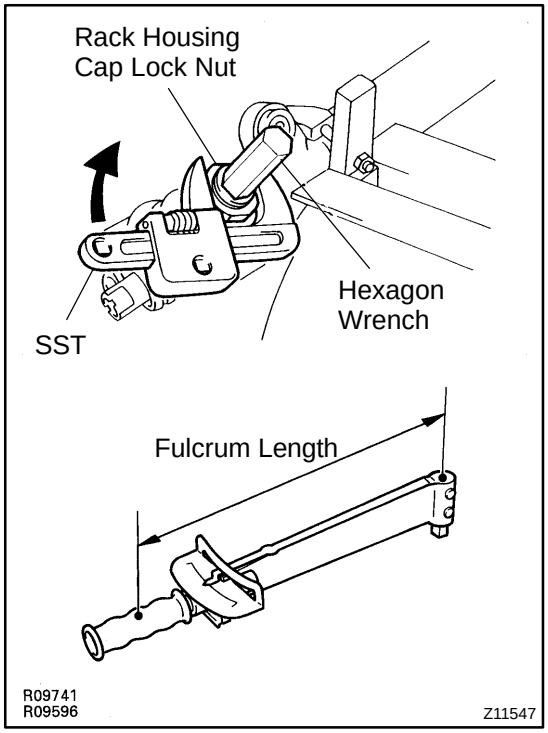

14. INSTALL RACK HOUSING CAP LOCK NUT

(a) Apply sealant to 2 or 3 threads of the nut.
Sealant: Part No.08833-00080, THREE BOND 1344, LOCTITE 242 or equivalent

(b) Using SST, torque the nut.
SST 09922-10010
Torque: 50 N·m (513 kgf·cm, 37 ft·lbf)

NOTICE:
Use SST 09922-10010 in the direction shown in the illustration.

HINT:
Use a torque wrench with a fulcrum length of 345 mm (13.58 in.).

15. INSTALL RACK GUIDE SEAT, RACK GUIDE, RACK GUIDE SPRING AND RACK GUIDE SPRING CAP

(a) Install the seat to the guide.

(b) Apply sealant to 2 or 3 threads of the cap.
Sealant: Part No.08833-00080, THREE BOND 1344, LOCTITE 242 or equivalent

(c) Temporarily install the cap.

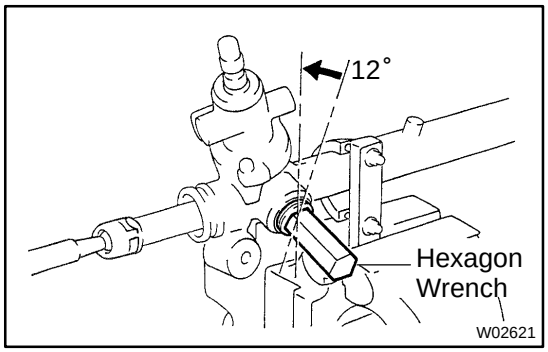

16. ADJUST TOTAL PRELOAD

(a) To prevent the steering rack teeth from damaging the oil seal lip, temporarily install the RH and LH rack ends.

(b) Using a hexagon wrench (24 mm), torque the rack guide spring cap.
Torque: 25 N·m (250 kgf·cm, 18 ft·lbf)

(c) Using a hexagon wrench (24 mm), return the cap 12°.

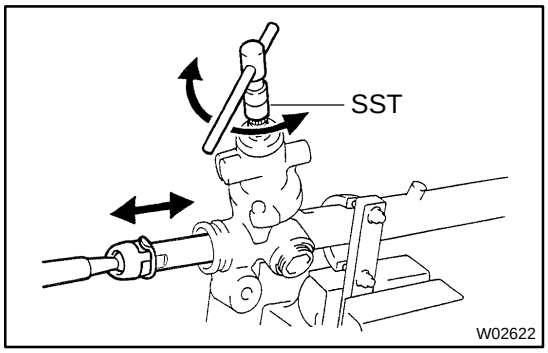

(d) Using SST, turn the control valve shaft right and left 1 or 2 times.
SST 09616-00010

(e) Using a hexagon wrench (24 mm), loosen the cap until the rack guide spring is not functioning.

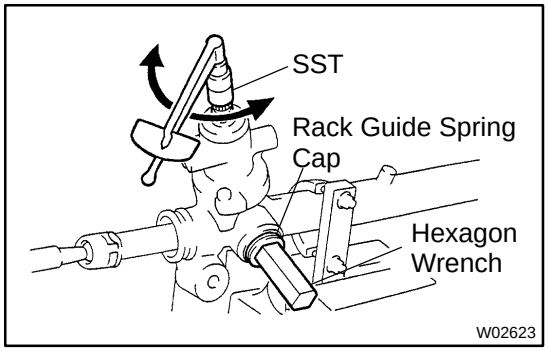

(f) Using SST, a torque wrench and hexagon wrench (24 mm), tighten the cap until the preload is within specification.
SST 09616-00010
Preload (turning):
1.2-1.5 N·m (12-15 kgf·cm, 10.4-13.0 in.·lbf)

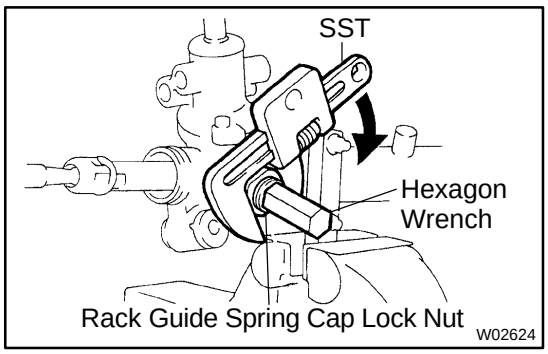

17. INSTALL RACK GUIDE SPRING CAP LOCK NUT

(a) Apply sealant to 2 or 3 threads of the nut.
Sealant: Part No.08833-00080, THREE BOND 1344, LOCTITE 242 or equivalent

(b) Using a hexagon wrench (24 mm) to hold the rack guide spring cap and using SST, torque the nut.
SST 09922-10010
Torque: 50 N·m (513 kgf·cm, 37 ft·lbf)

NOTICE:
Use SST 09922-10010 in the direction shown in the illustration.
HINT:
Use a torque wrench with a fulcrum length of 345 mm (13.58 in.).

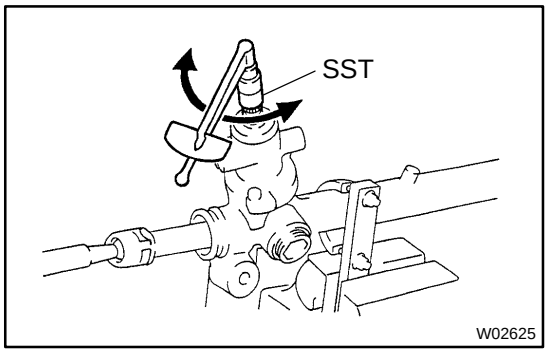

(c) Using SST and a torque wrench, recheck the total preload.
SST 09616-00010
Preload (turning):
1.2-1.5 N·m (12-15 kgf·cm, 10.4-13.0 in.·lbf)

(d) Remove the RH and LH rack ends.

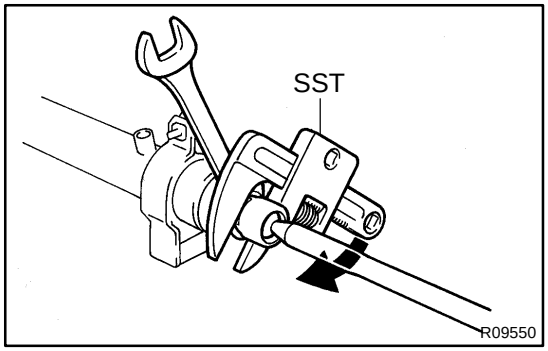

18. INSTALL RH AND LH CLAW WASHERS AND RACK ENDS

(a) Install a new washer, and temporarily tighten the rack end.

HINT:
Align the claws of the washer with the steering rack grooves.

(b) Using a spanner to hold the steering rack steady, and using SST, torque the rack end.
SST 09922-10010
Torque: 60 N·m (615 kgf·cm, 45 ft·lbf)

NOTICE:
Use SST 09922-10010 in the direction shown in the illustration.
HINT:
Use a torque wrench with a fulcrum length of 345 mm (13.58 in.).

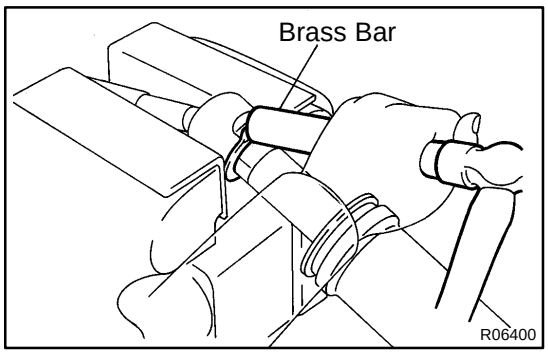

(c) Using a brass bar and hammer, stake the washer.

NOTICE:

Avoid any impact to the rack.

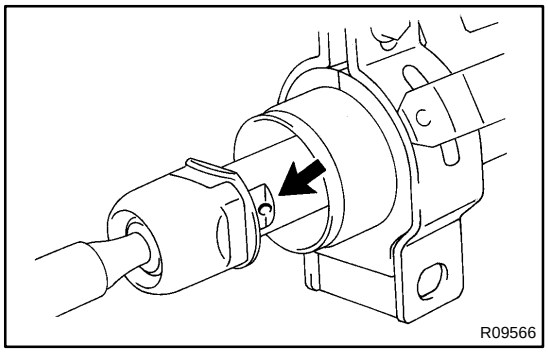

19. INSTALL RH AND LH RACK BOOTS, CLAMPS AND CLIPS

(a) Ensure that the steering rack hole is not clogged with grease.

HINT:

If the hole is clogged, the pressure inside the boot will change after it is assembled and the steering wheel turned.

(b) Install the boot.

NOTICE:

Be careful not to damage or twist the boot.

(c) Tighten the clamp, as shown in the illustration.

(d) Install the clip.

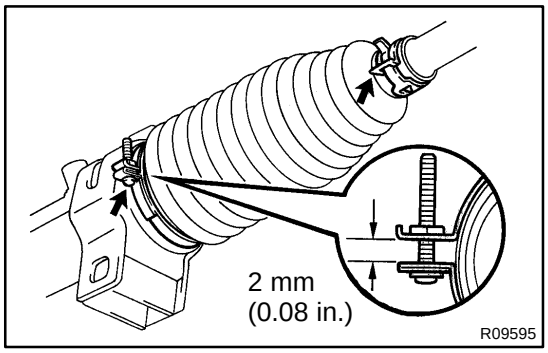

20. INSTALL RH AND LH TIE ROD ENDS AND LOCK NUTS

(a) Screw the lock nut and tie rod end onto the rack end until the matchmarks are aligned.

(b) After adjusting toe-in, torque the nut.
(See page SA-15)
Torque: 56 N·m (570 kgf·cm, 41 ft·lbf)

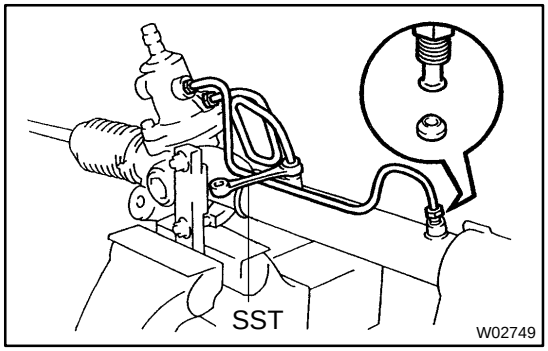

21. INSTALL 2 TURN PRESSURE TUBES

(a) Install the 2 union seats to the rack housing.

(b) Using SST, install the tube.
SST 09633-00020
Torque: 19 N·m (195 kgf·cm, 14 ft·lbf)

HINT:

- Use a torque wrench with a fulcrum length of 250 mm (9.84 in.)
- This torque value is effective in case that SST is parallel to a torque wrench.

SA13O-01

REASSEMBLY

ASSEMBLE NO.2 LOWER SUSPENSION ARM

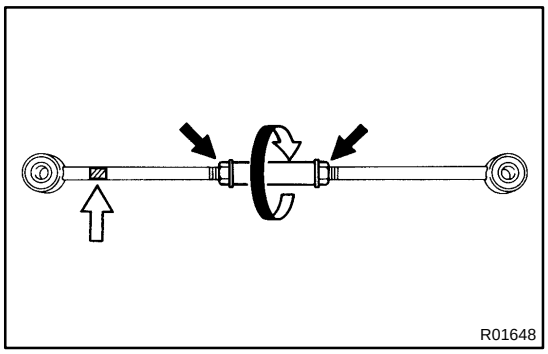

(a) Install the lock nuts to the arm.

(b) Turn the adjusting tube and assemble the No.2 lower suspension arm.

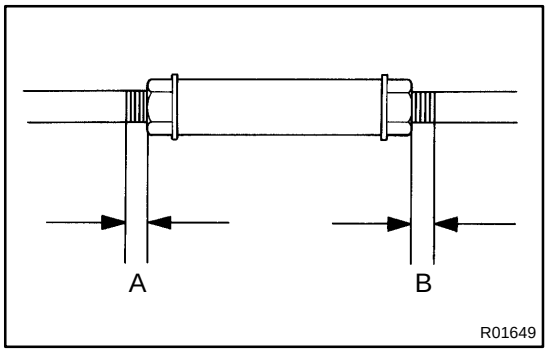

HINT:

When assembling the No.2 lower suspension arm, try to secure dimensions A and B shown in the illustration as close as possible to the specification.

Maximum difference: 3 mm (0.12 in.)

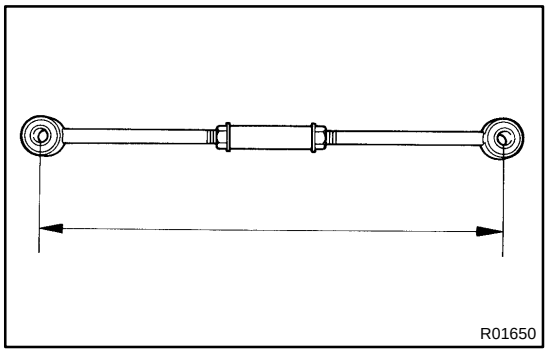

(c) Adjust the No.2 lower suspension arm length by turning the adjusting tube.

Arm length: 494.5 ± 1.5 mm (19.468 ± 0.059 in.)

(d) Temporarily tighten the 2 lock nuts.

HINT:

After adjusting the rear wheel alignment, torque the lock nuts. (See page SA-7)

SA13J-02

REASSEMBLY

1. INSTALL LOWER COIL SPRING INSULATOR ONTO SHOCK ABSORBER

HINT:

Fit the gap of the lower coil spring insulator with the gap of the shock absorber.

2. INSTALL SPRING BUMPER TO PISTON ROD

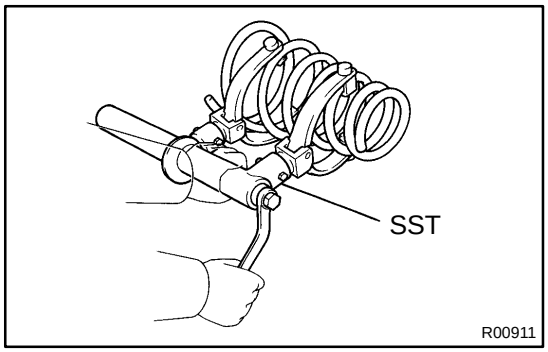

3. INSTALL COIL SPRING

(a) Using SST, compress the coil spring.
SST 09727-30020

NOTICE:

Do not use an impact wrench. It will damage the SST.

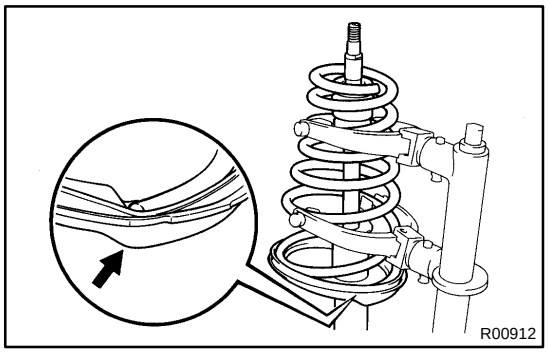

(b) Install the coil spring to the shock absorber.

HINT:

Fit the lower end of the coil spring into the gap of the lower coil spring insulator.

4. INSTALL DUST COVER AND SUSPENSION SUPPORT

(a) Install the dust cover and suspension support to the piston rod.

(b) Install the collar.

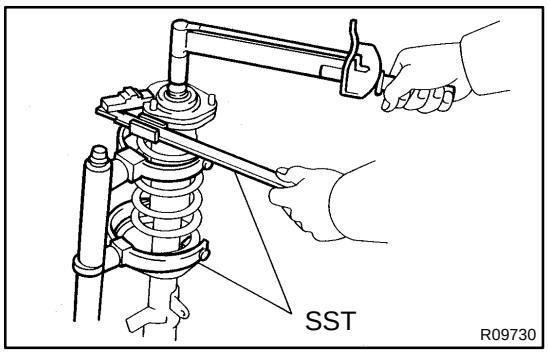

(c) Using SST to hold the suspension support, install a new nut.
SST 09729-22031
Torque: 49 N·m (500 kgf·cm, 36 ft·lbf)

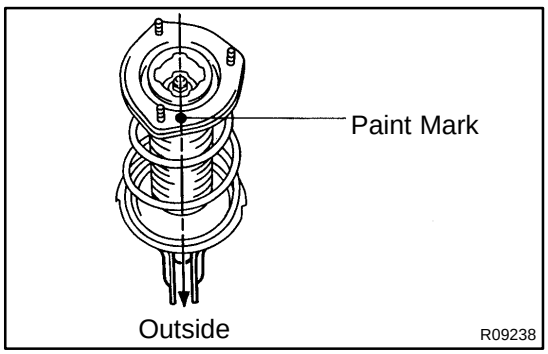

(d) Rotate the suspension support and set it in the direction shown in the illustration.

(e) Remove the SST.

HINT:

After removing SST, recheck the direction of the suspension support.

MX04U-02

REASSEMBLY

1. ASSEMBLE DIFFERENTIAL CASE

(a) Install the correct thrust washers and side gears. Refer to the table below, select thrust washers which will ensure that the backlash is within the specification. Try to select washers of the same size for both sides.

Standard backlash:
0.05 - 0.20 mm (0.0020 - 0.0079 in.)

Thickness mm (in.)	Thickness mm (in.)
0.95 (0.0374)	1.10 (0.0433)
1.00 (0.0394)	1.15 (0.0453)
1.05 (0.0413)	1.20 (0.0472)

Install the thrust washers and side gears in the differential case.

(b) Install the pinion shaft.

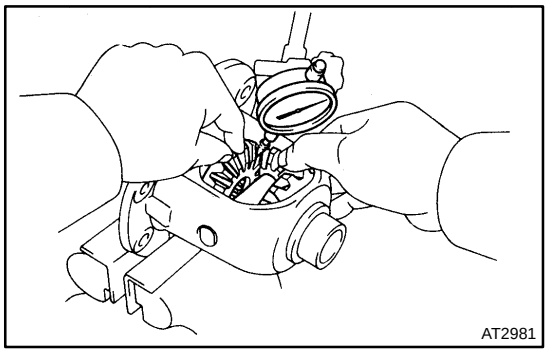
AT2981

(c) Inspect the side gear backlash.
Using a dial indicator, measure the side gear backlash while holding one pinion gear toward the case.
Standard backlash:
0.05 - 0.20 mm (0.0020 - 0.0079 in.)

If the backlash is not within the specification, install a thrust washer of different thickness.

(d) Using a pin punch and hammer, drive in the straight pin through the case and hole in the pinion shaft.

(e) Stake the differential case.

2. INSTALL RING GEAR ON DIFFERENTIAL CASE

(a) Clean the contact surface of the differential case and the threads of the ring gear and differential case.

(b) Heat the ring gear in boiling water.

(c) Carefully take the ring gear out of the water.

(d) After moisture on the ring gear has completely evaporated, quickly install the ring gear to the differential case.

HINT:
Align the matchmarks on the differential case and the ring gear.

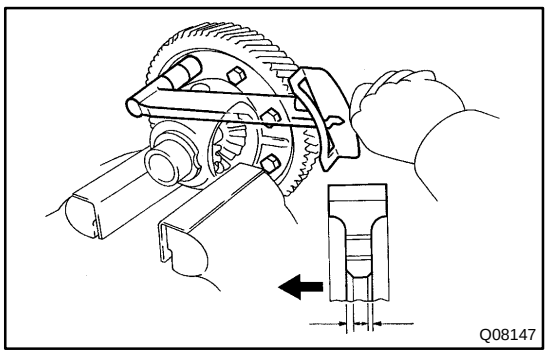
Q08147

(e) Temporarily install the 8 bolts.

NOTICE:
The ring gear set bolts should not be torqued until the ring gear has cooled sufficiently.

(f) After the ring gear has cooled sufficiently, torque the ring gear set bolts.
Torque: 83 N·m (850 kgf·cm, 61 ft·lbf)

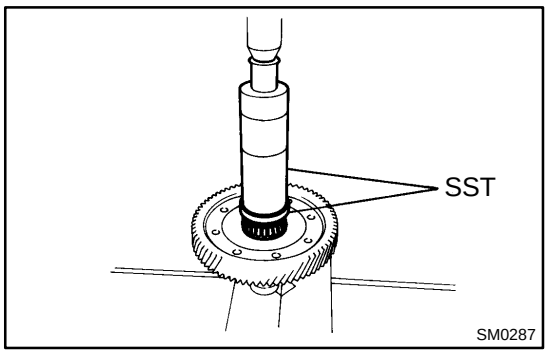

3. INSTALL SIDE BEARING TO DIFFERENTIAL CASE

(a) Using SST and a press, install a new side bearing to the transmission case side.
SST 09316- 60011 (09316- 00011), 09350- 32014 (09351-32120)

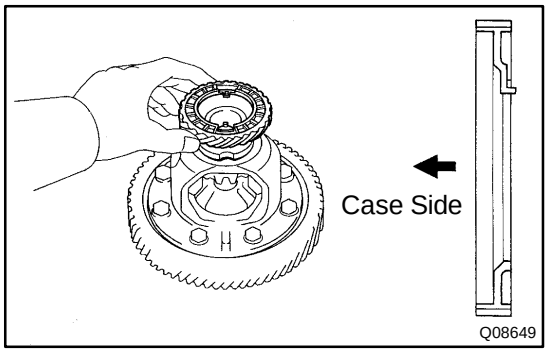

(b) Install the vehicle speed sensor drive gear to the transaxle case side.

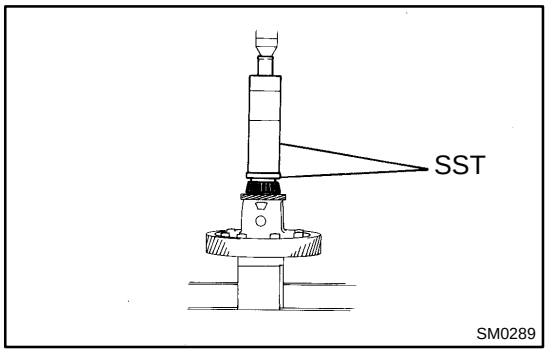

(c) Using SST and a press, install a new side bearing to the transaxle case side.
SST 09316- 60011 (09316- 00011), 09350- 32014 (09351-32120)

NOTICE:
Install the black cage bearing on the vehicle speed sensor drive gear side.

4. ADJUST DIFFERENTIAL CASE SIDE BEARING PRELOAD

(a) Install the differential to the transaxle case.
(b) Install the transmission case.
(c) Install and torque the case bolts.
Torque: 29 N·m (300 kgf·cm, 22 ft·lbf)
(d) Install the shim into the transmission case.
(e) Install the bearing retainer without an O-ring.
(f) Install and torque the 6 bolts.
Torque: 18 N·m (185 kgf·cm, 13 ft·lbf)

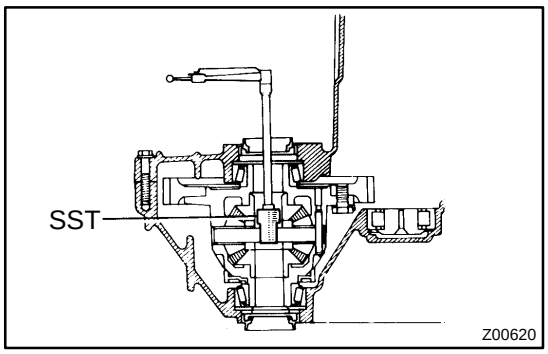

(g) Using SST and a torque wrench, measure the preload.
SST 09564-3201 1
Preload (at starting):
0.8 - 1.6 N·m (8 - 16 kgf·cm, 6.9 - 13.9 in.·lbf)

If the preload is not within the specification, remove the transmission case side bearing retainer. Select another shim.
HINT:
The preload will change by approx. 0.3 - 0.4 N·m (3 - 4 kgf·cm, 2.6 - 3.5 in.·lbf) corresponding to each 0.05 mm (0.0019 in.) change in shim thickness.

Mark	Thickness mm (in.)	Mark	Thickness mm (in.)
1	1.90 (0.0748)	11	2.40 (0.0945)
2	1.95 (0.0768)	12	2.45 (0.0965)
3	2.00 (0.0787)	13	2.50 (0.0984)
4	2.05 (0.0807)	14	2.55 (0.1004)
5	2.10 (0.0827)	15	2.60 (0.1024)
6	2.15 (0.0846)	16	2.65 (0.1043)
7	2.20 (0.0866)	17	2.70 (0.1063)
8	2.25 (0.0886)	18	2.75 (0.1083)
9	2.30 (0.0906)	19	2.80 (0.1102)
10	2.35 (0.0925)	-	-

(h) Remove the 6 bolts.
(i) Remove the bearing retainer and shim.
(j) Remove the 17 bolts.
(k) Remove the transmission case.

MX04M-06

REASSEMBLY

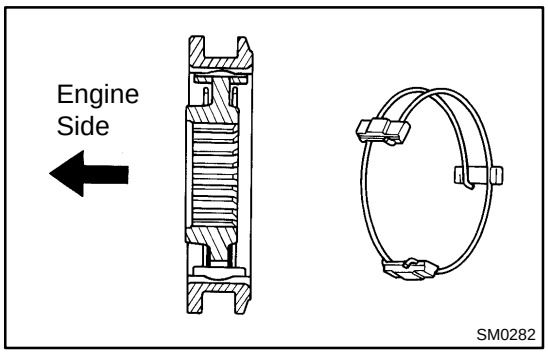

HINT:

Coat all of the sliding and rotating surfaces with gear oil before reassembly.

1. INSTALL NO.2 CLUTCH HUB INTO HUB SLEEVE

(a) Install the clutch hub and shifting keys to the hub sleeve.

(b) Install the shifting key springs under the shifting keys.

NOTICE:

Position the key springs so that their end gaps are not aligned.

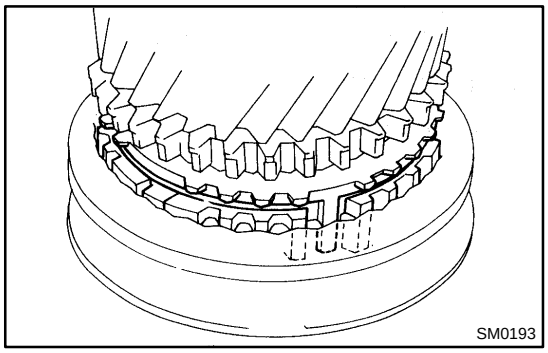

2. INSTALL 3RD GEAR, NEEDLE ROLLER BEARING, SYNCHRONIZER RING AND NO.2 HUB SLEEVE ASSEMBLY TO INPUT SHAFT

(a) Apply gear oil to the needle roller bearings.

(b) Place the synchronizer ring (for the 3rd gear) on the gear and align the ring slots with the shifting keys.

NOTICE:

Do not install the synchronizer ring for 4th gear.

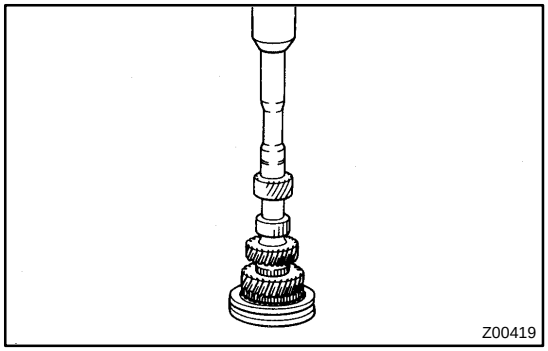

(c) Using a press, install the 3rd gear and No.2 hub sleeve.

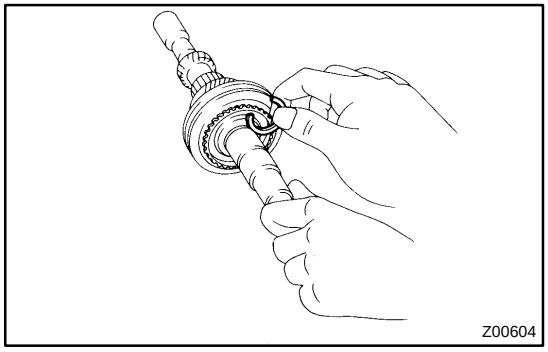

3. INSTALL SNAP RING

(a) Select a snap ring that allows the minimum axial play.

Mark	Thickness mm (in.)
1	1.95-2.00 (0.0768-0.0787)
2	2.00-2.05 (0.0787-0.0807)
3	2.05-2.10 (0.0807-0.0827)
4	2.10-2.15 (0.0827-0.0846)
5	2.15-2.20 (0.0846-0.0866)
6	2.20-2.25 (0.0866-0.0886)

(b) Using a snap ring expander, install the snap ring.

4. INSPECT 3RD GEAR THRUST CLEARANCE
(See page MX-20)

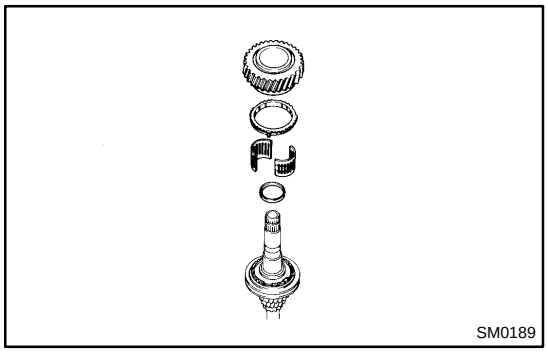
SM0189

5. INSTALL SYNCHRONIZER RING, NEEDLE ROLLER BEARING, SPACER, 4TH GEAR AND REAR BALL BEARING

(a) Apply gear oil to the needle roller bearings.

(b) Install the spacer and needle roller bearings.

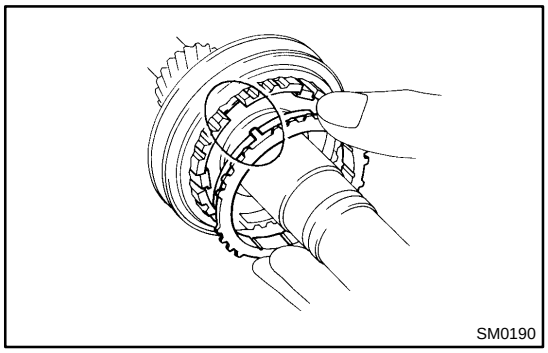
SM0190

(c) Place the synchronizer ring on the gear.

HINT:

Align the ring slots with the shifting keys and the ring projections with the hub slots.

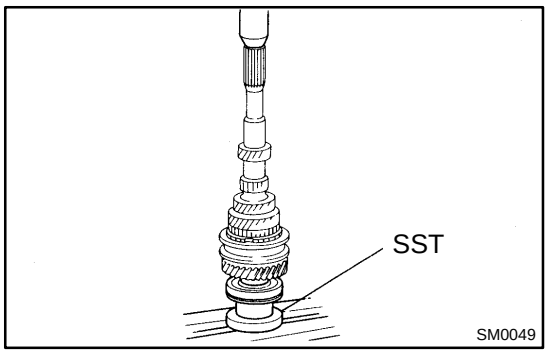

SM0049

(d) Using SST and a press, install the rear ball bearing.
SST 09608-00071

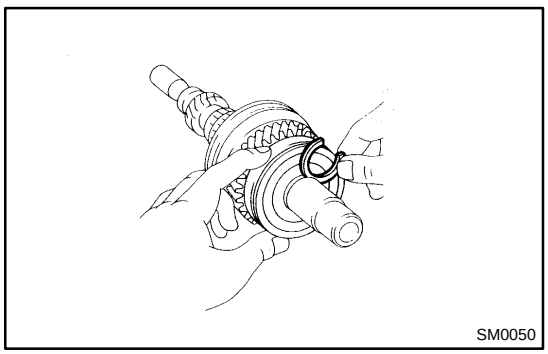
SM0050

6. INSTALL SNAP RING

(a) Select a snap ring that allows the minimum axial play.

Mark	Thickness mm (in.)
A	2.15-2.20 (0.0846-0.0866)
B	2.20-2.25 (0.0866-0.0886)
C	2.25-2.30 (0.0886-0.0906)
D	2.30-2.35 (0.0906-0.0925)
E	2.35-2.40 (0.0925-0.0945)

(b) Using a screwdriver and hammer, tap in the snap ring.

7. INSPECT 4TH GEAR THRUST CLEARANCE
(See page MX-20)

MX04I-04

REASSEMBLY

Reassembly is in the reverse order of disassembly (See page MX-11).

NOTICE:

When working with FIPG material, you must observe the following items.

- **Using a razor blade and gasket scraper, remove all the old FIPG material from the gasket surfaces.**
- **Thoroughly clean all components to remove all the loose material.**
- **Clean both sealing surfaces with a non-residue solvent.**
- **Apply FIPG in an approx. 1 mm (0.04 in.) wide bead along the sealing surface.**
- **Parts must be assembled within 10 minutes of application. Otherwise, the FIPG material must be removed and reapplied.**

HINT:

Coat all of the sliding and rotating surfaces with gear oil before reassembly.

MX04Q-06

REASSEMBLY

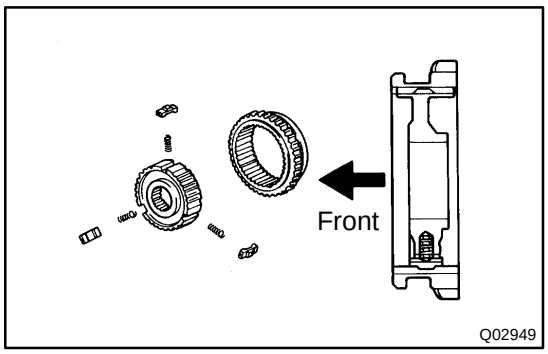

HINT:

Coat all of the sliding and rotating surfaces with gear oil before reassembly.

1. INSTALL NO.1 CLUTCH HUB INTO HUB SLEEVE

(a) Install the 3 springs and shifting keys to the clutch hub.

(b) Install the hub sleeve to the clutch hub.

HINT:

Position the identification groove of the hub sleeve to the front of the transmission.

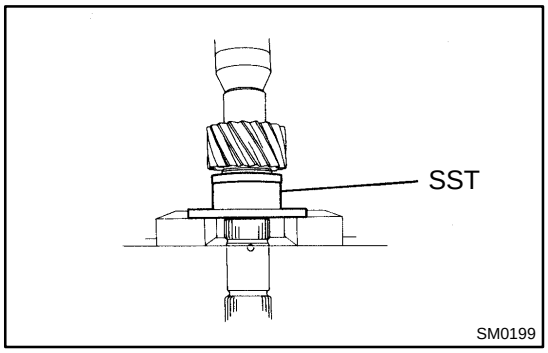

2. INSTALL THRUST WASHER, 1ST GEAR, NEEDLE ROLLER BEARING, SYNCHRONIZER RING AND NO.1 HUB SLEEVE TO OUTPUT SHAFT

(a) Using SST and a press, install the thrust washer.

SST 09316-6001 1 (09316-00041)

(b) Apply gear oil to the needle roller bearing.

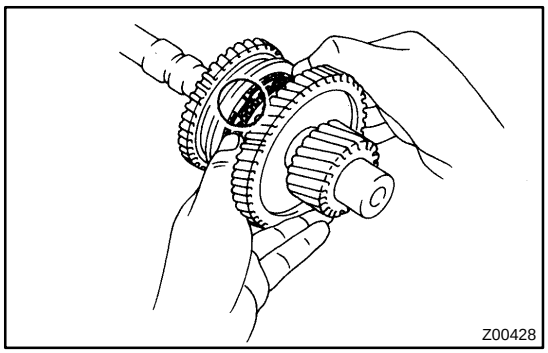

(c) Place the synchronizer ring on the gear and align the ring slots with the shifting keys.

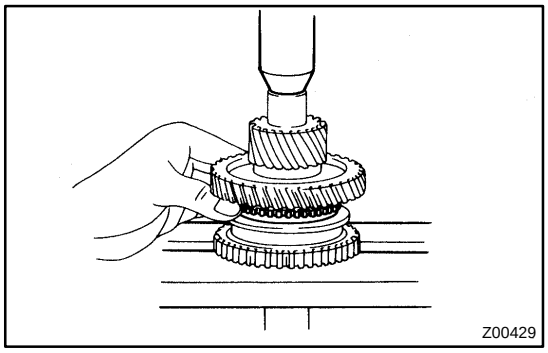

(d) Using a press, install the 1st gear and No.1 hub sleeve.

3. INSPECT 1ST GEAR THRUST CLEARANCE

(See page MX-28)

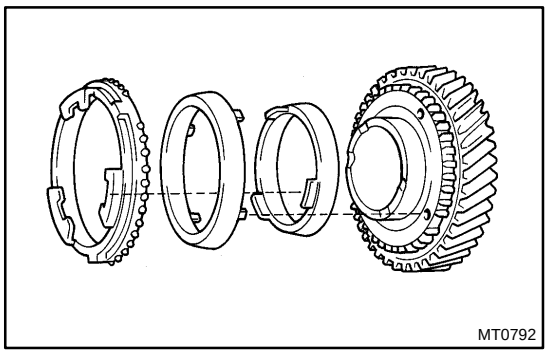

4. INSTALL SYNCHRONIZER RING, 2ND GEAR, NEEDLE ROLLER BEARING AND 3RD DRIVEN GEAR

(a) Install the ball.
(b) Fit the 2nd gear bushing groove securely over the ball when installing the 2nd gear bushing on the shaft.
(c) Place the synchronizer rings on the 2nd gear.
(d) Apply gear oil to the needle roller bearing and install it.
(e) Install the 2nd gear.

NOTICE:
Align the clutch hub grooves with the projections on the synchronizer ring.

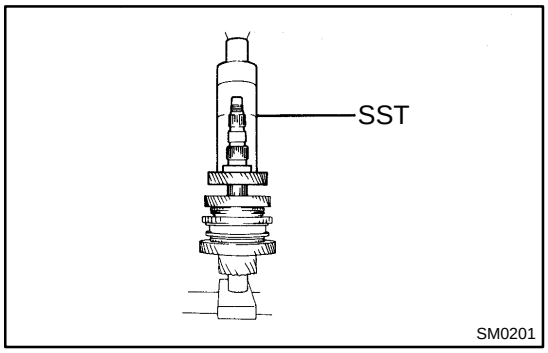

(f) Using SST and a press, install the 3rd driven gear.
SST 09316-6001 1 (09316-00011)

5. INSPECT 2ND GEAR THRUST CLEARANCE
(See page MX-28)

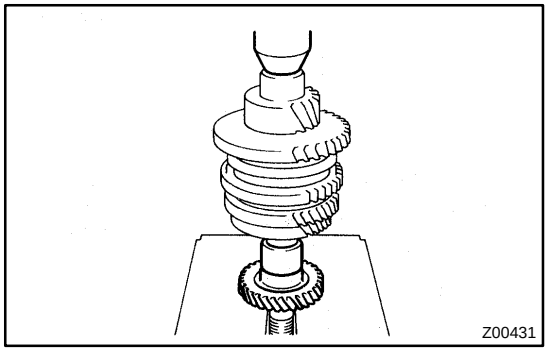

6. INSTALL OUTPUT GEAR SPACER, 4TH DRIVEN GEAR AND RADIAL BALL BEARING

(a) Install the outer gear spacer.
(b) Using a press, install the 4th driven gear and bearing.

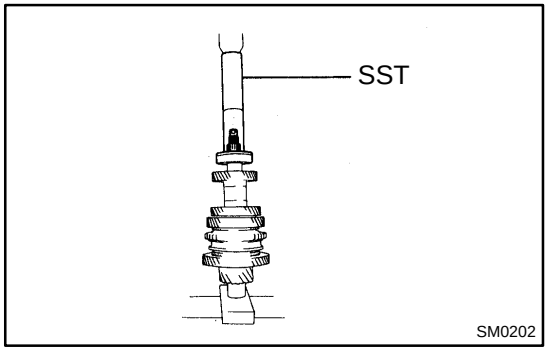

7. INSTALL REAR BEARING

Using SST and a press, install the rear bearing.
SST 09612-2201 1

REASSEMBLY

NOTICE:

When using a vise, do not overtighten it.

1. COAT WITH MOLYBDENUM DISULFIDE LITHIUM BASE GREASE SR0K4-02

(See page SR-19)

2. INSTALL MAIN SHAFT ASSEMBLY

(a) Install the bearing thrust collar and compression spring to the shaft assembly.

(b) Install the shaft assembly into the column upper tube.

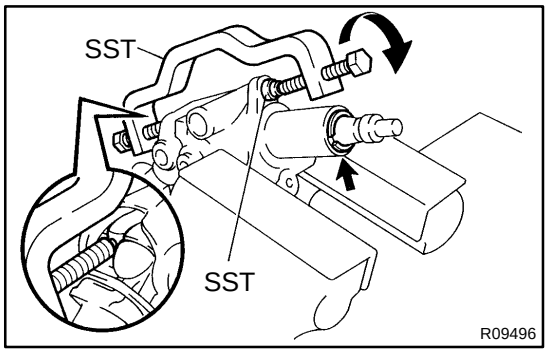

(c) Using SST, compress the compression spring.
SST 09950-4001 1 (09957-04010, 09958-04010)

NOTICE:

Do not bend the universal joint of the main shaft assembly more than 20˚.

(d) Using a snap ring expander, install a new snap ring.

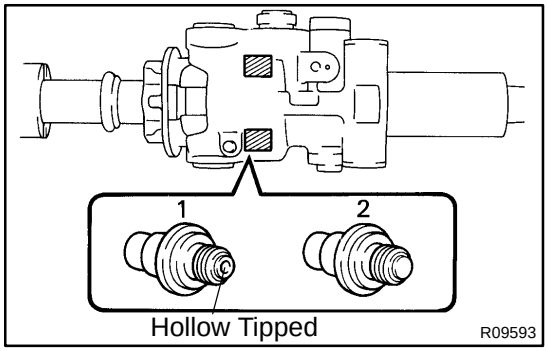

3. SELECT TILT NO.2 BOLTS

Select the bolt with the hollow-tipped thread end when the column upper tube mark is 1, and the bolt with the plain thread end when the mark is 2.

NOTICE:

Select the bolt type to match each number marked in the squares on the upper tube.

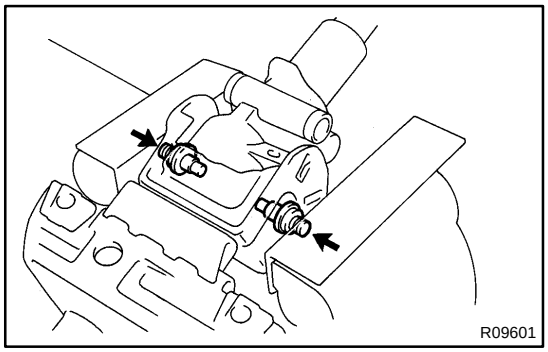

4. INSTALL COLUMN UPPER TUBE WITH MAIN SHAFT ASSEMBLY

Using a vise, press in the 2 tilt No.2 bolts.

5. INSTALL TILT LEVER LOCK SHAFT, TILT LEVER ASSEMBLY, TILT SUB LEVER AND TILT LEVER

Temporarily tighten the tilt lever assembly set bolt.

6. INSTALL 2 TILT PAWLS

(a) Temporarily install the bolt, washer and nut.

HINT:

Install the pin of the pawl into the long hole of the tilt lever/tilt sub lever.

(b) Torque the tilt lever assembly set bolt.

Torque: 2.9 N·m (30 kgf·cm, 26 in.·lbf)

7. ENGAGE AND ADJUST 2 TILT PAWLS

(a) Engage the tilt sub lever side pawl to the center of the ratchet.

(b) Using a spanner (17 mm), while turning the collar, completely engage the tilt lever side pawl to the ratchet.

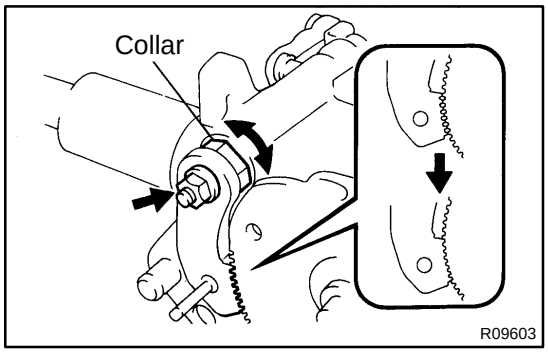

NOTICE:

Do not turn the collar after the tilt lever side pawl is engaged.

(c) Torque the nut.

Torque: 5.9 N·m (60 kgf·cm, 52 in.·lbf)

8. SELECT 2 TILT PAWL STOPPERS

(a) With the tilt pawl and ratchet engaged, install the stoppers.

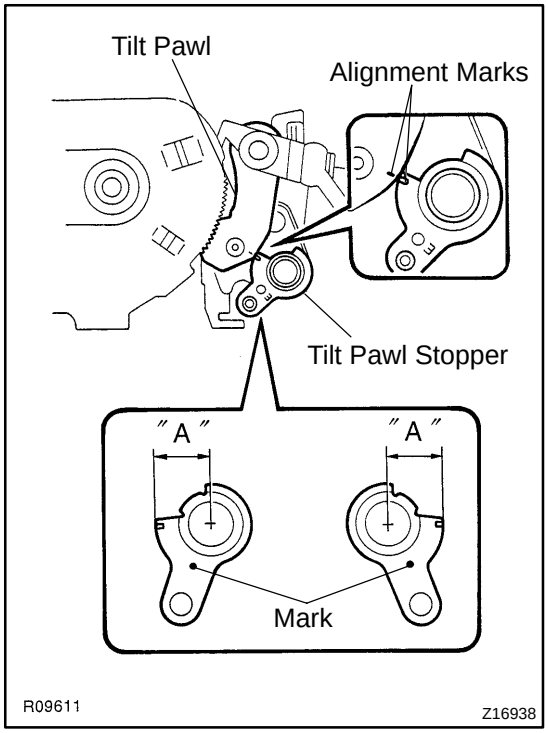

(b) Check that the alignment marks on the stopper and pawl align when the stopper is lightly rotated to the pawl side. If the alignment marks do not align, select the stopper according to the following table.

Tilt sub lever side	Tilt lever side	Dimension "A" mm (in.)
1	A	12.68 - 12.74 (0.4992 - 0.5016)
2	B	12.61 - 12.67 (0.4965 - 0.4988)
3	C	12.54 - 12.60 (0.4937 - 0.4961)
4	D	12.47 - 12.53 (0.4909 - 0.4933)
5	E	12.40 - 12.46 (0.4882 - 0.4906)
6	F	12.33 - 12.39 (0.4854 - 0.4878)
7	G	12.26 - 12.32 (0.4827 - 0.4850)

(c) After selecting the stopper, check that on both sides the pawl and ratchet are fully engaged.

9. INSTALL 2 TILT PAWL STOPPERS

10. Tilt sub lever side:
INSTALL TILT LEVER RETAINER

(a) Install a new E-ring.
(b) Torque the nut.
Torque: 15 N·m (150 kgf·cm, 11 ft·lbf)

11. Tilt lever side:
INSTALL TILT LEVER RETAINER

(a) Install a new E-ring.
(b) Install the collar.
(c) Torque the nut.
Torque: 15 N·m (150 kgf·cm, 11 ft·lbf)

12. INSTALL TURN SIGNAL BRACKET

Torque the 2 bolts.
Torque: 5.4 N·m (55 kgf·cm, 47 in.·lbf)

13. INSTALL 3 TENSION SPRINGS

14. INSTALL COMPRESSION SPRING

(a) Install the 2 bushings to the spring.
(b) Using a torx socket wrench, torque the torx bolt.
Torque: 7.8 N·m (80 kgf·cm, 69 in.·lbf)

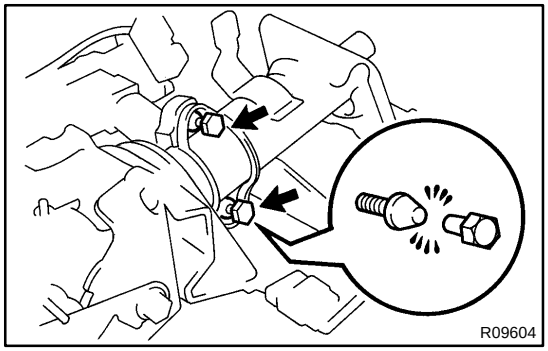

15. INSTALL COLUMN UPPER BRACKET AND COLUMN UPPER CLAMP

Tighten 2 new tapered-head bolts until the bolt head breaks off.

16. INSTALL WIRE HARNESS CLAMP AND COLUMN PROTECTOR

Torque the 2 screws.
Torque: 2.9 N·m (30 kgf·cm, 26 in.·lbf)

17. INSTALL KEY CYLINDER ILLUMINATION

Tighten the screw.

18. INSTALL INTERMEDIATE SHAFT

(a) Align the matchmarks on the intermediate shaft and main shaft.
(b) Torque the bolt.
Torque: 35 N·m (360 kgf·cm, 26 ft·lbf)

19. CHECK TILT STEERING OPERATION

(a) Check that there is no axial play at the end of the main shaft.

(b) With the main shaft in the neutral position, pull the tilt lever and check that the main shaft rises to the upper most position.

(c) Lower the main shaft, and check that it locks in the lower most position.

EM1C6-02

REASSEMBLY

HINT:

- Thoroughly clean all parts to be assembled.
- Before installing the parts, apply new engine oil to all sliding and rotating surfaces.
- Replace all gaskets and oil seals with new ones.

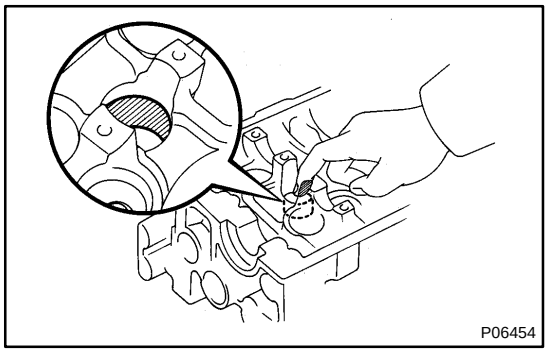

1. INSTALL SPARK PLUG TUBES

HINT:

When using a new cylinder head, spark plug tubes must be installed.

(a) Apply adhesive to the spark plug tube hole of the cylinder head.

Adhesive:
Part No.08833-00070, Adhesive 1324,
THREE BOND 1324 or equivalent

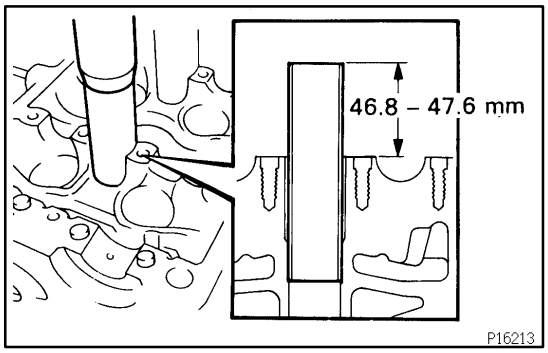

(b) Using a press, press in a new spark plug tube.

(c) Check the there is 46.8 - 47.6 mm (1.843 - 1.874 in.) protruding from the camshaft bearing cap installation of the cylinder head.

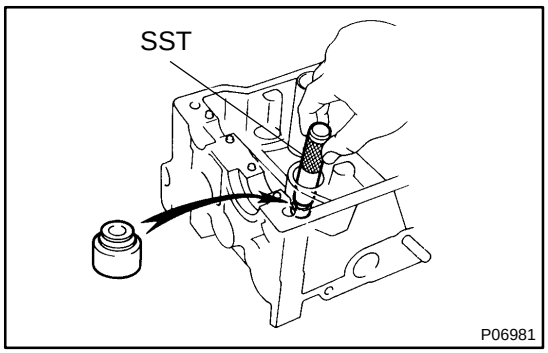

2. INSTALL VALVES

(a) Using SST, push in a new oil seal.
SST 09201-41020

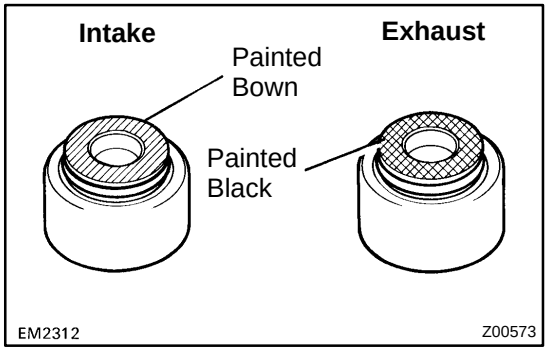

HINT:

The intake valve oil seal is brown and the exhaust valve oil seal is black.

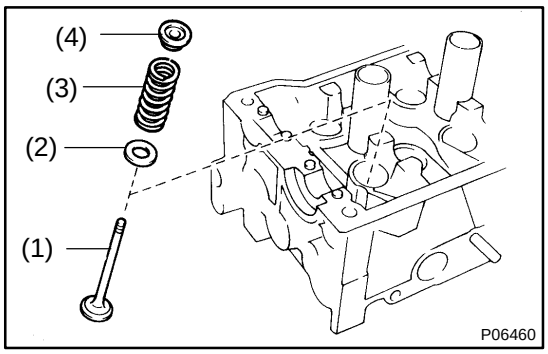

(b) Install these parts:
(1) Valve
(2) Spring seat
(3) Valve spring
(4) Spring retainer

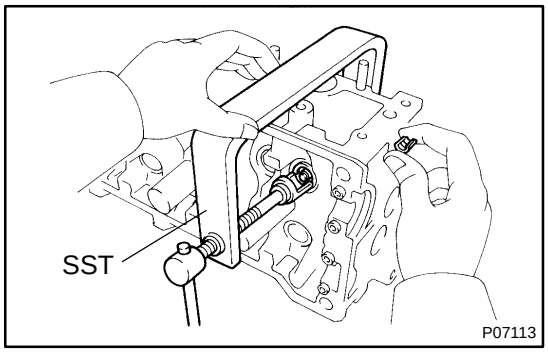

(c) Using SST, compress the valve spring and place the 2 keepers around the valve stem.
SST 09202-70020

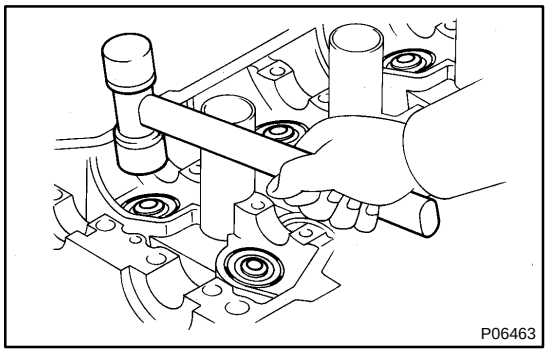

(d) Using a plastic-faced hammer, lightly tap the valve stem tip to assure a proper fit.

3. INSTALL VALVE LIFTERS AND SHIMS

(a) Install the valve lifter and shim.
(b) Check that the valve lifter rotates smoothly by hand.

SR0JQ-04

REMOVAL

1. w/ Airbag:

REMOVE STEERING WHEEL PAD

NOTICE:

If the airbag connector is disconnected with the ignition switch at ON or ACC, DTCs will be recorded. Never use airbag parts from another vehicle. When replacing parts, replace with new parts.

(a) Place the front wheels facing straight ahead.

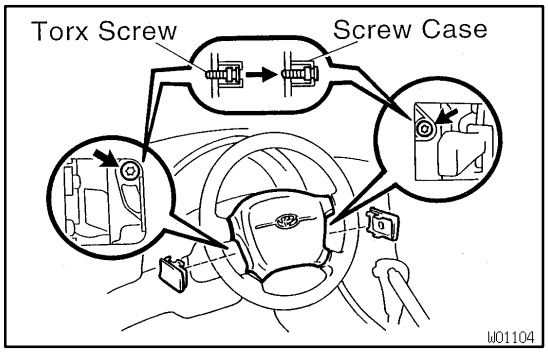

(b) Remove the steering wheel lower No. 2 and No. 3 covers.

(c) Using a torx socket wrench, loosen the 2 torx screws until the groove along the screw circumference catches on the screw case.

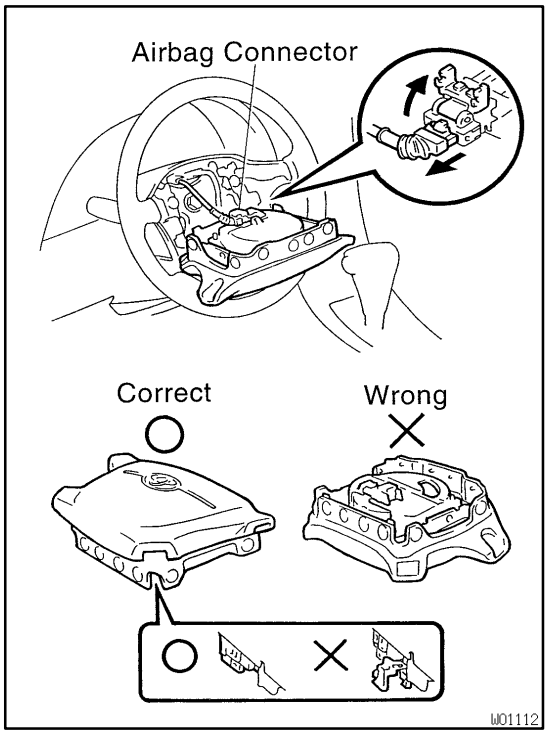

(d) Pull the wheel pad out from the steering wheel and disconnect the airbag connector.

CAUTION:

When storing the wheel pad, keep the upper surface of the pad facing upward. Never disassemble the wheel pad.

NOTICE:

When removing the wheel pad, take care not to pull the airbag wire harness.

2. w/o Airbag:

REMOVE STEERING WHEEL PAD

(a) Remove the screw.

(b) Remove the pad.

(c) Disconnect the terminal.

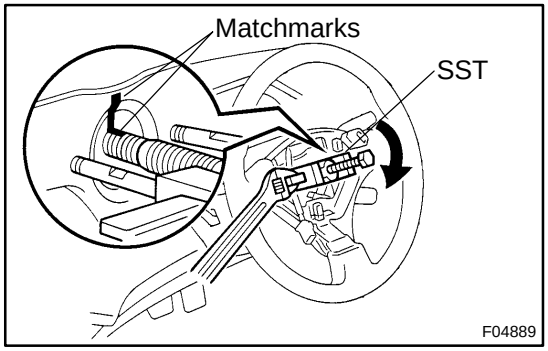

3. REMOVE STEERING WHEEL

(a) Disconnect the connector.

(b) Remove the steering wheel set nut.

(c) Place matchmarks on the steering wheel and main shaft.

(d) Using SST, remove the wheel.

SST 09950-50010 (09951-05010, 09952-05010, 09953-05020, 09954-05020)

4. REMOVE UPPER AND LOWER COLUMN COVERS

Remove the 3 screws.

5. REMOVE COMBINATION SWITCH

(a) Disconnect the connectors.

(b) w/ Airbag:
Disconnect the airbag connector.

(c) Remove the 4 screws.

6. w/ Airbag:
REMOVE SPIRAL CABLE
(See page BE-14)

NOTICE:

Do not disassemble the cable or apply oil to it.

7. REMOVE CLUSTER FINISH LOWER PANEL

8. REMOVE FINISH LOWER NO.1 PANEL

(a) Remove the fuse box opening cover from the panel.

(b) Remove the 2 screws and disconnect the hood lock release lever from the panel.

(c) Remove the 5 panel set screws.

9. REMOVE FINISH PANEL

Remove the 4 bolts.

10. REMOVE NO.2 HEATER TO REGISTER DUCT

Remove the clip.

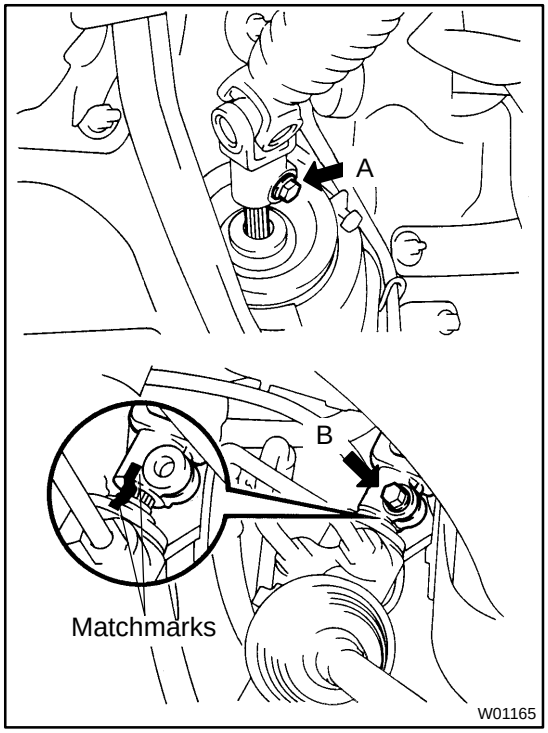

11. DISCONNECT INTERMEDIATE NO.2 SHAFT

(a) Loosen the bolt A and remove the bolt B.

(b) Place matchmarks on the intermediate No.2 shaft and control valve shaft.

12. REMOVE INTERMEDIATE NO.2 SHAFT

Remove the bolt A.

13. REMOVE STEERING COLUMN ASSEMBLY

(a) Disconnect the connectors.

(b) Remove the 4 column assembly set nuts and bolt.

SR0JW-03

REMOVAL

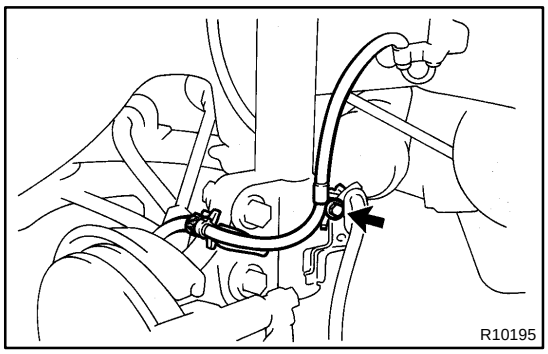

1. REMOVE ENGINE UNDER COVER RH

Remove the 9 bolts.

2. w/ ABS:
DISCONNECT ABS SPEED SENSOR WIRING HARNESS CLAMP

Remove the bolt.

3. REMOVE DRIVE SHAFT RH
(See page SA-26)

4. DISCONNECT 2 VACUUM HOSES

5. DISCONNECT RETURN HOSE

NOTICE:
Take care not to spill fluid on the drive belt.

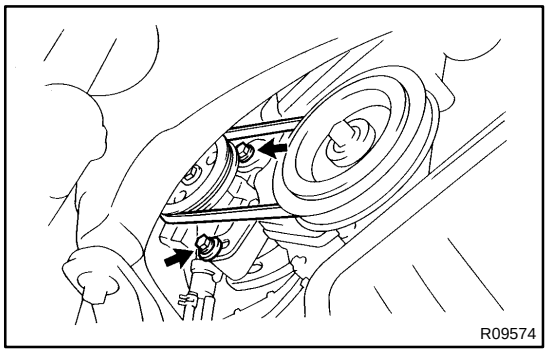

6. REMOVE DRIVE BELT

Loosen the 2 bolts.

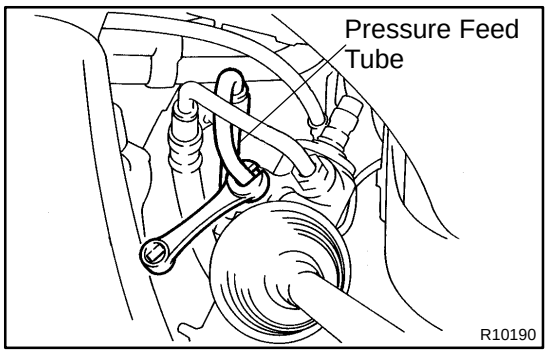

7. DISCONNECT PRESSURE FEED TUBE

(a) Remove the 2 tube clamp bracket set bolts.

(b) Remove the 3 tube clamp brackets and grommets from the tube.

(c) Using SST, disconnect the tube.
SST 09631-22020

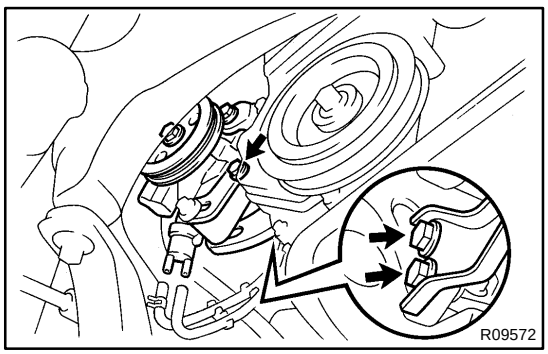

8. REMOVE PS VANE PUMP ASSEMBLY WITH PRESSURE FEED TUBE AND 2 BRACKETS

(a) Remove the 3 bolts.

(b) Remove the 2 bolts and 2 brackets from the pump assembly.

9. REMOVE PRESSURE FEED TUBE

Remove the union bolt and gasket.

BO1ED-03

REMOVAL

1. REMOVE THESE PARTS:

(a) Rear seat
(See page BO-123)

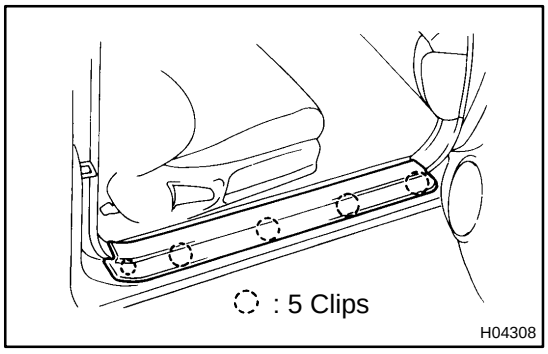

(b) Front door scuff inside plate

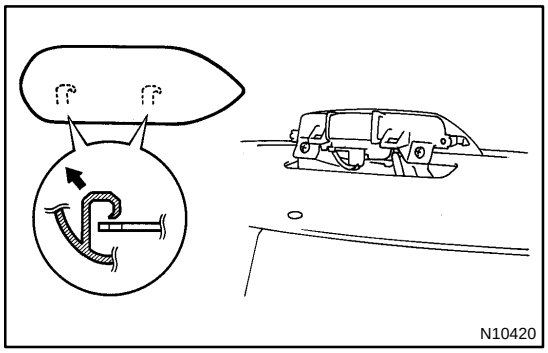

(c) High-mounted stop light and cover
(d) Package tray trim panel
(e) Room partition board LH and RH
(f) Rear seatback hinge
(g) Rear seatback lock striker

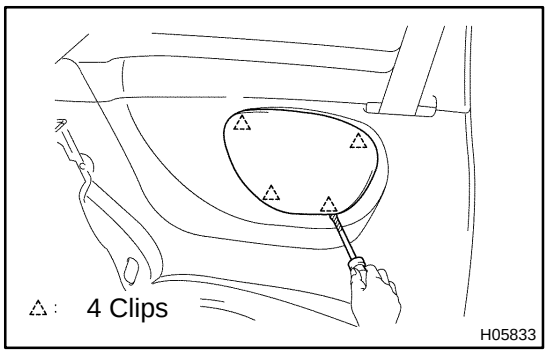

2. REMOVE QUARTER TRIM PANEL

(a) Using a screwdriver, remove the speaker grille.

HINT:
Tape the screwdriver tip before use.

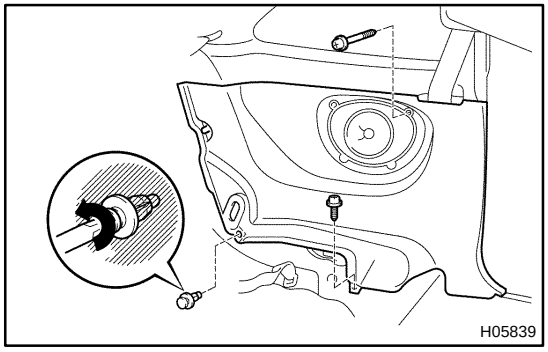

(b) Remove the 2 screws and clip.

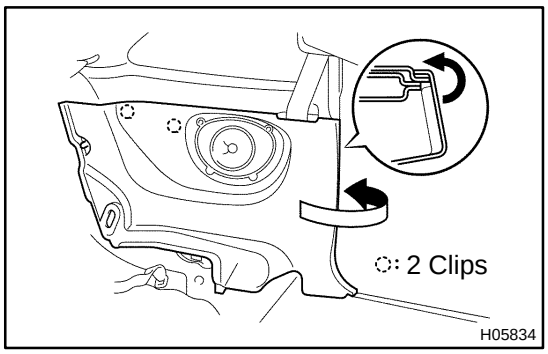

(c) Using a screwdriver, remove the quarter trim panel.

HINT:

Tape the screwdriver tip before use.

3. REMOVE ROOF SIDE INNER GARNISH

(a) Remove the front seat outer belt shoulder anchor bolt.

(b) Remove the rear seat outer belt floor anchor bolt.

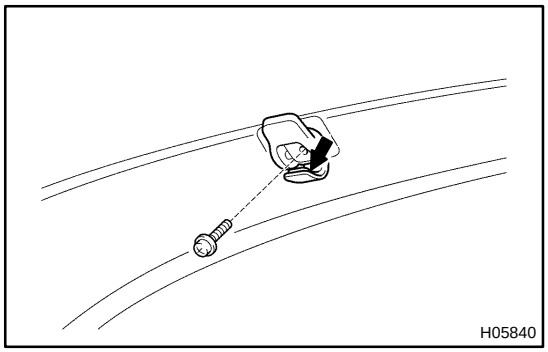

(c) Remove the screw and coat hook.

(d) Remove the clip.

(e) Using a screwdriver, pull up the roof side inner garnish.

HINT:

Tape the screwdriver tip before use.

(f) Remove the rear seat outer belt through the roof side inner garnish, then remove the roof side inner garnish.

4. REMOVE ROOF SIDE RAIL WEATHERSTRIP

(a) Using the clip remover, remove the 3 clips from the rear side of the weatherstrip.

(b) Remove the rear side of the weatherstrip from the retainer.

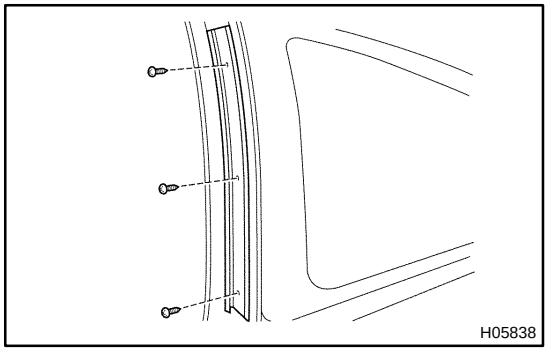

5. REMOVE ROOF SIDE RAIL WEATHERSTRIP RETAINER

Remove the 3 screws and roof side rail weatherstrip retainer.

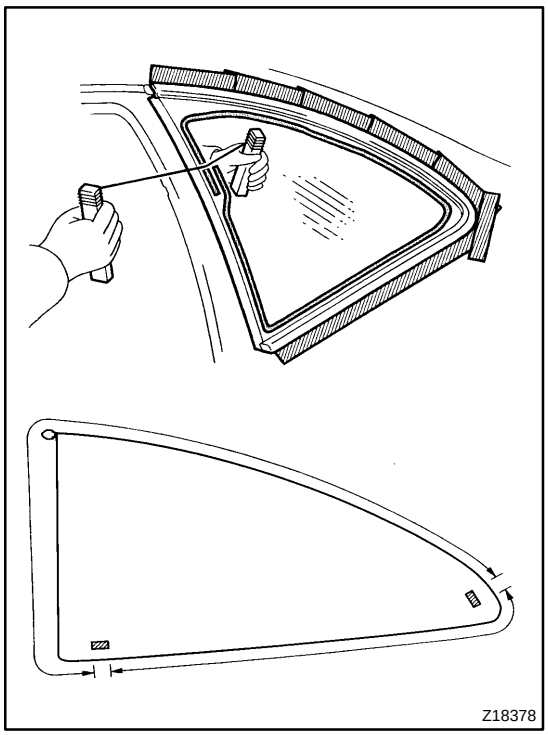

6. REMOVE QUARTER WINDOW GLASS

(a) Push piano wire through from the interior.

(b) Tie both wire ends to a wooden block or similar object.

HINT:

Apply adhesive tape to the outer surface to keep the surface from being scratched.

NOTICE:

When separating the glass, take care not to damage the paint and exterior.

(c) Cut the adhesive by pulling the piano wire around it.

HINT:

Cut the adhesive areas, as shown in the illustration, leaving the adhesive where the pins are.

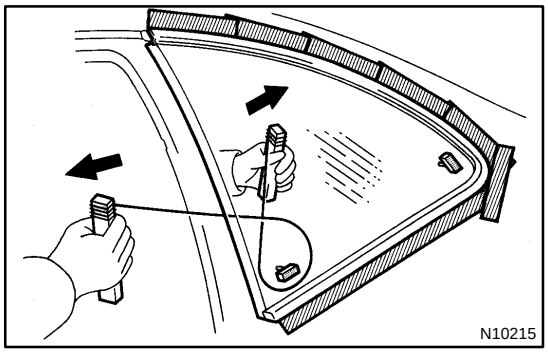

(d) Using piano wire, as shown in the illustration, cut off the adhered part to the pins.

(e) Remove the glass.

NOTICE:

Leave as much of the adhesive on the body as possible when cutting off the glass.

LU07Z-03

REMOVAL

HINT:

When repairing the oil pump, the oil pan and strainer should be removed and cleaned.

1. DRAIN ENGINE OIL

2. REMOVE ENGINE UNDER COVERS

3. REMOVE FRONT EXHAUST PIPE
(See page EM-72)

4. REMOVE ENGINE MOUNTING CENTER MEMBER
(See page EM-72)

5. REMOVE TWC (FRONT)

(a) Disconnect the oxygen sensor (bank 1 sensor 2) connector.

(b) Remove the 2 bolts, 2 nuts and RH exhaust manifold stay.

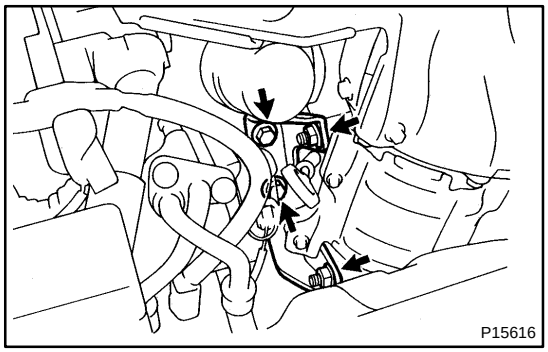

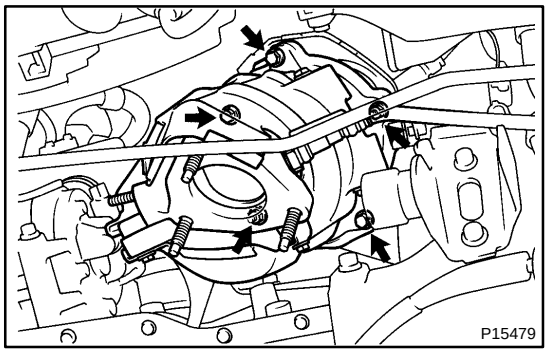

(c) Remove the 3 bolts, 2 nuts, TWC, gasket, retainer and cushion.

6. REMOVE REAR END PLATE STIFFENER

(a) Remove the bolt, nut and intake manifold stay.

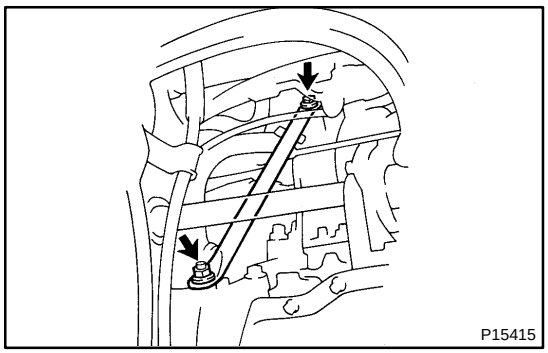

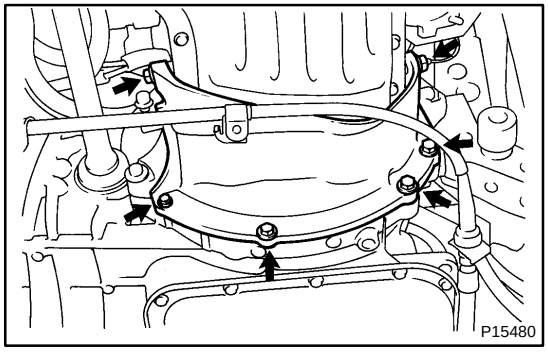

(b) Remove the 6 bolts and plate stiffener.

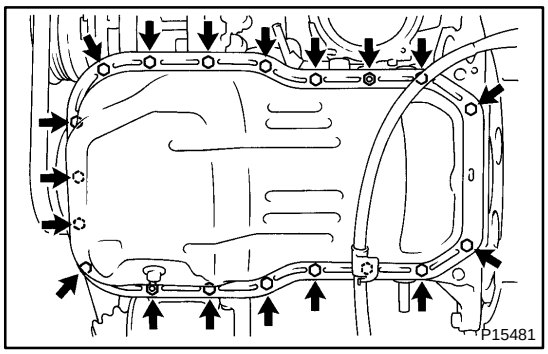

7. REMOVE OIL PAN

(a) Remove the oil dipstick.

(b) Remove the 17 bolts and 2 nuts.

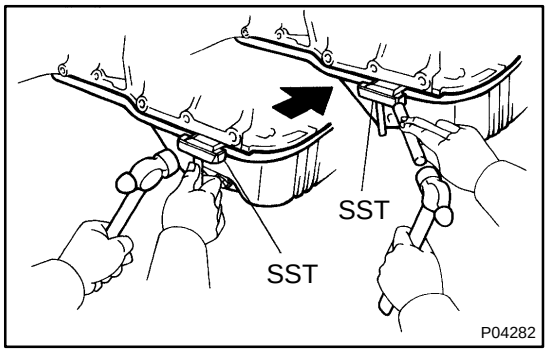

(c) Insert the blade of SST between the cylinder block and oil pan, and cut off applied sealer and remove the oil pan.
SST 09032-00100

NOTICE:

- **Do not use SST for the oil pump body side and rear oil seal retainer.**
- **Be careful not to damage the oil pan flange.**

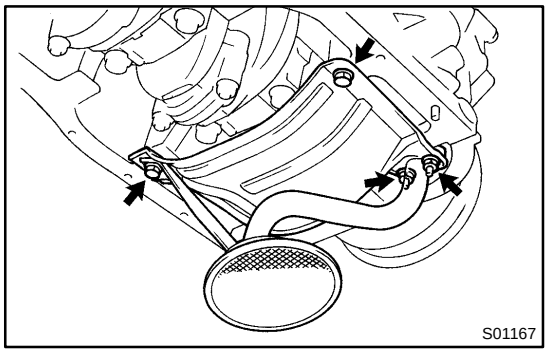

8. REMOVE OIL STRAINER AND OIL PAN BAFFLE PLATE

Remove the 2 bolts, 2 nuts, oil strainer, baffle plate and gasket.

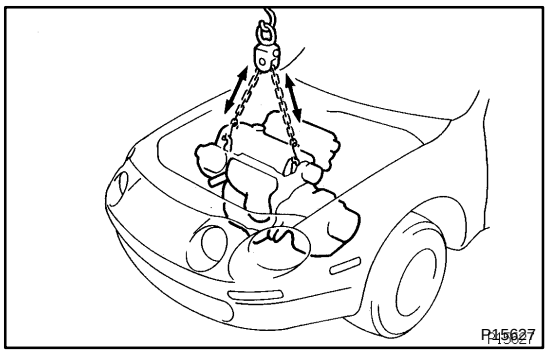

9. SUSPEND ENGINE WITH ENGINE SLING DEVICE

10. REMOVE TIMING BELT
(See page EM-13)

11. REMOVE NO.2 IDLER PULLEY

Remove the bolt and idler pulley.

12. REMOVE CRANKSHAFT TIMING PULLEY
(See page EM-13)

13. REMOVE OIL PUMP PULLEY
(See page EM-13)

14. REMOVE OIL PUMP

Remove the 12 bolts, oil pump and gasket.

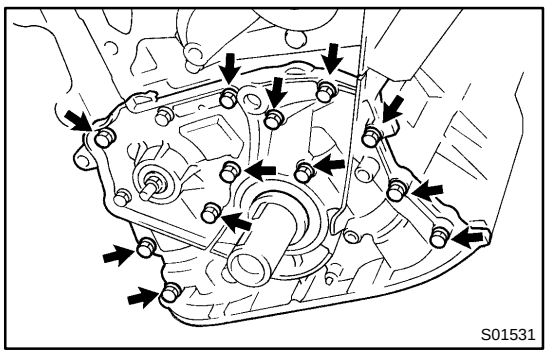

SF0W8-04

REMOVAL

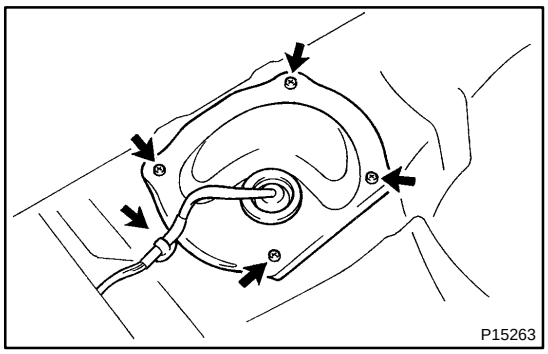

CAUTION:

Do not smoke or work near an open flame when working on the fuel pump.

1. REMOVE REAR SEAT CUSHION

2. REMOVE SERVICE HOLE COVER

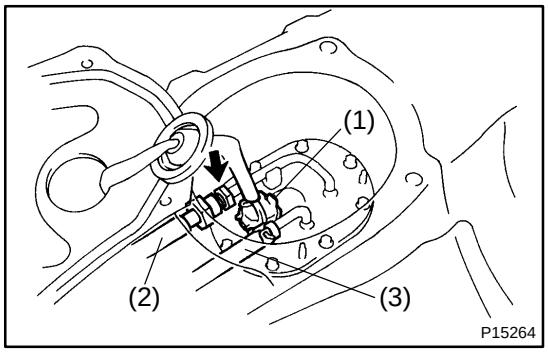

3. REMOVE FUEL PUMP AND SENDER GAUGE ASSEMBLY

(a) Disconnect the following connector, pipe and hose:

(1) Fuel pump & sender gauge connector

(2) Fuel outlet pipe

HINT:

At the time of installation, use SST.

SST 09631-22020

Torque: 24 N·m (240 kgf·cm, 17 ft·lbf)

(3) Fuel return hose

HINT:

At the time of installation, check fuel leaks.

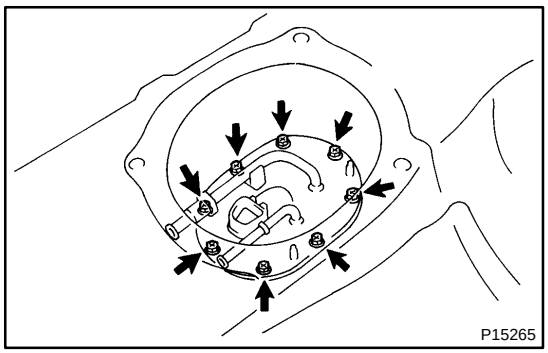

(b) Remove the 8 bolts.

Torque: 3.5 N·m (35 kgf·cm, 31 in.·lbf)

(c) Remove the fuel pump, sender gauge assembly and gasket.

HINT:

At the time of installation, use a new gasket.

SST 09631-22020

SR16W-02

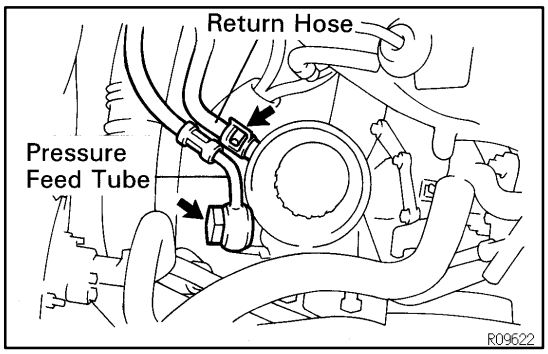

REMOVAL

1. REMOVE ENGINE UNDER COVER RH

Remove the 9 bolts.

2. DISCONNECT RETURN HOSE

NOTICE:

Take care not to spill fluid on the drive belt.

3. DISCONNECT PRESSURE FEED TUBE

Remove the union bolt and gasket.

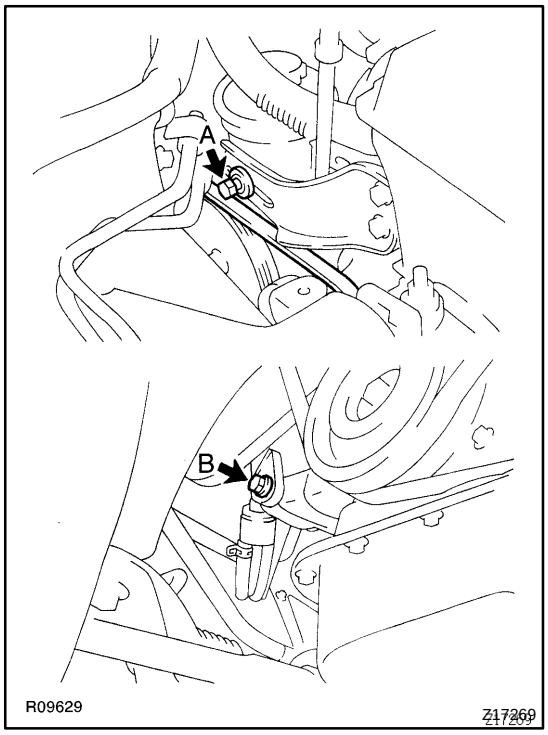

4. REMOVE DRIVE BELT

Remove bolt A and loosen bolt B.

5. DISCONNECT 2 VACUUM HOSES

6. REMOVE PS VANE PUMP ASSEMBLY WITH PUMP BRACKET

(a) Remove the 4 pump bracket set bolts.

(b) Remove the bolt and bracket from the pump assembly.

SA13R-01

REMOVAL

1. REMOVE EXHAUST TAILPIPE

(a) Remove the 2 bolts and disconnect exhaust tailpipe.
Torque: 43 N·m (440 kgf·cm, 32 ft·lbf)

(b) Remove the gasket.

2. REMOVE RH FUEL TANK BAND

Remove the bolt and disconnect the RH fuel tank band.
Torque: 40 N·m (400 kgf·cm, 30 ft·lbf)

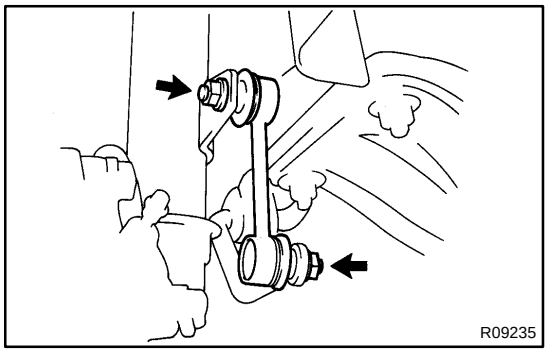

3. REMOVE BOTH STABILIZER BAR LINKS

Remove the 4 nuts and 2 stabilizer bar links.

HINT:

If the ball joint turns together with the nut, use a 5 mm hexagon wrench to hold the stud.
Torque: 44 N·m (450 kgf·cm, 33 ft·lbf)

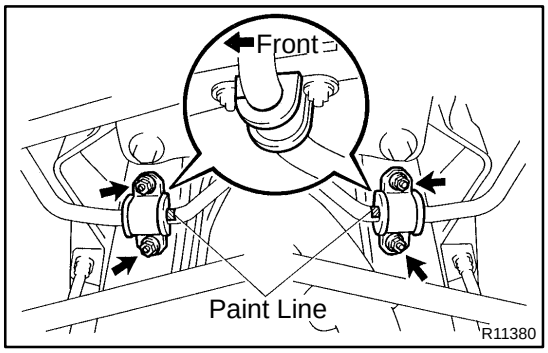

4. REMOVE STABILIZER BAR

(a) Remove the 4 nuts and stabilizer bar from the body.
Torque: 19 N·m (195 kgf·cm, 14 ft·lbf)

(b) Remove the 2 brackets and bushings from the stabilizer bar.

HINT:

At the time of installation, please refer to the following items.

- Install the bushing to the outside of the paint line.
- Install the bushing to the stabilizer bar so that the cutout of the bushings faces to the front of the vehicle, as shown.

(c) Remove the stabilizer bar.

AC2ST-01

REMOVAL

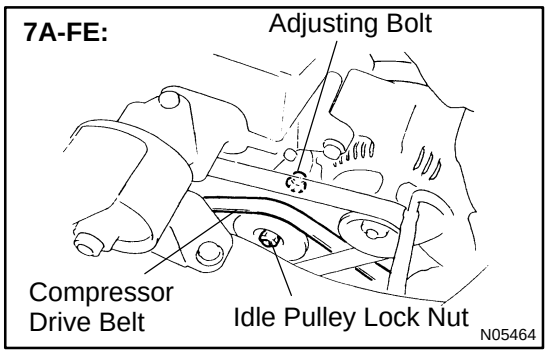

1. 7A-FE:

REMOVE DRIVE BELT

(a) Remove the alternator drive belt.
(b) Loosen the idle pulley lock nut.
(c) Loosen the adjusting bolt and remove the compressor drive belt.

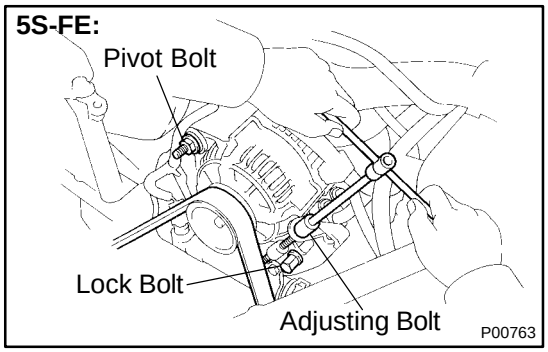

2. 5S-FE:

REMOVE DRIVE BELT

(a) Loosen the pivot bolt.
(b) Loosen the adjusting lock bolt.
(c) Loosen the adjusting bolt.
(d) Remove the drive belt.

IG08B-03

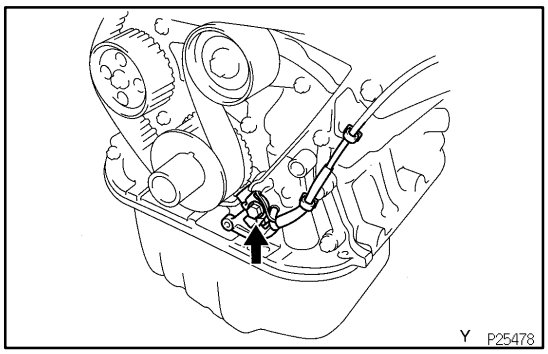

REMOVAL

1. REMOVE NO.1 TIMING BELT COVER
(See page EM-13)

2. REMOVE CRANKSHAFT POSITION SENSOR

(a) Disconnect the sensor connector.

(b) Disconnect the sensor connector from the generator drive belt adjusting bar.

(c) Remove the bolt and sensor.

EM0J8-03

REMOVAL

1. REMOVE RH ENGINE UNDER COVER

2. DRAIN ENGINE COOLANT

3. REMOVE AIR CLEANER CAP AND CASE
(See page EM-72)

4. REMOVE DISTRIBUTOR
(See page IG-9)

5. REMOVE GENERATOR
(See page CH-7)

6. REMOVE FRONT EXHAUST PIPE
(See page EM-72)

7. REMOVE EXHAUST MANIFOLD AND FRONT TWC ASSEMBLY

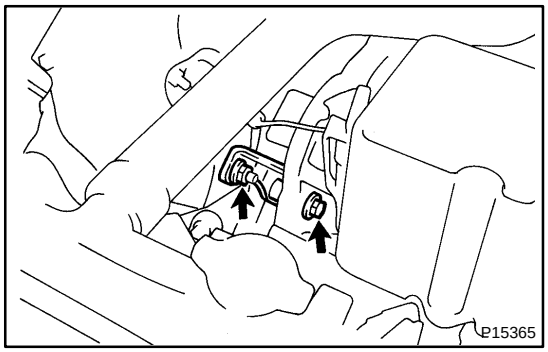

(a) Disconnect these connectors:
- Oxygen sensor (bank 1 sensor 1) connector
- Oxygen sensor (bank 1 sensor 2) connector

(b) Remove the bolt, nut and LH exhaust manifold stay.

(c) Remove the 5 bolts and manifold upper heat insulator.

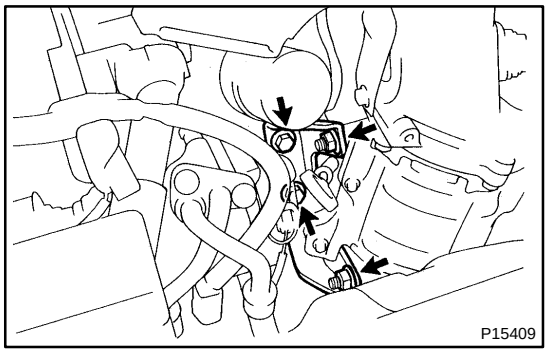

(d) Remove the 2 bolts, 2 nuts and RH exhaust manifold stay.

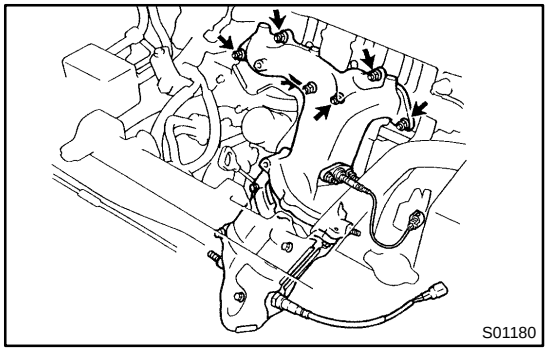

(e) Remove the 6 nuts, the exhaust manifold and TWC assembly.

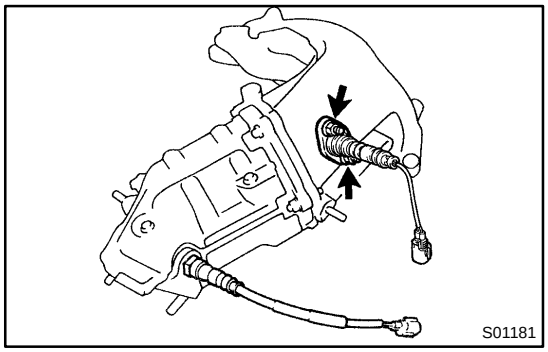

8. REMOVE OXYGEN SENSOR (BANK 1 SENSOR 1) FROM EXHAUST MANIFOLD

Remove the 2 nuts, oxygen sensor and gasket.

9. REMOVE OXYGEN SENSOR (BANK 1 SENSOR 2) FROM FRONT TWC

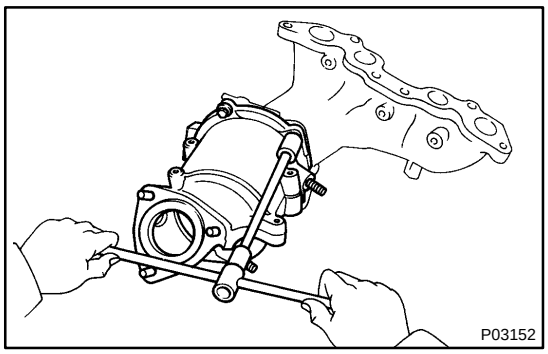

10. SEPARATE EXHAUST MANIFOLD AND FRONT TWC

(a) Remove the 5 bolts and lower manifold heat insulator.

(b) Remove the 8 bolts and 2 TWC heat insulators.

(c) Remove the 3 bolts, 2 nuts, TWC, gasket, retainer and cushion.

11. DISCONNECT OIL PRESSURE SWITCH CONNECTOR

12. REMOVE WATER OUTLET

(a) Disconnect these connectors:

- ECT sensor connector
- ECT sender gauge connector

(b) Disconnect these hoses from the water outlet:

(1) Radiator hose
(2) Water bypass pipe hose
(3) Heater water hose
(4) Vacuum hose (from P port of throttle body) from upper port of TVV for EVAP
(5) Vacuum hose (from charcoal canister) from lower port of TVV for EVAP
(6) IAC valve water bypass hose

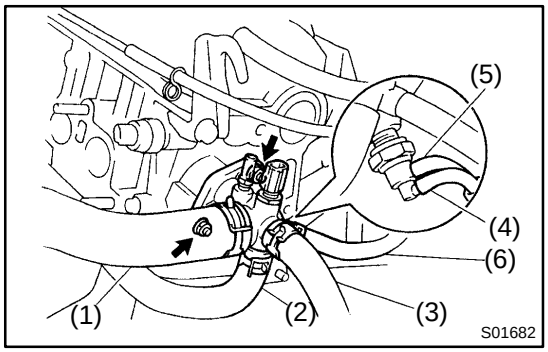

(c) Remove the 2 nuts, water outlet and gasket.

13. REMOVE WATER BYPASS PIPE

(a) Remove the bolt, 2 nuts and oil cooler heat protector.

(b) Disconnect these hoses:

(1) IAC valve water bypass hose from water bypass pipe
(2) Heater water hose from water bypass pipe
(3) 2 oil cooler water bypass hoses from oil cooler

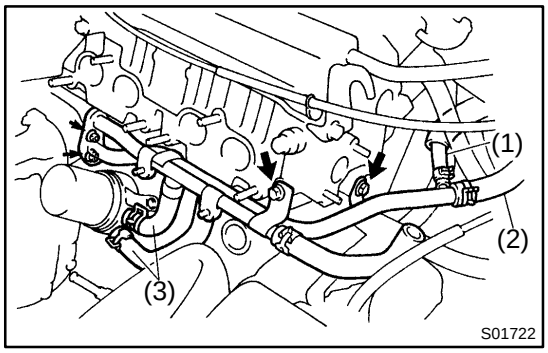

(c) Remove the 2 bolts and 2 nuts.

(d) Disconnect the water bypass pipe from the water pump cover, and remove the water bypass pipe.

(e) Remove the gasket and O-ring.

14. REMOVE THROTTLE BODY

(See page SF-34)

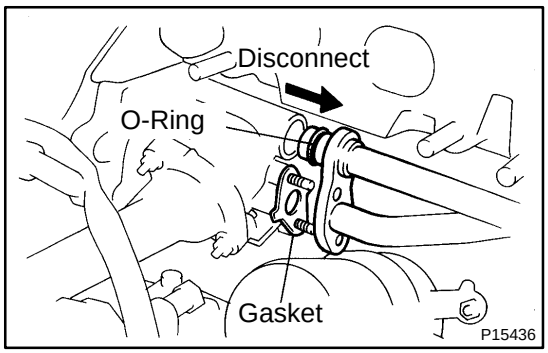

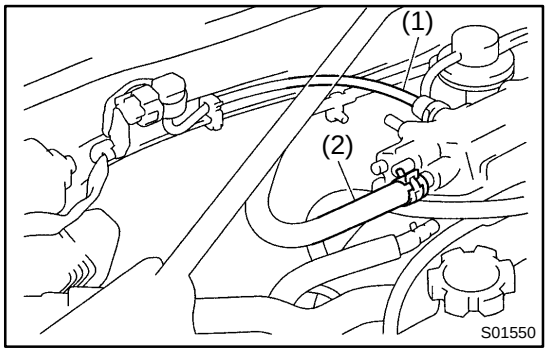

15. DISCONNECT HOSES

Disconnect these hoses:

(1) MAP sensor vacuum hose from gas filter on manifold
(2) Brake booster vacuum hose from intake manifold

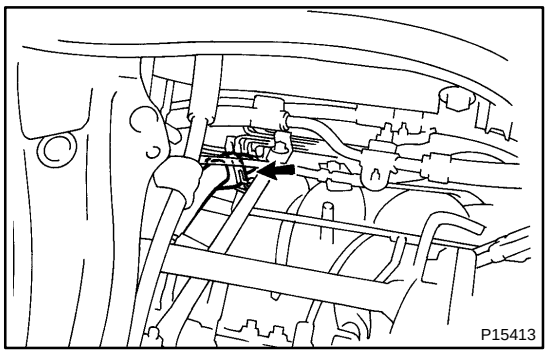

16. REMOVE EGR VALVE AND VACUUM MODULATOR

(a) Disconnect the EVAP hose from the charcoal canister.

(b) Disconnect the hose clamp from the bracket on the air tube.

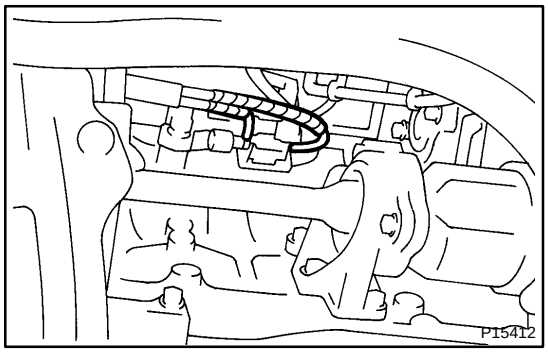

(c) Disconnect the 2 vacuum hoses from the VSV for the EGR.

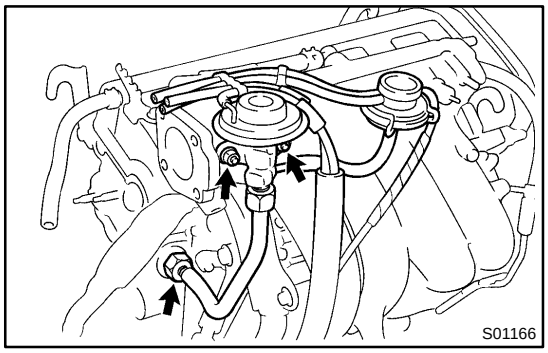

(d) Disconnect the vacuum modulator from the clamp on the intake manifold.

(e) Loosen the union nut of the EGR pipe, and remove 2 nuts, the EGR valve, vacuum modulator, vacuum hoses assembly and gasket.

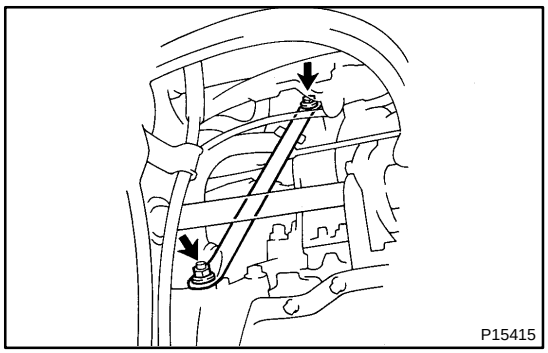

17. REMOVE INTAKE MANIFOLD STAY

Remove the bolt, nut and intake manifold stay.

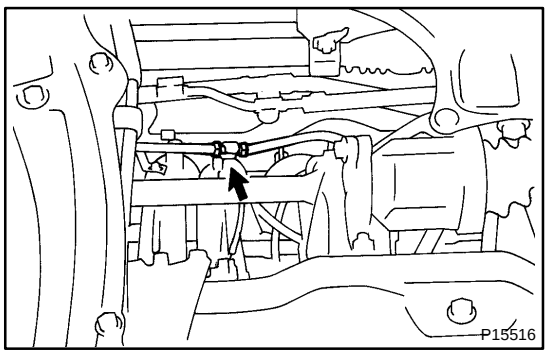

18. DISCONNECT A/T THROTTLE CONTROL CABLE FROM INTAKE MANIFOLD

Disconnect the control cable from the clamp on the rear side of the intake manifold.

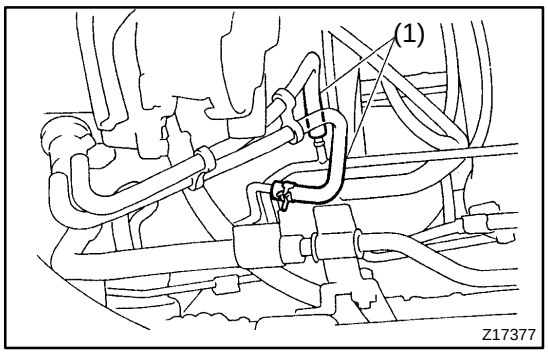

19. REMOVE AIR TUBE

(a) Disconnect these hoses:
  (1) 2 PS air hoses from air tube

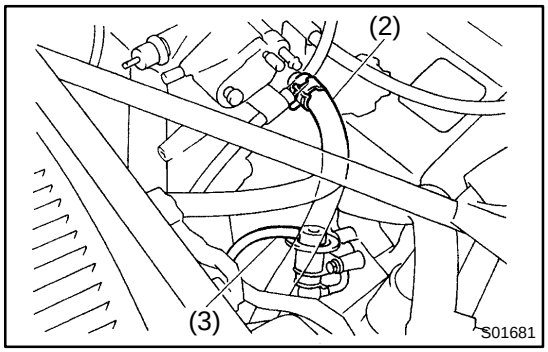

  (2) PS air hose from intake manifold
  (3) Air hose from fuel pressure regulator

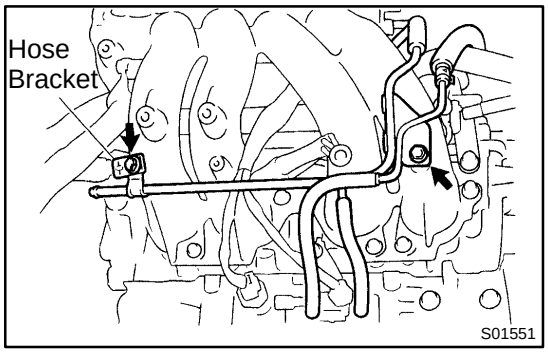

(b) Remove the 2 bolts, hose bracket (for EGR) and air tube.

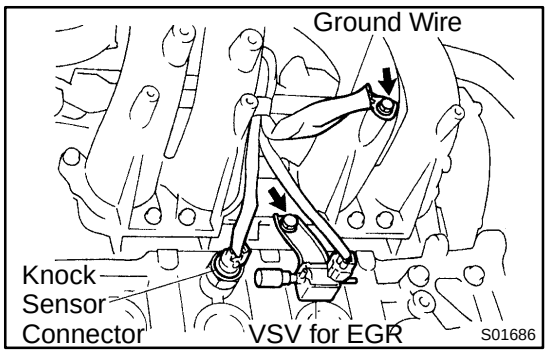

20. DISCONNECT KNOCK SENSOR 1 CONNECTOR

21. DISCONNECT GROUND WIRES

Remove bolt, and disconnect the 2 ground wires from the intake manifold.

22. REMOVE VSV FOR EGR

(a) Disconnect the VSV connector.

(b) Remove the bolt and VSV.

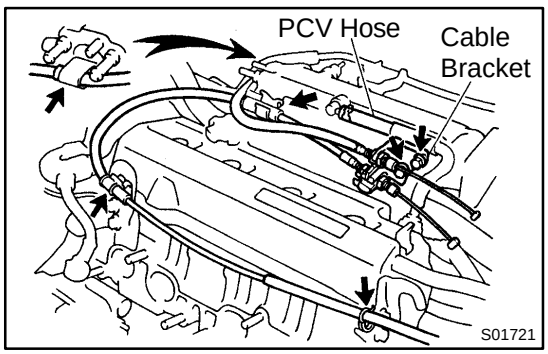

23. DISCONNECT PCV HOSE FROM INTAKE MANIFOLD

24. DISCONNECT ACCELERATOR, A/T THROTTLE CONTROL CABLES AND BRACKET FROM INTAKE MANIFOLD AND CLAMPS

(a) Remove the 2 bolts, and disconnect cable bracket from the intake manifold.

(b) Disconnect the control cables from the 4 clamps.

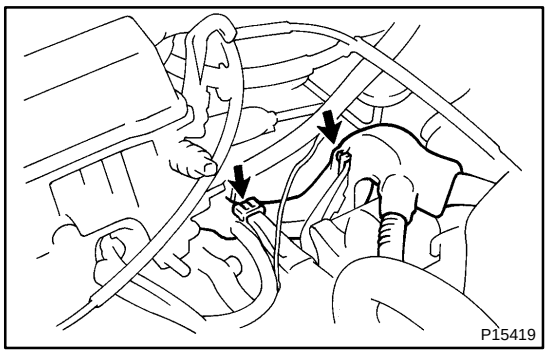

25. DISCONNECT ENGINE WIRE

(a) Disconnect the the engine wire protector from the bracket on the starter.

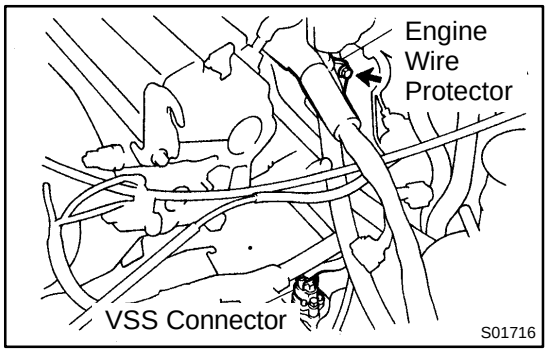

(b) Disconnect the VSS sensor connector.
(c) Remove the bolt, and disconnect the the engine wire protector from the LH side of the intake manifold.
(d) Disconnect the 4 injector connectors.

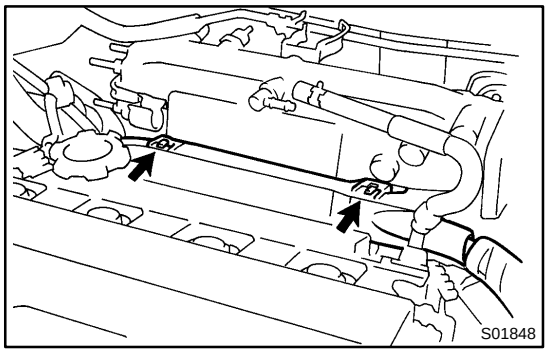

(e) Disconnect the engine wire protector from the 2 brackets on the front side of the intake manifold.

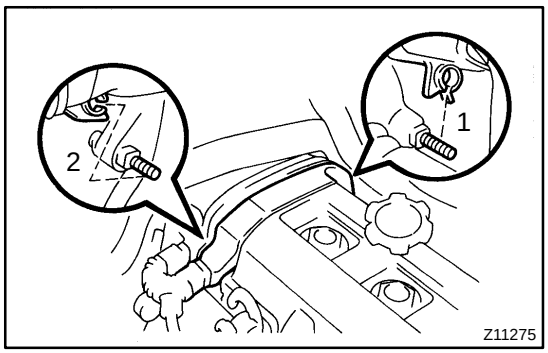

(f) Disconnect the engine wire protector from the 2 mounting bolts of the No.2 timing belt cover in the sequence shown.

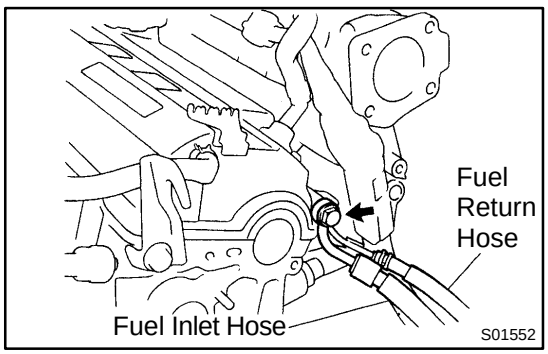

26. DISCONNECT FUEL INLET HOSE FROM DELIVERY PIPE

Remove the union bolt and 2 gaskets, and disconnect the inlet hose from the delivery pipe.

27. DISCONNECT FUEL RETURN HOSE FROM RETURN PIPE

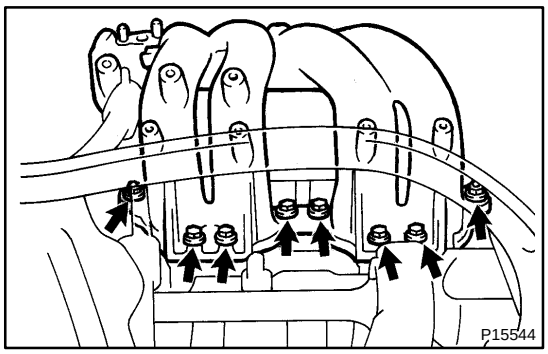

28. REMOVE INTAKE MANIFOLD

(a) Remove the 6 bolts and 2 nuts.

(b) Disconnect the engine wire between the intake maniold and cylinder head.

(c) Remove the intake manifold and gasket.

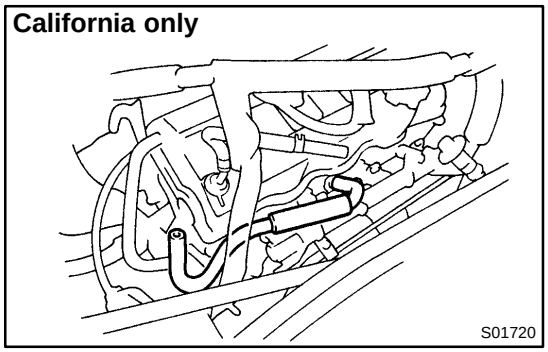

29. California only:
REMOVE AIR HOSE FOR AIR ASSIST SYSTEM

Disconnect the air hose from the cylinder head port, and remove the air hose.

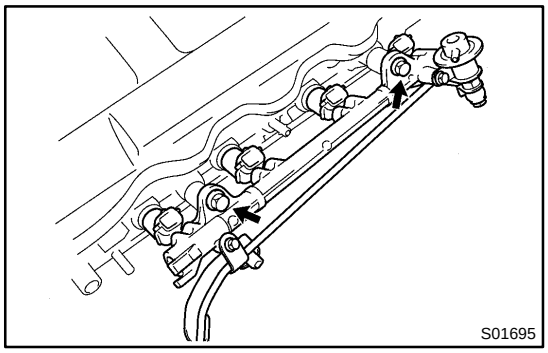

30. REMOVE DELIVERY PIPE AND INJECTORS

(a) Remove the 2 bolts and delivery pipe together with the 4 injectors.

NOTICE:
Be careful not to drop the injectors when removing the delivery pipe.

(b) Remove the 4 insulators (except California) and 2 spacers from the cylinder head.

(c) Pull out the 4 injectors from the delivery pipe.

(d) California:
Remove the 2 O-rings, insulator and grommet from each injector.

(e) Except California:
Remove the O-ring and grommet from each injector.

31. DISCONNECT TIMING BELT FROM CAMSHAFT TIMING PULLEY (See page EM-13)

32. REMOVE CAMSHAFT TIMING PULLEY (See page EM-13)

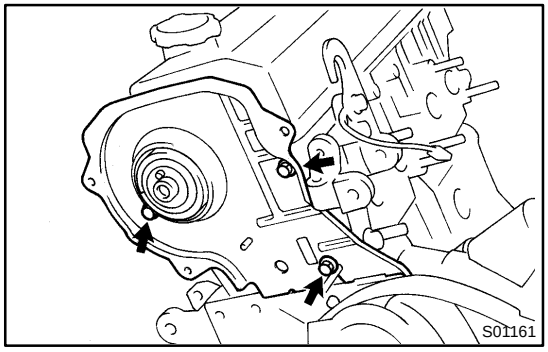

33. REMOVE NO.1 IDLER PULLEY AND TENSION SPRING

Remove the bolt, pulley and tension spring.

34. REMOVE NO.3 TIMING BELT COVER

Remove the 3 bolts and timing and cover.

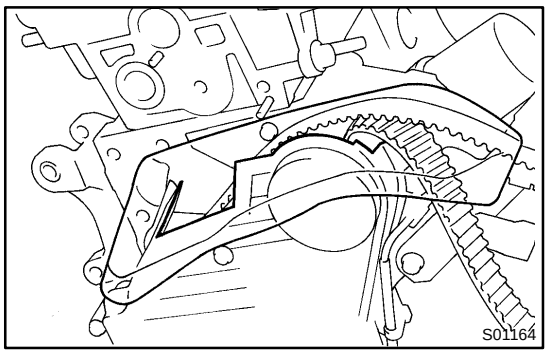

NOTICE:

- **Support the timing belt, so the meshing of the crankshaft timing pulley and timing belt does not shift.**
- **Be careful not to drop anything inside the timing belt cover.**
- **Do not allow the belt to come into contact with oil, water or dust.**

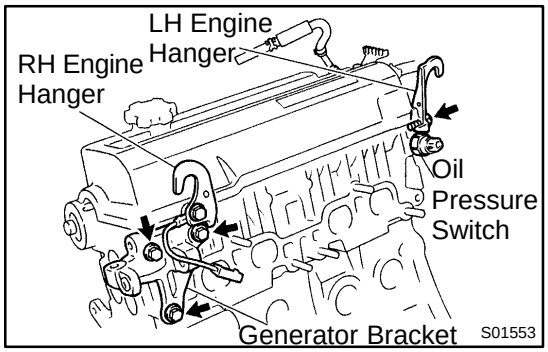

35. REMOVE ENGINE HANGERS AND GENERATOR BRACKET

(a) Remove the 3 bolts, the generator bracket and RH engine hanger assembly.

(b) Remove the bolt and LH engine hanger.

36. REMOVE OIL PRESSURE SWITCH

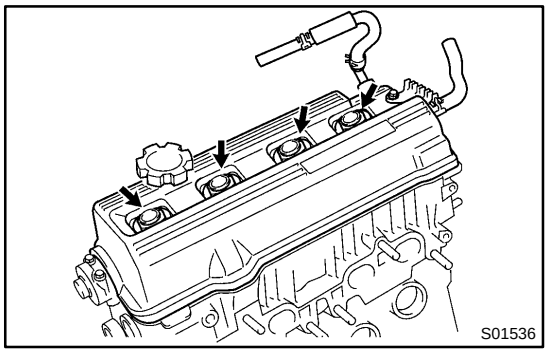

37. REMOVE CYLINDER HEAD COVER

Remove the 4 nuts, grommets, head cover and gasket.

HINT:

Arrange the grommets in the correct order, so that they can be reinstalled into their original positions. This minimizes any possibility of oil leakage due to reuse of the grommets in different positions.

38. REMOVE HIGH-TENSION CORD CLAMP, PCV VALVE AND HOSES FROM CYLINDER HEAD COVER

(a) Remove the bolt and high-tension cord clamp.

(b) Remove the PCV valve, hose assembly and grommet.

(c) Remove the PCV hose.

39. REMOVE CAMSHAFTS

NOTICE:

Since the thrust clearance of the camshaft is small, the camshaft must be kept level while it is being removed. If the camshaft is not kept level, the portion of the cylinder head receiving the shaft thrust may crack or be damaged, causing the camshaft to seize or break. To avoid this, the following steps should be carried out.

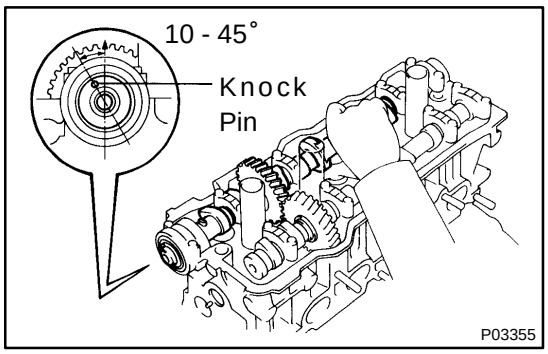

(a) Remove the exhaust camshaft.

(1) Set the knock pin of the intake camshaft at 10 - 45° BTDC of camshaft angle.

HINT:

The above angle allows No.2 and No.4 cylinder cam lobes of the exhaust camshaft to push their valve lifters evenly.

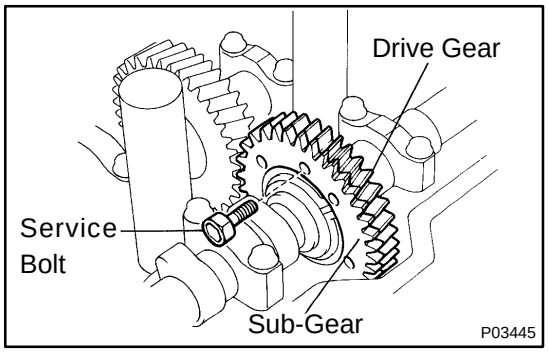

(2) Secure the exhaust camshaft sub-gear to drive gear with a service bolt.

Recommended service bolt:

Thread diameter	6 mm
Thread pitch	1.0 mm
Bolt length	16 - 20 mm (0.63 - 0.79 in.)

HINT:

When removing the camshaft, make sure that the torsional spring force of the sub-gear has been eliminated by the above operation.

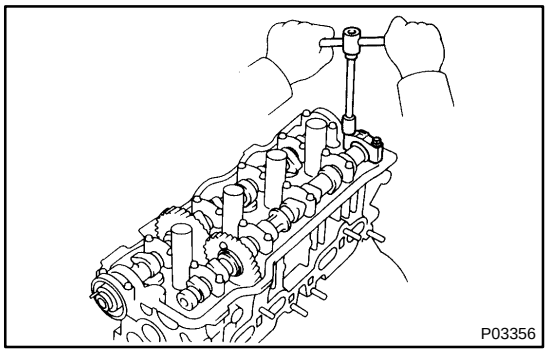

(3) Remove the 2 bolts and rear bearing cap.

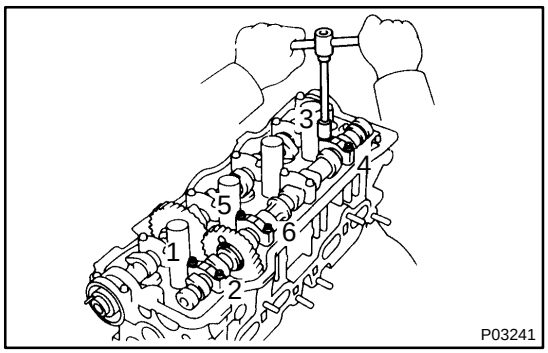

(4) Uniformly loosen and remove the 6 bolts on the No.1, No.2 and No.4 bearing caps in several passes, in the sequence shown.

NOTICE:

Do not remove the No.3 bearing cap bolts at this stage.

(5) Remove the No.1, No.2 and No.4 bearing caps.

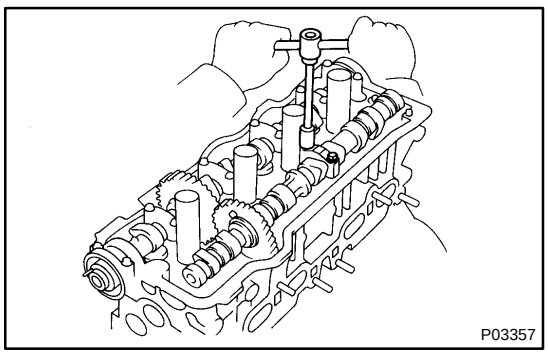

(6) Alternately loosen and remove the 2 bolts on the No.3 bearing cap.

HINT:

- As the 2 No.3 bearing cap bolts are loosened, make sure that the camshaft is lifted out straight and level.
- If the camshaft is not being lifted out straight and level, re-tighten the 2 No.3 bearing cap bolts. Then reverse the order of above steps from (f) to (a) and reset the knock pin of the intake camshaft at 10 - 45° BTDC, and repeat steps from (b) to (f) once again.

NOTICE:
Do not pry on or attempt to force the camshaft with a tool or other object.

(7) Remove the No.3 bearing cap and exhaust camshaft.

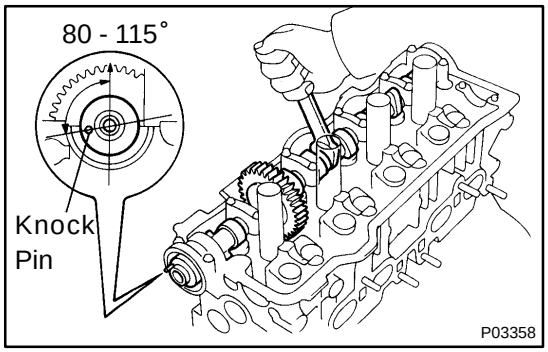

(b) Remove the intake camshaft.

(1) Set the knock pin of the intake camshaft at 80 - 115° BTDC of camshaft angle.

HINT:
The above angle allows the No.1 and No.3 cylinder cam lobes of intake camshaft to push their valve lifters evenly.

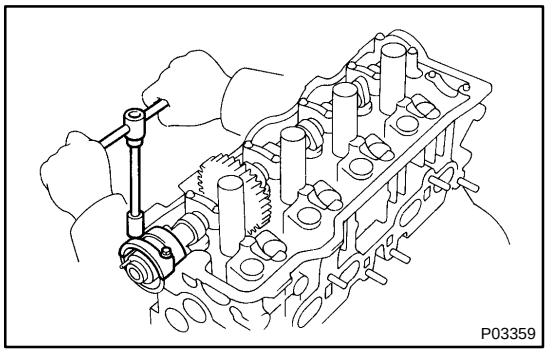

(2) Remove the 2 bolts, front bearing cap and oil seal.

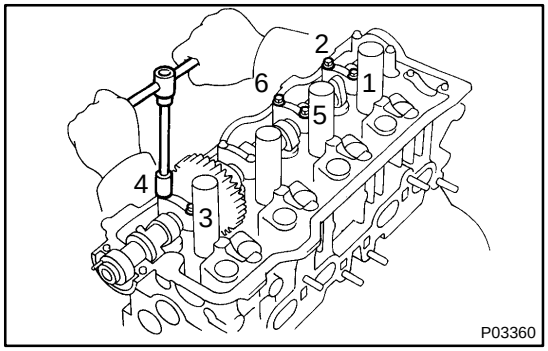

(3) Uniformly loosen and remove the 6 bolts on the No.1, No.3 and No.4 bearing caps in several passes, in the sequence shown.

NOTICE:
Do not remove the No.2 bearing cap bolts at this stage.

(4) Remove the No.1, No.3 and No.4 bearing caps.

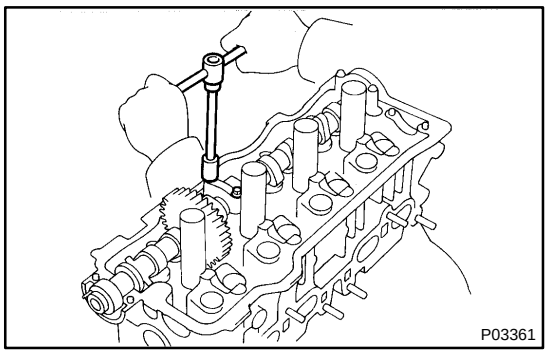

(5) Alternately loosen and remove the 2 bolts on the No.2 bearing cap.

HINT:

- As the 2 No.2 bearing cap bolts are loosened, make sure that the camshaft is lifted out straight and level, after breaking adhesion on the front bearing cap.
- If the camshaft is not being lifted out straight and level, re-tighten the 2 No.2 bearing cap bolts. Reverse the order of above steps from (e) to (a) and reset the knock pin of the intake camshaft at 80 - 115° BTDC, and repeat steps from (b) to (e) once again.

NOTICE:

Do not pry on or attempt to force the camshaft with a tool or other object.

(6) Remove the No.2 bearing cap and camshaft.

40. DISASSEMBLE EXHAUST CAMSHAFT

(a) Mount the camshaft in a vise.

NOTICE:

Be careful not to damage the camshaft.

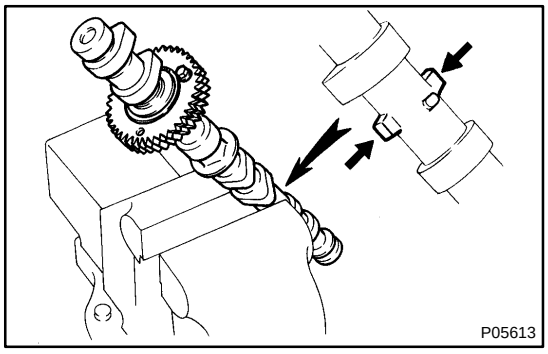

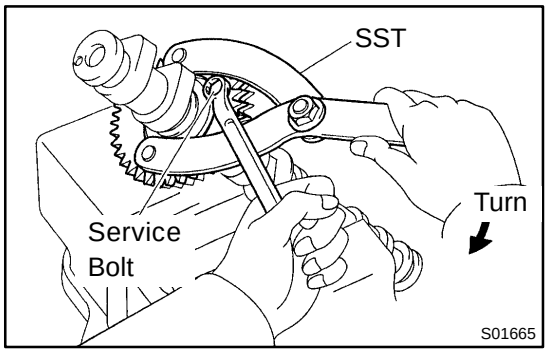

(b) Using SST, turn the sub-gear clockwise, and remove the service bolt.

SST 09960-10010 (09962-01000, 09963-00500)

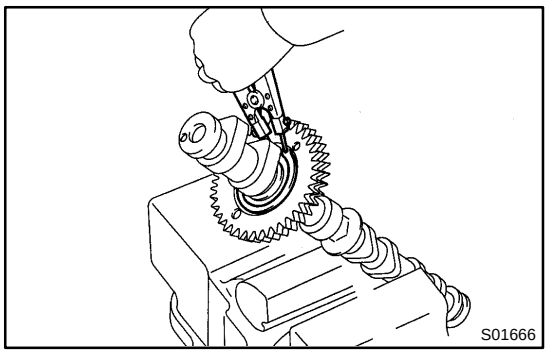

(c) Using snap ring pliers, remove the snap ring.

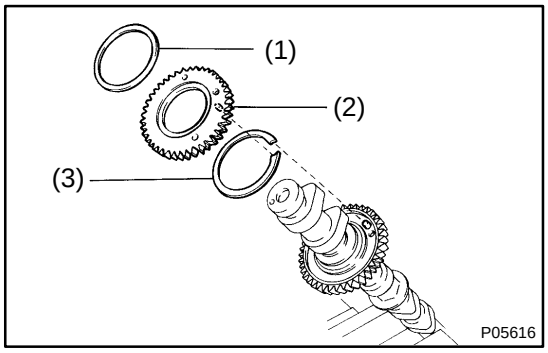

(d) Remove these parts:

(1) Wave washer
(2) Camshaft sub-gear
(3) Camshaft gear spring

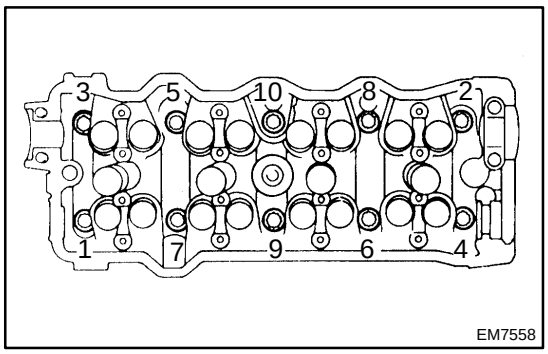

41. REMOVE CYLINDER HEAD

(a) Uniformly loosen and remove the 10 cylinder head bolts in several passes, in the sequence shown.

NOTICE:

Cylinder head warpage or cracking could result from removing bolts in incorrect order.

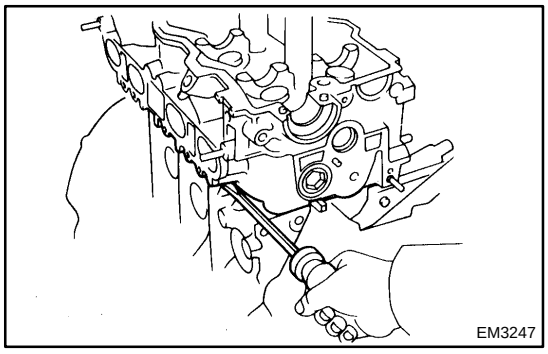

(b) Lift the cylinder head from the dowels on the cylinder block, and place the cylinder head on wooden blocks on a bench.

HINT:

If the cylinder head is off, pry between the cylinder head and cylinder block with a screwdriver.

NOTICE:

Be careful not to damage the contact surfaces of the cylinder head and cylinder block.

IG085-02

REMOVAL

1. REMOVE AIR CLEANER CAP

2. DISCONNECT DISTRIBUTOR CONNECTOR

3. DISCONNECT HIGH-TENSION CORDS FROM SPARK PLUGS AND IGNITION COIL

(a) Disconnect the 4 high-tension cords from the clamp on the cylinder head cover.

(b) Disconnect the high-tension cords at the rubber boot. Do not pull on the high-tension cords.

NOTICE:

Pulling on or bending the cords may damage the conductor inside.

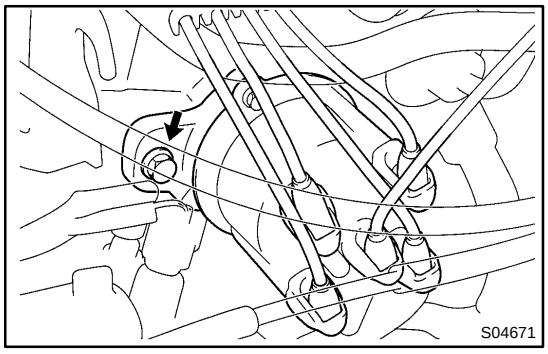

4. REMOVE DISTRIBUTOR WITH HIGH-TENSION CORDS

(a) Remove the bolt, and pull out the distributor.

(b) Remove the O-ring from the distributor housing.

CO18Z-01

REMOVAL

1. DRAIN ENGINE COOLANT

2. CANADA only:
DISCONNECT RELAY BOX (FOR DAYTIME RUNNING LIGHT SYSTEM) FROM RADIATOR

Remove the 2 bolts, and disconnect the relay box from the radiator.

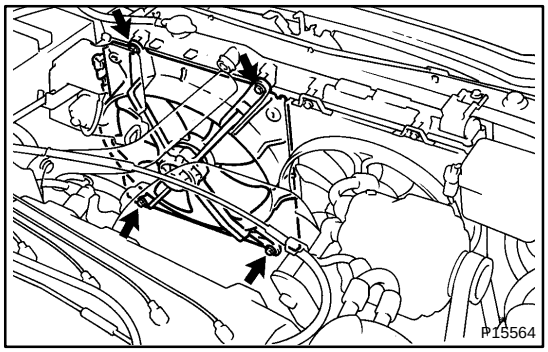

3. REMOVE NO. 1 COOLING FAN

(a) Disconnect the upper radiator hose from the radiator.
(b) Disconnect the cooling fan connector.
(c) Disconnect the wire from the clamp on the No. 1 cooling fan.
(d) Remove the 4 bolts and cooling fan.

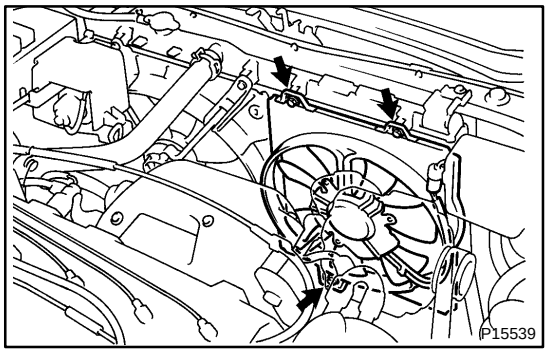

4. REMOVE NO. 2 COOLING FAN

(a) Disconnect the cooling fan connector.
(b) Remove the 3 bolts and cooling fan.

EM0JF-02

REMOVAL

1. **REMOVE BATTERY**
2. **REMOVE ENGINE HOOD**
3. **REMOVE ENGINE UNDER COVERS**
4. **DRAIN ENGINE COOLANT**
5. **DRAIN ENGINE OIL**
6. **DRAIN TRANSAXLE OIL**

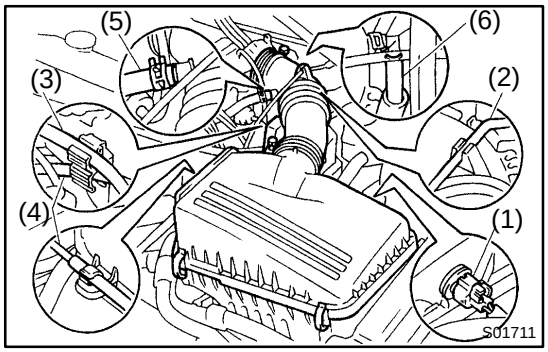

7. REMOVE AIR CLEANER CAP

(a) Disconnect the connector, cord, cables and hoses:
- (1) IAT sensor connector
- (2) High-tension cord from air cleaner hose
- (3) Accelerator cable from clamp
- (4) Cruise control actuator cable from clamps
- (5) PCV hose from air cleaner hose
- (6) California only:
  Air hose for idle-up from air cleaner hose

(b) Disconnect the 4 clamps, and disconnect the air cleaner cap from the air cleaner case.

(c) Loosen the hose clamp, and disconnect the air cleaner hose from the throttle body.

(d) Remove the air cleaner cap and air cleaner hose assembly.

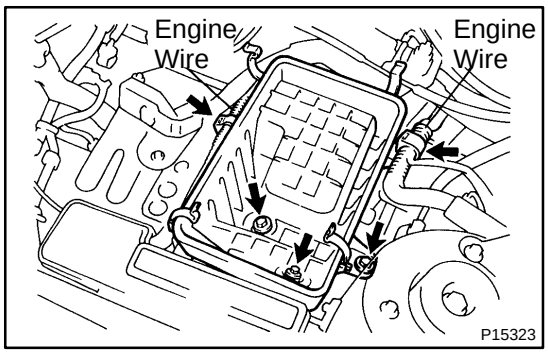

8. REMOVE AIR CLEANER CASE

(a) Remove the air filter.

(b) Disconnect the 2 engine wires from the clamps on the air cleaner case.

(c) Remove the 3 bolts and air cleaner case.

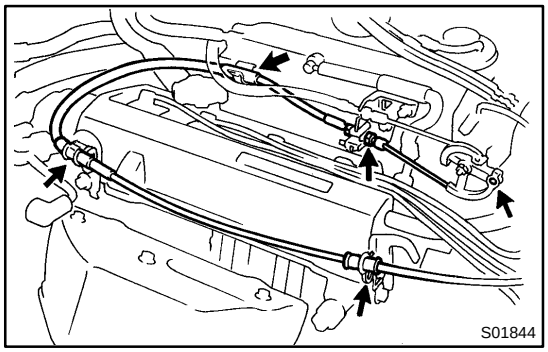

9. DISCONNECT ACCELERATOR CABLE FROM THROTTLE BODY, CABLE BRACKET AND CLAMPS

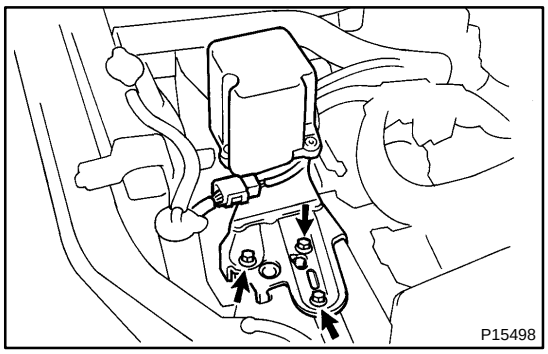

10. w/ Cruise Control System:
DISCONNECT CRUISE CONTROL ACTUATOR FROM BODY BRACKET

(a) Disconnect the actuator connector.

(b) Remove the 3 bolts, and disconnect the actuator from the body bracket.

11. REMOVE RADIATOR ASSEMBLY
(See page CO-18)

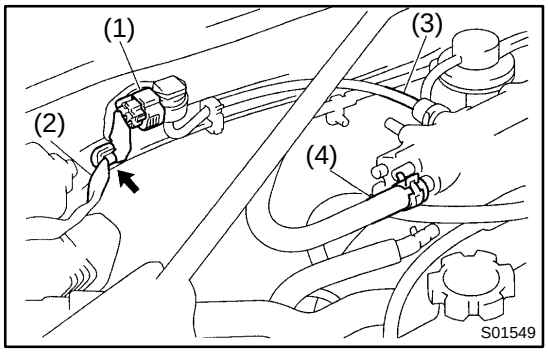

12. DISCONNECT CONNECTORS, WIRE, CABLE, CORD, STRAP AND HOSES

Disconnect the connectors, wire, cable, cord, strap and hoses:

(1) MAP sensor connector
(2) MAP sensor wire from clamp on bracket
(3) MAP sensor vacuum hose from gas filter on intake manifold
(4) Brake booster vacuum hose from intake manifold

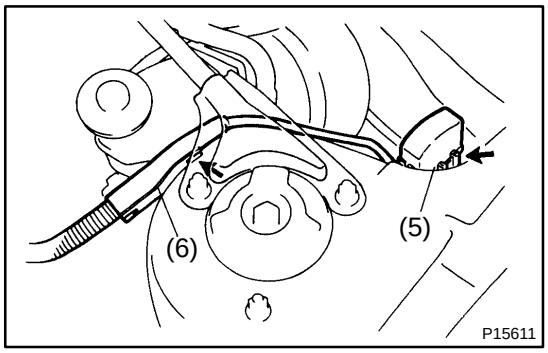

(5) DLC1 from bracket
(6) Engine wire protector from bracket

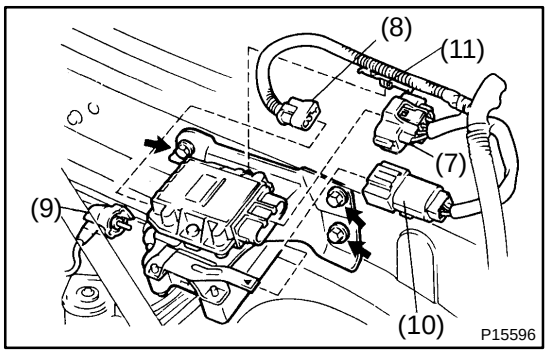

(7) Igniter connector
(8) Ignition coil connector
(9) High-tension cord from ignition coil
(10) Noise filter
(11) Engine wire clamp from bracket
Remove the 3 bolts, the ignition coil and igniter assembly, and disconnect the wire from the bracket.

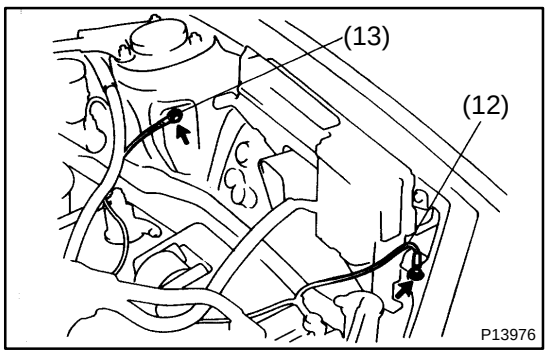

(12) Ground cable from body
(13) Ground strap from body

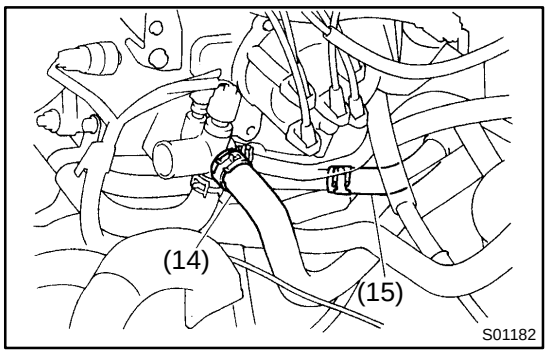

(14) Heater hose from water outlet
(15) Heater hose from water bypass pipe

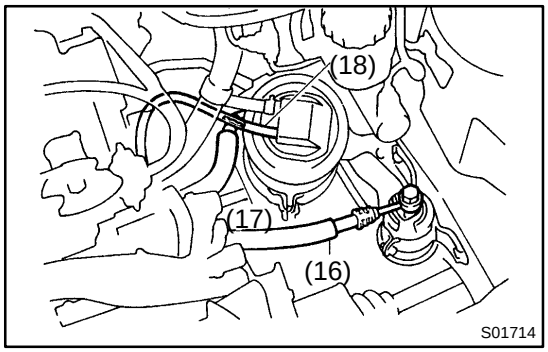

(16) Fuel inlet hose from fuel filter
(17) Fuel return hose from return pipe
(18) EVAP hose from charcoal canister

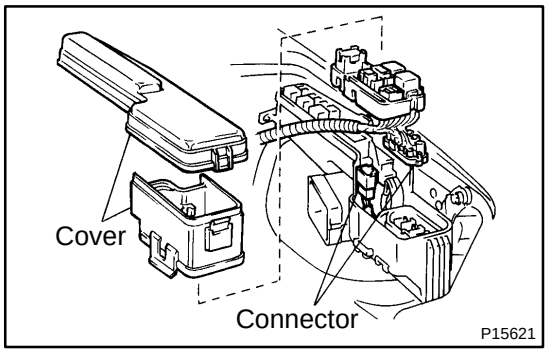

13. DISCONNECT ENGINE WIRE FROM ENGINE COMPARTMENT RELAY BOX

(a) Remove the 2 relay box covers.
(b) Disconnect the 2 connectors.

14. DISCONNECT ENGINE WIRE FROM CABIN

(a) Remove these parts:
- Scuff plate
- Cowl side trim
- Lower instrument panel finish panel

(b) Take out the front side of the floor carpet.
(c) Disconnect the wire and connectors:
(1) Engine wire from clamp on ECM bracket
(2) 3 ECM connectors
(3) Circuit opening relay connector
(4) 3 connectors from connectors on bracket
(5) A/C amplifier connector

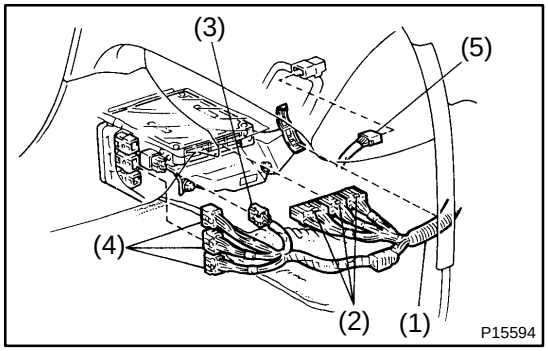

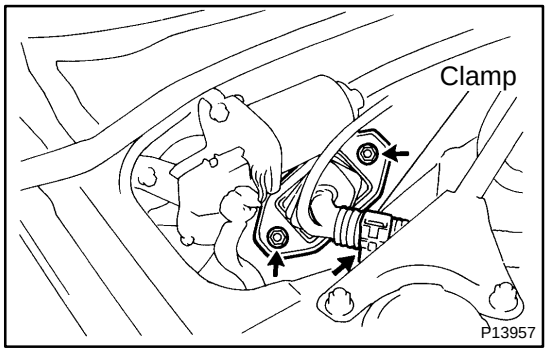

(d) Disconnect the wire clamp from the bracket.
(e) Remove the 2 nuts holding the engine wire retainer to the cowl panel.
(f) Pull out the engine wire from the cabin.



15. REMOVE FRONT EXHAUST PIPE

(a) Remove the 2 bolts holding the front exhaust pipe to the exhaust pipe support bracket.

(b) Remove the 2 bolts and 2 nuts holding the front exhaust pipe to the rear TWC.

(c) Using a 14 mm deep socket wrench, remove the 3 nuts holding the front exhaust pipe to the front TWC.

(d) Remove the front exhaust pipe and 2 gaskets.

16. REMOVE DRIVE SHAFTS (See page SA-26)

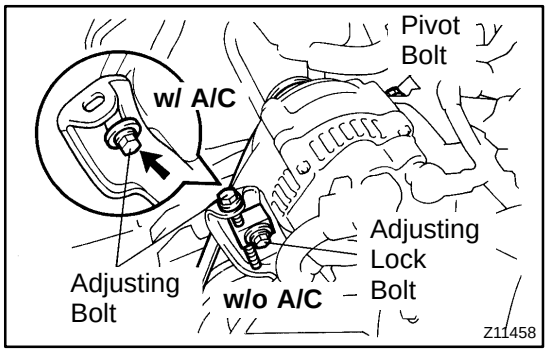

17. REMOVE GENERATOR DRIVE BELT

(a) Loosen the adjusting lock bolt (w/ A/C), pivot bolt and adjusting bolt.

(b) Remove the drive belt.

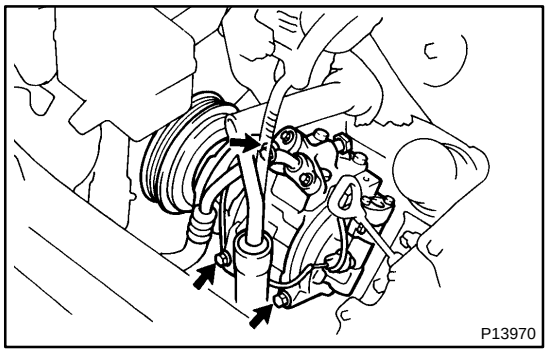

18. DISCONNECT A/C COMPRESSOR FROM ENGINE

(a) Disconnect the A/C compressor connector.

(b) Remove the 3 bolts, and disconnect the A/C compressor from the engine.

HINT:

Suspend the A/C compressor securely.

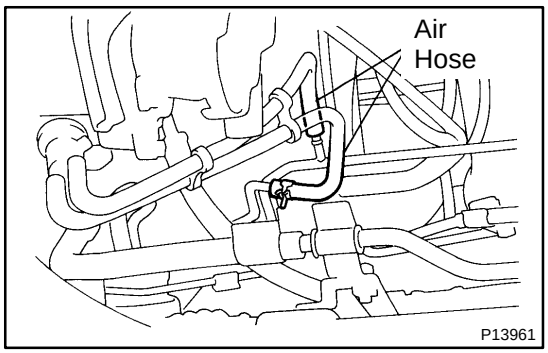

19. DISCONNECT PS PUMP FROM ENGINE

(a) Disconnect the 2 air hoses from the air tube.

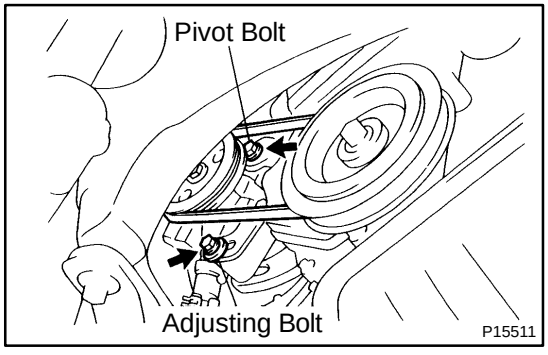

(b) Loosen the pivot bolt and adjusting bolt.

(c) Remove the drive belt.

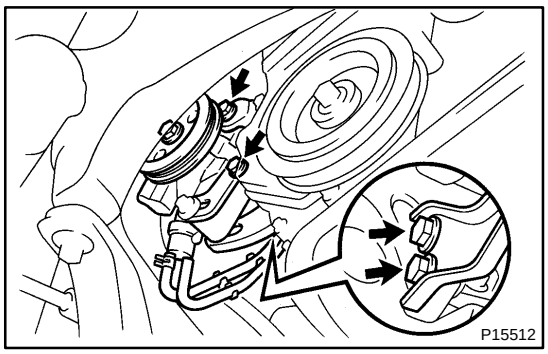

(d) Remove the 4 bolts, and disconnect the PS pump from the engine.

HINT:

Suspend the PS pump securely.

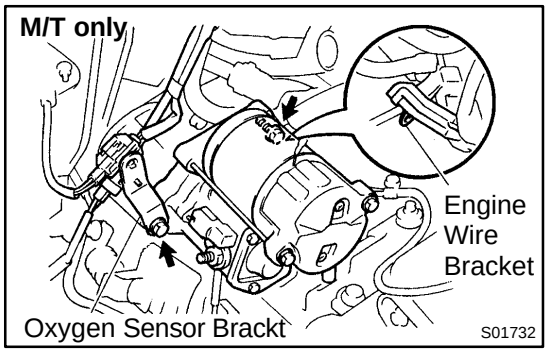

20. M/T:
REMOVE STARTER

(a) Disconnect the starter connector.
(b) Remove the nut, and disconnect the starter cable.
(c) Remove the 2 bolts.
(d) Disconnect the oxygen sensor and engine wire brackets from the starter.
(e) Remove the starter.

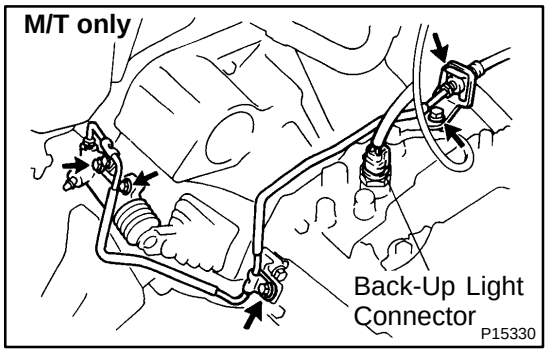

21. M/T:
DISCONNECT CLUTCH RELEASE CYLINDER FROM TRANSAXLE

(a) Disconnect the back-up light switch connector.
(b) Remove the clamp, and disconnect the tube from the bracket.
(c) Remove the bolt, and disconnect the bracket from the transaxle.
(d) Remove the clamp bolt, and disconnect the tube from the transaxle.
(e) Remove the 2 bolts, and disconnect the release cylinder from the transaxle.

22. DISCONNECT TRANSAXLE CONTROL CABLE(S) FROM TRANSAXLE

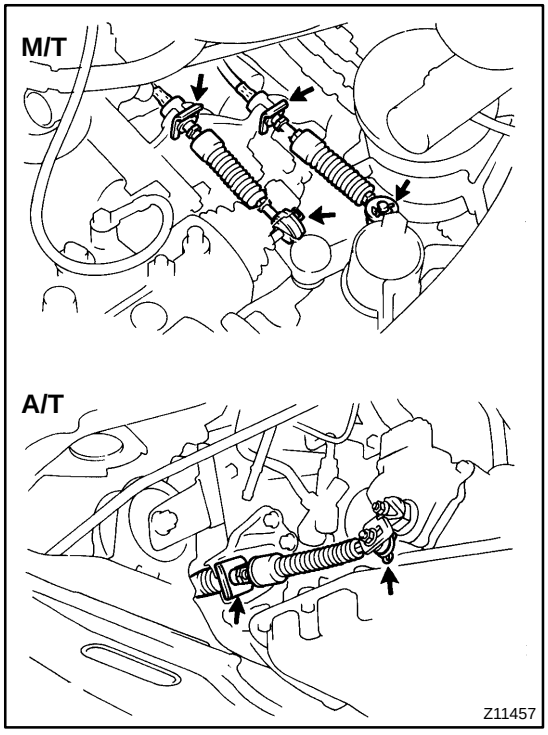

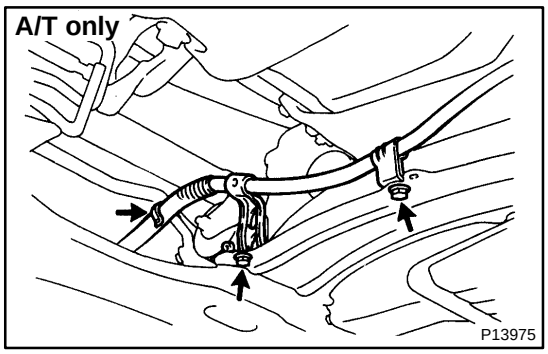

23. A/T:
DISCONNECT TRANSAXLE CONTROL CABLE FROM ENGINE MOUNTING CENTER MEMBER

Remove the 2 bolts, and disconnect the control cable from the center member.

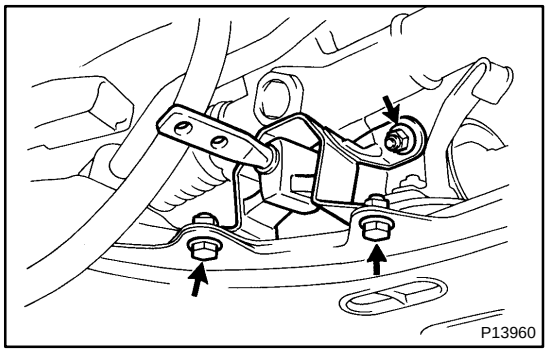

24. REMOVE EXHAUST PIPE SUPPORT BRACKET

Remove the 2 bolts, nut and support bracket.

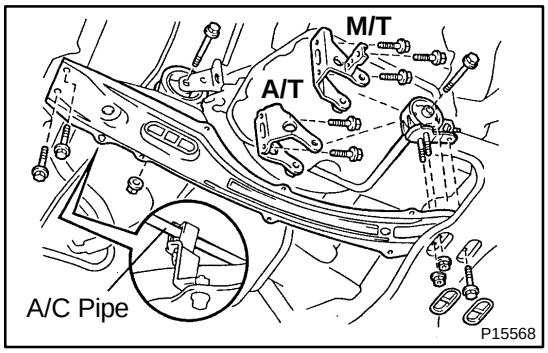

25. REMOVE ENGINE MOUNTING CENTER MEMBER

(a) Remove the 2 dust covers from the rear side of the center member.
(b) Disconnect the A/C pipe from the bracket.
(c) Remove the bolt and nut holding the front engine mounting bracket to the mounting insulator.
(d) Remove the bolt holding the rear engine mounting bracket to the mounting insulator.
(e) Remove the bolt and 2 nuts holding the rear engine mounting insulator to the front suspension member.
(f) Remove the 2 bolts (A/T) or 3 bolts (M/T) and rear engine mounting bracket.
(g) Remove the 2 bolts holding the center member to the body, and remove the center member and rear engine mounting insulator.

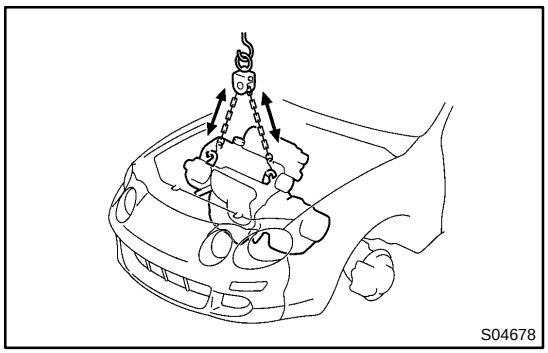

26. REMOVE ENGINE AND TRANSAXLE ASSEMBLY FROM VEHICLE

(a) Attach the engine chain hoist to the engine hangers.

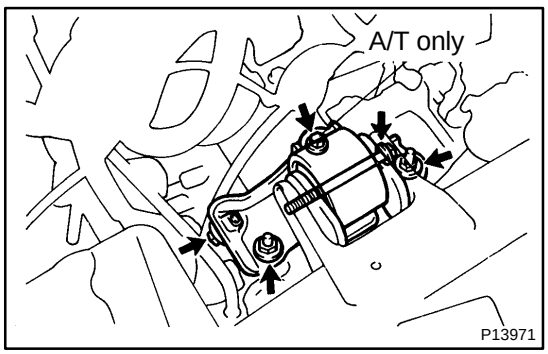

(b) Remove the 2 nuts and bolt (M/T) or 2 bolts (A/T), and disconnect the LH engine mounting bracket from the mounting insulator.
(c) Remove the through bolt and LH engine mounting insulator.

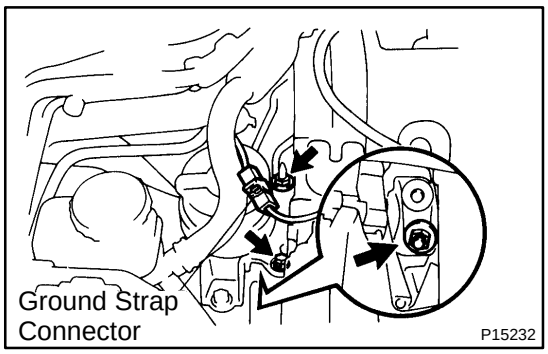

(d) Disconnect the ground strap connector.
(e) Remove the bolt and 2 nuts, and disconnect the RH engine mounting bracket from the mounting insulator.

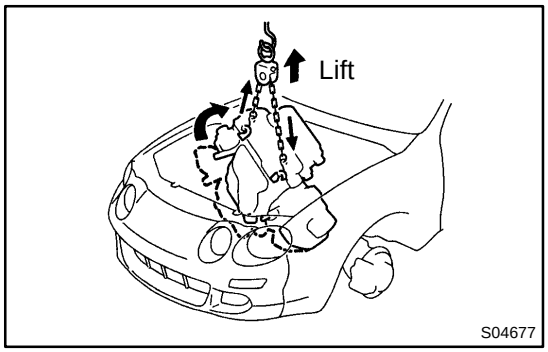

(f) Lift the engine out of the vehicle slowly and carefully.
HINT:
Make sure the engine is clear of all wiring, hoses and cables.
(g) Place the engine and transaxle assembly onto the stand.

27. REMOVE DRIVE SHAFT BEARING BRACKET

Remove the 3 bolts and bearing bracket.

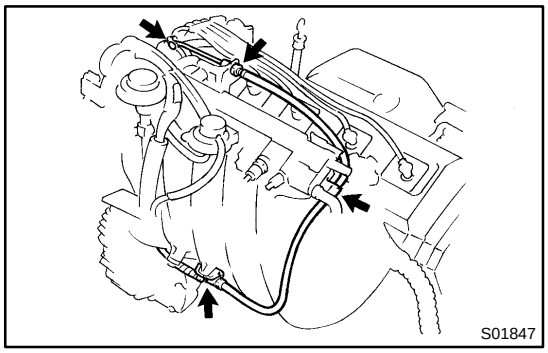

28. A/T:
DISCONNECT A/T THROTTLE CABLE FROM THROTTLE BODY AND INTAKE MANIFOLD

(a) Disconnect the throttle cable from the throttle body.
(b) Disconnect the throttle cable from the cable bracket.
(c) Disconnect the throttle cable fromthe clamps on the intake manifold.

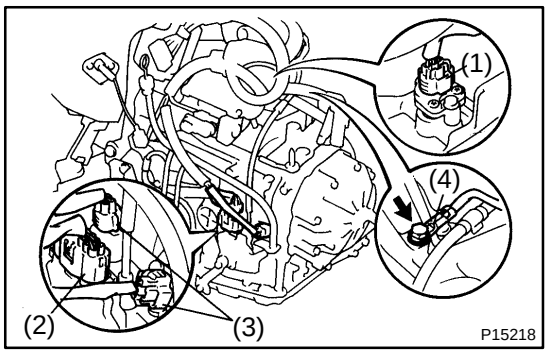

29. DISCONNECT CONNECTORS AND CABLE

Disconnect the connectors and cable:
(1) VSS connector
(2) A/T:
PNP switch connector
(3) A/T:
2 solenoid connectors
(4) Ground cable

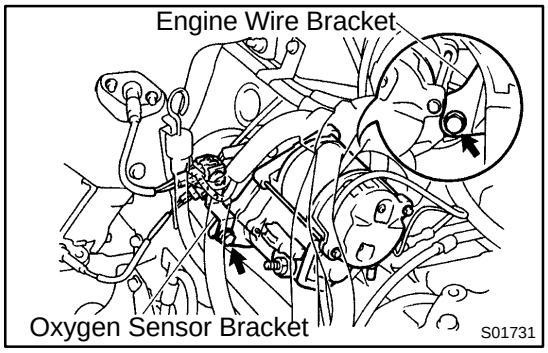

30. A/T:
REMOVE STARTER

(a) Disconnect the starter connector.
(b) Remove the nut, and disconnect the starter cable.
(c) Remove the 2 bolts.
(d) Disconnect the oxygen sensor and engine wire brackets from the starter.
(e) Remove the starter.

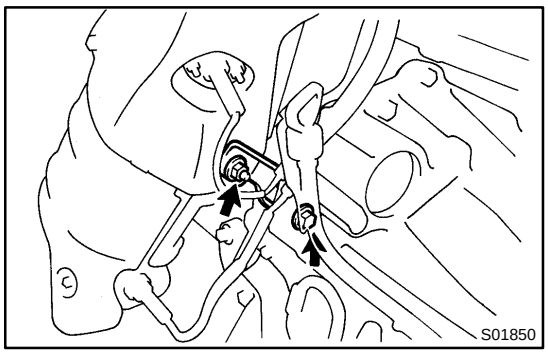

31. REMOVE LH EXHAUST MANIFOLD STAY

Remove the bolt, nut and exhaust manifold stay.

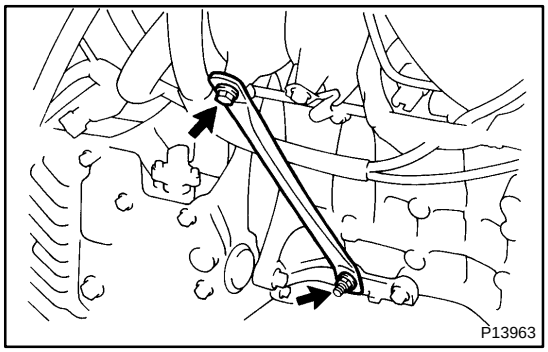

32. REMOVE NO.2 INTAKE MANIFOLD STAY

Remove the bolt, nut and intake manifold stay.

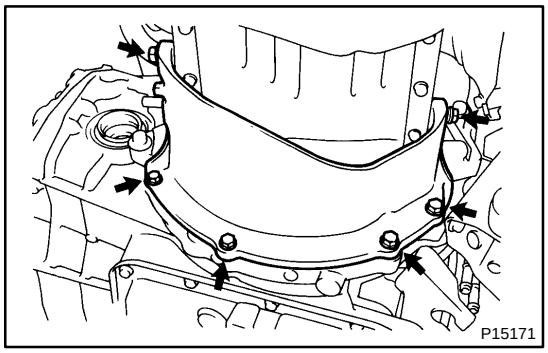

33. REMOVE REAR END PLATE STIFFENER

Remove the 6 bolts and plate stiffener.

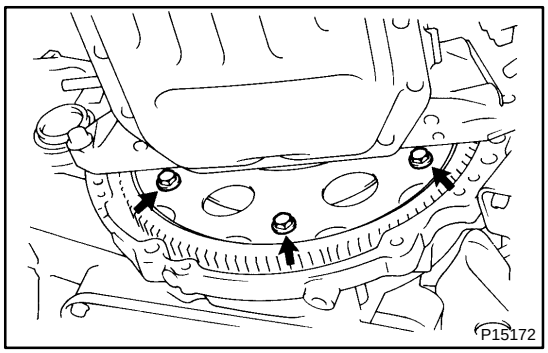

34. A/T:
REMOVE TORQUE CONVERTER CLUTCH BOLTS

(a) Turn the crankshaft pulley bolt to gain access to each bolt.
(b) Hold the crankshaft pulley bolt with a wrench, and remove the 6 bolts.

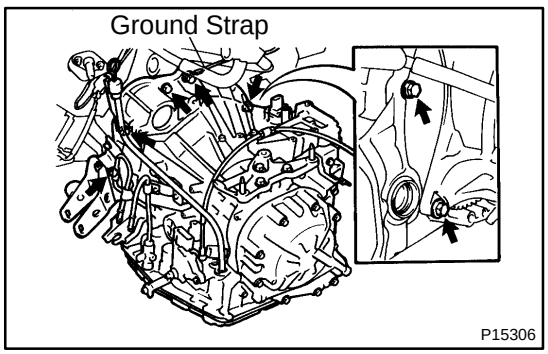

35. REMOVE TRANSAXLE

(a) Remove the 6 bolts, and disconnect the ground strap from the transaxle.
(b) Remove the transaxle together with the torque converter clutch (A/T) from the engine.

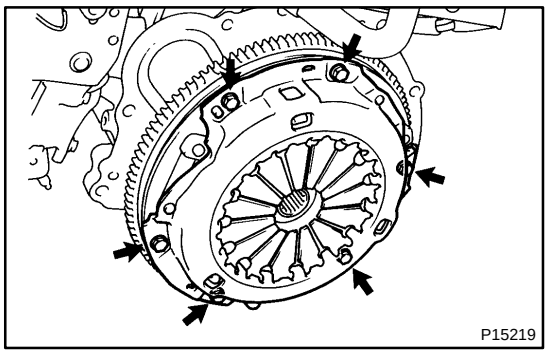

36. M/T:
REMOVE CLUTCH COVER AND DISC

Remove the 6 bolts, clutch cover and disc.

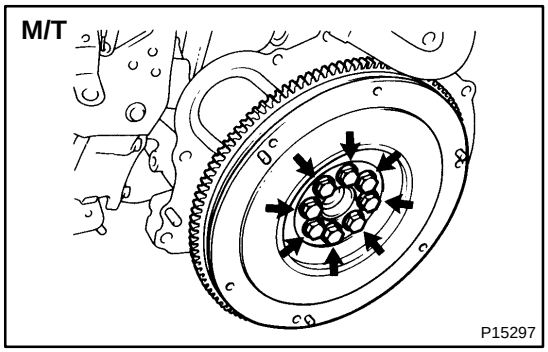

37. M/T:
REMOVE FLYWHEEL

Remove the 8 bolts and flywheel.

38. A/T:
REMOVE DRIVE PLATE

Remove the 8 bolts, front plate, drive plate and rear spacer.

39. REMOVE REAR END PLATE

Remove the bolt and end plate.

SF0W8-02

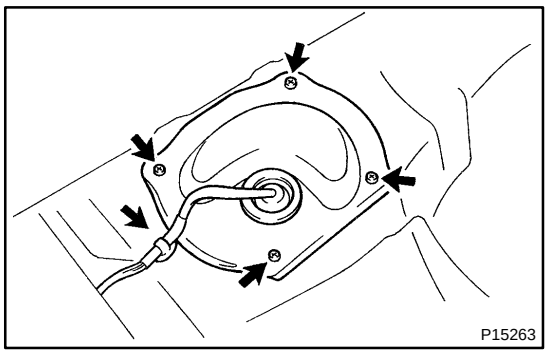

REMOVAL

CAUTION:

Do not smoke or work near an open flame when working on the fuel pump.

1. REMOVE REAR SEAT CUSHION

2. REMOVE SERVICE HOLE COVER

HINT:

Remove the 4 screws, and disconnect the service hole cover from the floor panel.

Torque: 3.5 N·m (35 kgf·cm, 31 in.·lbf)

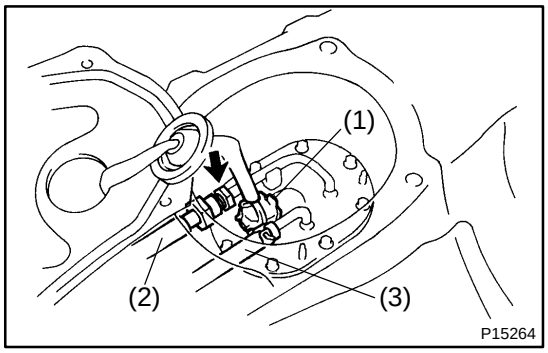

3. REMOVE FUEL PUMP AND SENDER GAUGE ASSEMBLY

(a) Disconnect the following connector, pipe and hose:
- (1) Fuel pump & sender gauge connector
- (2) Fuel outlet pipe
- (3) Fuel return hose

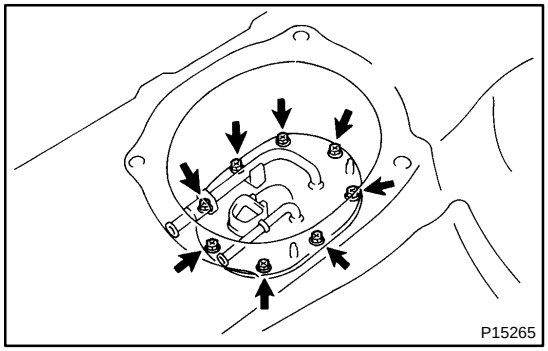

(b) Remove the 8 bolts.

(c) Remove the fuel pump, sender gauge assembly and gasket.

HINT:

Use SST.

Torque: 24 N·m (240 kgf·cm, 17 ft·lbf)

CH05Z-02

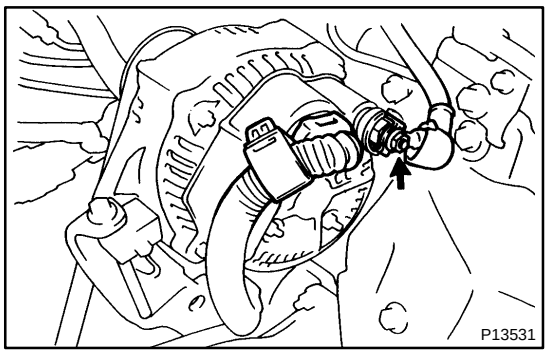

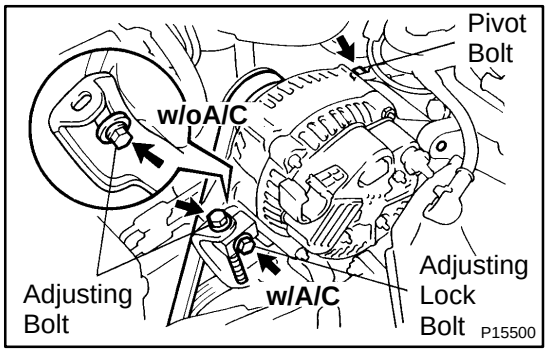

REMOVAL

REMOVE GENERATOR

(a) Disconnect the wire from the clamp on the rear end cover.
(b) Disconnect the generator connector.
(c) Remove the rubber cap and nut, and disconnect the generator wire.

NOTICE:

Perform on-vehicle inspection (See page CH-2).

(d) Loosen the adjusting lock bolt (w/ A/C), adjusting bolt and pivot bolt.

Torque:
Pivot bolt
54 N·m (530 kgf·cm, 40 ft·lbf)
Adjusting lock bolt (w/ A/C) or
Adjusting bolt (w/o A/C)
19 N·m (185 kgf·cm, 14 ft·lbf)

(e) Remove the drive belt.

HINT:

Adjust the drive belt (See page CH-2).

(f) Remove the adjusting lock bolt (w/ A/C) or adjusting bolt (w/o A/C) and pivot bolt.

HINT:

Do not tighten the bolts yet.

(g) Remove the generator.

SF0V6-02

REMOVAL

1. DISCONNECT THROTTLE BODY FROM INTAKE MANIFOLD
(See page SF-34)

2. REMOVE CYLINDER HEAD COVER

(a) Disconnect the 4 high-tension cords from the clamp on the cylinder head cover.
(b) Disconnect the 4 high-tension cords from the spak plugs.
(c) Remove the 2 bolts, and disconnect the cable bracket from the intake manifold.
(d) Disconnect the accelerator cable from the clamp on the intake manifold.
(e) Disconnect the PCV hose from the intake manifold.

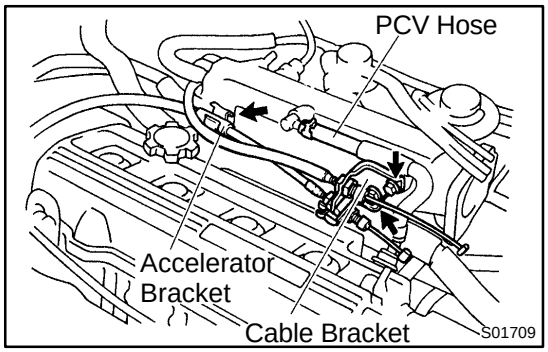

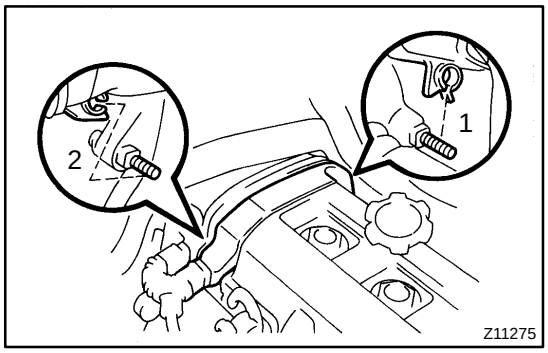

(f) Disconnect the engine wire protector from the 2 mounting bolts of the No.2 timing belt cover in the sequence shown.
(g) Remove the oil filler cap.
(h) Remove the cylinder head cover.
(See page EM-29)

NOTICE:
Cover the cylinder head with a clean cloth to prevent dirt, etc. getting into the cylinder head.

3. REMOVE DELIVERY PIPE AND INJECTORS

(a) Disconnect the air hose from the fuel pressure regulator.
(b) California only:
Disconnect the air hose for the air assist system from the intake manifold port, and remove the air hose.
(c) Remove the union bolt and 2 gaskets, and disconnect the fuel inlet hose from the delivery pipe.

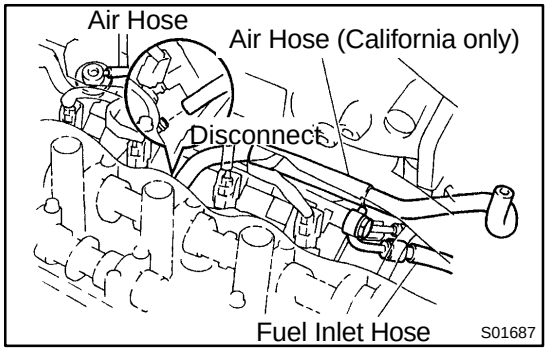

(d) Disconnect the 4 injector connectors.

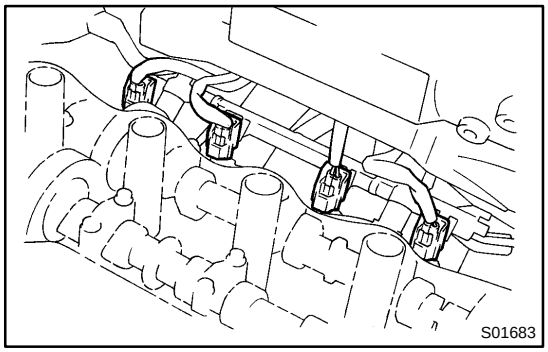

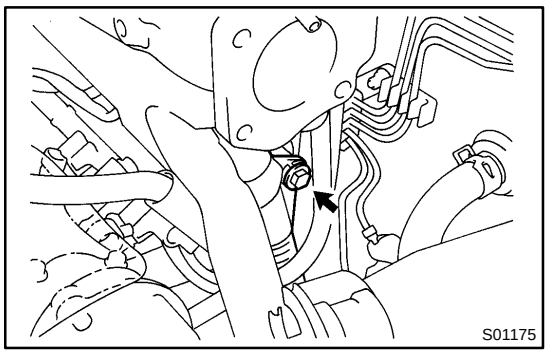

(e) Remove the bolt, and disconnect the engine wire protector from the LH side of the intake manifold.

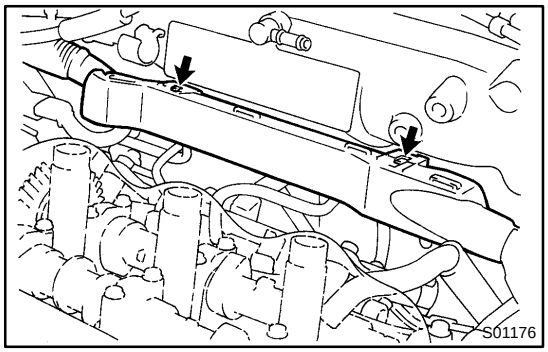

(f) Disconnect the engine wire protector from the 2 brackets on the front side of the intake manifold.

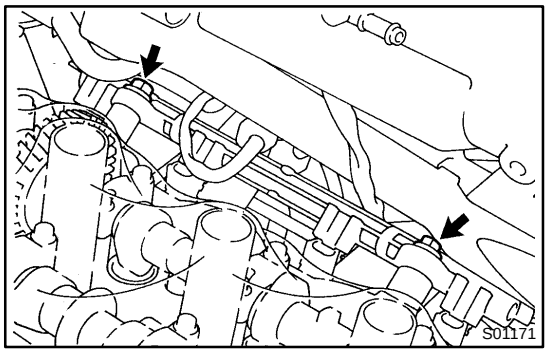

(g) Remove the 2 bolts holding the delivery pipe to the cylinder head.

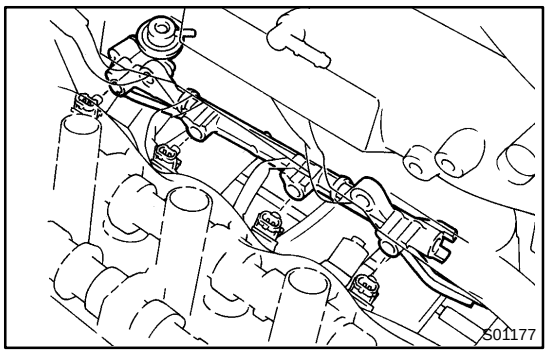

(h) Disconnect the delivery pipe from the 4 injectors.
(i) Pull out the 4 injectors.

NOTICE:

Be careful not to drop the injectors.

(j) Remove the 4 insulators (Except California) and 2 spacers from the cylinder head.

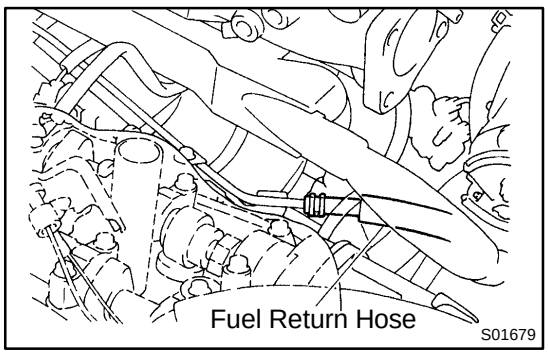

(k) Disconnect the fuel return hose from the return pipe, and remove the delivery pipes.

- California:
  Remove the 2 O-rings, insulator and grommet from each injector.
- Except California:
  Remove the O-ring and grommet from each injector.

LU086-03

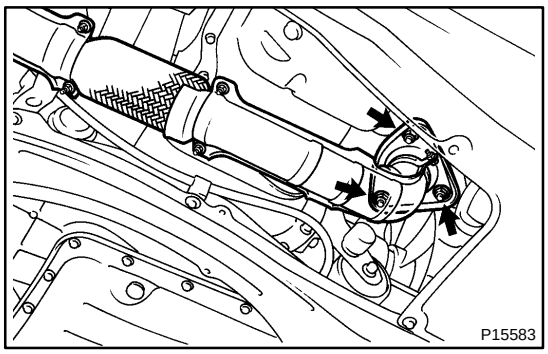

REMOVAL

1. DRAIN ENGINE COOLANT

2. DISCONNECT FRONT EXHAUST PIPE FROM FRONT TWC

Remove the 3 bolts holding the front exhaust pipe to the TWC, Disconnect the exhaust pipe from the TWC. Remove the gasket.

3. REMOVE GENERATOR
(See page CH-7)

4. REMOVE OIL DIPSTICK

5. REMOVE EXHAUST MANIFOLD AND FRONT TWC ASSEMBLY
(See page EM-1 14)

6. REMOVE WATER BYPASS PIPE HEAT PROTECTOR

Remove the bolt, 2 nuts and heat protector.

7. REMOVE OIL FILTER
(See page LU-2)

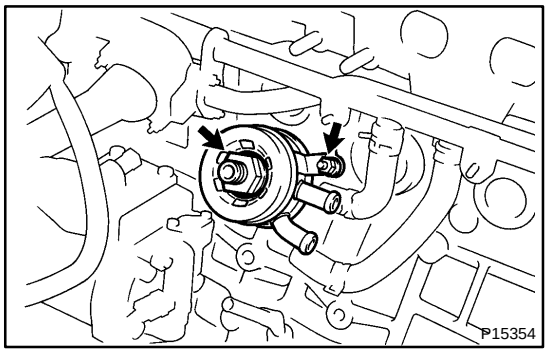

8. REMOVE OIL COOLER

(a) Disconnect the 2 water bypass hoses from the oil cooler.
(b) Remove the relief valve and plate washer.
(c) Remove the nut and oil cooler.
(d) Remove the O-ring and gasket from the oil cooler.

LU080-01

DISASSEMBLY

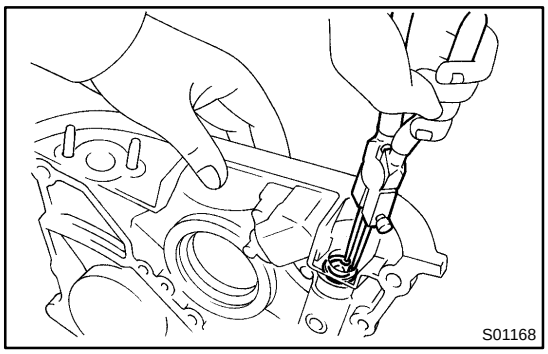

1. REMOVE RELIEF VALVE

(a) Using snap ring pliers, remove the snap ring.

(b) Remove the retainer, spring and relief valve.

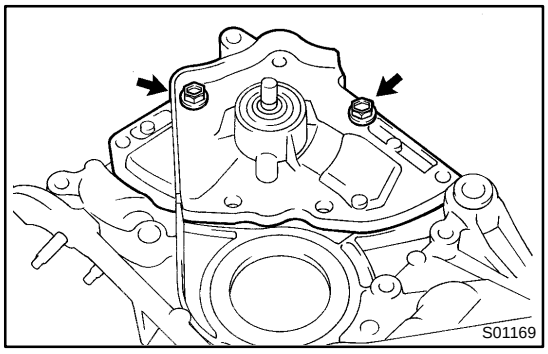

2. REMOVE DRIVE AND DRIVEN ROTORS

Remove the 2 bolts, pump body cover, O-ring, the drive and driven rotors.

CO18W-01

REMOVAL

1. DRAIN ENGINE COOLANT

2. CANADA only:
DISCONNECT RELAY BOX (FOR DAYTIME RUNNING LIGHT SYSTEM) FROM RADIATOR

Remove the 2 bolts, and disconnect the relay box from the radiator.

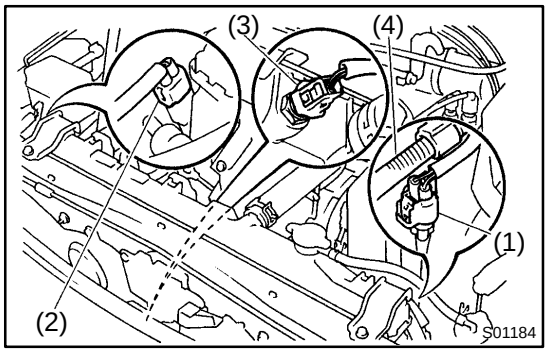

3. REMOVE RADIATOR ASSEMBLY

(a) Disconnect the connectors and wire:
- (1) No.1 cooling fan connector
- (2) w/ A/C:
  No.2 cooling fan connector
- (3) ECT switch connector for electric cooling fan
- (4) Wire from clamp on No.1 cooling fan

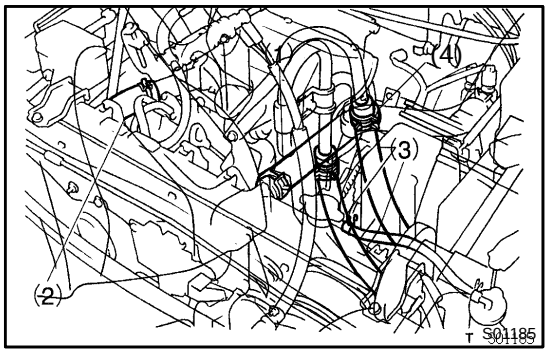

(b) Disconnect these hoses:
- (1) Upper radiator hose from radiator
- (2) Lower radiator hose from water inlet
- (3) Radiator reservoir hose from radiator
- (4) 2 oil cooler hoses from oil cooler pipes

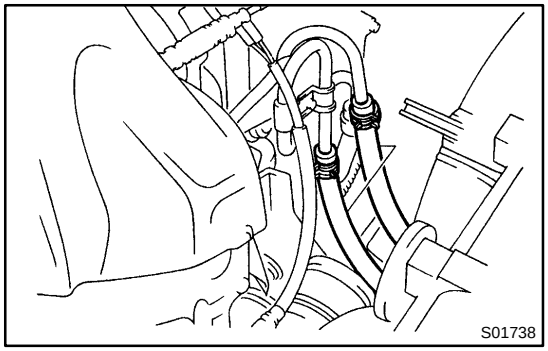

(c) Remove the 2 bolts and 2 upper radiator supports.

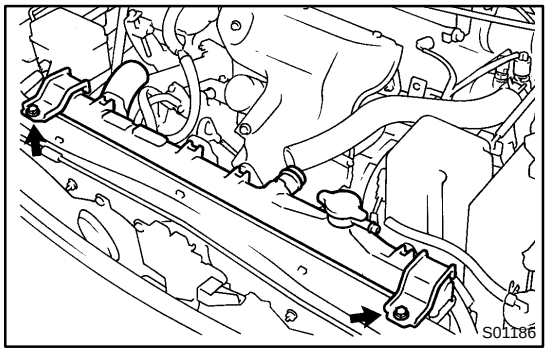

(d) Remove the radiator assembly.

(e) Remove the 2 lower radiator supports.

(f) Remove these hoses from the radiator:
- Lower radiator hose
- 2 A/T oil cooler hoses

4. w/ A/C:
REMOVE NO.2 COOLING FAN FROM RADIATOR

Remove the 3 bolts and cooling fan.

5. REMOVE NO.1 COOLING FAN FROM RADIATOR

Remove the 4 bolts and cooling fan.

ST07Q-03

REMOVAL

1. REMOVE AIR CLEANER (See page EM-72)

2. w/ Cruise Control System:
REMOVE BATTERY

HINT:
Face the arrow mark on the hold-down clamp forward.

3. w/ Cruise Control System:
DISCONNECT CRUISE CONTROL ACTUATOR FROM BODY BRACKET

(a) Disconnect the actuator connector.
(b) Remove the 3 bolts, and disconnect the actuator from the body bracket.

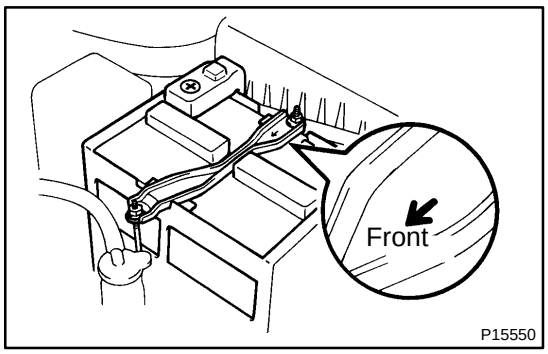

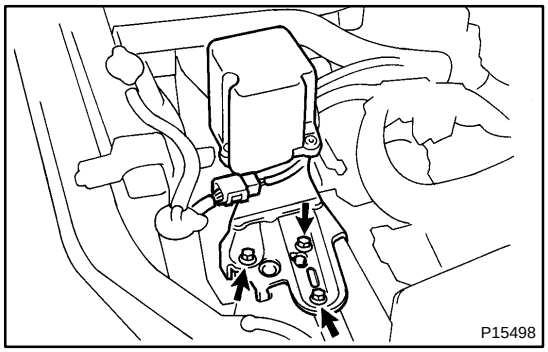

4. REMOVE STARTER

(a) Disconnect the starter connector.
(b) Remove the nut, and disconnect the starter cable.

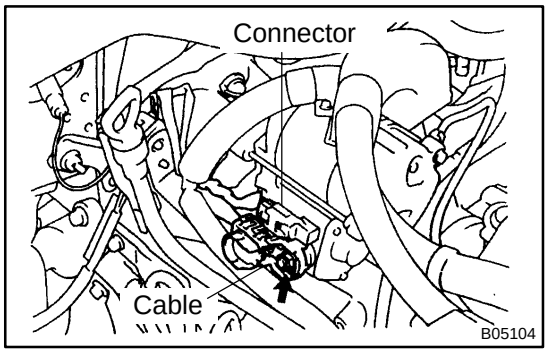

(c) Remove the 2 bolts.
(d) Disconnect the oxygen sensor connector and engine wire brackets from the starter.
(e) Remove the starter.
Torque: 39 N·m (400 kgf·cm, 29 ft·lbf)

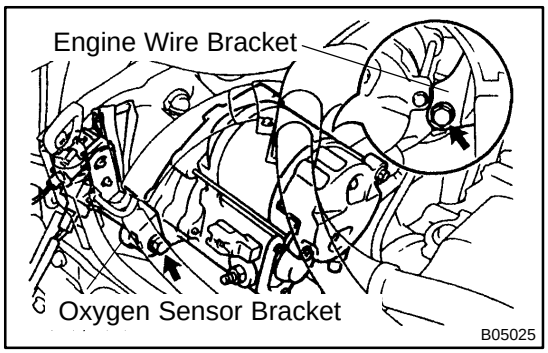

CO0GE-02

REMOVAL

HINT:

Removal of the thermostat would have an adverse effect, causing a lowering of cooling efficiency. Do not remove the thermostat, even if the engine tends to overheat.

1. DRAIN ENGINE COOLANT

2. REMOVE OIL FILTER

(See page LU-2)

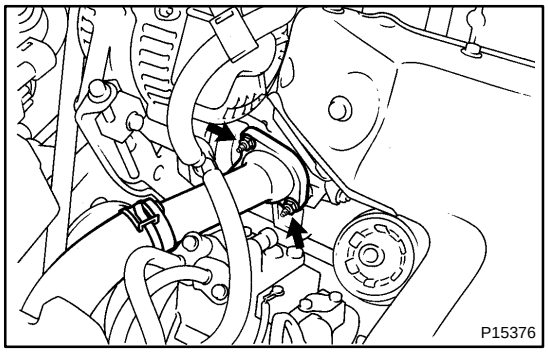

3. REMOVE WATER INLET AND THERMOSTAT

(a) Remove the 2 nuts, and disconnect the water inlet from the water pump cover.

(b) Remove the thermostat.

(c) Remove the gasket from the thermostat.

SF0VE-02

REMOVAL

1. DRAIN ENGINE COOLANT

2. REMOVE AIR CLEANER CAP
(See page EM-72)

3. DISCONNECT CONTROL CABLES FROM THROTTLE BODY

Disconnect these cables:

- Accelerator cable
- A/T throttle control cable

4. REMOVE THROTTLE BODY

(a) Disconnect these connectors:
- Throttle position sensor connector
- IAC valve connector

(b) Disconnect these hoses:
- Vacuum hose (from upper port of TVV for EVAP) from port "P" of throttle body
- Vacuum hose (from port "Q" of EGR vacuum modulator) from port "E" of throttle body
- Vacuum hose (from port "R" of EGR vacuum modulator) from port "R" of throttle body

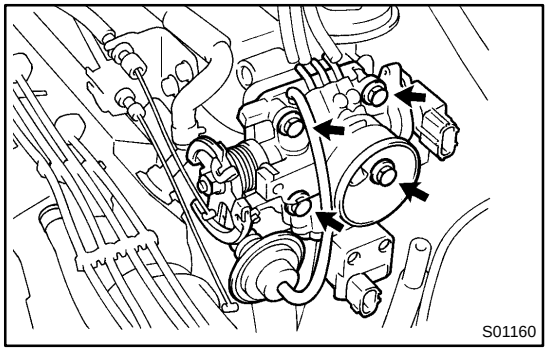

(c) Type A:
Remove the 4 bolts.

(d) Type B:
Remove the 2 bolts and 2 nuts.

(e) Disconnect the throttle body from the intake manifold.

(f) Remove the gasket.

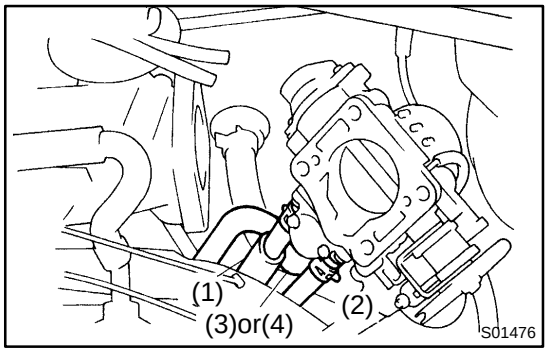

(g) Disconnect these hoses from the throttle body, and remove the throttle body:
(1) Water bypass hose (from water outlet)
(2) Water bypass hose (from water bypass pipe)
- California:
  Air hose (from intake manifold) for air assist system
- Except California:
  Air hose (from air tube) for PS idle-up

EM0J4-03

REMOVAL

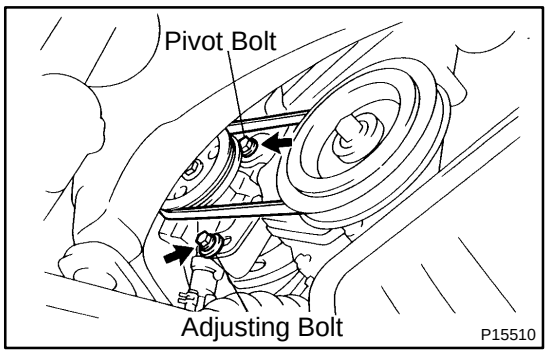

1. REMOVE GENERATOR
(See page CH-7)

2. REMOVE RH ENGINE UNDER COVER

3. REMOVE RH FRONT WHEEL

4. REMOVE PS PUMP DRIVE BELT

Loosen the pivot bolt and adjusting bolt, and remove the drive belt.

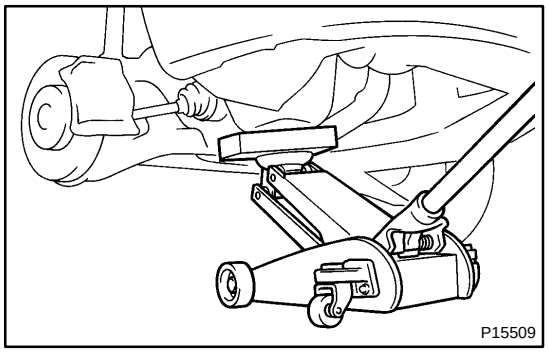

5. SLIGHTLY JACK UP ENGINE

Raise the engine enough to remove the weight from the engine mounting on the right side.

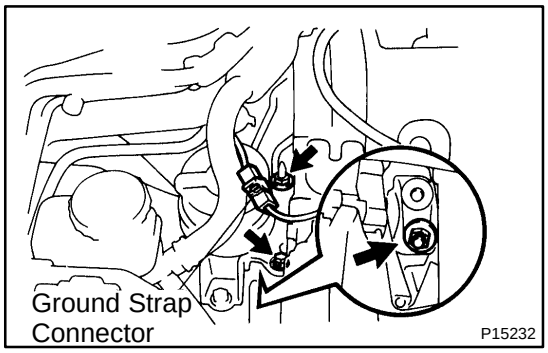

6. DISCONNECT GROUND STRAP CONNECTOR

7. REMOVE RH ENGINE MOUNTING INSULATOR

(a) Remove the bolt and 2 nuts holding the mounting insulator to the mounting bracket.

(b) Disconnect the PS reservoir from the reservoir bracket.

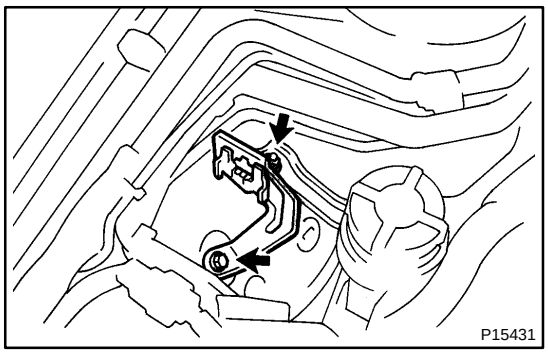

(c) Remove the bolt, nut and PS reservoir bracket.

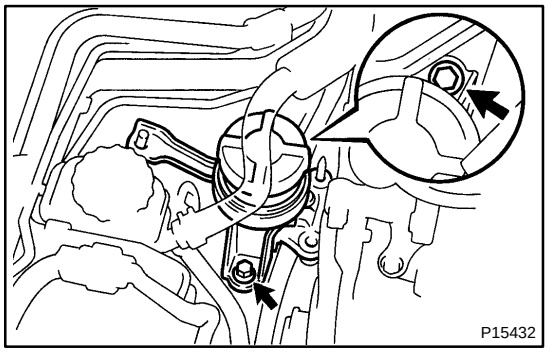

(d) Remove the 2 bolts and mounting insulator.

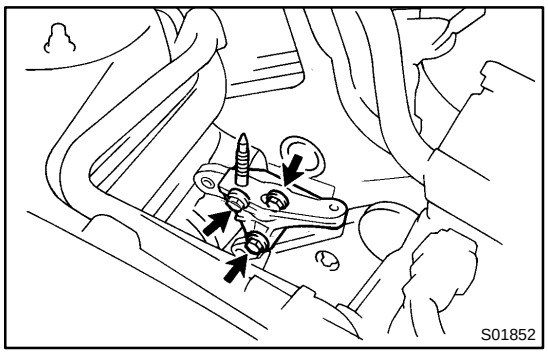

8. REMOVE RH ENGINE MOUNTING BRACKET

Remove the 3 bolts and mounting bracket.

HINT:

Raise the engine as far as it will go, and remove the mounting bracket.

9. REMOVE SPARK PLUGS

(a) Disconnect the 4 high-tension cords from the clamp on the cylinder head cover.

(b) Disconnect the 4 high-tension cords from the spark plug.

(c) Remove the 4 spark plugs.

10. REMOVE NO.2 TIMING BELT COVER

(a) Remove the 2 bolts, and disconnect the engine wire protector from the generator bracket and adjusting bar.

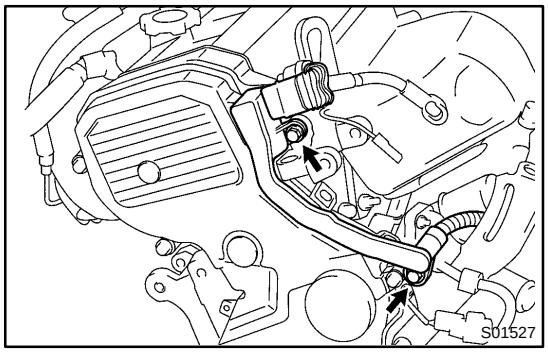

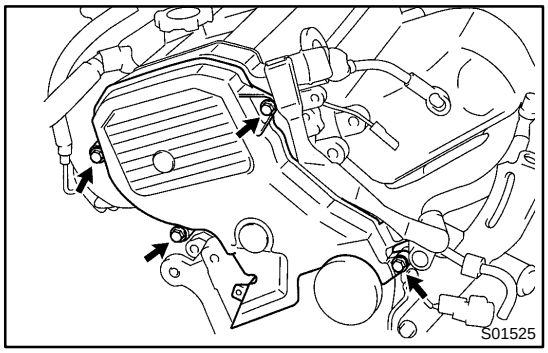

(b) Remove the 4 bolts and timing belt cover.

11. SET NO.1 CYLINDER TO TDC/COMPRESSION

(a) Turn the crankshaft pulley, and align its groove with timing mark ”0” of the No.1 timing belt cover.

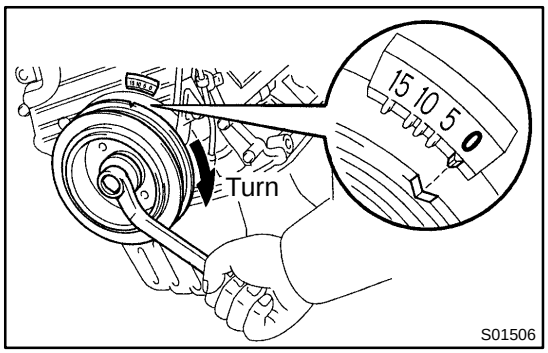

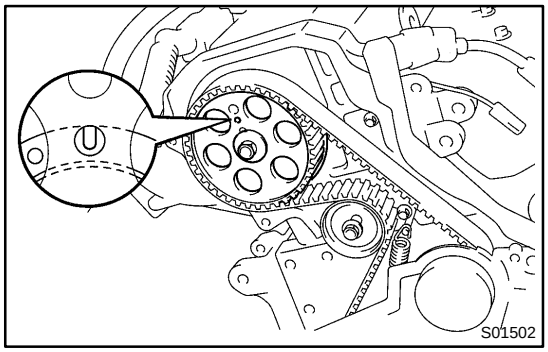

(b) Check that the hole of the camshaft timing pulley is aligned with the timing mark of the bearing cap.

If not, turn the crankshaft 1 revolution (360˚).

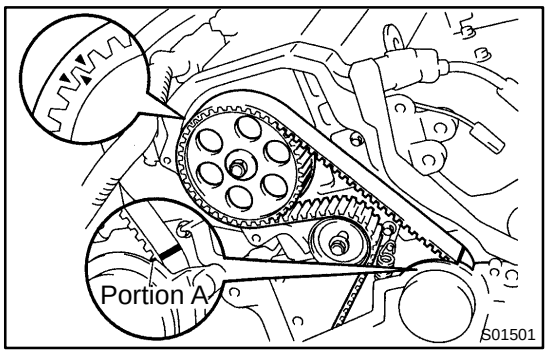

12. REMOVE TIMING BELT FROM CAMSHAFT TIMING PULLEY

HINT:

(When re-using timing belt): Place the matchmarks on the timing belt and camshaft timing pulley, and place matchmark on timing belt to match portion A of the No.1 timing belt cover.

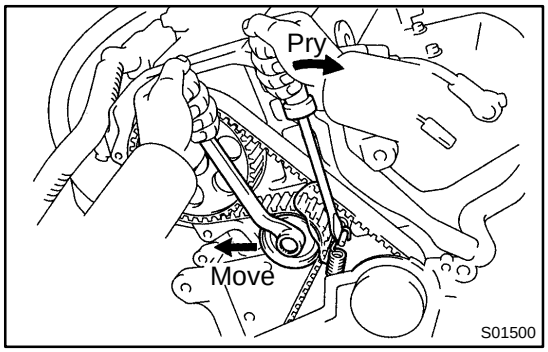

(a) Loosen the mounting bolt of the No.1 idler pulley, and shift the pulley toward the left as far as it will go, and temporarily tighten it.

(b) Remove the timing belt from the camshaft timing pulley.

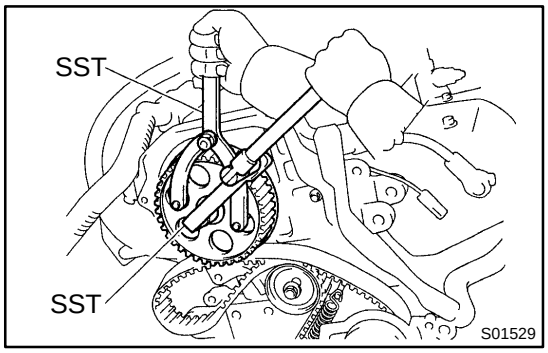

13. REMOVE CAMSHAFT TIMING PULLEY

(a) Using SST, loosen the pulley bolt.

SST 09249-63010, 09960-10010 (09962-01000, 09963-01000)

(b) Remove the bolt and timing pulley.

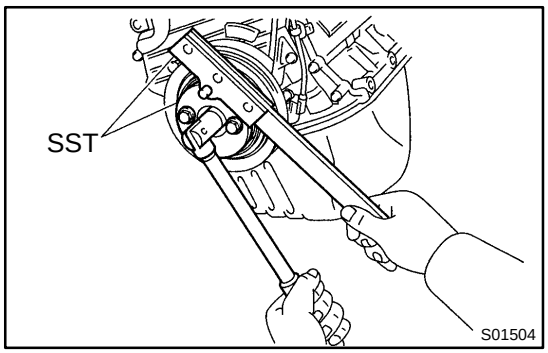

14. REMOVE CRANKSHAFT PULLEY

(a) Using SST (and bolt), loosen the pulley bolt.

SST 09213-54015 (91651-60855) for type A, 09330-00021

Bolt: Part No. 91121-40665 for type B

HINT:

- Either of 2 types of pulley may be used, each with its own bolt size, type A and type B.
- When using bolt type B, a plate washer must be inserted between the bolt and SST.

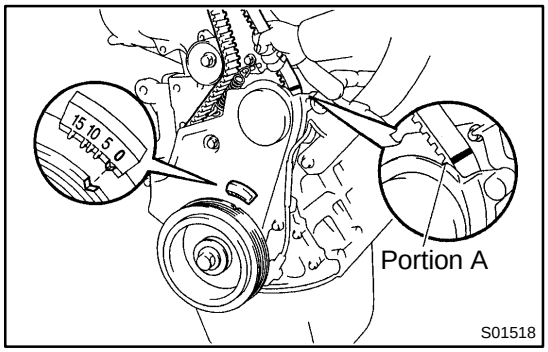

HINT:

(When re-using timing belt): After loosening the crankshaft pulley bolt, check that the timing belt matchmark aligns with portion A of the No.1 timing belt cover when the crankshaft pulley groove is aligned with the timing mark "0" of the No.1 timing belt cover. If the matchmark does not align, align as follows:

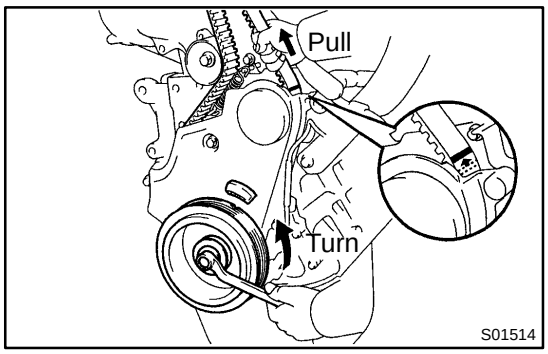

When matchmark is misaligned clockwise:
If the matchmark does not align, align as follows:

(1) Align the matchmark by pulling the timing belt up on the water pump pulley side while turning the crankshaft pulley counterclockwise.

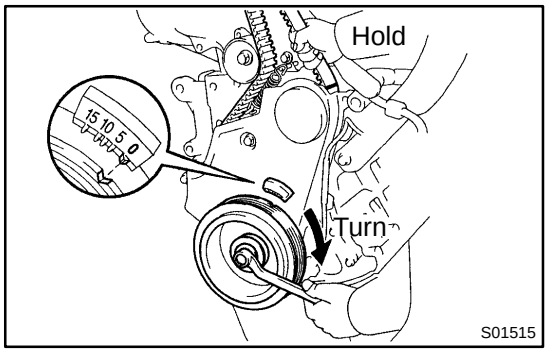

(2) After aligning the matchmark, hold the timing belt. And turn the crankshaft pulley clockwise, and align its groove with timing mark ”0” of the No.1 timing belt cover.

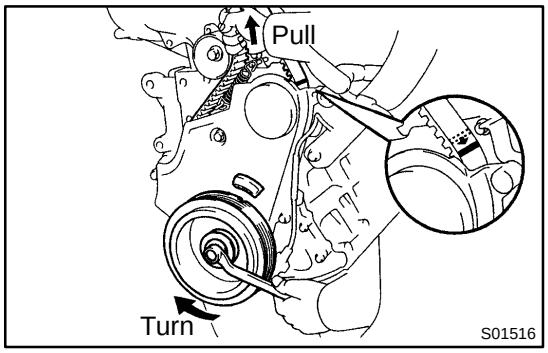

When matchmark is misaligned counterclockwise:
If the matchmark does not align, align as follows:

(1) Align the matchmark by pulling the timing belt up on the No.1 idler pulley side while turning the crankshaft pulley clockwise.

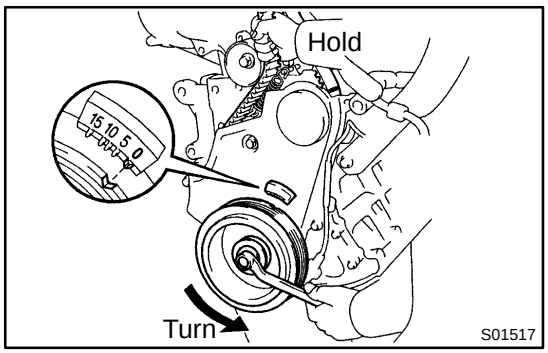

(2) After aligning the matchmark, hold the timing belt. And turn the crankshaft pulley counterclockwise, and align its groove with timing mark ”0” of the No.1 timing belt cover.

(b) Remove the pulley bolt.

(c) Using SST, remove the pulley.

SST 09950- 50012 (09951- 05010, 09952- 05010, 09953-05010, 09953-05020, 09954-05020 for type A, 09954-05010 for type B)

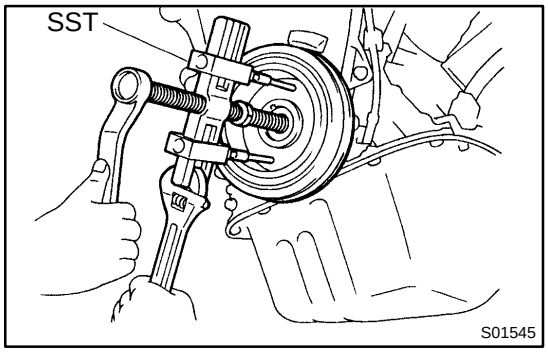

HINT:

- Either of 2 types of pulley may be used, each with its own bolt size, type A and type B.
- When re-using timing belt:
  Remove the pulley without turning it.

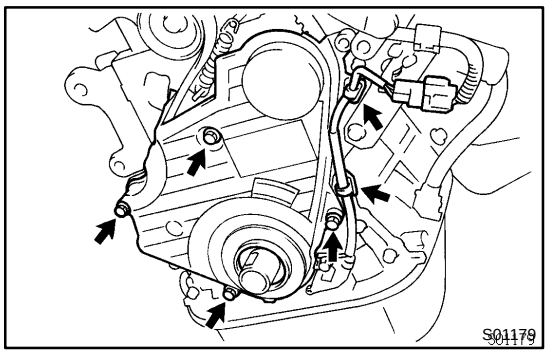

15. REMOVE NO.1 TIMING BELT COVER

(a) Disconnect the crankshaft position sensor wire from the clamp on the timing belt cover.

(b) Disconnect the clamp of the crankshaft position sensor wire from the timing belt cover.

(c) Remove the 4 bolts and timing belt cover.

16. REMOVE TIMING BELT GUIDE

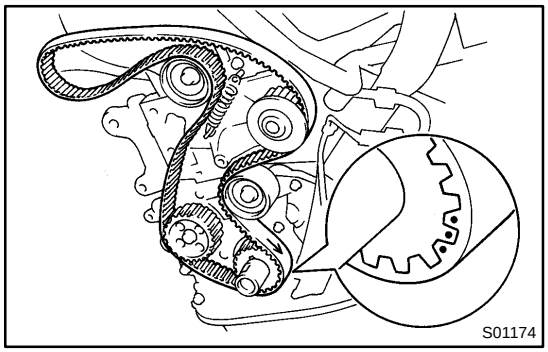

17. REMOVE TIMING BELT

HINT:

(When re-using timing belt): Draw a direction arrow on the timing belt (in the direction of engine revolution), and place matchmarks on the timing belt and crankshaft timing pulley.

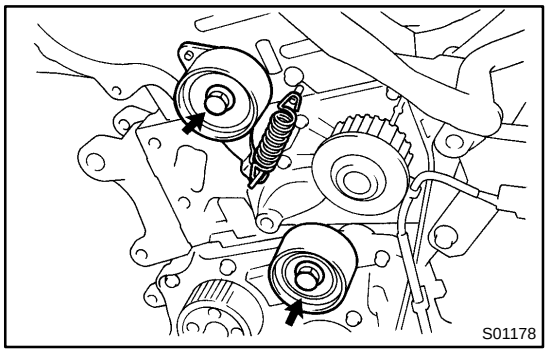

18. REMOVE NO.1 IDLER PULLEY AND TENSION SPRING

Remove the bolt, pulley and tension spring.

19. REMOVE NO.2 IDLER PULLEY

Remove the bolt and pulley.

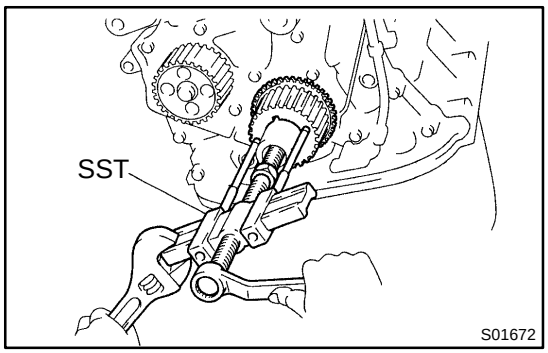

20. REMOVE CRANKSHAFT TIMING PULLEY

If the pulley cannot be removed by hand, use SST to remove the timing pulley.

SST 09950-50012 (09951-05010, 09952-05010, 09953-05010, 09953-05020, 09954-05010)

NOTICE:

Do not scratch the angle sensor of the timing pulley.

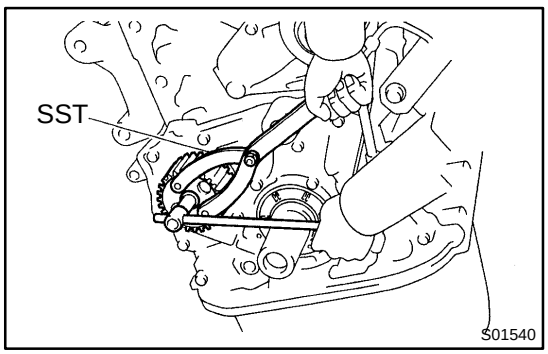

21. REMOVE OIL PUMP PULLEY

(a) Using SST, loosen the pulley nut.

SST 09960-10010 (09962-01000, 09963-00500)

(b) Remove the nut and pulley.

CO0GA-02

REMOVAL

1. REMOVE RH ENGINE UNDER COVER

2. DRAIN ENGINE COOLANT

3. REMOVE TIMING BELT
(See page EM-13)

4. DISCONNECT LOWER RADIATOR HOSE FROM WATER OUTLET

5. REMOVE TIMING BELT TENSION SPRING

Loosen the No.1 idler pulley bolt, and remove the tension spring.

6. REMOVE NO.2 IDLER PULLEY

Remove the bolt and idler pulley.

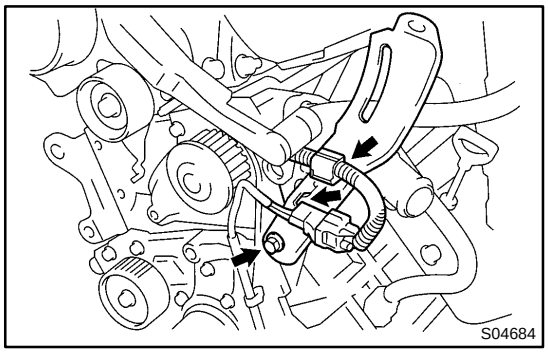

7. REMOVE GENERATOR DRIVE BELT ADJUSTING BAR

(a) Disconnect the crankshaft position sensor wire from the clamp on the adjusting bar.

(b) Disconnect the crankshaft position sensor connector from the bracket on the adjusting bar.

(c) Remove the bolt and adjusting bar.

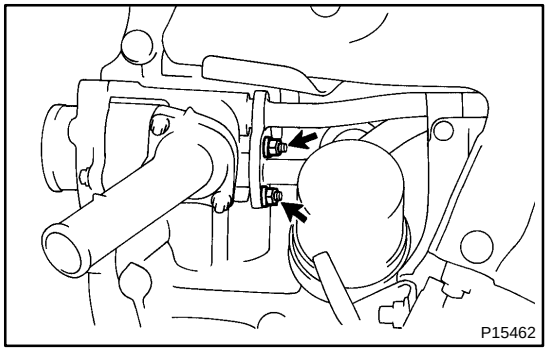

8. REMOVE WATER PUMP AND WATER PUMP COVER ASSEMBLY

(a) Remove the 2 nuts holding the water pump to the water bypass pipe.

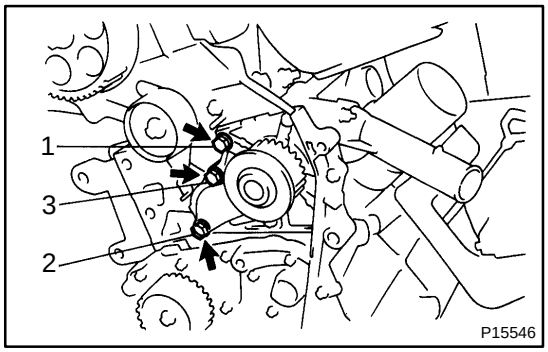

(b) Remove the 3 bolts in the sequence shown.

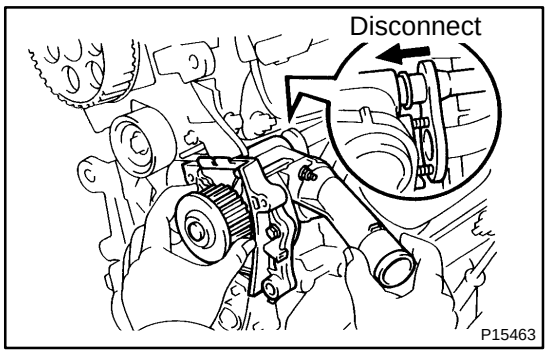

(c) Disconnect the water pump cover from the water bypass pipe, and remove the water pump and water pump cover assembly.

(d) Remove the gasket and 2 O-rings from the water pump and water bypass pipe.

9. REMOVE WATER PUMP FROM WATER PUMP COVER

Remove the 3 bolts, water pump and gasket.

SF0V2-02

REMOVAL

1. DISCONNECT AIR HOSE FROM FUEL PRESSURE REGULATOR

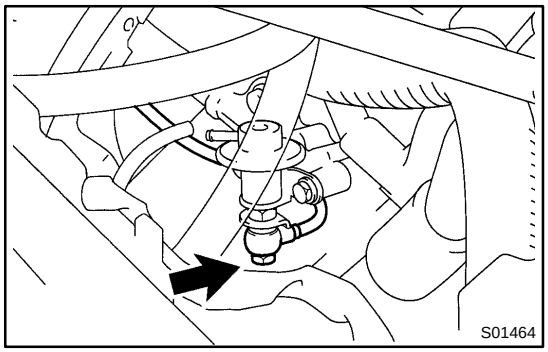

2. DISCONNECT FUEL RETURN PIPE FROM FUEL PRESSURE REGULATOR

Remove the union bolt and 2 gaskets, and disconnect the return pipe from the pressure regulator.

CAUTION:

Put a suitable container or shop rag under the pressure regulator. Slowly loosen the union bolt.

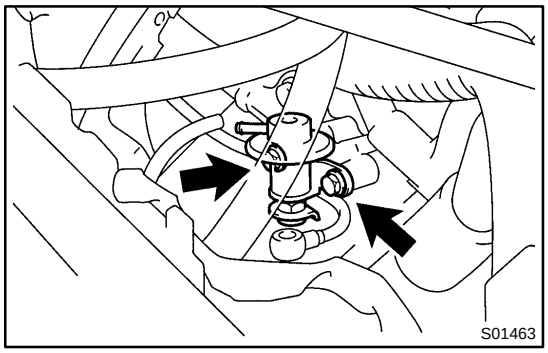

3. REMOVE FUEL PRESSURE REGULATOR

(a) Remove the 2 bolts, and pull out the pressure regulator.

(b) Remove the O-ring from the pressure regulator.

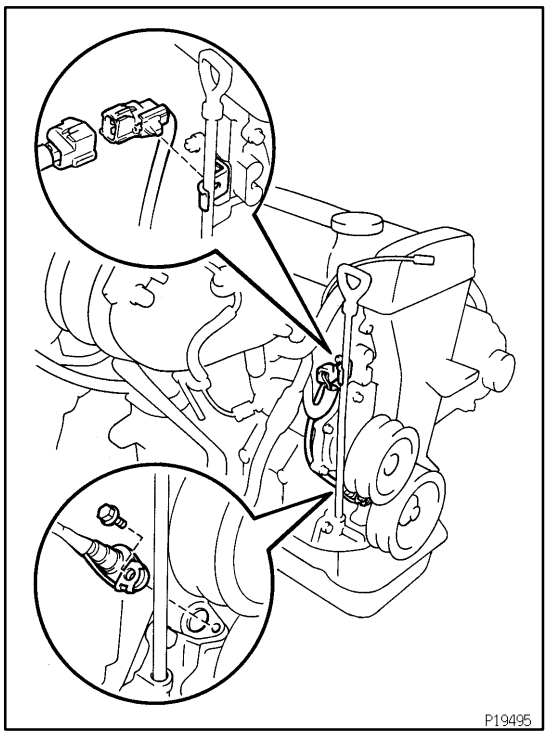

CAMSHAFT POSITION SENSOR

IG0GK-01

REMOVAL

REMOVE CRANKSHAFT POSITION SENSOR

(a) Disconnect the sensor connector.
(b) Remove the bolt and sensor.

EM1C2-02

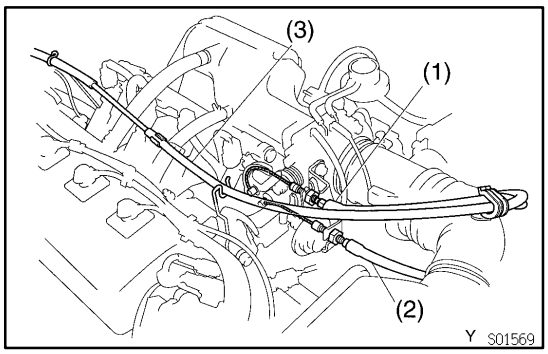

REMOVAL

1. REMOVE RH ENGINE UNDER COVER

2. DRAIN ENGINE COOLANT

3. DISCONNECT THESE CABLES:

(1) Accelerator cable

(2) A/T:
Throttle cable

(3) w/ Cruise control system:
Cruise control actuator cable

4. REMOVE AIR CLEANER HOSE AND CAP

5. REMOVE DISTRIBUTOR (See page IG-8)

6. LOOSEN WATER PUMP PULLEY BOLTS

Stretch the belt tight and loosen the 4 water pump pulley bolts.

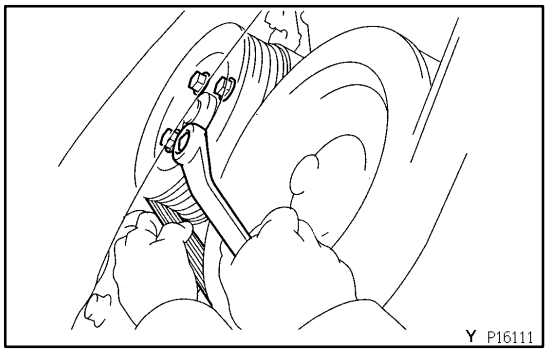

7. REMOVE GENERATOR AND DRIVE BELT (See page CH-8)

8. w/ A/C:
REMOVE A/C DRIVE BELT AND IDLER PULLEY (See page EM-58)

9. REMOVE PS PUMP ADJUSTING BRACKET AND DRIVE BELT (See page EM-58)

10. REMOVE WATER PUMP PULLEY

11. REMOVE FRONT EXHAUST PIPE (See page EM-58)

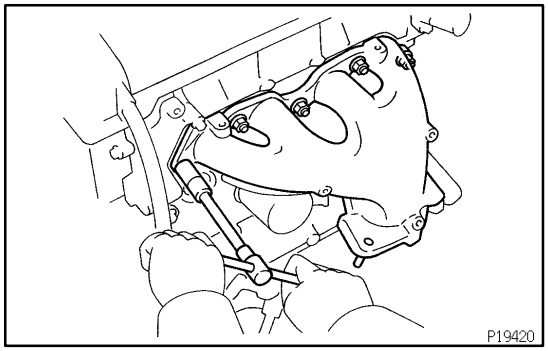

12. REMOVE EXHAUST MANIFOLD

(a) Remove the 5 bolts and upper heat insulator.

(b) Remove the 3 bolts and exhaust manifold stay.

(c) Remove the 5 nuts, exhaust manifold and gasket.

(d) Remove the 3 bolts and lower heat insulator from the exhaust manifold.

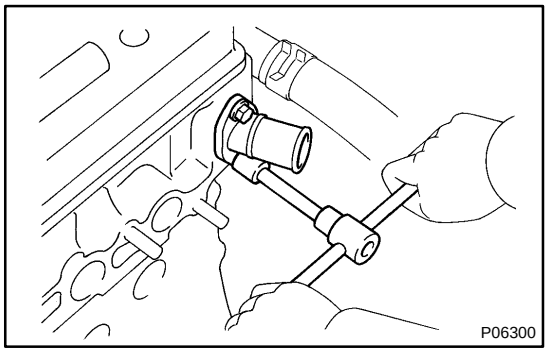

13. REMOVE WATER OUTLET

(a) Disconnect the radiator upper hose from the water outlet.

(b) Remove the 2 bolts and water outlet.

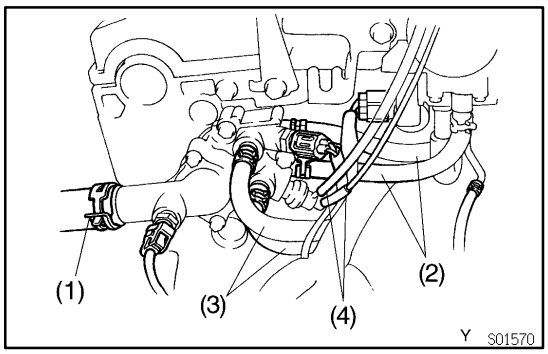

14. REMOVE WATER INLET AND INLET HOUSING ASSEMBLY

(a) Disconnect these connectors:
- ECT sensor connector
- ECT switch connector
- IAC valve connector

(b) Disconnect these hoses:
(1) Radiator outlet hose
(2) Water bypass hoses
(3) Heater water hoses
(4) 2 EVAP TVV vacuum hoses

(c) Remove the bolt, 2 nuts, the water inlet and inlet housing assembly.

15. DISCONNECT GROUND STRAP CONNECTOR

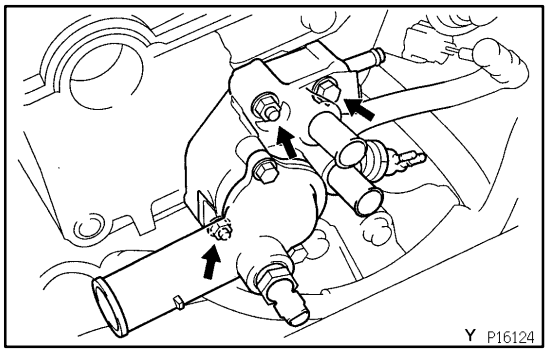

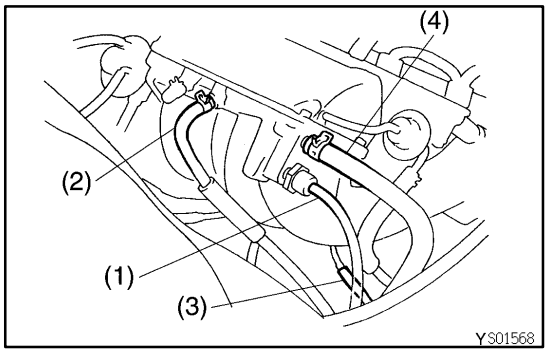

16. DISCONNECT HOSES

Disconnect these hoses from the intake chamber:
(1) MAP sensor vacuum hose from gas filtert on intake manifold
(2) PS air hose from intake manifold
(3) PS air hose from air pipe
(4) Brake booster vacuum hose from intake manifold

17. REMOVE EGR VACUUM MODULATOR AND VSV

18. REMOVE INTAKE MANIFOLD STAY

19. REMOVE AIR PIPE

20. REMOVE THROTTLE BODY (See page SF-31)

21. REMOVE AIR INTAKE CHAMBER COVER (See page SF-19)

22. REMOVE DELIVERY PIPE AND INJECTORS (See page SF-19)

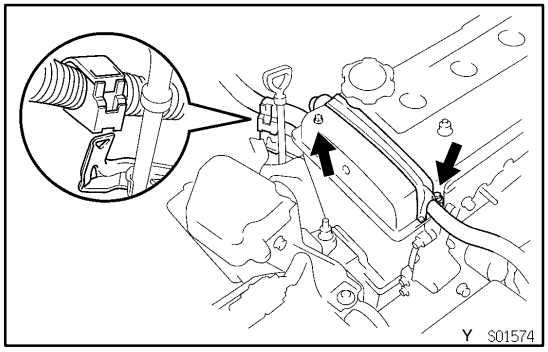

23. DISCONNECT ENGINE WIRE

(a) Disconnect these connectors:
- w/ A/C:
  A/C compressor connector
- Oil pressure switch connector
- Crankshaft position sensor connector
- Injector connector

(b) Remove the 2 bolts and engine wire cover, and disconnect the engine wire from the cylinder head cover.

(c) Disconnect the clamp from the wire harness bracket.

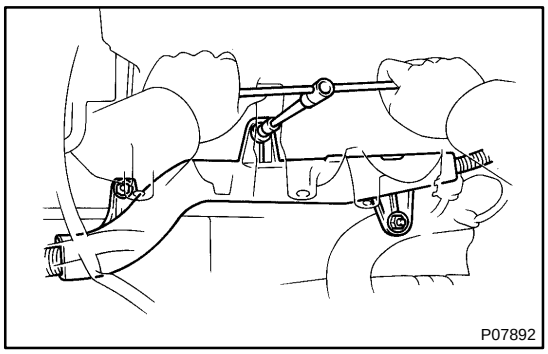

(d) Remove the bolt and 2 nuts, and disconnect the engine wire.

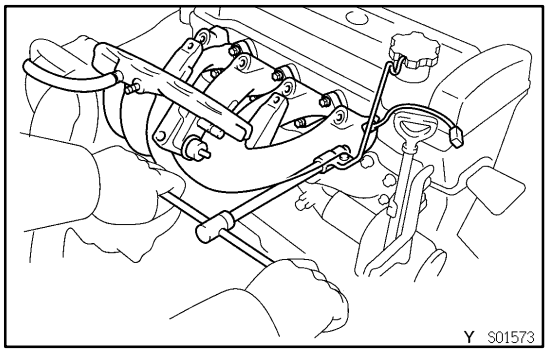

24. REMOVE INTAKE MANIFOLD

Remove the 7 bolts, 4 nuts, ground strap, intake manifold and 2 gaskets.

25. REMOVE RH ENGINE MOUNTING INSULATOR (See page EM-13)

26. REMOVE CYLINDER HEAD COVER

Remove the 4 cap nuts, seal washers, head cover and gasket.

27. REMOVE SEMI-CIRCULAR PLUG

28. REMOVE SPARK PLUGS

29. REMOVE TIMING BELT COVER AND TIMING BELT (See page EM-13)

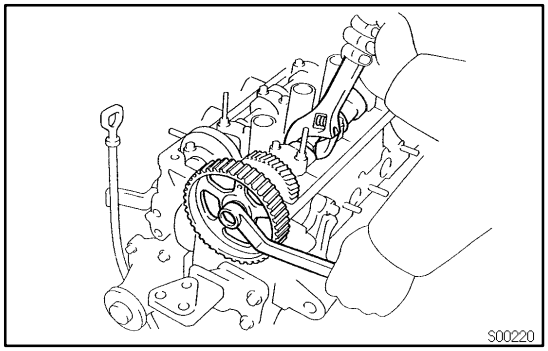

30. REMOVE CAMSHAFT TIMING PULLEY (See page EM-13)

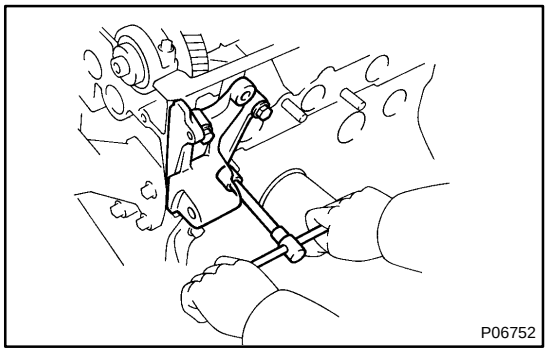

31. REMOVE GENERATOR BRACKET

Remove the 3 bolts and bracket.

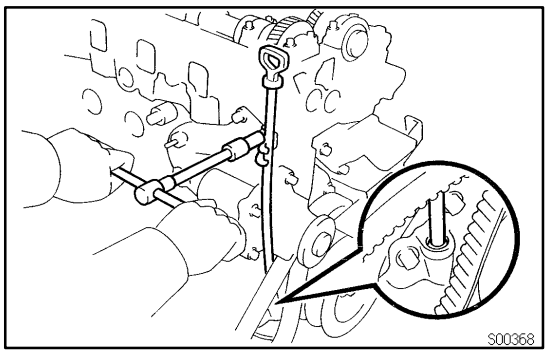

32. REMOVE OIL DIPSTICK GUIDE AND DIPSTICK

(a) Disconnect the crankshaft position sensor connector from the dipstick guide.

(b) Remove the mounting bolt and pull out the dipstick guide and gauge.

(c) Remove the O-ring from the dipstick guide.

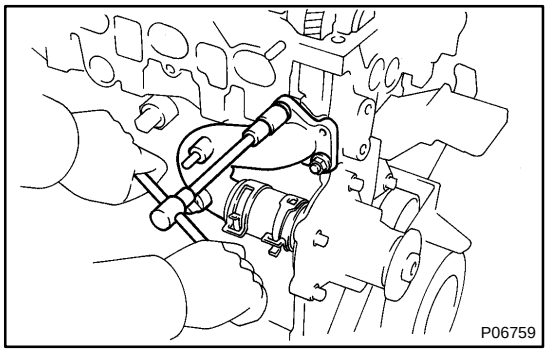

33. REMOVE WATER INLET NO.2

Remove the 2 nuts and water inlet from the water inlet hose.

34. REMOVE INTAKE CAMSHAFTS

NOTICE:

Since the thrust clearance of the camshaft is small, the camshaft must be kept level while it is being removed. If the camshaft is not kept level, the portion of the cylinder head receiving the shaft thrust may crack or be damaged, causing the camshaft to seize or break. To avoid this, these steps should be carried out.

(a) Set the exhaust camshaft so the knock pin is slightly above the top of the cylinder head.

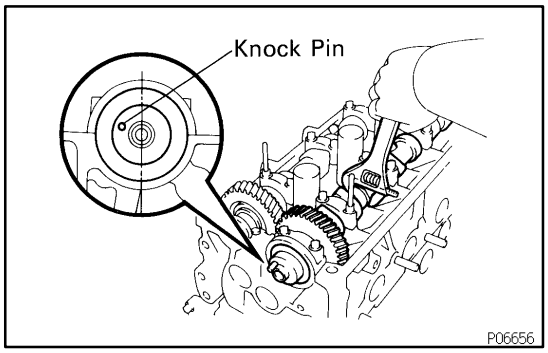

HINT:

The above angle allows the No.1 and No.3 cylinder cam lobes of the intake camshaft to push their valve lifters evenly.

(b) Remove the 2 bolts and front bearing cap.

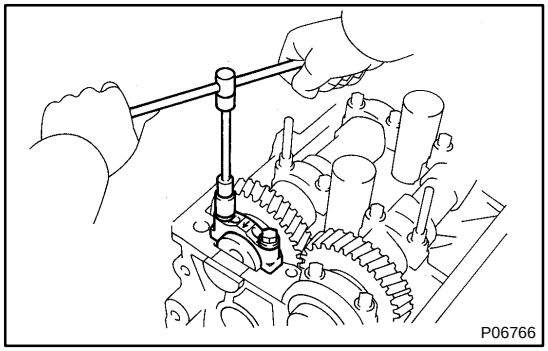

(c) Secure the intake camshaft sub-gear to the main gear with a service bolt.

Recommended service bolt:
Thread diameter: 6 mm
Thread pitch: 1.0 mm
Bolt length: 16 - 20 mm (0.63 - 0.79 in.)

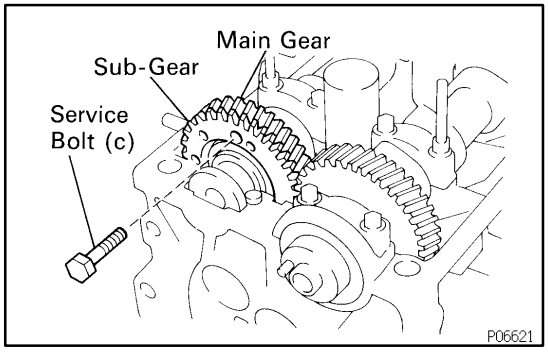

HINT:

When removing the camshaft, make certain that the torsional spring force of the sub-gear has been eliminated by the above operation.

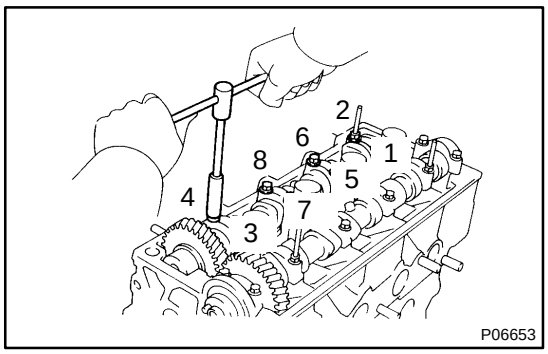

(d) Uniformly loosen and remove the 8 bearing cap bolts in several passes in the sequence shown.
(e) Remove the 4 bearing caps and camshaft.

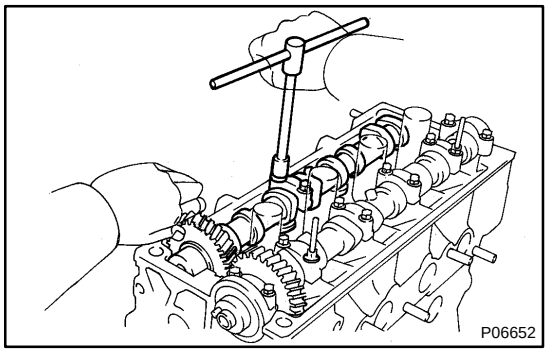

HINT:
If the camshaft is not lifted out straight and level, reinstall the No.2 bearing cap with the 2 bolts.
(f) Then alternately loosen and remove the bearing cap bolts with the camshaft gear pulled up.

NOTICE:
Do not pry on or attempt to force the camshaft with a tool or other object.

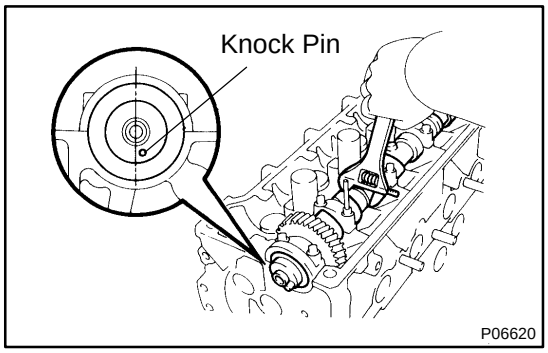

35. REMOVE EXHAUST CAMSHAFTS
(a) Set the exhaust camshaft so the knock pin is located slightly counterclockwise from the vertical axis of the camshaft.

HINT:
The above angle allows the No.1 and No.3 cylinder cam lobes of exhaust camshaft to push their valve lifters evenly.

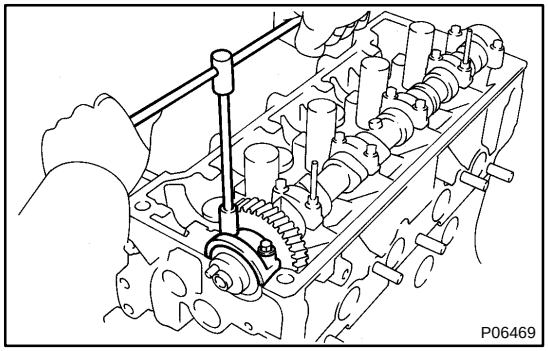

(b) Remove the 2 bolts, front bearing cap and oil seal.

NOTICE:
The front bearing cap is difficult to remove, do not use a hammer and chisel as this may damage the bearing cap.

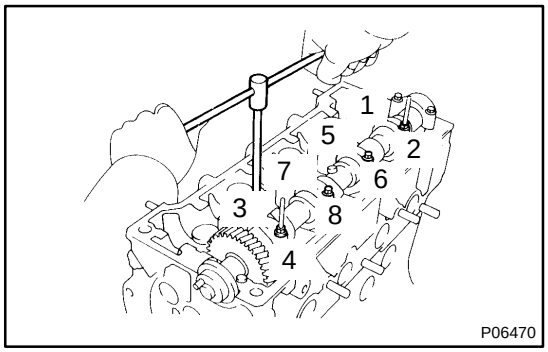

(c) Uniformly loosen and remove the 8 bearing cap bolts in several passes in the sequence shown.
(d) Remove the 4 bearing caps and camshaft.

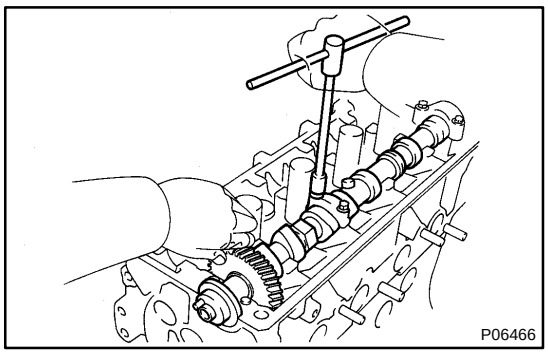

HINT:
If the camshaft is not being lifted out straight and level, reinstall the No.3 bearing cap with the 2 bolts.

(e) Then alternately loosen and remove the 2 bearing cap bolts with the camshaft gear pulled up.

NOTICE:
Do not pry on or attempt to force the camshaft with a tool or other object.

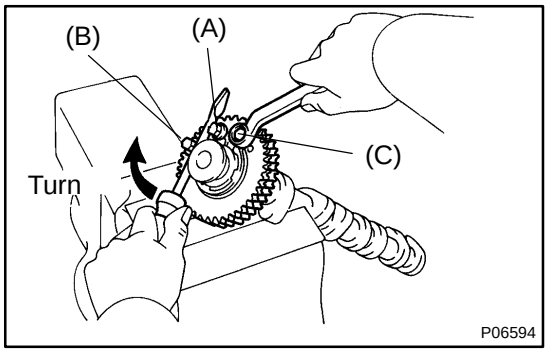

36. DISASSEMBLE INTAKE CAMSHAFT

(a) Mount the hexagonal wrench head portion of the camshaft in a vise.

NOTICE:
Be careful not to damage the camshaft.

(b) Insert service bolts (A) and (B) into the service holes of the camshaft sub-gear.

(c) Using a screwdriver, turn the sub-gear clockwise, and remove service bolt (C).

NOTICE:
Be careful not to damage the camshaft.

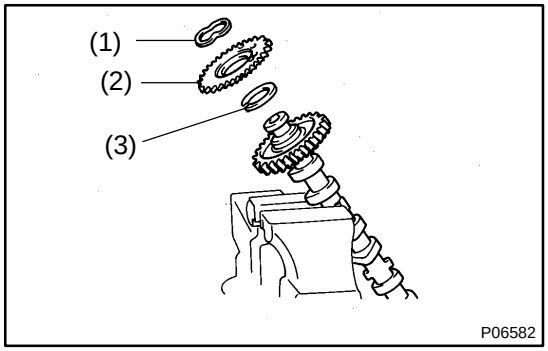

(d) Using snap ring pliers, remove the snap ring.

(e) Remove the following parts:
- (1) Wave washer
- (2) Camshaft sub-gear
- (3) Camshaft gear spring

37. REMOVE SEMI-CIRCULAR PLUG

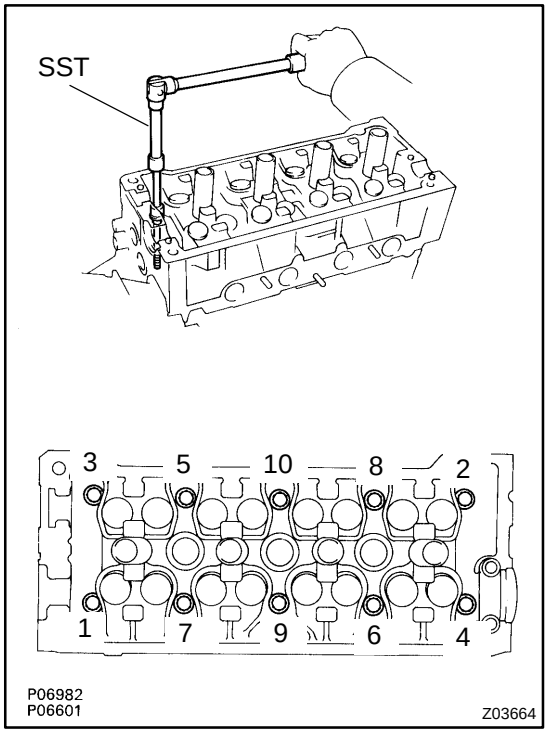

38. REMOVE CYLINDER HEAD

(a) Using SST, uniformly loosen and remove the 10 cylinder head bolts, in several passes, in the sequence shown.
SST 09205-16010

NOTICE:

Cylinder head warpage or cracking could result from removing bolts in incorrect order.

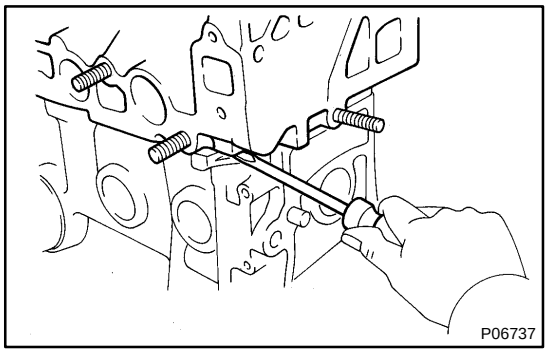

(b) Lift the cylinder head from the dowels on the cylinder block and place the head on wooden blocks on a bench.

HINT:

If the cylinder head is difficult to lift off, pry with a screwdriver between the cylinder head and block saliences.

NOTICE:

Be careful not to damage the contact surfaces of the cylinder head and cylinder block.

CO0ZQ-01

REMOVAL

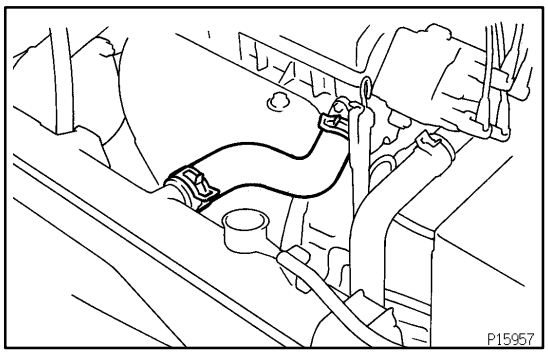

1. REMOVE NO.1 COOLANT

(a) Drain engine coolant.

(b) Canada only:
Disconnect the relay block No.6.
Remove the 2 bolts and disconnect the relay block.

(c) Remove the upper radiator hose.

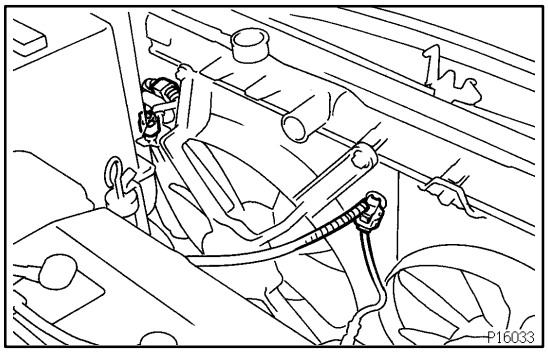

(d) Disconnect the connector and clamps.
Disconnect the connector and clamps:
- No.1 cooling fan connector
- No.1 cooling fan wire clamp
- Oxygen sensor wire clamp

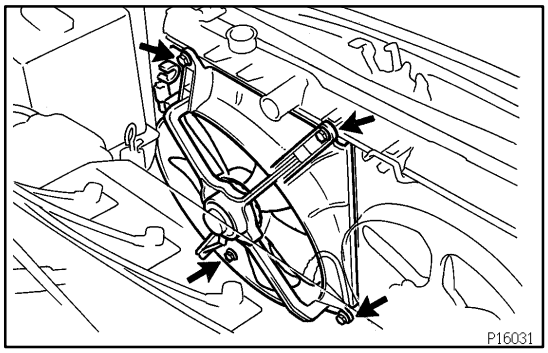

(e) Remove the No.1 cooling fan.
Remove the 4 bolts and cooling fan.
Torque: 5.0 N·m (50 kgf·cm, 43 in.·lbf)

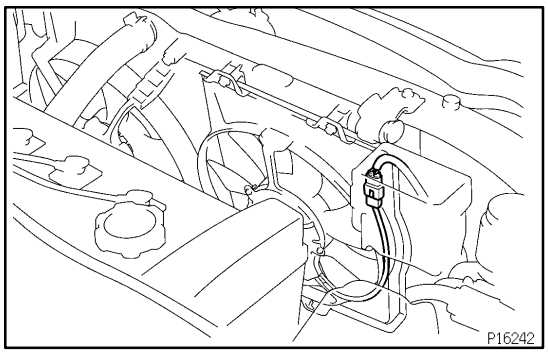

2. REMOVE NO.2 COOLING FAN

(a) Disconnect the cooling fan connector.

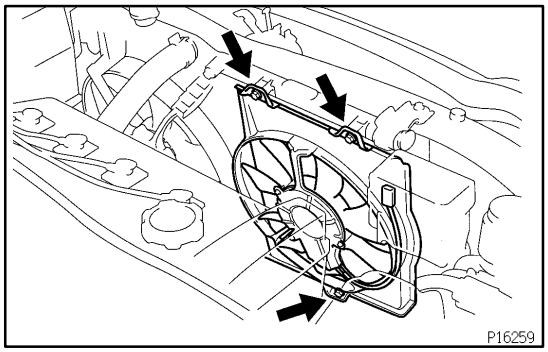

(b) Remove the 3 bolts and cooling fan.
Torque: 5.0 N·m (50 kgf·cm, 43 in.·lbf)

EM1C9-02

REMOVAL

1. REMOVE BATTERY AND TRAY

2. REMOVE ENGINE HOOD AND UNDER COVERS

3. DRAIN ENGINE COOLANT, ENGINE OIL AND TRANSAXLE OIL

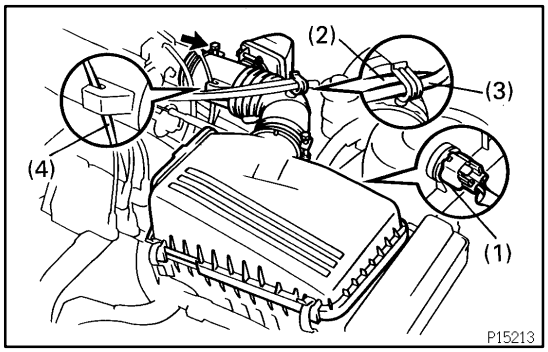

4. REMOVE AIR CLEANER

(a) Disconnect the connector, cables and hose:
- (1) IAT sensor connector
- (2) Accelerator cable from clamp on air cleaner hose
- (3) Cruise control actuator cable from clamp on air cleaner hose
- (4) Vacuum hose (from port P of throttle body) from air cleaner hose

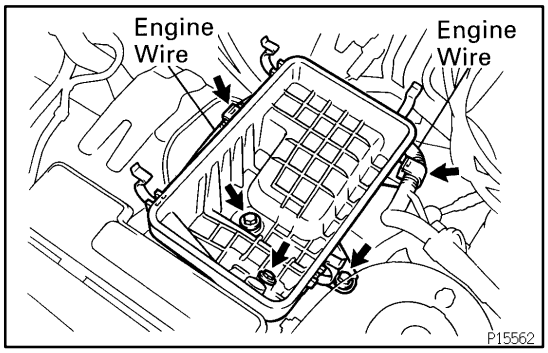

(b) Disconnect the 4 clamps, and disconnect the air cleaner cap from the air cleaner case.

(c) Loosen the hose clamp, and disconnect the air cleaner hose from the throttle body.

(d) Remove the air cleaner cap and air cleaner hose assembly.

(e) Remove the air filter.

(f) Disconnect the 2 engine wires from the clamps on the air cleaner case.

(g) Remove the 3 bolts and air cleaner case.

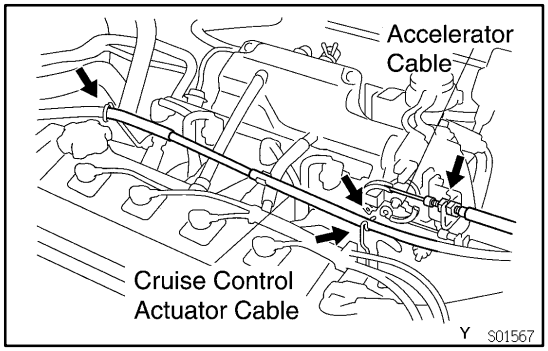

5. DISCONNECT ACCELERATOR CABLE FROM THROTTLE BODY AND CABLE BRACKET

6. DISCONNECT CRUISE CONTROL ACTUATOR CABLE FROM CLAMPS

7. REMOVE RADIATOR ASSEMBLY
(See page CO-17)

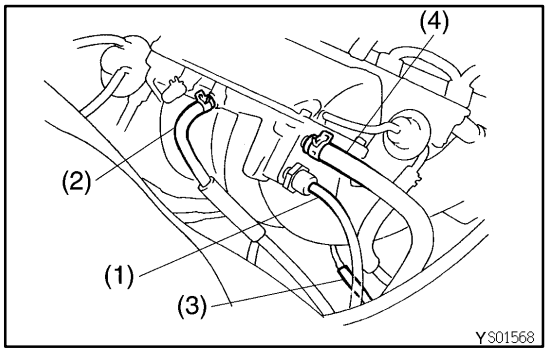

8. DISCONNECT CONNECTOR, WIRE, CABLE, STRAP AND HOSES

Disconnect the connector, wire, cable, strap and hoses:
- (1) MAP sensor vacuum hose from gas filter on intake manifold
- (2) PS air hose from intake manifold
- (3) PS air hose from air pipe
- (4) Brake booster vacuum hose from intake manifold

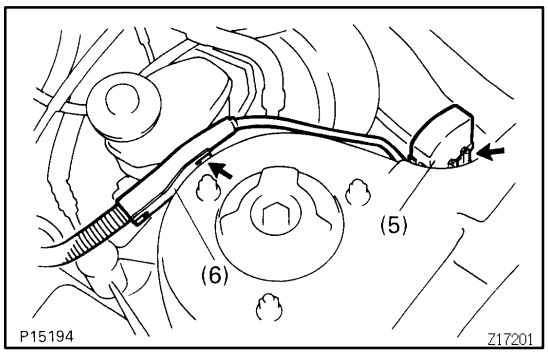

(5) DLC1 from bracket
(6) Engine wire protector from bracket

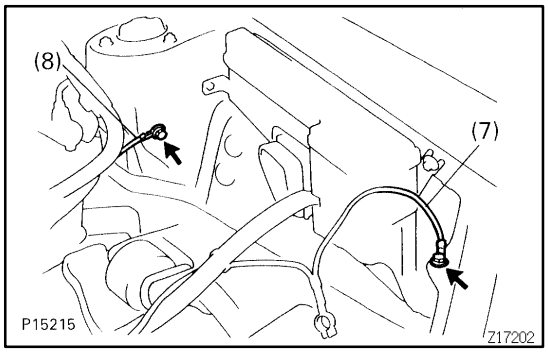

(7) Ground cable from body
(8) Ground strap from body

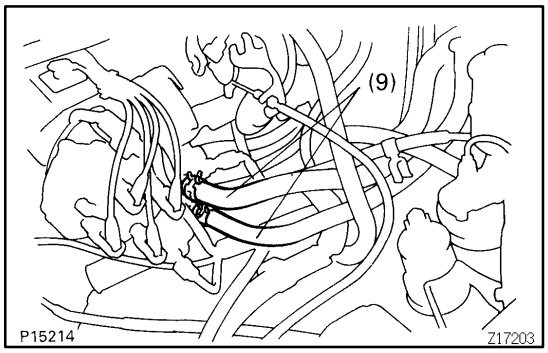

(9) 2 heater hoses from water inlet housing

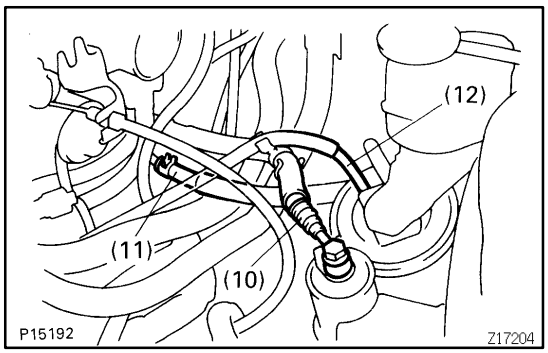

(10) Fuel inlet hose from fuel filter
(11) Fuel return hose from return pipe
(12) EVAP hose from charcoal canister

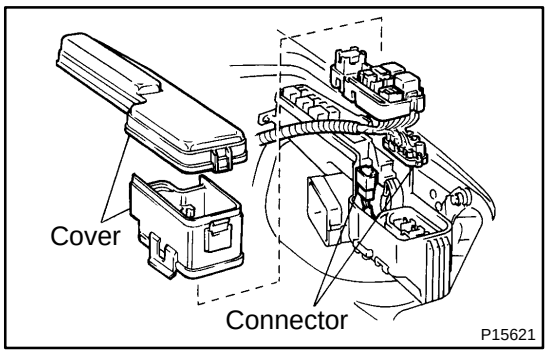

9. DISCONNECT ENGINE WIRE FROM ENGINE COMPARTMENT RELAY BOX

(a) Remove the 2 relay box covers.

(b) Disconnect the 2 connectors.

10. DISCONNECT ENGINE WIRE FROM CABIN

(a) Remove these parts:
- Scuff plate
- Cowl side trim
- Lower instrument panel finish panel

(b) Take out the front side of the floor carpet.

(c) Disconnect the wire and connectors:
(1) Engine wire from clamp on ECM bracket
(2) 3 ECM connectors
(3) Circuit opening relay connector
(4) 3 connectors from the connectors on bracket
(5) A/C amplifier connector

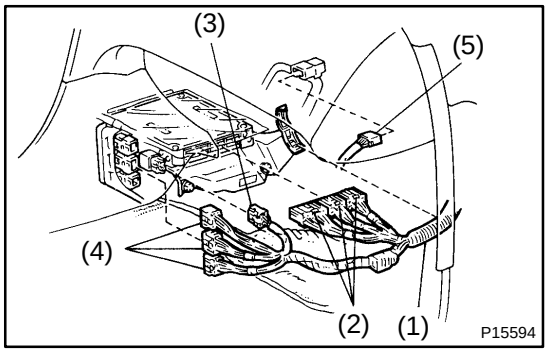

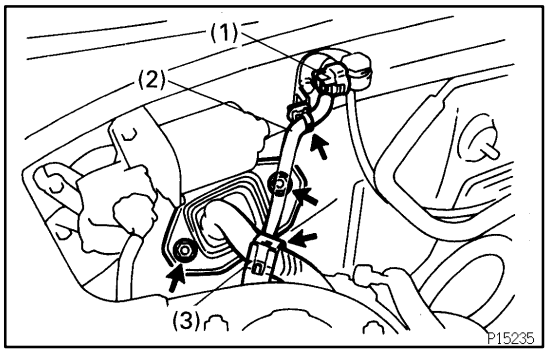

(d) Disconnect the connector, wire and clamp:
(1) MAP sensor connector
(2) MAP sensor wire from clamp on bracket
(3) Engine wire clamp from the bracket.

(e) Remove the 2 nuts holding the engine wire retainer to the cowl panel.

(f) Pull out the engine wire from the cabin.

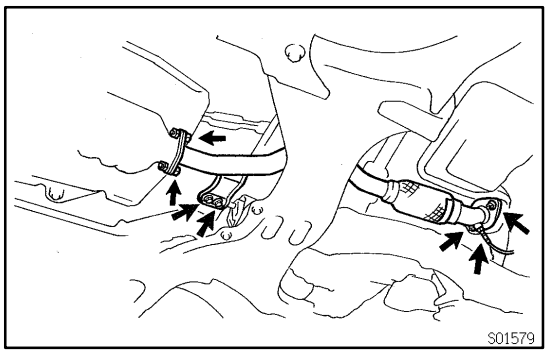

11. REMOVE FRONT EXHAUST PIPE

(a) Disconnect the oxygen sensor connector (bank 1 sensor 1).

(b) Remove the 2 bolts holding the front exhaust pipe to the exhaust pipe support bracket.

(c) Remove the 2 bolts and 2 nuts holding the front exhaust pipe to the TWC.

(d) Remove the 3 nuts holding the front exhaust pipe to the exhaust manifold.

(e) Remove the front exhaust pipe and 2 gaskets.

12. REMOVE DRIVE SHAFTS (See page SA-18)

13. REMOVE GENERATOR DRIVE BELT

(a) Loosen the pivot bolt, adjusting lock bolt and adjusting bolt.

(b) Remove the drive belt.

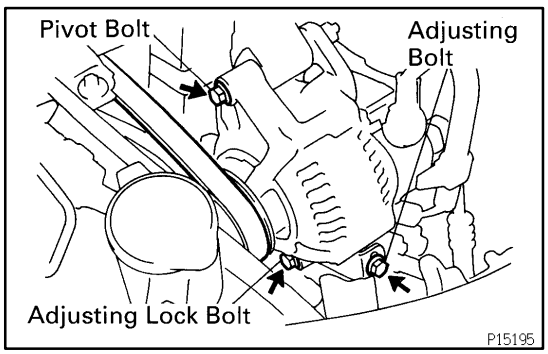

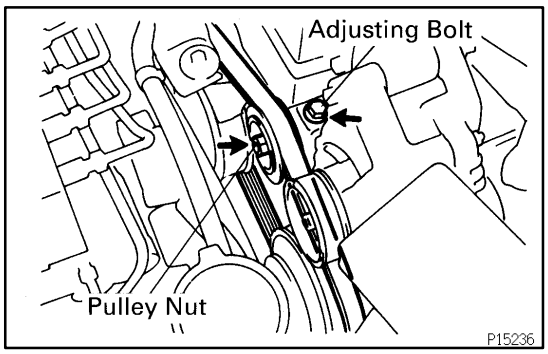

14. DISCONNECT A/C COMPRESSOR FROM ENGINE

(a) Loosen the pulley nut and adjusting bolt.

(b) Remove the drive belt.

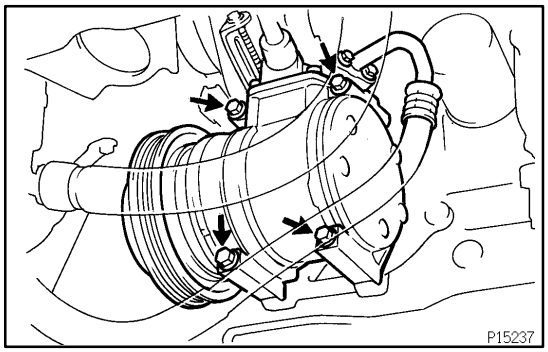

(c) Disconnect the A/C compressor connector.

(d) Remove the 4 bolts, and disconnect the A/C compressor from the engine.

HINT:

Suspend the A/C compressor securely.

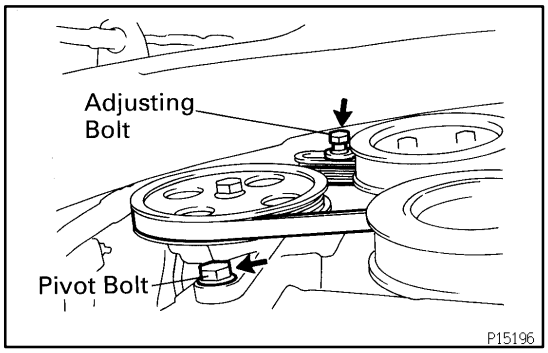

15. DISCONNECT PS PUMP FROM ENGINE

(a) Loosen the pivot bolt and adjusting bolt.

(b) Remove the drive belt.

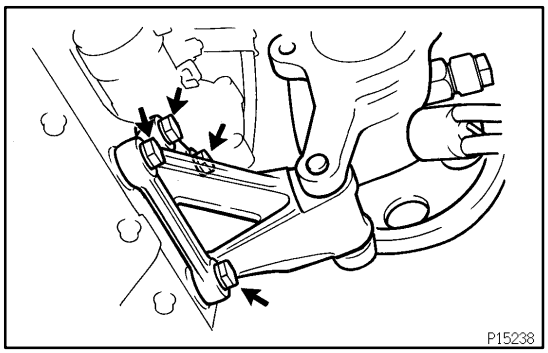

(c) Remove the 4 bolts, and disconnect the PS pump from the engine.

HINT:

Suspend the PS pump securely.

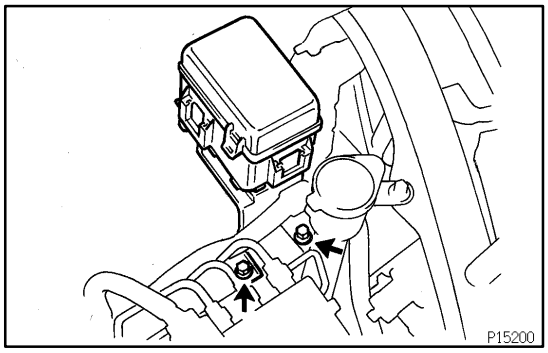

16. DISCONNECT RELAY BOX FOR A/C

Remove the 2 bolts, and disconnect the relay box from the body.

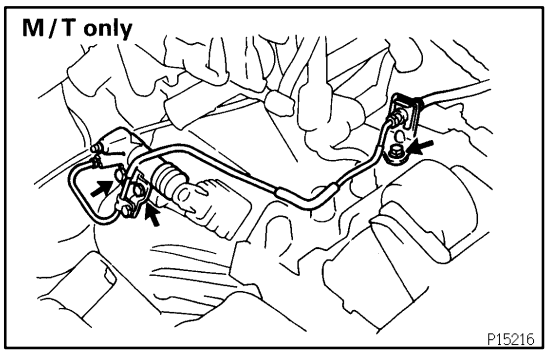

17. M/T:
DISCONNECT CLUTCH RELEASE CYLINDER FROM TRANSAXLE

(a) Remove the bolt, and disconnect the bracket from the transaxle.

(b) Remove the 2 bolts, and disconnect the release cylinder from the transaxle.

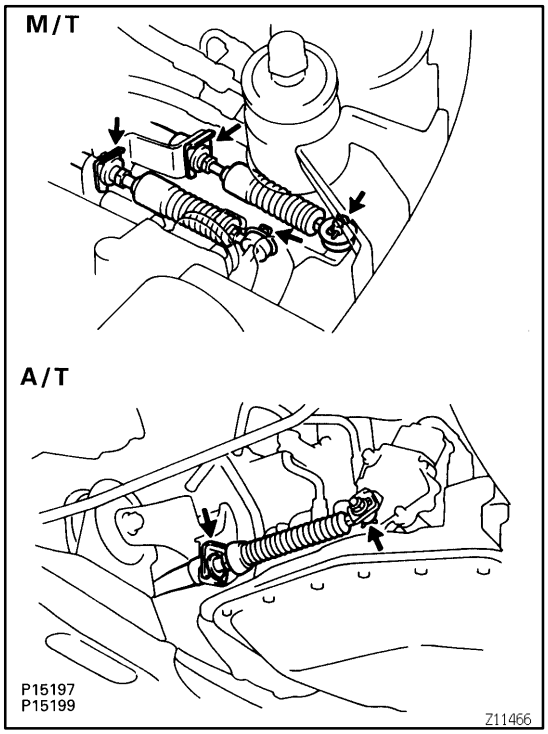

18. DISCONNECT TRANSAXLE CONTROL CABLE(S) FROM TRANSAXLE

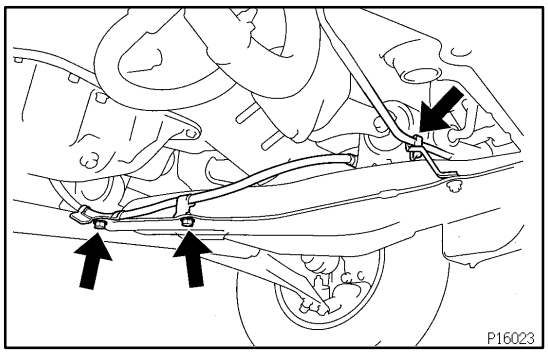

19. A/T:
DISCONNECT TRANSAXLE CONTROL CABLE FROM ENGINE MOUNTING CENTER MEMBER

Remove the 2 bolts and clamp, and disconnect the control cable from the center member.

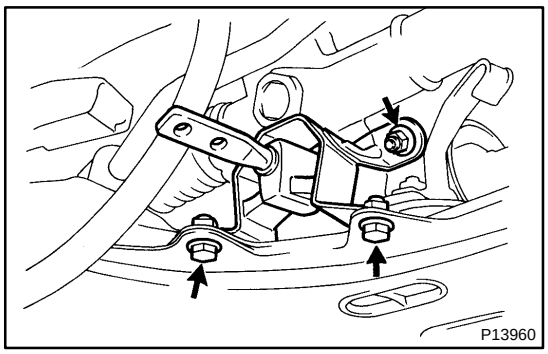

20. REMOVE EXHAUST PIPE SUPPORT BRACKET

Remove the 2 bolts, nut and support bracket.

21. REMOVE ENGINE MOUNTING CENTER MEMBER

(a) Remove the 2 dust covers from the rear side of the center member.

(b) Disconnect the A/C pipe from the bracket.

(c) Remove the bolt and nut holding the front engine mounting bracket to the mounting insulator.

(d) Remove the bolt holding the rear engine mounting bracket to the mounting insulator.

(e) Remove the bolt and 2 nuts holding the rear engine mounting insulator to the front suspension member.

(f) Remove the 2 bolts and rear engine mounting bracket.

(g) Remove the 2 bolts holding the center member to the body, and remove the center member and rear engine mounting insulator.

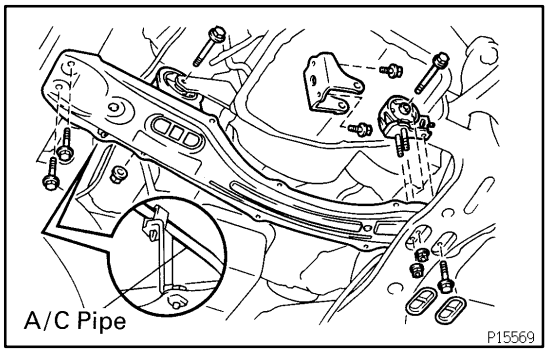

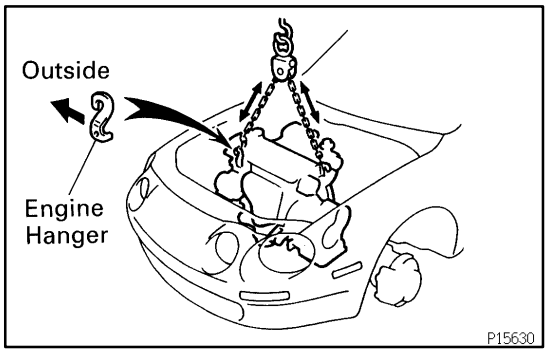

22. REMOVE ENGINE AND TRANSAXLE ASSEMBLY FROM VEHICLE

(a) Install a engine hanger No.1 in the correct direction.

Part No.:
Engine hanger No.1 12281-15050
Bolt 90119-10062
Torque: 27 N·m (280 kgf·cm, 20 ft·lbf)

(b) Attach the engine chain hoist to the engine hangers.

CAUTION:
Do not attempt to hang the engine by hooking the chain to any other part.

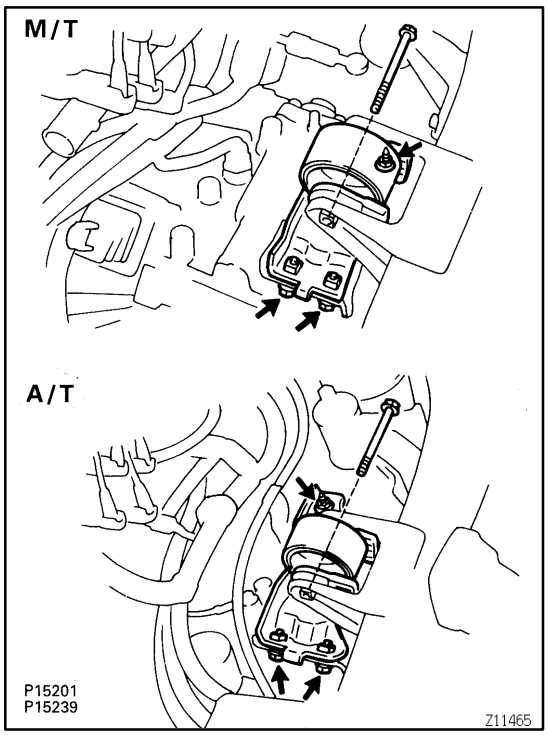

(c) Remove the 2 bolts and nut, and disconnect the LH engine mounting bracket from the mounting insulator.
(d) Remove the through bolt and LH engine mounting insulator.

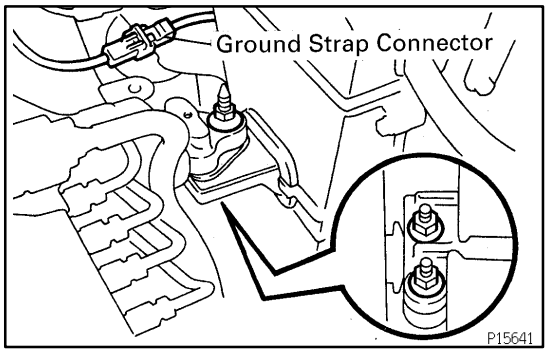

(e) Disconnect the ground strap connector.
(f) Remove the bolt and 2 nuts, and disconnect the RH engine mounting bracket from the mounting insulator.

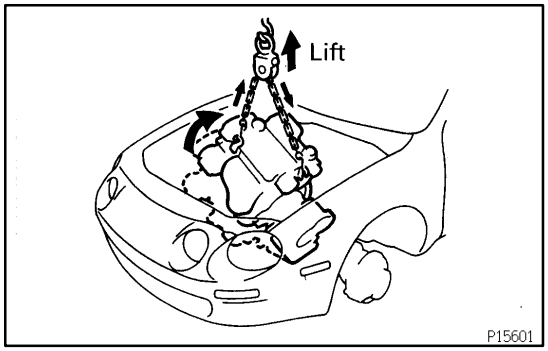

(g) Lift the engine out of the vehicle slowly and carefully.

HINT:

Make sure the engine is clear of all wiring, hoses and cables.

(h) Place the engine and transaxle assembly onto the stand.

23. SEPARATE ENGINE AND TRANSAXLE
(C52: See page MX-4)
(A246E: See page AX-14)

SF1R6-01

REMOVAL

1. DISCONNECT VACUUM SENSING HOSE FROM FUEL PRESSURE REGULATOR

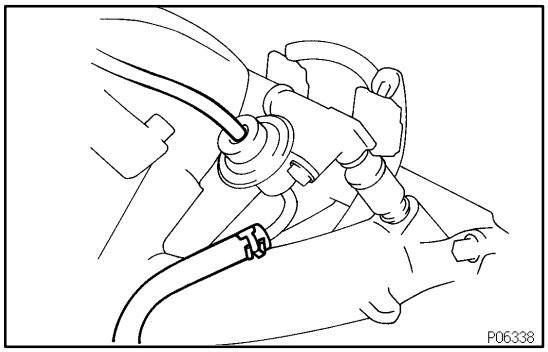

2. DISCONNECT FUEL RETURN PIPE FROM FUEL PRESSURE REGULATOR

CAUTION:

Put a suitable container or shop towel under the pressure regulator.

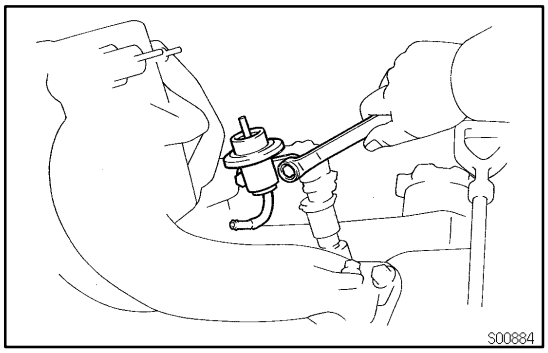

3. REMOVE FUEL PRESSURE REGULATOR

(a) Remove the 2 bolts, and pull out the pressure regulator.

Torque: 9.3 N·m (95 kgf·cm, 82 in.·lbf)

(b) Remove the O-ring from the pressure regulator.

HINT:

At the time of installation, plase refer to the following item.

- Use a new O-ring.

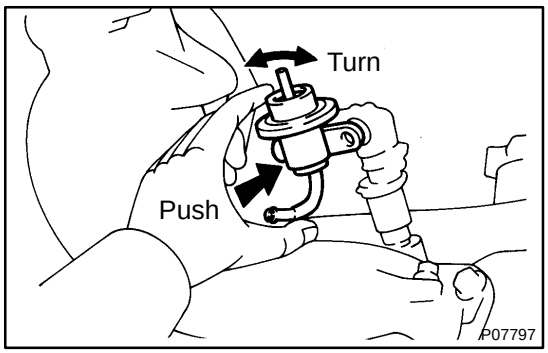

- While turning the pressure reaulator left and right, install it to the delivery pipe.

CH0E5-01

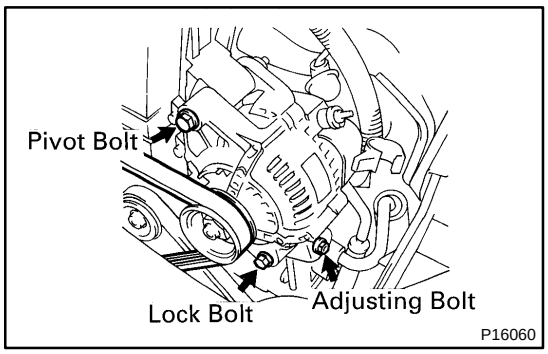

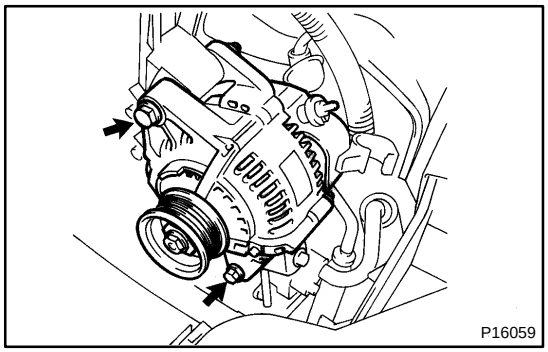

REMOVAL

REMOVE GENERATOR

(a) Disconnect the wire from the 2 clamps on the generator.
(b) Disconnect the generator connector.
(c) Remove the rubber cap and nut, and disconnect the generator wire.
(d) Loosen the adjusting lock bolt, adjusting bolt and pivot bolt.
(e) Remove the drive belt.
(f) Remove the adjusting lock bolt, pivot bolt. and nut.
Torque:
Pivot bolt: 61 N·m (600 kgf·cm, 45 ft·lbf)
Adjusting lock bolt: 19 N·m (185 kgf·cm, 14 ft·lbf)
(g) Remove the generator.

SF1BY-01

REMOVAL

1. REMOVE AIR CLEANER HOSE AND CAP

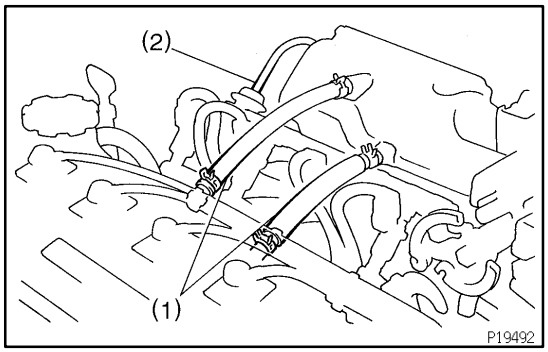

2. DISCONNECT THROTTLE BODY AND AIR INTAKE CHAMBER COVER ASSEMBLY

(a) Disconnect these the hoses and connectors:
- (1) 2 PCV hoses from cylinder head cover
- (2) Vacuum sensing hose from fuel pressure regulator

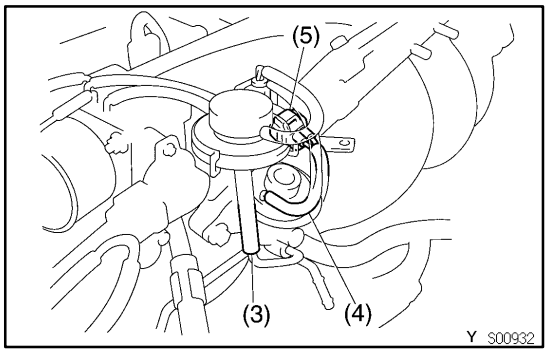

- (3) EGR hose from EGR valve
- (4) Vacuum hose from EGR valve
- (5) VSV (for EGR) connector

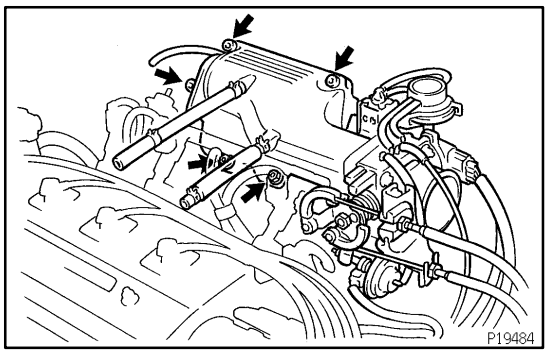

(b) Using a 6 mm hexagon wrench, remove the 3 bolts and 2 nuts, and disconnect the throttle body and chamber cover assembly from the intake manifold.

(c) Remove the gasket.

3. DISCONNECT INJECTOR CONNECTORS

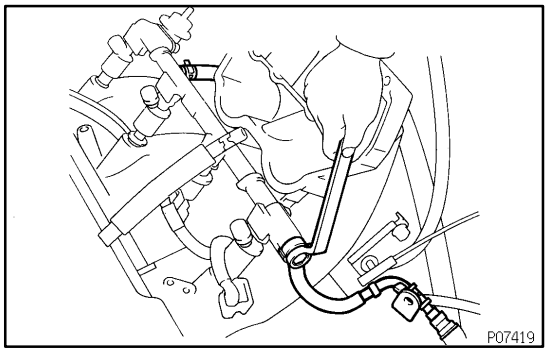

4. DISCONNECT FUEL INLET HOSE FROM DELIVERY PIPE

Remove the union bolt and 2 gasket, and disconnect the inlet hose from the delivery pipe.

HINT:
- Put a suitable container or shop towel under the delivery pipe.
- Slowly loosen the union bolt.

5. DISCONNECT FUEL RETURN HOSE FROM FUEL PRESSURE REGULATOR

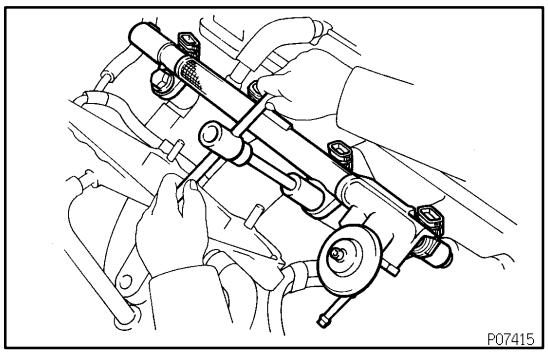

6. REMOVE DELIVERY PIPE AND INJECTORS

(a) Remove the 2 bolts and delivery pipe together with the 4 injectors.

NOTICE:

Be careful not to drop the injectors when removing the delivery pipe.

(b) Remove the 4 insulators and 2 spacers from the intake manifold.

(c) Pull out the 4 injectors from the delivery pipe.

(d) Remove the O-ring and grommet from each injector.

LU0JN-02

REMOVAL

HINT:

When repairing the oil pump, the oil pan and strainer should be removed and cleaned.

1. **REMOVE HOOD**
2. **DRAIN ENGINE OIL**
3. **REMOVE RH FRONT WHEEL**
4. **REMOVE ENGINE UNDER COVERS**
5. **REMOVE FRONT EXHAUST PIPE**
   (See page EM-58)
6. **A/T:**
   DISCONNECT TRANSAXLE CONTROL CABLE FROM ENGINE MOUNTING CENTER MEMBER
   (See page EM-58)
7. **w/ A/C:**
   DISCONNECT A/C PRESSURE PIPE FROM ENGINE MOUNTING CENTER MEMBER CLAMP
8. **REMOVE FRONT EXHAUST PIPE SUPPORT BRACKET**
   (See page EM-58)
9. **REMOVE REAR ENGINE MOUNTING INSULATOR AND ENGINE MOUNTING CENTER MEMBER**
   (See page EM-58)
10. **INSTALL ENGINE HANGER**
    (See page EM-58)
11. **SUSPEND ENGINE WITH ENGINE SLING DEVICE**
12. **REMOVE TIMING BELT**
    (See page EM-13)
13. **REMOVE OIL DIPSTICK GUIDE AND DIPSTICK**
    (See page CO-5)

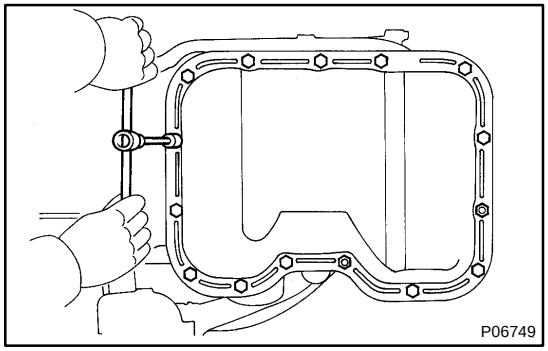

14. **REMOVE NO.2 OIL PAN**

(a) Remove the 13 bolts, 2 nuts and No.2 oil pan.

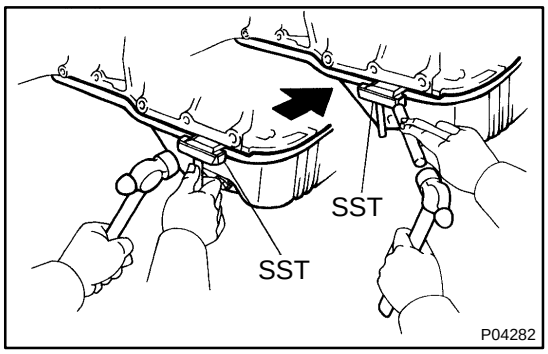

(b) Insert the blade of SST between the cylinder block and oil pan, and cut off applied sealer and remove the No.2 oil pan.
SST 09032-00100

NOTICE:
Do not use SST for the oil pump body side and rear oil seal retainer. Be careful not to damage the oil pan flange.

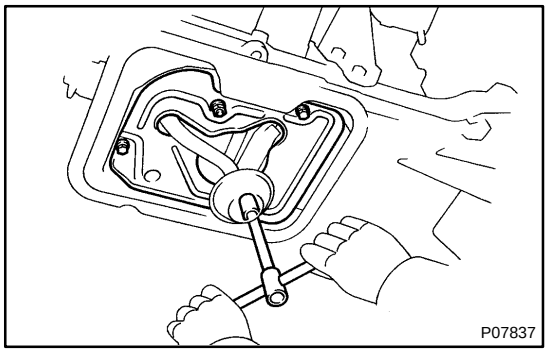

15. REMOVE OIL PAN BAFFLE PLATE
Remove the 2 bolts, 2 nuts and baffle plate.

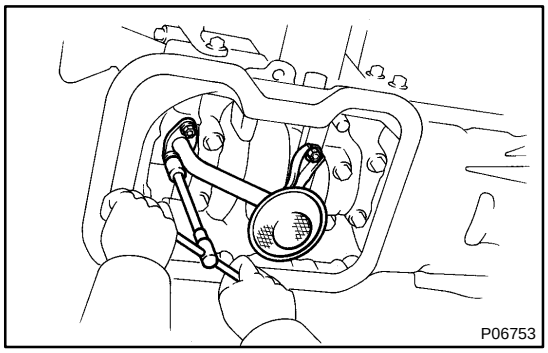

16. REMOVE OIL STRAINER
Remove the 3 nuts, oil strainer and gasket.

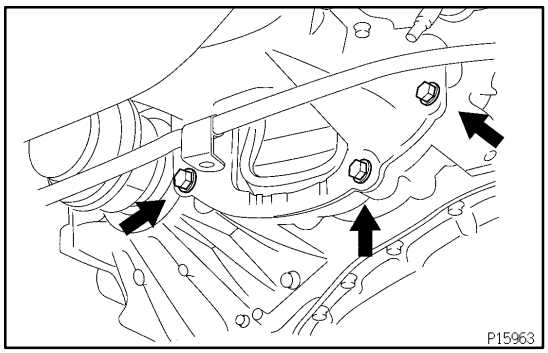

17. REMOVE NO.1 OIL PAN
(a) Remove the 3 bolts holding the No.1 oil pan to the transaxle.

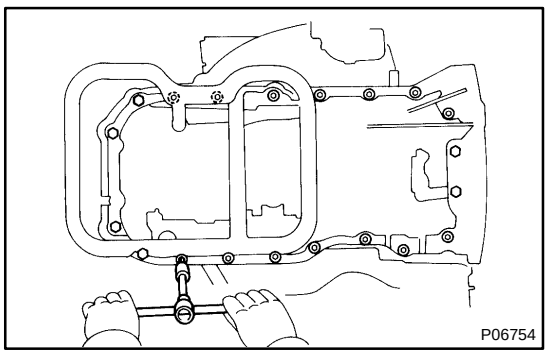

(b) Remove the 6 bolts.
(c) Using a 5 mm hexagon wrench, remove the 14 bolts and No.1 oil pan.

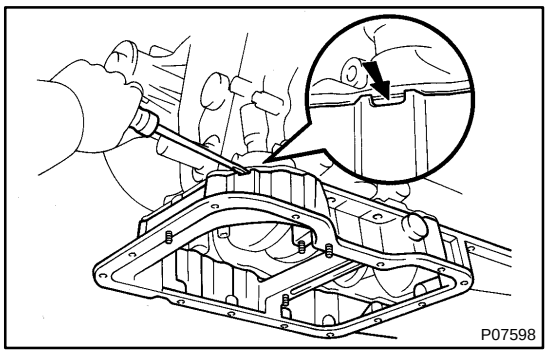

(d) Remove the No.1 oil pan by prying the portions between the cylinder block and No.1 oil pan with a screwdriver.

NOTICE:

Be careful not to damage the contact surfaces of the cylinder block and No.1 oil pan.

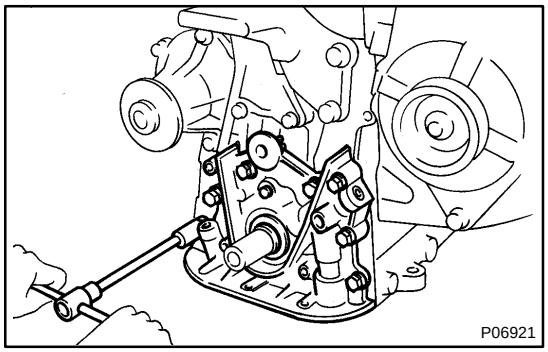

18. REMOVE OIL PUMP

(a) Remove the 7 bolts.

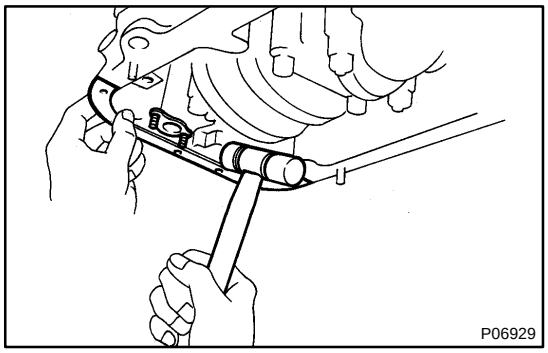

(b) Using a plastic-faced hammer, remove the oil pump by carefully tapping the oil pump body.

(c) Remove the gasket.

CO0ZG-02

REMOVAL

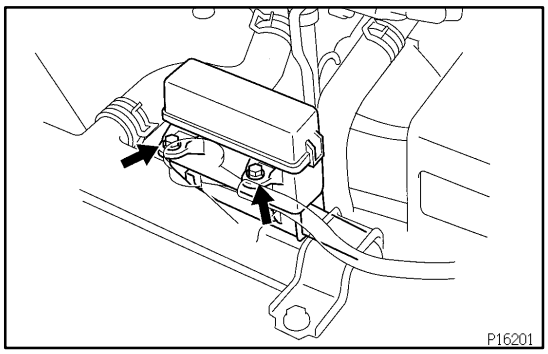

HINT:

Start the engine, and check for coolant and A/T fluid leaks.

1. DRAIN ENGINE COOLANT

2. Canada only:
DISCONNECT RELAY BLOCK NO.6

Remove the 2 bolts and disconnect the relay block.

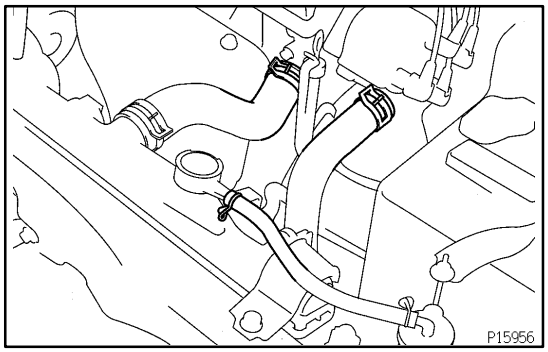

3. DISCONNECT RADIATOR HOSES

4. DISCONNECT COOLANT RESERVOIR HOSE

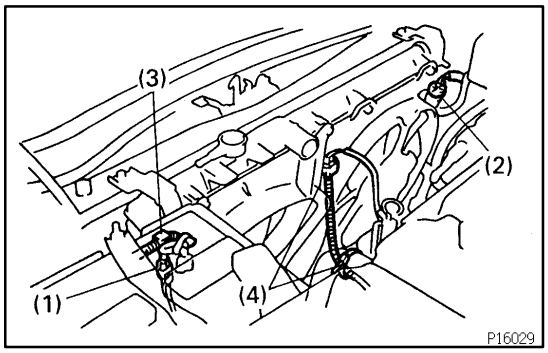

5. DISCONNECT CONNECTORS AND CLAMPS

Disconnect these connectors and clamps:

(1) No.1 cooling fan connector
(2) w/ A/C:
No.2 cooling fan connector
(3) No.1 cooling fan wire clamp
(4) 2 oxygen sensor wire clamps

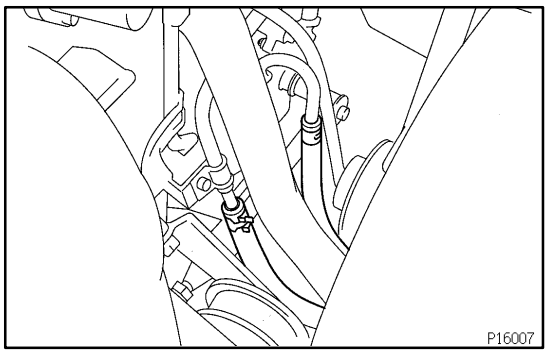

6. A/T:
DISCONNECT A/T OIL COOLER HOSES

HINT:

Check the A/T fluid level.

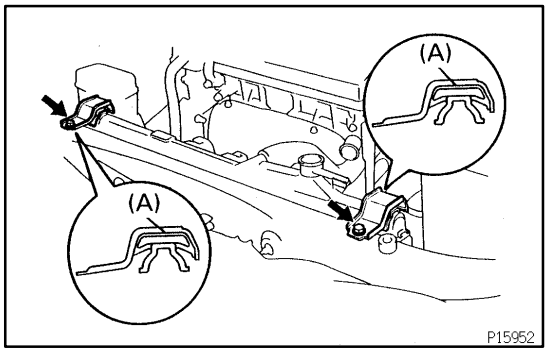

7. REMOVE RADIATOR ASSEMBLY

(a) Remove the 2 bolts and 2 upper supports.
Torque: 12.5 N·m (130 kgf·cm, 9 ft·lbf)

(b) Lift out the radiator.

HINT:

After installation, check that the rubber cushion (A) of the support is not depressed.

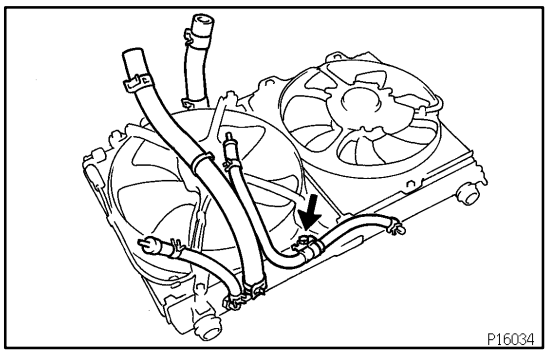

8. REMOVE RADIATOR HOSES

9. A/T:

REMOVE A/T OIL COOLER HOSES

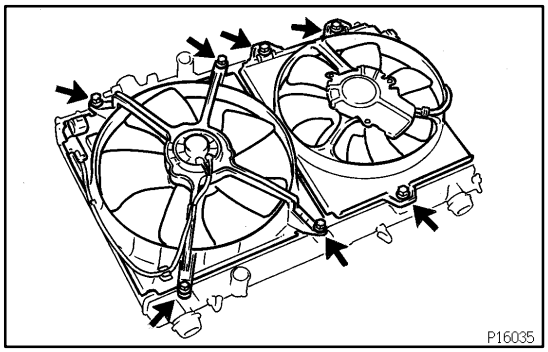

10. REMOVE NO.1 COOLING FAN FROM RADIATOR

Remove the 4 bolts and cooling fan.

Torque: 5.0 N·m (50 kgf·cm, 43 in.·lbf)

11. REMOVE NO.2 COOLING FAN FROM RADIATOR

Remove the 3 bolts and cooling fan.

Torque: 5.0 N·m (50 kgf·cm, 43 in.·lbf)

12. REMOVE LOWER RADIATOR SUPPORTS

Remove the 2 radiator supports.

CO0ZA-01

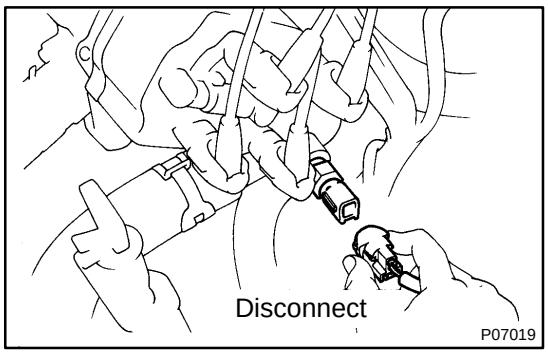

REMOVAL

HINT:

Removal of the thermostat would have an adverse effect, causing a lowering of cooling efficiency. Do not remove the thermostat, even if the engine tends to overheat.

1. DRAIN ENGINE COOLANT

2. DISCONNECT ENGINE COOLANT TEMPERATURE SWITCH CONNECTOR

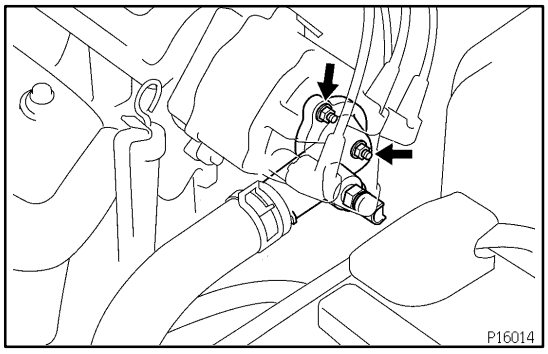

3. REMOVE WATER INLET AND THERMOSTAT

(a) Remove the 2 nuts and water inlet from the water inlet housing.

(b) Remove the thermostat.

(c) Remove the gasket from the thermostat.

SF1R7-01

REMOVAL

1. DRAIN ENGINE COOLANT

2. REMOVE AIR CLEANER CAP

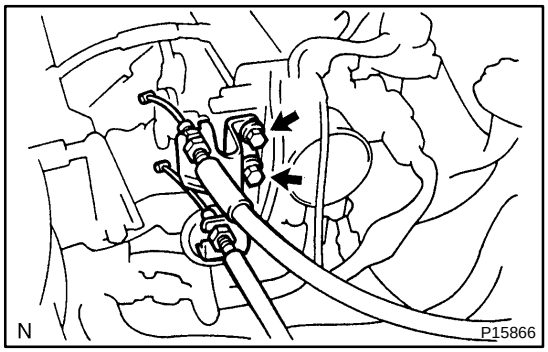

3. DISCONNECT ACCELERATOR CABLE BRACKET FROM THROTTLE BODY

(a) Disconnect the accelerator cable from the throttle linkage.

(b) A/T:
Disconnect the throttle cable from the throttle linkage.

(c) Remove the 2 bolts and cable bracket.
Torque: 11 N·m (115 kgf·cm, 8 ft·lbf)

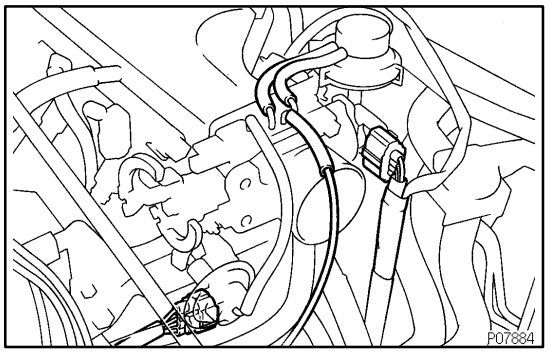

4. REMOVE THROTTLE BODY

(a) Disconnect the 2 EGR vacuum hoses.

(b) Disconnect the EVAP vacuum hose.

(c) Disconnect the TP sensor connector.

(d) Disconnect the IAC valve connector.

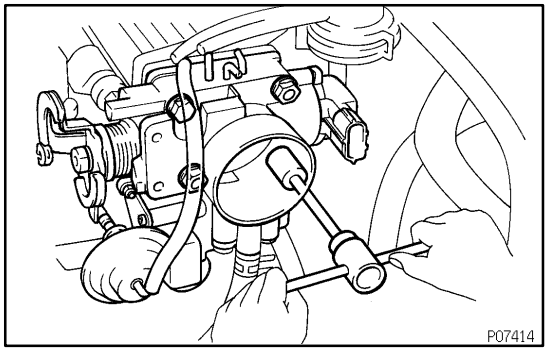

(e) Remove the 2 bolts and 2 nuts.
Torque: 22 N·m (220 kgf·cm, 16 ft·lbf)

(f) Disconnect the throttle body from the intake manifold.

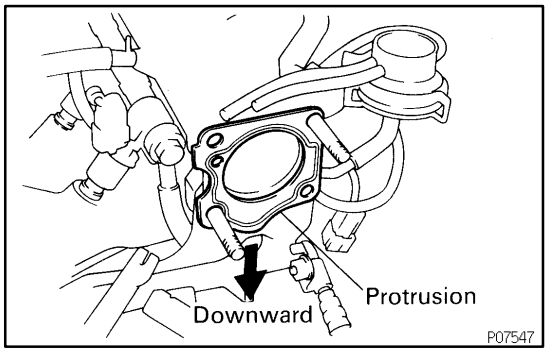

(g) Remove the gasket.

HINT:

At the time of installation, attach a new gasket to the intake manifold, facing the protrusion downward.

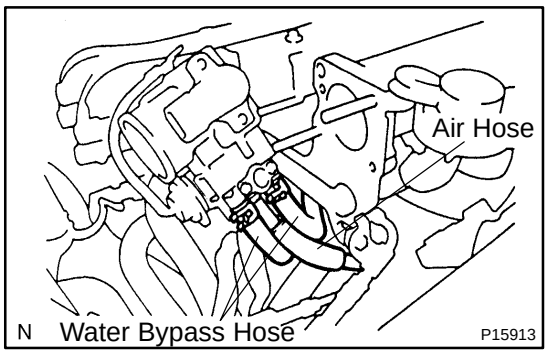

(h) Disconnect 2 water hoses and air hose from the throttle body, and remove the throttle body:

EM1PA-01

REMOVAL

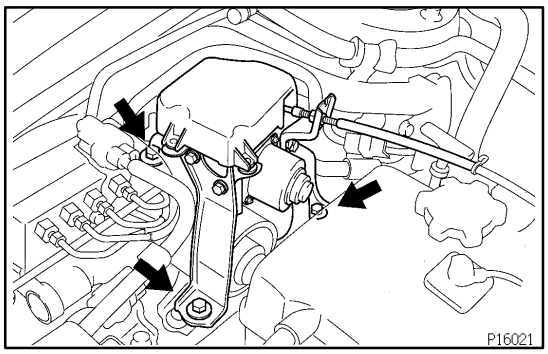

1. w/ CRUISE CONTROL SYSTEM:
REMOVE CRUISE CONTROL ACTUATOR

(a) Disconnect the actuator connector.

(b) Remove the 3 bolts, and disconnect the actuator with the bracket.

2. REMOVE RH FRONT WHEEL

3. REMOVE RH ENGINE UNDER COVER

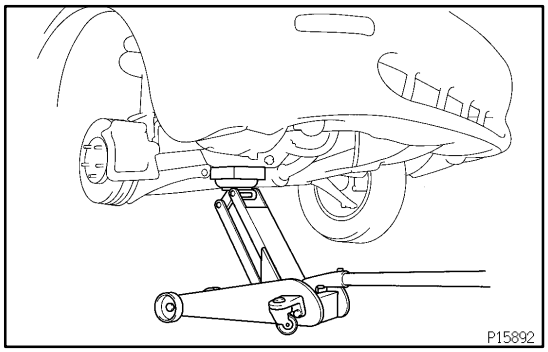

4. SLIGHTLY JACK UP ENGINE

Raise the engine enough to remove the weight from the engine mounting on the right side.

HINT:

Place a wooden block between the jack and engine.

5. REMOVE RH ENGINE MOUNTING INSULATOR

Remove the 2 bolts, 4 nuts and insulator.

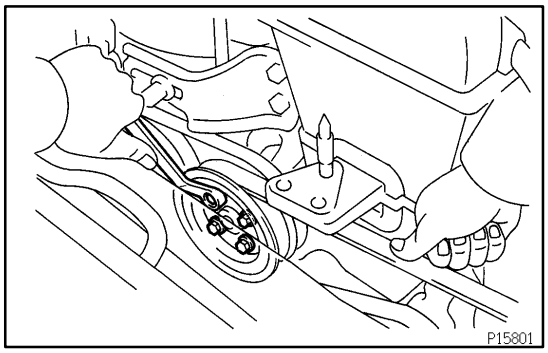

6. LOOSEN WATER PUMP PULLEY BOLTS

Stretch the belt tight and loosen the water pump pulley bolts.

7. REMOVE GENERATOR DRIVE BELT
(See page CH-8)

8. w/ A/C:
REMOVE A/C COMPRESSOR WITHOUT DISCONNECTING HOSES
(See page EM-71)

9. w/ A/C:
REMOVE A/C COMPRESSOR MOUNTING BRACKET

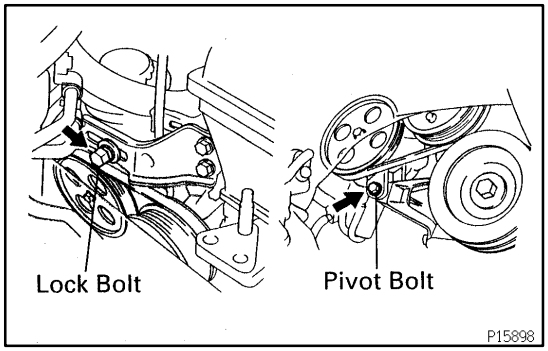

10. REMOVE PS PUMP DRIVE BELT

(a) Loosen the pivot and lock bolts.

(b) Swing PS pump toward the engine and remove the drive belt

11. DISCONNECT WATER PUMP PULLEY

12. REMOVE CYLINDER HEAD COVER

Remove the 4 cap nuts, seal washers, and cover and gasket.

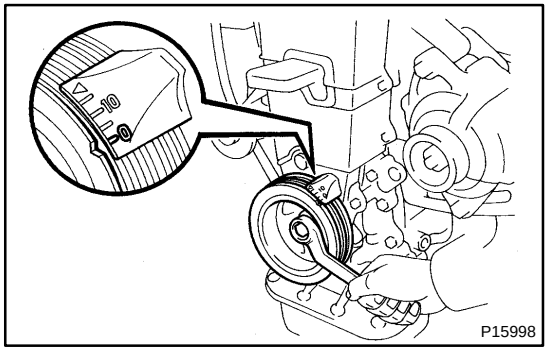

13. SET NO.1 CYLINDER TO TDC/COMPRESSION

(a) Turn the crankshaft pulley and align its groove with the timing mark ”0” of the No.1 timing belt cover.

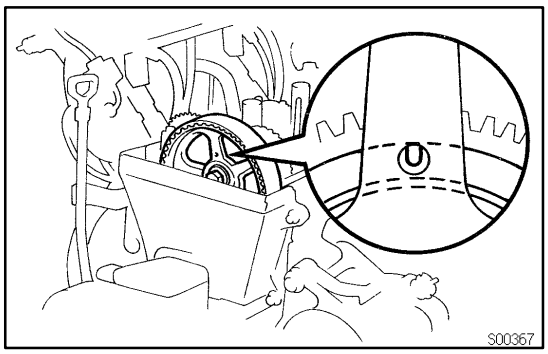

(b) Check that the hole of the camshaft timing pulley is aligned with the timing mark of the bearing cap.

If not, turn the crankshaft one revolution (360°).

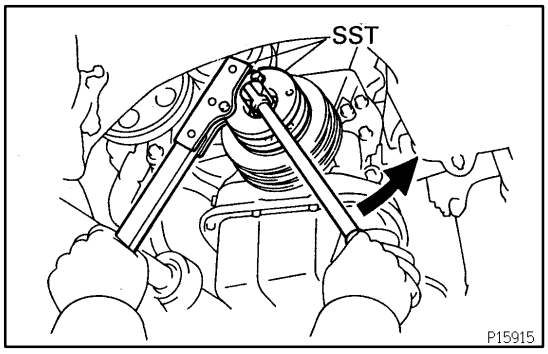

14. REMOVE CRANKSHAFT PULLEY

(a) Using SST, remove the pulley bolt.
SST 09213-54015, 09330-00021

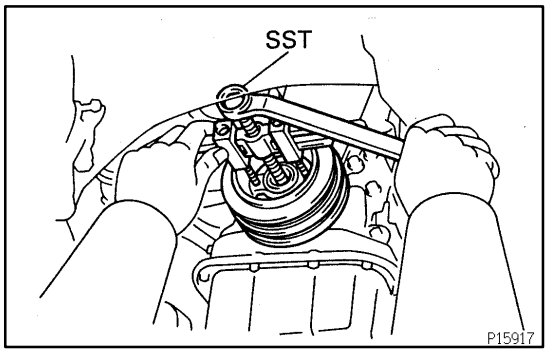

(b) Using SST, remove the pulley.
SST 09950-50010 (09951-05010, 09952-05010, 09953-05020, 09954-05030)

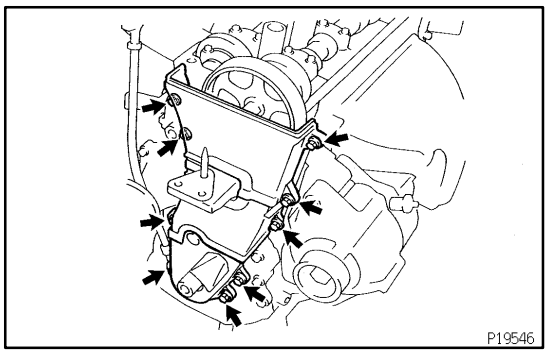

15. REMOVE TIMING BELT COVERS

Remove the 9 bolts and timing belt covers.

16. REMOVE TIMING BELT GUIDE

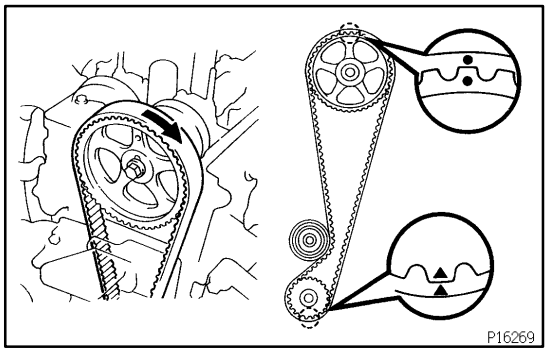

17. REMOVE TIMING BELT

HINT:

If reusing the timing belt, draw a direction arrow on the belt (in the direction of engine revolution), and place matchmarks on the pulleys and belt as shown in the illustration.

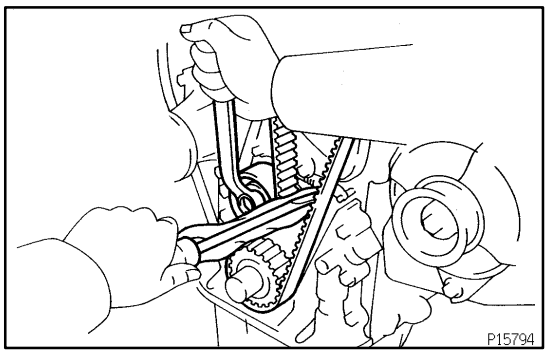

(a) Loosen the mounting bolt of the idler pulley and shift pulley toward the left as far as it will go and then temporarily tighten it.
(b) Remove the belt.

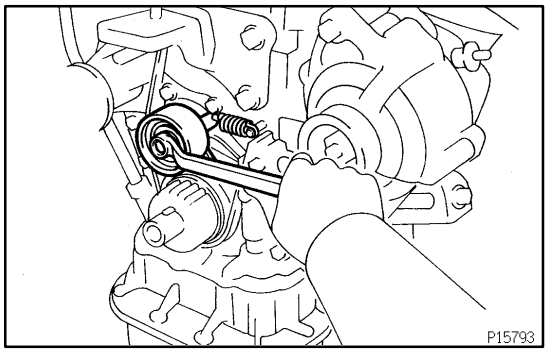

18. REMOVE IDLER PULLEY AND TENSION SPRING

Remove the bolt, pulley and tension spring.

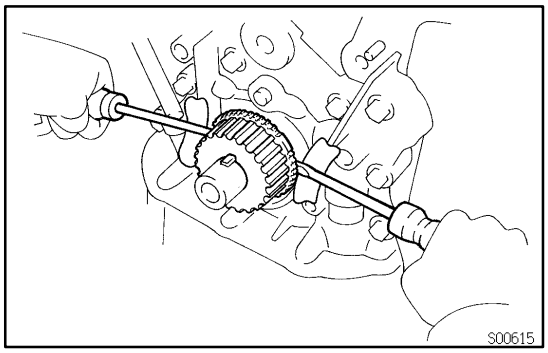

19. REMOVE CRANKSHAFT TIMING PULLEY

If the pulley cannot be removed by hand, use 2 screwdrivers.

NOTICE:

Position shop rags as shown to prevent damage.

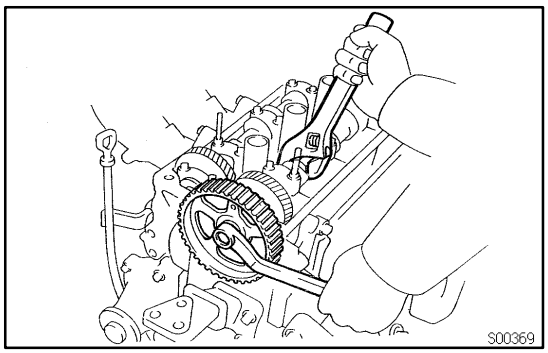

20. REMOVE CAMSHAFT TIMING PULLEY

Hold the hexagonal head wrench portion of the camshaft with a wrench, and remove the bolt and timing pulley.

NOTICE:

Be careful not to damage the cylinder head with the wrench.

CO0Z6-01

REMOVAL

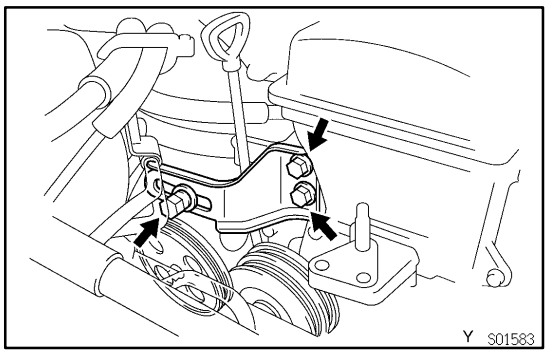

1. DRAIN ENGINE COOLANT

2. REMOVE PS PUMP DRIVE BELT
(See page EM-58)

3. REMOVE PS DRIVE BELT ADJUSTING STRUT

Remove the 3 bolts and adjusting strut.

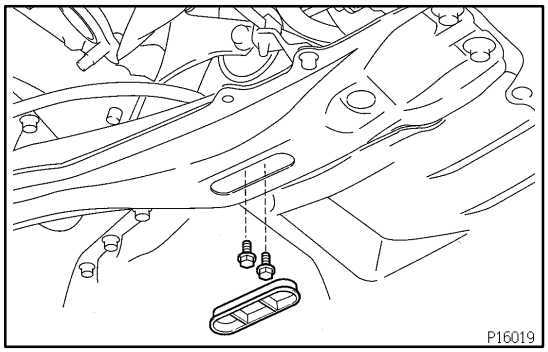

4. REMOVE ENGINE MOUNTING CENTER MEMBER

(a) Remove the hole cover.

(b) Remove the 2 bolts holding the front engine mounting insulator to the engine mounting center member.

(c) Carefully jack up the engine and remove the water pump pulley.

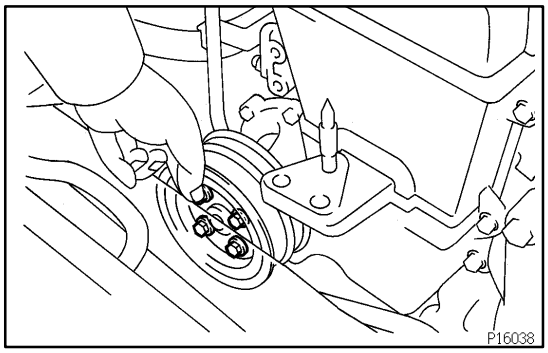

5. REMOVE WATER PUMP PULLEY

Remove the 4 bolts, and disconnect the water pump pulley from the water pump.

6. REMOVE CYLINDER HEAD COVER

Remove the 4 cap nuts, seal washers, head coverand gusket.

7. REMOVE TIMING BELT COVERS

Remove the 6 bolts and timing belt covers.

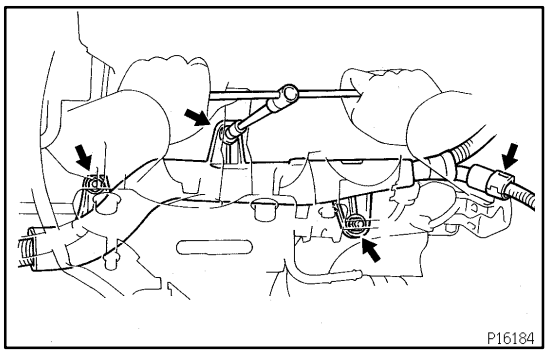

8. DISCONNECT ENGINE WIRE

(a) Disconnect the engine wire from the wire clamp.

(b) Remove the 3 nuts, and disconnect the engine wire.

9. REMOVE OIL DIPSTICK AND GUIDE

(a) Disconnect the crankshaft position sensor connector form the dipstick guide.

(b) Remove the mounting bolt and pull out the dipstick guide and gauge.

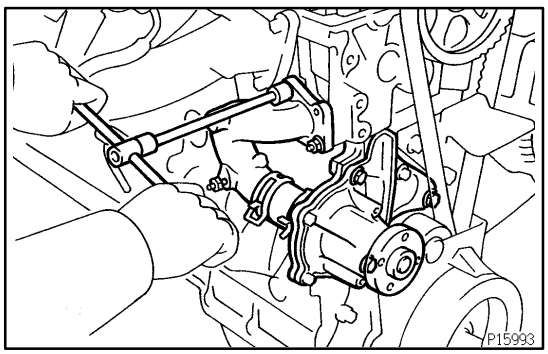

10. REMOVE WATER PUMP AND NO.2 WATER INLET

(a) Disconnect the engine coolant temperature sender gauge connector.

(b) Remove the 2 nuts holding the No.2 water inlet to the cylinder head.

(c) Remove the 3 bolts and water pump together with the No.2 water inlet.

(d) Remove the O-ring from the cylinder block.

11. SEPARATE WATER PUMP AND NO.2 WATER INLET

SA1W4-01

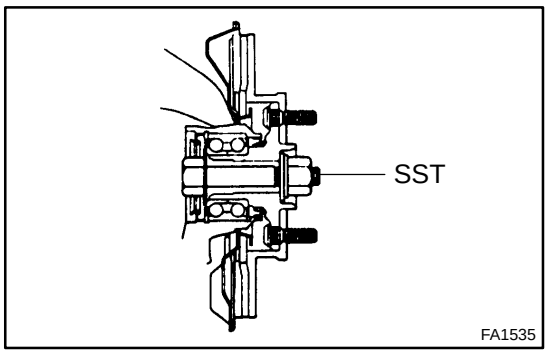

REMOVAL

NOTICE:

- **The hub bearing could be damaged if it is subjected to the vehicle weight, such as when moving the vehicle with the drive shaft removed. Therefore, if it is absolutely necessary to place the vehicle weight on the hub bearing, first support it with SST.**
  SST 09608-16042 (09608-02021, 09608-02041)
- **w/ ABS:**
  After disconnecting the drive shaft from the axle hub, work carefully so as not to damage the sensor rotor serrations on the drive shaft.

1. REMOVE FRONT WHEEL
Torque: 103 N·m (1,050 kgf·cm, 76 ft·lbf)

2. REMOVE ENGINE UNDER COVERS

3. DRAIN GEAR OIL (M/T) OR ATF (A/T)

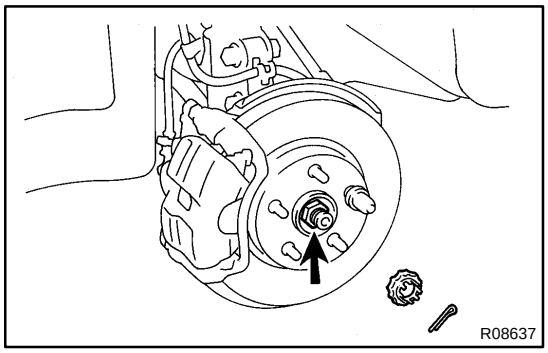

4. REMOVE DRIVE SHAFT LOCK NUT

(a) Remove the cotter pin and lock cap.
Torque: 216 N·m (2,200 kgf·cm, 159 ft·lbf)

(b) Loosen the bearing lock nut while depressing the brake pedal.

5. DISCONNECT TIE ROD END FROM STEERING KNUCKLE (See page SA-10)

6. DISCONNECT STABILIZER BAR LINK FROM LOWER SUSPENSION ARM (See page SA-10)

7. DISCONNECT LOWER BALL JOINT FROM LOWER SUSPENSION ARM (See page SA-10)

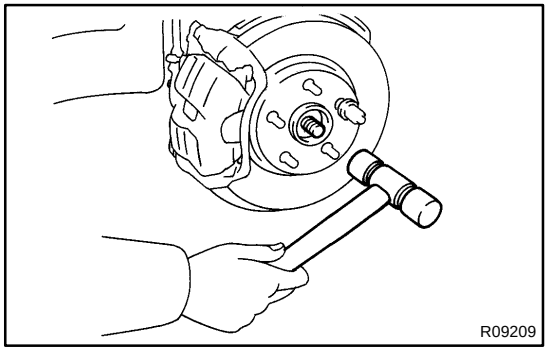

8. DISCONNECT DRIVE SHAFT FROM AXLE HUB

Using a plastic hammer, disconnect the drive shaft from the axle hub.

NOTICE:

Be careful not to damage the inner oil seal, boots and ABS speed sensor rotor.

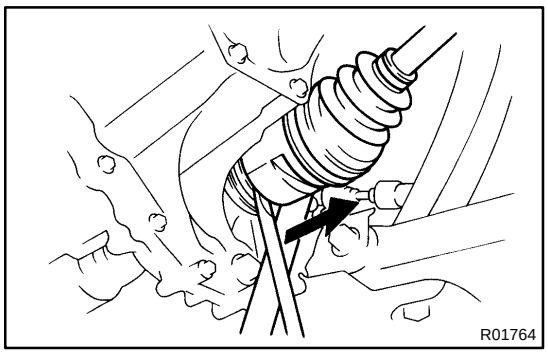

9. REMOVE LH DRIVE SHAFT

(a) Using a hub nut wrench and hammer handle or equivalent, pull out the drive shaft, as shown.

NOTICE:

Be careful not to damage the dust cover, boots, oil seal and transaxle body.

HINT:

At the time of installation, please refer to the following items.

- After installation, check that there is 2 - 3 mm (0.08 - 0.12 in.) of play in axial direction.
- After installation, check that the drive shaft cannot be pulled out by hand.

(b) Using a snap ring expander, remove the snap ring.

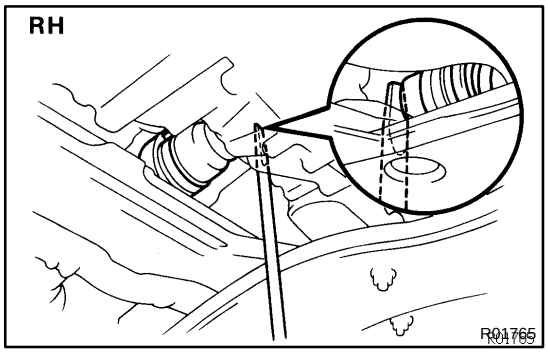

10. REMOVE RH DRIVE SHAFT

(a) Using a hub nut wrench and hammer handle or equivalent, pull out the drive shaft, as shown.

NOTICE:

Be careful not to damage the dust cover, boots, oil seal and transaxle body.

HINT:

At the time of installation, please refer to the following items.

- After installation, check that there is 2 - 3 mm (0.08 - 0.12 in.) of play in axial direction.
- After installation, check that the drive shaft cannot be pulled out by hand.

(b) Using a snap ring expander, remove the snap ring.

AX091-03

REMOVAL

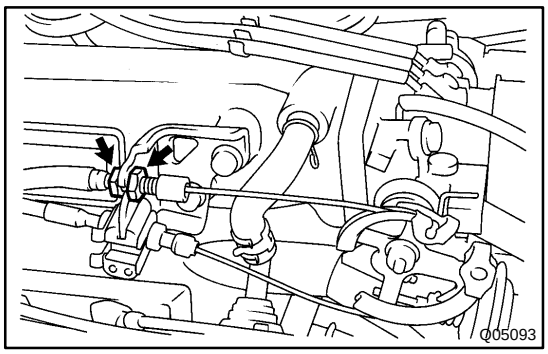

1. REMOVE BATTERY

2. DISCONNECT THROTTLE CABLE

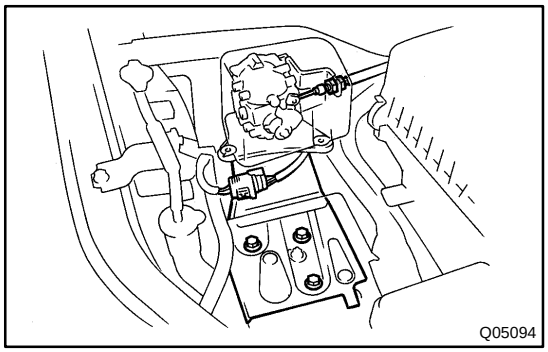

3. w/ Cruise Control System:
REMOVE CRUISE CONTROL ACTUATOR

(a) Remove the cruise control actuator cover.

(b) Disconnect the connector from the cruise control actuator.

(c) Remove the 3 bolts and cruise control actuator.

4. REMOVE AIR CLEANER ASSEMBLY

(a) Disconnect the connector.

(b) Remove the air cleaner assembly.

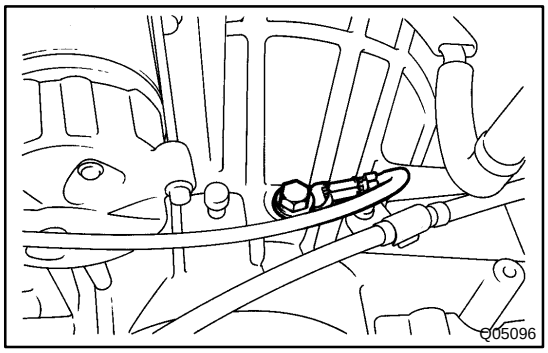

5. REMOVE 2 GROUND CABLE MOUNTING BOLTS
Torque: 19 N·m (195 kgf·cm, 14 ft·lbf)



Torque: 64 N·m (650 kgf·cm, 47 ft·lbf)

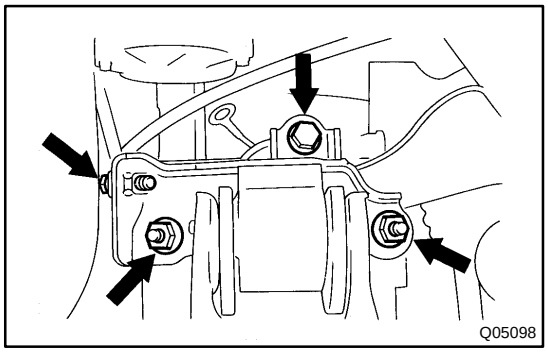

6. REMOVE 4 ENGINE LEFT MOUNTING UPPER SIDE BOLTS
Torque: 64 N·m (650 kgf·cm, 47 ft·lbf)

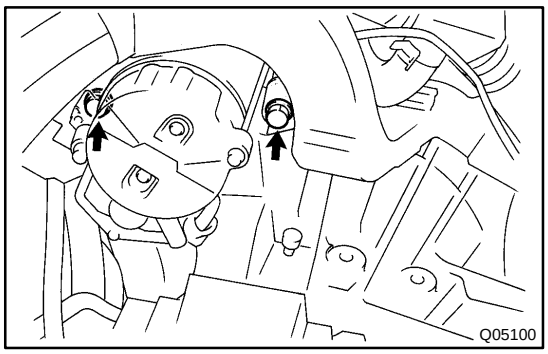

7. REMOVE STARTER

(a) Remove the nut and disconnect the connector and terminal.

(b) Remove the 2 bolts and starter.
Torque: 39 N·m (400 kgf·cm, 29 ft·lbf)

8. DISCONNECT VEHICLE SPEED SENSOR CONNECTOR

9. DISCONNECT PARK/NEUTRAL POSITION SWITCH CONNECTOR

10. DISCONNECT 2 SOLENOID CONNECTORS

11. REMOVE 3 TRANSAXLE MOUNTING BOLTS
Torque: 64 N·m (650 kgf·cm, 47 ft·lbf)

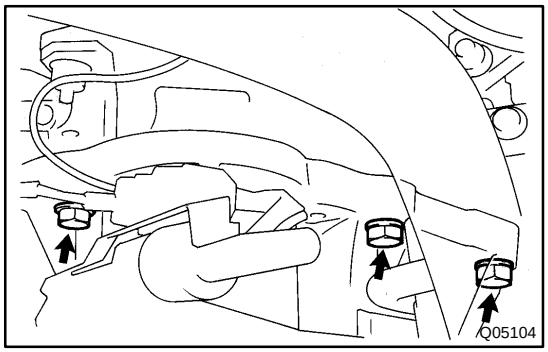

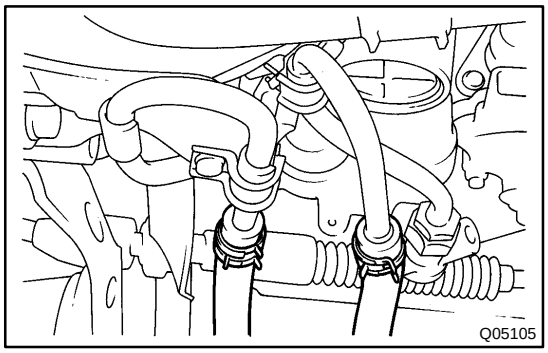

12. DISCONNECT OIL COOLER HOSE

Loosen the 2 clips and disconnect the 2 oil cooler hoses.

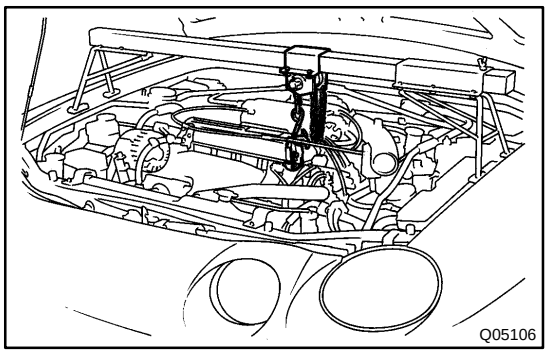

13. INSTALL ENGINE SUPPORT FIXTURE

14. RAISE UP VEHICLE

15. REMOVE ENGINE UNDER COVERS

16. DRAIN ATF

17. REMOVE LH AND RH DRIVE SHAFTS (See page SA-18)

18. JACK UP TRANSAXLE

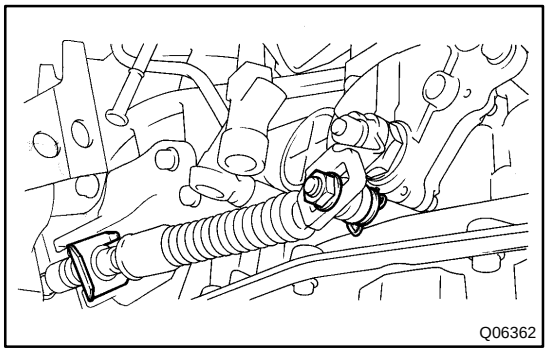

19. DISCONNECT SHIFT CONTROL CABLE

(a) Remove the nut from the control shaft lever.
Torque: 13 N·m (135 kgf·cm, 10 ft·lbf)

(b) Remove the clip and disconnect the shift control cable.

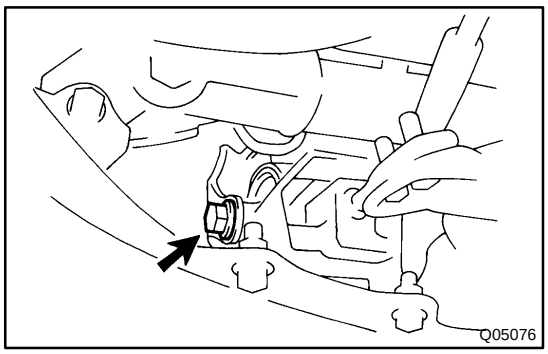

20. REMOVE ENGINE REAR MOUNTING BOLT
Torque: 88 N·m (890 kgf·cm, 64 ft·lbf)

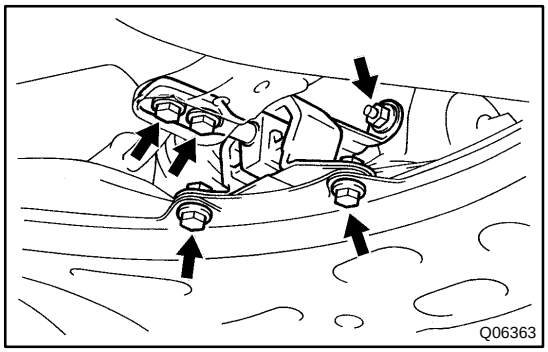

21. REMOVE FRONT EXHAUST PIPE
(a) Remove the 2 bolts from the exhaust pipe.
Torque: 19 N·m (195 kgf·cm, 14 ft·lbf)
(b) Remove the 2 bolts, nut and exhaust pipe stay from the suspension member.
Torque:
Exhaust pipe side: 25 N·m (250 kgf·cm, 18 ft·lbf)
Sus pension member side: 19 N·m (195 kgf·cm, 14 ft·lbf)

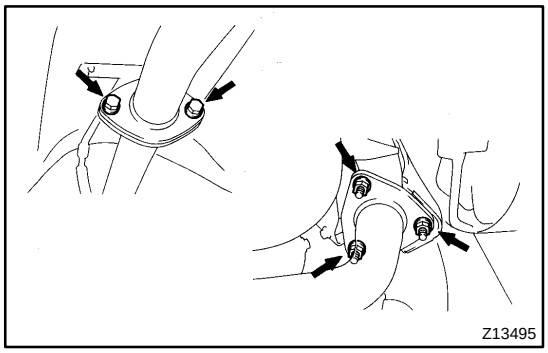

(c) Remove the 2 bolts and nuts.
Torque: 43 N·m (440 kgf·cm, 32 ft·lbf)
(d) Disconnect the front exhaust pipe and remove the gasket.
HINT:
At the time of installation, please refer to the following item.
Replace the used 2 nuts and gasket with new ones.
(e) Remove the 3 nuts, front exhaust pipe and gasket.
Torque: 62 N·m (630 kgf·cm, 46 ft·lbf)
HINT:
At the time of installation, please refer to the following item.
Replace the used 3 nuts and gasket with new ones.

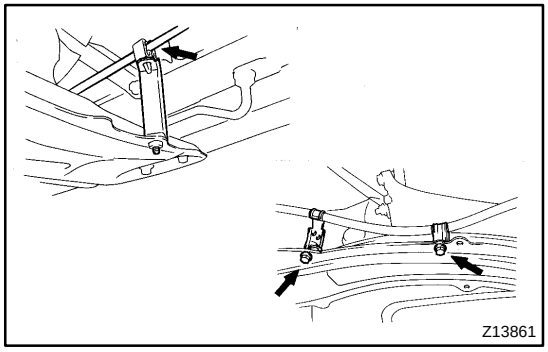

22. REMOVE SUSPENSION MEMBER
(a) Disconnect the air conditioner pipe bracket.
(b) Remove the 2 shift cable mounting bolts.

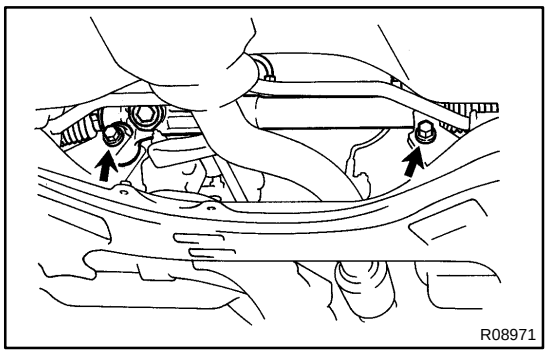

(c) Remove the 2 power steering gear assembly set bolts and nuts.
Torque: 127 N·m (1,300 kgf·cm, 94 ft·lbf)

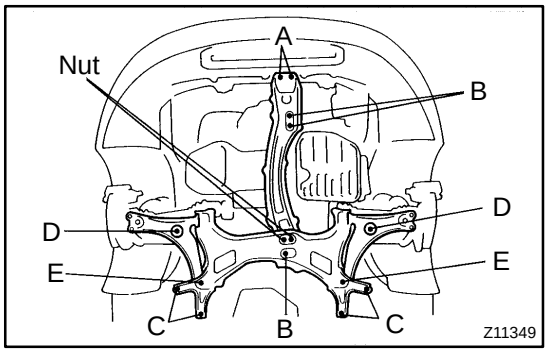

(d) Remove the 3 grommets.
(e) Remove the 13 bolts and 2 nuts.
Torque:
A Bolt: 35 N·m (360 kgf·cm, 26 ft·lbf)
B Bolt: 80 N·m (820 kgf·cm, 59 ft·lbf)
C Bolt: 175 N·m (1,800 kgf·cm, 130 ft·lbf)
D Bolt: 127 N·m (1,300 kgf·cm, 94 ft·lbf)
E Bolt: 167 N·m (1,700 kgf·cm, 123 ft·lbf)
Nut: 80 N·m (820 kgf·cm, 59 ft·lbf)

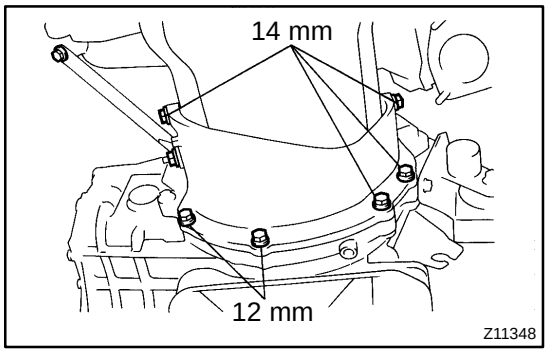

23. REMOVE STIFFENER PLATE
(a) Remove the nut, bolt and No.1 manifold stay.
Torque:
Bolt: 21 N·m (210 kgf·cm, 15 ft·lbf)
Nut: 43 N·m (440 kgf·cm, 32 ft·lbf)
(b) Remove the 6 bolts and stiffener plate.
Torque:
12 mm Bolt: 21 N·m (210 kgf·cm, 15 ft·lbf)
14 mm Bolt: 43 N·m (440 kgf·cm, 32 ft·lbf)

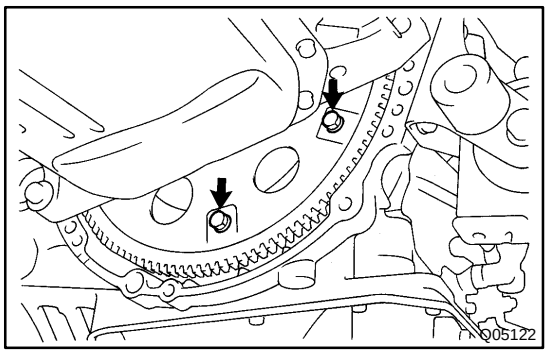

24. REMOVE TRANSAXLE
(a) Turn the crankshaft to gain access and remove the 6 bolts while holding the crankshaft pulley set bolt with a wrench.
Torque: 25 N·m (250 kgf·cm, 18 ft·lbf)
Sealant: Part No.08833-00070, THREE BOND 1324 or equivalent

HINT:
At the time of installation, please refer to the following item.
First install gray colored bolt and then 5 other bolts.

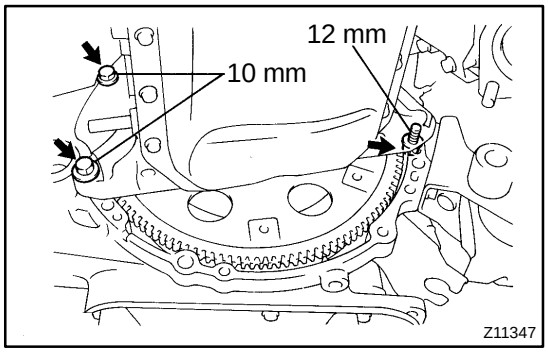

(b) Remove the 3 bolts and transaxle.
Torque:
10 mm Bolt: 46 N·m (470 kgf·cm, 34 ft·lbf)
12 mm Bolt: 64 N·m (650 kgf·cm, 47 ft·lbf)

AX0RD-02

REMOVAL

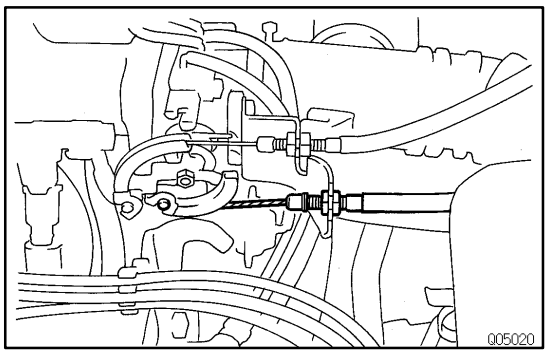

1. **REMOVE LEVEL GAUGE**
2. **DISCONNECT THROTTLE CABLE**
3. **REMOVE AIR CLEANER ASSEMBLY**
4. **REMOVE BATTERY**

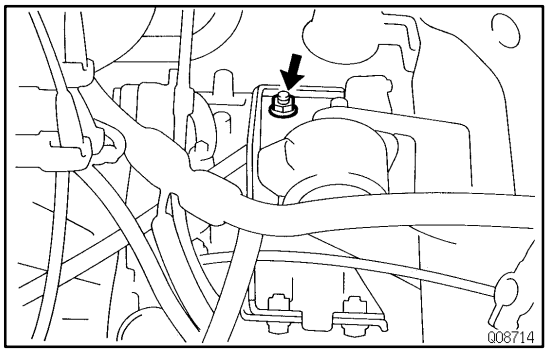

5. **REMOVE ENGINE LEFT MOUNTING UPPER SIDE NUT**
   Torque: 64 N·m (650 kgf·cm, 47 ft·lbf)

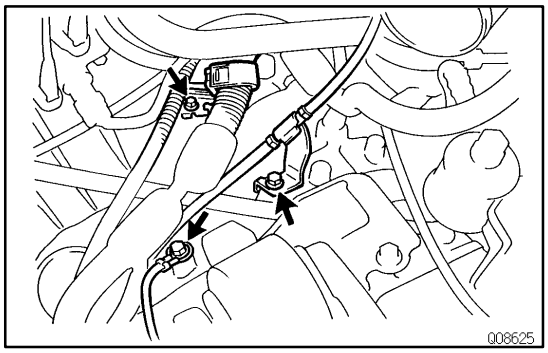

6. **REMOVE GROUND CABLE BOLT**
   Torque: 19 N·m (195 kgf·cm, 14 ft·lbf)
7. **REMOVE THROTTLE CABLE MOUNTING BOLT**
8. **REMOVE WIRE HARNESS CLAMP MOUNTING BOLT**

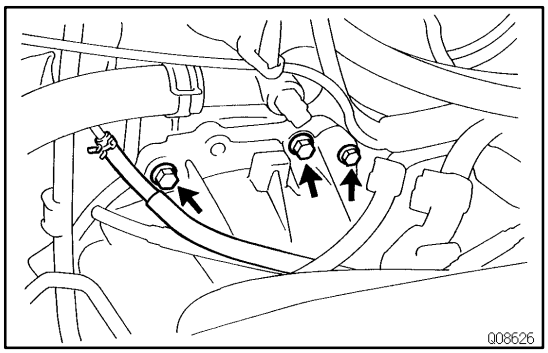

9. **REMOVE STARTER UPPER SIDE MOUNTING BOLT AND 2 TRANSAXLE MOUNTING BOLTS**
   Torque:
   Starter mounting bolt:
   39 N·m (400 kgf·cm, 29 ft·lbf)
   Transaxle mounting bolt:
   64 N·m (650 kgf·cm, 47 ft·lbf)

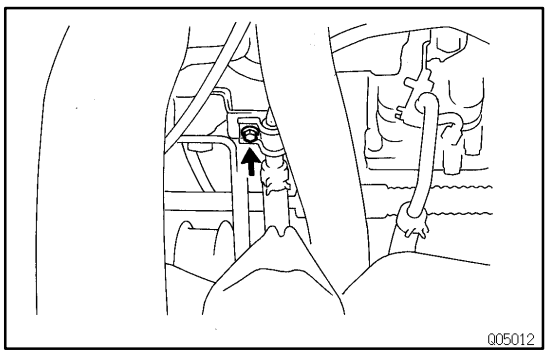

10. **REMOVE FILLER PIPE**

(a) Loosen the clip and disconnect the breather hose from the filler pipe.

(b) Remove the bolt.

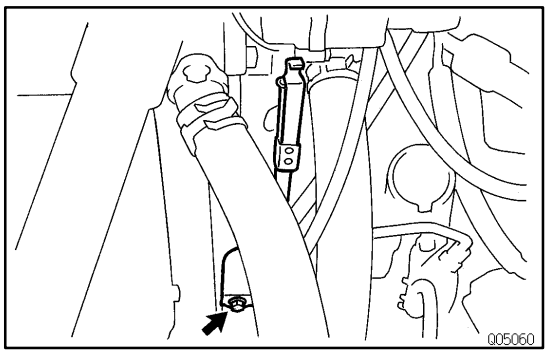

(c) Remove the bolt and filler pipe.

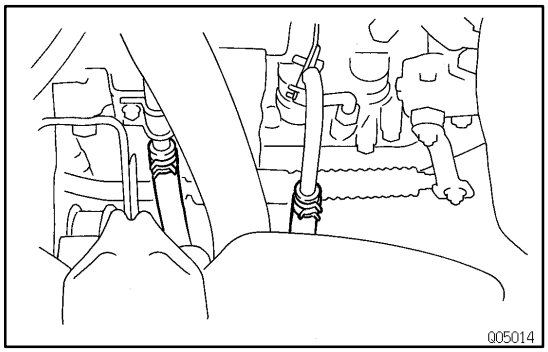

11. DISCONNECT 2 OIL COOLER HOSES

Loosen the 2 clips and disconnect the 2 oil cooler hoses.

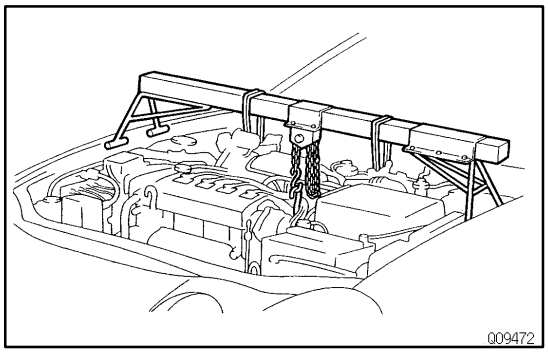

12. INSTALL ENGINE SUPPORT FIXTURE

13. SUPPORT STEERING GEAR HOUSING SECURELY FROM ENGINE SUPPORT FIXTURE, AS SHOWN

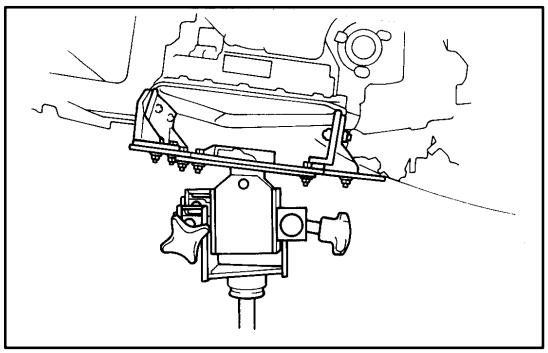

14. RAISE VEHICLE

15. REMOVE ENGINE UNDER COVERS

16. DRAIN ATF

17. REMOVE LEFT AND RIGHT DRIVE SHAFTS (See page SA-17)

18. JACK UP TRANSAXLE

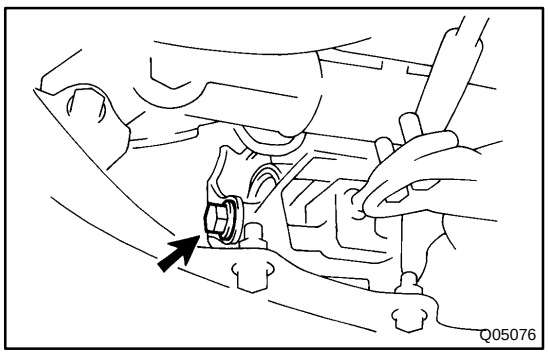

19. REMOVE ENGINE REAR MOUNTING BOLT

Torque: 88 N·m (890 kgf·cm, 64 ft·lbf)

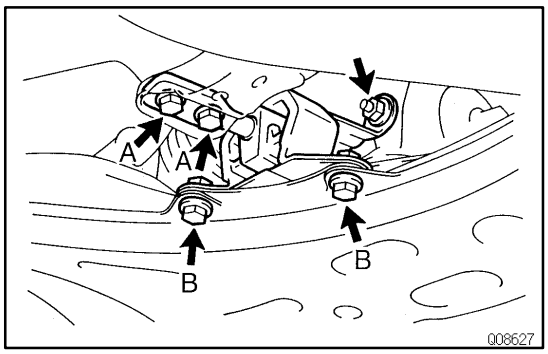

20. REMOVE FRONT EXHAUST PIPE

(a) Remove the 4 bolts, nut and exhaust pipe stay from the suspension member.
Torque:
A bolt: 25 N·m (250 kgf·cm, 18 ft·lbf)
B bolt: 19 N·m (195 kgf·cm, 14 ft·lbf)
Nut: 19 N·m (195 kgf·cm, 14 ft·lbf)

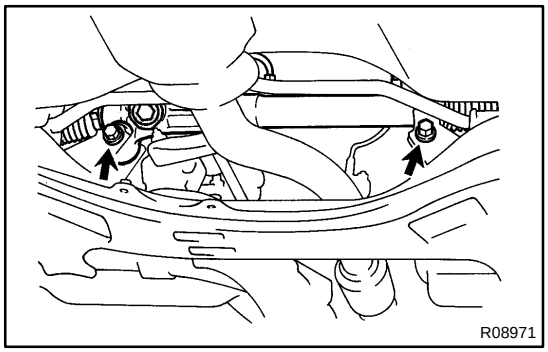

(b) Remove the 2 bolts and power steering gear assembly.
Torque: 127 N·m (1,300 kgf·cm, 94 ft·lbf)

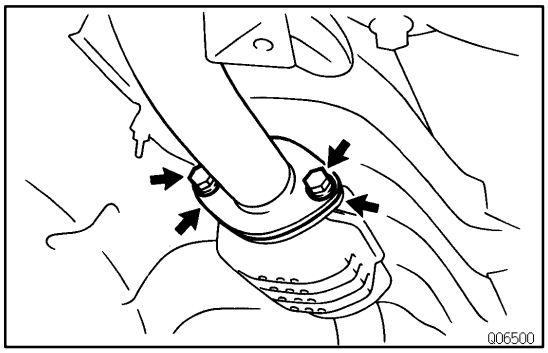

(c) Remove the 2 bolts and nuts from the exhaust pipe.
Torque: 43 N·m (440 kgf·cm, 32 ft·lbf)

HINT:
Replace the used 2 nuts with new ones.

(d) Disconnect the front exhaust pipe and remove the gasket.

HINT:
Replace the used gasket with a new one.

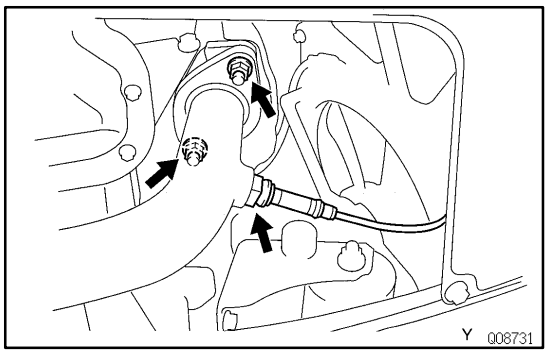

(e) Disconnect the oxygen sensor .
Torque: 44 N·m (450 kgf·cm, 32 ft·lbf)

(f) Remove the 2 nuts, front exhaust pipe and gasket.
Torque: 62 N·m (630 kgf·cm, 46 ft·lbf)

HINT:
Replace the used 2 nuts and gasket with new ones.

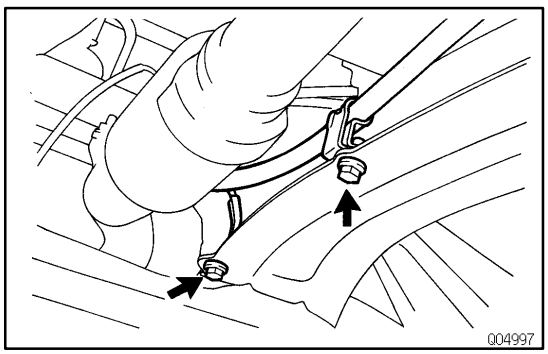

21. REMOVE SUSPENSION MEMBERS

(a) Remove the 2 shift cable mounting bolts.

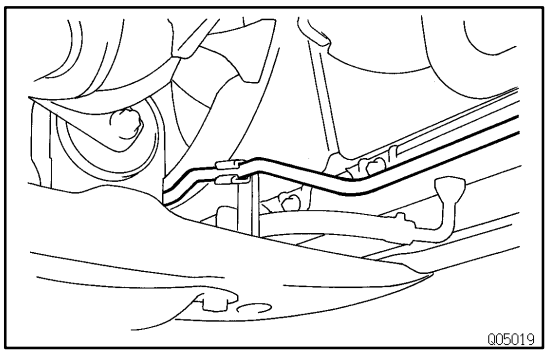

(b) Disconnect the air conditioner pipe.

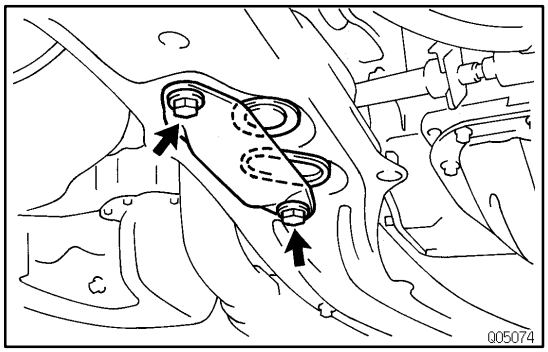

(c) Remove the 2 bolts and cover.
(d) Remove the 2 grommets.

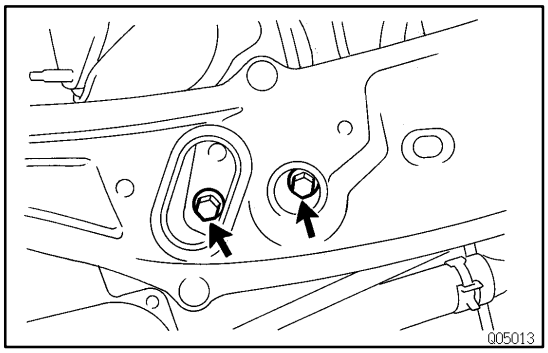

(e) Remove the 2 bolts.
Torque: 80 N·m (815 kgf·cm, 59 ft·lbf)

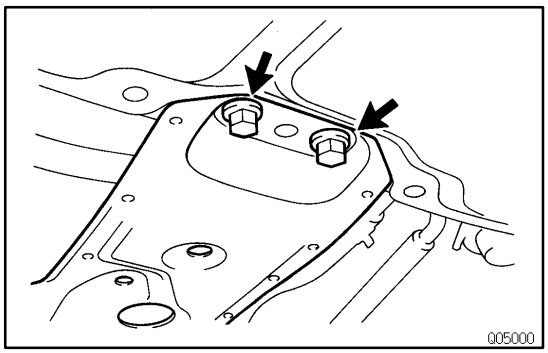

(f) Remove the 2 bolts.
Torque: 35 N·m (360 kgf·cm, 26 ft·lbf)

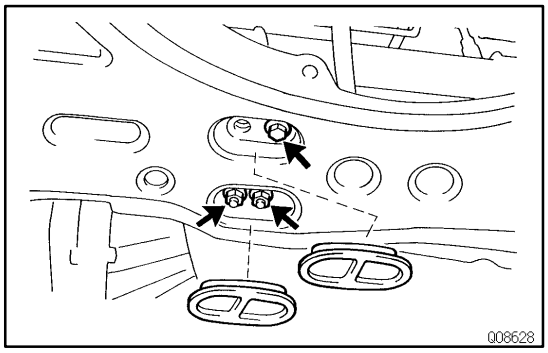

(g) Remove the 2 grommets.
(h) Remove the 2 nuts and bolt.
Torque: 80 N·m (815 kgf·cm, 59 ft·lbf)
(i) Remove the lower center member and engine rear mounting.

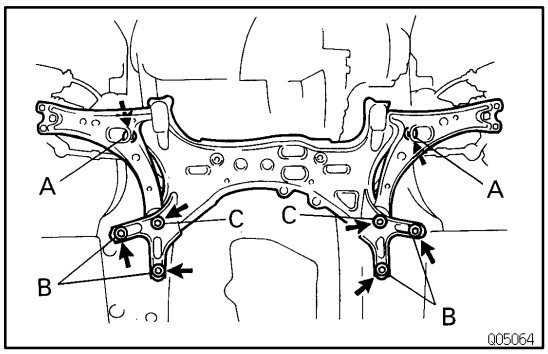

(j) Remove the 8 bolts and front lower sub-frame.
Torque:
A bolt: 127 N·m (1,300 kgf·cm, 94 ft·lbf)
B bolt: 175 N·m (1,800 kgf·cm, 130 ft·lbf)
C bolt: 167 N·m (1,700 kgf·cm, 127 ft·lbf)

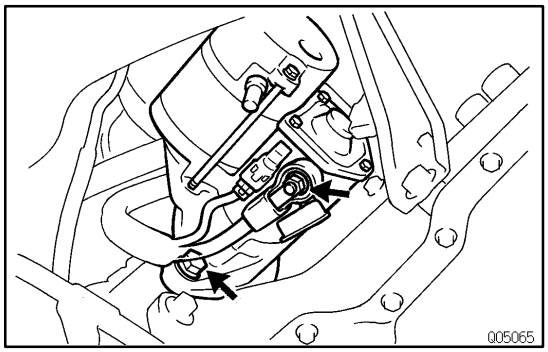

22. REMOVE STARTER
(a) Remove the nut and disconnect the connector and terminal.
(b) Remove the bolt and starter.
Torque: 39 N·m (400 kgf·cm, 29 ft·lbf)

23. DISCONNECT VEHICLE SPEED SENSOR CONNECTOR

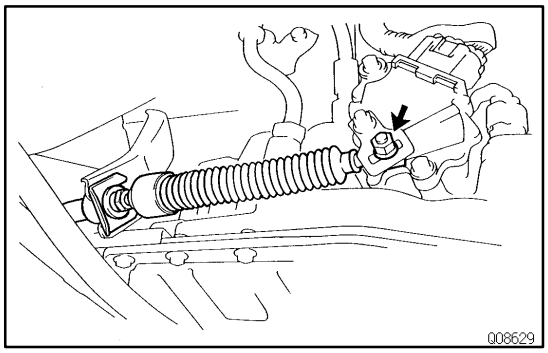

24. DISCONNECT SHIFT CONTROL CABLE
(a) Remove the nut from the control shaft lever.
Torque: 13 N·m (135 kgf·cm, 10 ft·lbf)
(b) Remove the clip and disconnect the control cable.

25. DISCONNECT SOLENOID CONNECTOR AND PARK/NEUTRAL POSITION SWITCH CONNECTOR

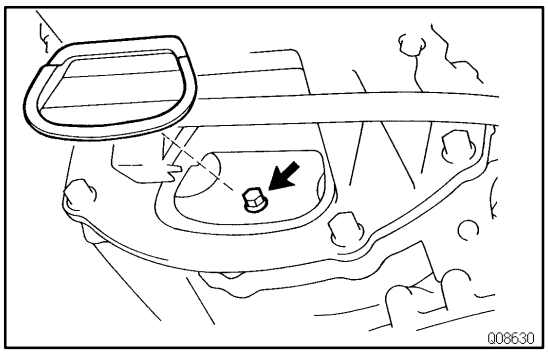

26. REMOVE TRANSAXLE
(a) Remove the hole plug.
(b) Turn the crankshaft to gain access and remove the 6 bolts with holding the crankshaft pulley set bolt by a wrench.
Torque: 25 N·m (250 kgf·cm, 18 ft·lbf)

HINT:
- Clean the threads of bolts with the gasoline.
- Coat the threads of the bolts with the sealer.
FIPG: Part No. 08833-00070, THREE BOND 1324 or equivalent
- First, install the gray bolt. Then install 5 black bolts while turning the crankshaft to gain access.

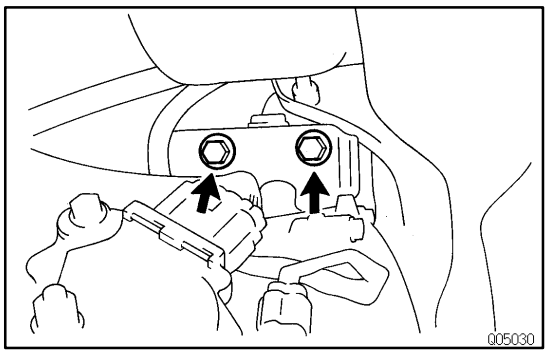

(c) Remove the 2 engine left mounting lower side bolts.
Torque: 64 N·m (650 kgf·cm, 47 ft·lbf)

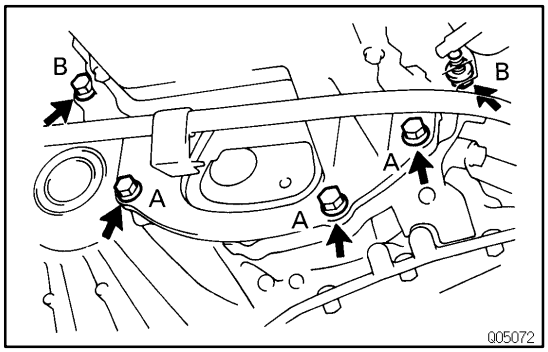

(d) Remove the 5 bolts and transaxle.
NOTICE:
Be careful not to damage the pulleys.
Torque:
A bolt: 23 N·m (230 kgf·cm, 17 ft·lbf)
B bolt: 46 N·m (470 kgf·cm, 34 ft·lbf)

BO1EM-03

REMOVAL

1. DISCONNECT DEFOGGER CONNECTOR

2. REMOVE THESE PARTS:

(a) Rear wiper arm

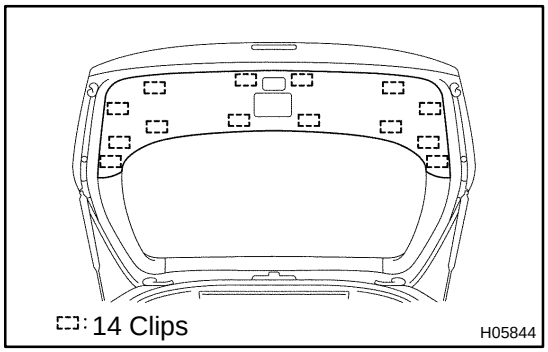

(b) Back door trim board

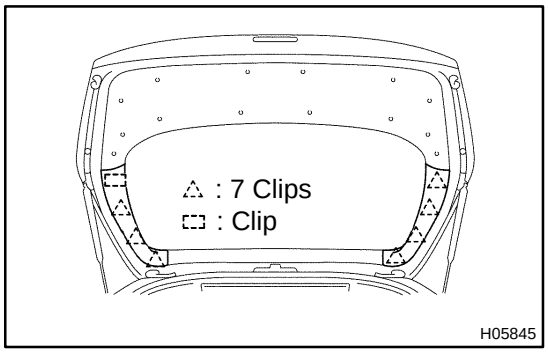

(c) Back door trim cover LH and RH

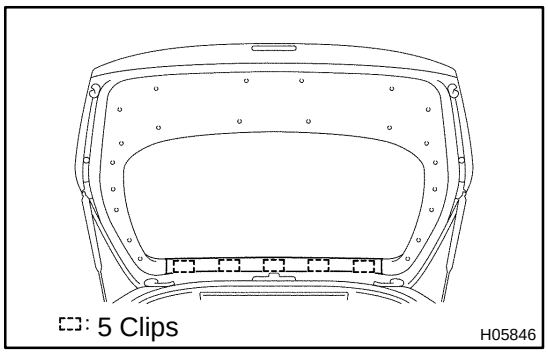

(d) Back door trim board upper

3. REMOVE BACK WINDOW MOULDING

Using a knife, cut off the moulding, as shown in the illustration.

NOTICE:

Do not damage the back door panel with the knife.

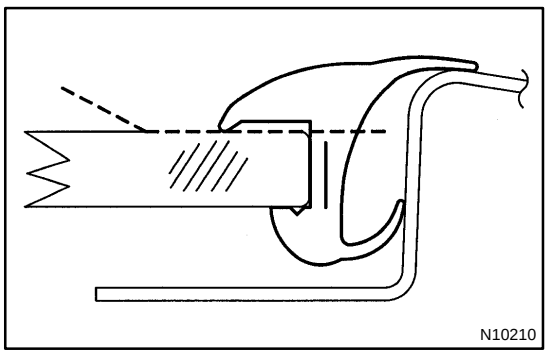

4. REMOVE BACK DOOR GLASS

(a) Push piano wire through from the interior.

(b) Tie both wire ends to wooden blocks or similar object.

HINT:

Apply adhesive tape to the outer surface to keep the surface from being scratched.

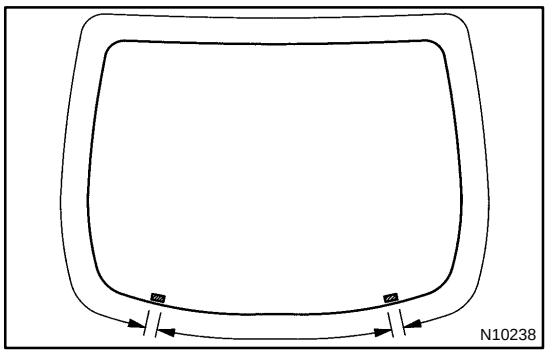

(c) Cut the adhesive by pulling the wire around it.

HINT:

Cut the adhesive areas, as shown in the illustration, leaving the adhesive where the pins are.

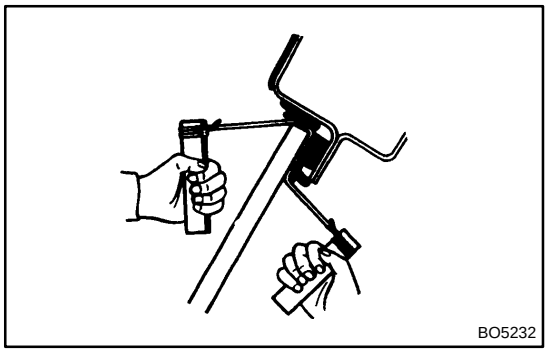

(d) Using piano wire, as shown in the illustration, cut off the adhered part to the pins.

(e) Remove the glass.

NOTICE:

Leave as much of the adhesive on the body as possible when cutting off the glass.

BO1EJ-03

REMOVAL

1. REMOVE THESE PARTS:

(a) Rear seat
(See page BO-123)

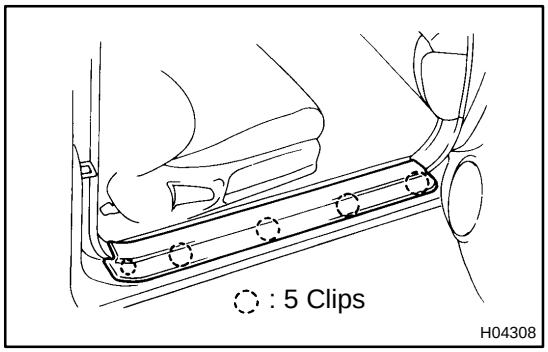

(b) Front door scuff inside plates

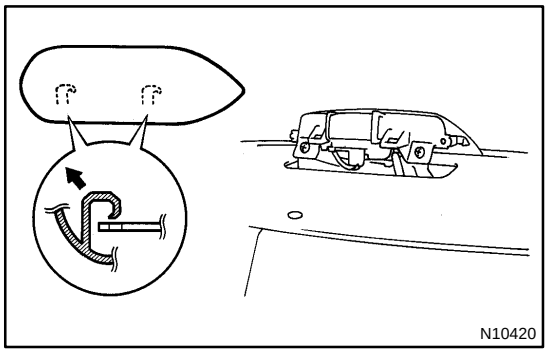

(c) High-mounted stop light and cover
(d) Package tray trim panel
(e) Room partition board LH and RH
(f) Rear seatback hinges

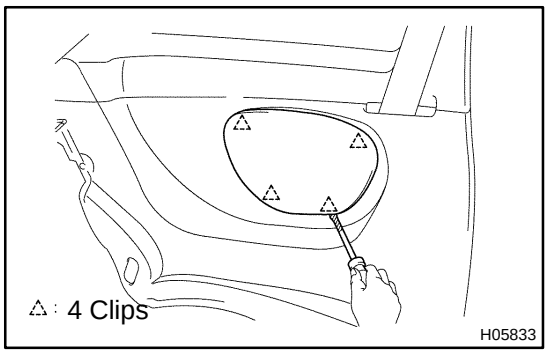

2. REMOVE QUARTER TRIM PANELS

HINT:
Do the same for LH and RH.

(a) Using a screwdriver, remove the speaker grille.

HINT:
Tape the screwdriver tip before use.

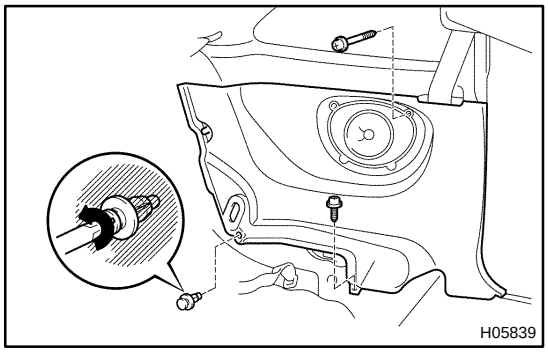

(b) Remove the 2 screws and clips.

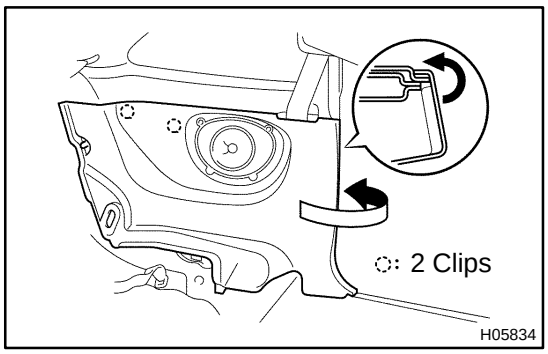

(c) Using a screwdriver, remove the quarter trim panel.

HINT:

Tape the screwdriver tip before use.

3. REMOVE ROOF SIDE INNER GARNISHES

HINT:

Do the same for LH and RH.

(a) Remove the front seat outer belt shoulder anchor bolt.

(b) Remove the rear seat outer belt floor anchor bolt.

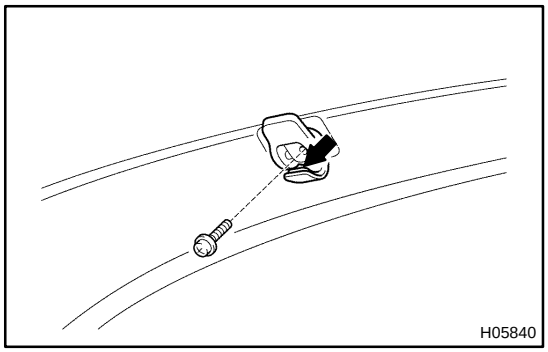

(c) Remove the screw and coat hook.

(d) Remove the clip.

(e) Using a screwdriver, pull up the roof side inner garnish.

HINT:

Tape the screwdriver tip before use.

(f) Remove the roof side inner garnish through the rear seat outer belt.

4. DISCONNECT REAR DEFOGGER CONNECTOR

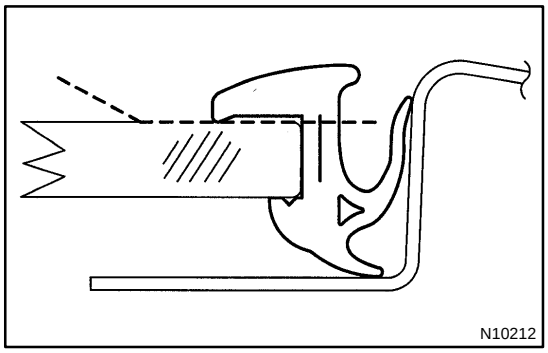

5. REMOVE BACK WINDOW MOULDING

Using a knife, cut off the moulding, as shown in the illustration.

NOTICE:

Do not damage the body with the knife.

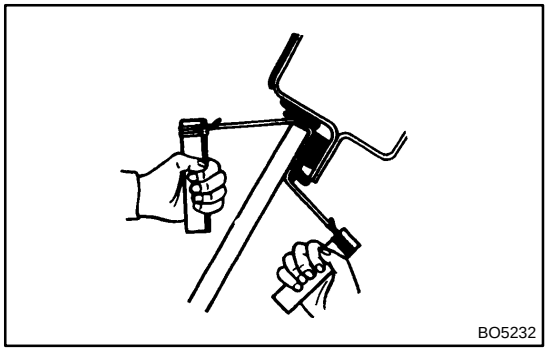

6. REMOVE BACK WINDOW GLASS

(a) Push piano wire through from the interior.

(b) Tie both wire ends to wooden blocks or similar object.

HINT:

Apply adhesive tape to the outer surface to keep the surface from being scratched.

(c) Cut the adhesive by pulling the wire around it.

(d) Remove the glass.

NOTICE:

Leave as much of the adhesive on the body as possible when cutting off the glass.

MX0E5-01

REMOVAL

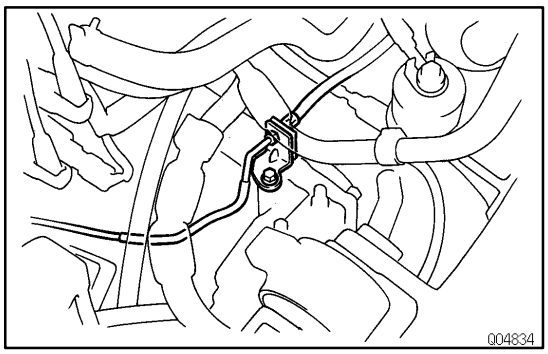

1. REMOVE AIR CLEANER CASE ASSEMBLY WITH AIR HOSE

2. REMOVE CLUTCH RELEASE CYLINDER AND LINE

(a) Remove the set bolt of the line bracket.

(b) Remove the 2 bolts and clutch release cylinder and line.
Torque: 12 N·m (120 kgf·cm, 9 ft·lbf)

3. DISCONNECT BACK-UP LIGHT SWITCH CONNECTOR AND VEHICLE SPEED SENSOR CONNECTORS

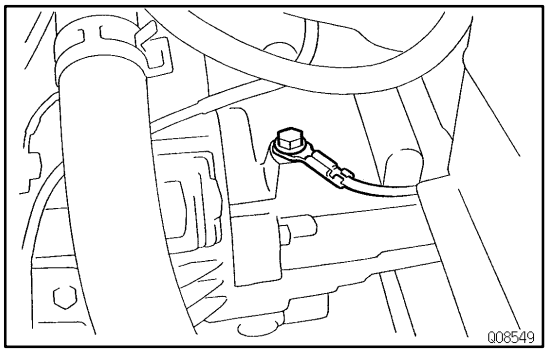

4. DISCONNECT GROUND CABLE

Remove the bolt and disconnect the ground cable from the transaxle.

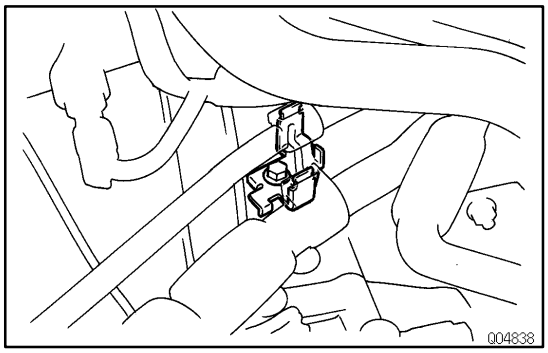

5. REMOVE ENGINE WIRES CLAMP

Remove the bolt and engine wires clamp from the transaxle.

6. DISCONNECT CONTROL CABLE

(a) Remove the 2 clips and washers.

(b) Remove the 2 clips from the cables.

(c) Disconnect the 2 control cables from the control lever housing support bracket.

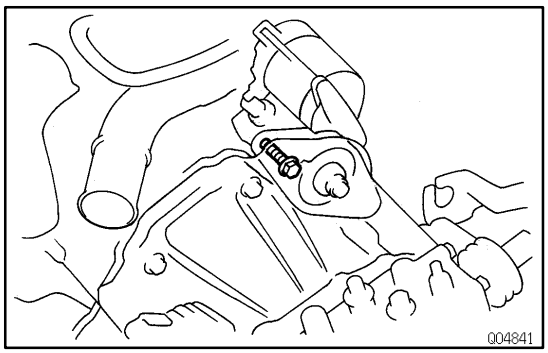

7. REMOVE STARTER SET BOLT

Remove the set bolt of the starter from the transaxle upper side.
Torque: 39 N·m (400 kgf·cm, 29 ft·lbf)

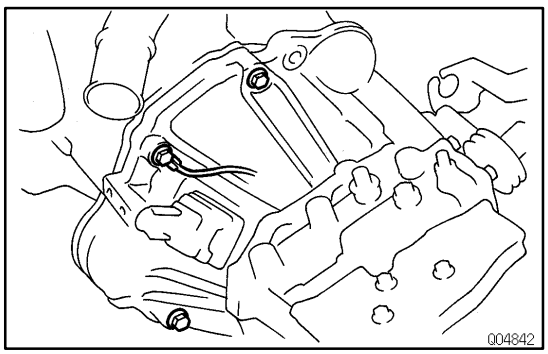

8. REMOVE 3 TRANSAXLE UPPER SIDE MOUNTING BOLTS

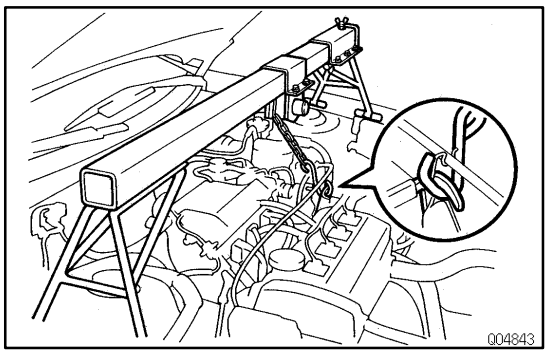

9. INSTALL ENGINE SUPPORT FIXTURE

10. REMOVE FRONT WHEEL

Torque: 103 N·m (1,050 kgf·cm, 76 ft·lbf)

11. RAISE VEHICLE

NOTICE:

Make sure that the vehicle is securely supported.

12. REMOVE LH AND RH ENGINE UNDER COVERS

13. DRAIN TRANSAXLE OIL

Oil grade: API GL-4 or GL-5

Viscosity: SAE 75W-90

Capacity: 1.9 liters (2.0 US qts, 1.7 Imp. qts)

Torque: 39 N·m (400 kgf·cm, 29 ft·lbf)

14. REMOVE LH AND RH DRIVE SHAFTS

(See page SA-18)

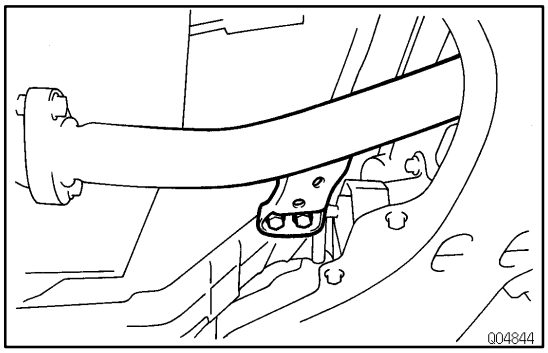

15. REMOVE EXHAUST FRONT PIPE

(a) Remove the 2 bolts from the exhaust front pipe support bracket.

Torque: 19 N·m (195 kgf·cm, 14 ft·lbf)

(b) Disconnect the oxygen sensor connector.

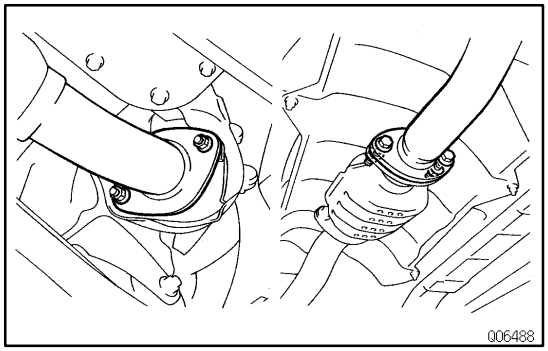

(c) Remove the 2 nuts and gasket from the exhaust manifold.

Torque: 62 N·m (630 kgf·cm, 46 ft·lbf)

(d) Remove the 2 bolts and nuts.

Torque: 42 N·m (430 kgf·cm, 31 ft·lbf)

(e) Remove the gasket and exhaust front pipe.

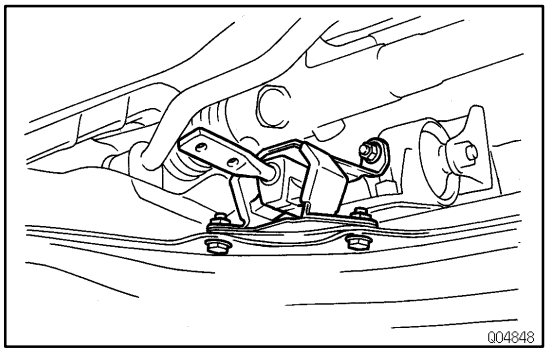

(f) Remove the 2 bolts, nut and front pipe support bracket.

Torque: 19 N·m (195 kgf·cm, 14 ft·lbf)

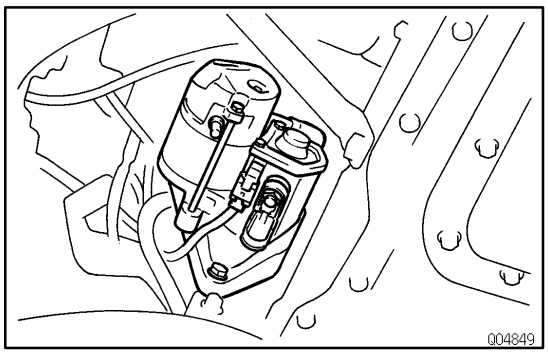

16. REMOVE STARTER

(a) Disconnect the connector and wire from the starter.
(b) Remove the set bolt of the starter from the lower side.
Torque: 39 N·m (400 kgf·cm, 29 ft·lbf)
(c) Remove the starter.

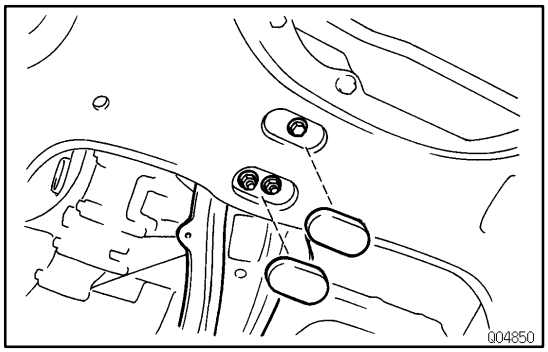

17. REMOVE CENTER CROSSMEMBER

(a) Remove the 2 grommets.
(b) Remove the set bolt and 2 nuts of the engine rear mounting insulator from the suspension member.
Torque: 80 N·m (820 kgf·cm, 59 ft·lbf)

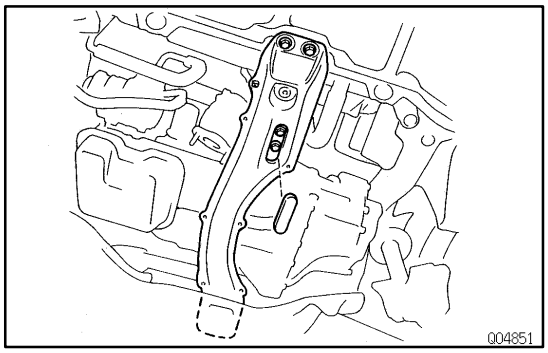

(c) Remove the grommet.
(d) Remove the 2 set bolts of the engine front mountig insulator.
Torque: 80 N·m (820 kgf·cm, 59 ft·lbf)
(e) Remove the 2 bolts and center crossmember.
Torque: 35 N·m (360 kgf·cm, 26 ft·lbf)

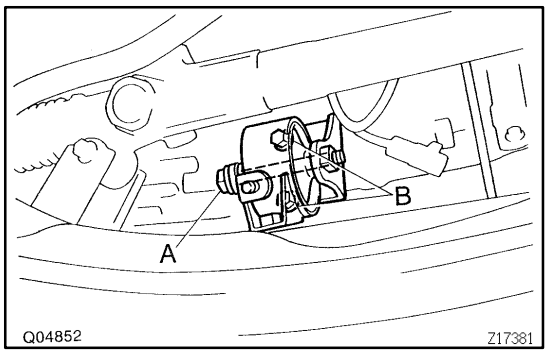

18. REMOVE ENGINE REAR MOUNTING BRACKET AND INSULATOR

Remove the 3 bolts, engine rear mounting bracket and insulator.

Torque:
Bolt A: 87 N·m (890 kgf·cm, 64 ft·lbf)
Bolt B: 77 N·m (790 kgf·cm, 57 ft·lbf)

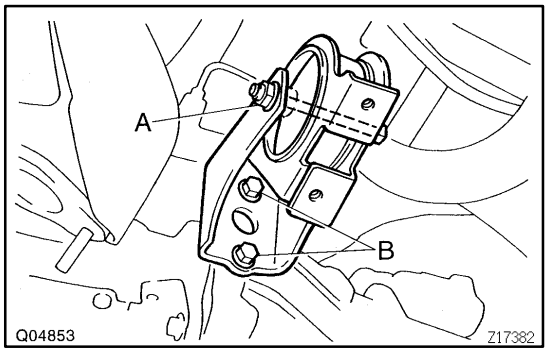

19. REMOVE ENGINE FRONT MOUNTING BRACKET AND INSULATOR

Remove the 3 bolts, nut, engine front mounting bracket and insulator.

Torque:
Nut A: 87 N·m (890 kgf·cm, 64 ft·lbf)
Bolt B: 77 N·m (790 kgf·cm, 57 ft·lbf)

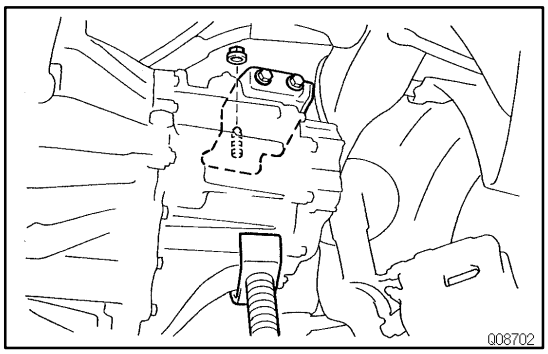

20. DISCONNECT ENGINE LEFT MOUNTING BRACKET FROM ENGINE LEFT MOUNTING INSULATOR

(a) Raise the transaxle and engine left side slightly with a jack.

(b) Remove the set nut of the engine left mounting insulator from the transaxle upper side.

Torque: 64 N·m (650 kgf·cm, 47 ft·lbf)

(c) Remove the 2 set bolts of the engine left mounting bracket from the transaxle lower side.

Torque: 64 N·m (650 kgf·cm, 47 ft·lbf)

21. JACK UP TRANSAXLE SLIGHTLY

Using a transmission jack, support the transaxle.

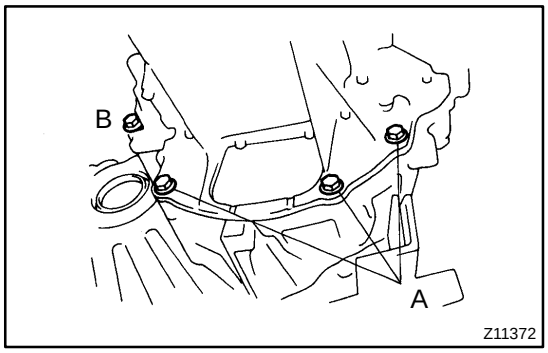

22. REMOVE TRANSAXLE MOUNTING BOLT FROM ENGINE REAR END PLATE SIDE

Remove the 4 transaxle mounting bolts.

Torque:

Bolt A: 23 N·m (230 kgf·cm, 17 ft·lbf)

Bolt B: 46 N·m (470 kgf·cm, 34 ft·lbf)

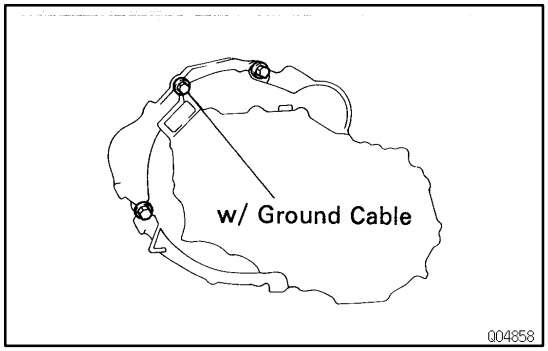

23. REMOVE TRANSAXLE

Lower the engine left side and remove the transaxle from the engine.

Torque: 64 N·m (650 kgf·cm, 47 ft·lbf)

HINT:

Align the input shaft with the clutch disc and install the transaxle to the engine.

CL068-04

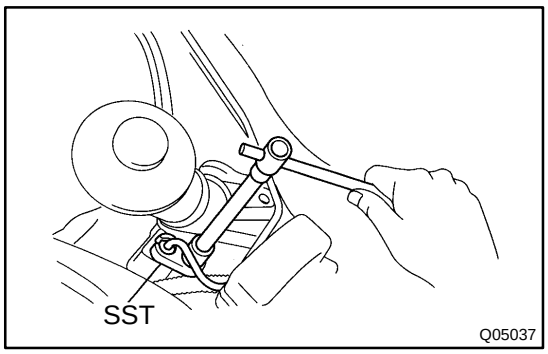

REMOVAL

1. DRAW OUT FLUID WITH SYRINGE

2. DISCONNECT CLUTCH LINE

Using SST, disconnect the clutch line. Use a container to catch the fluid.

SST 09023-00100

Torque: 15 N·m (155 kgf·cm, 11 ft·lbf)

3. REMOVE CLIP AND CLEVIS PIN

4. REMOVE 2 MOUNTING NUTS AND PULL OUT MASTER CYLINDER

Torque: 12 N·m (120 kgf·cm, 8.3 ft·lbf)

CL06D-04

REMOVAL

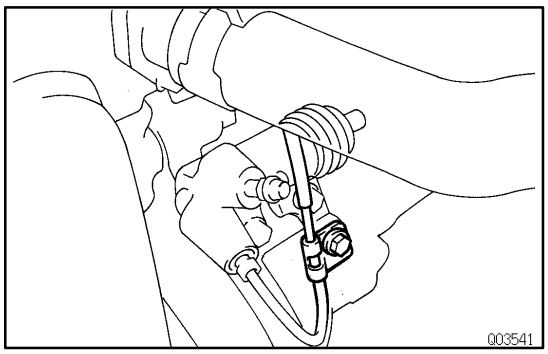

1. REMOVE BOLT AND CLAMP

Torque: 4.9 N·m (50 kgf·cm, 43 in.·lbf)

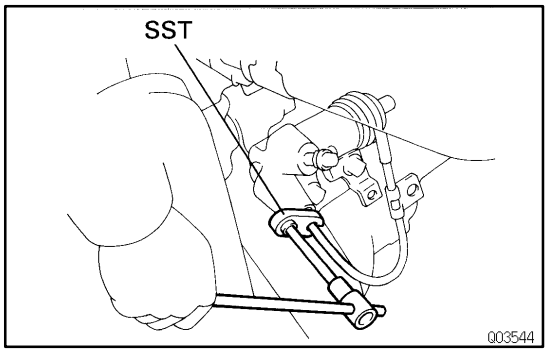

2. DISCONNECT CLUTCH LINE

Using SST, disconnect the clutch line. Use a container to catch the fluid.

SST 09023-00100

Torque: 15 N·m (155 kgf·cm, 11 ft·lbf)

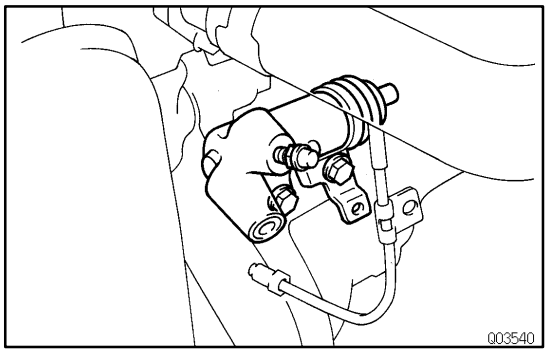

3. REMOVE RELEASE CYLINDER

Remove 2 bolts and pull out release cylinder.

Torque: 12 N·m (120 kgf·cm, 8.3 ft·lbf)

CL06I-04

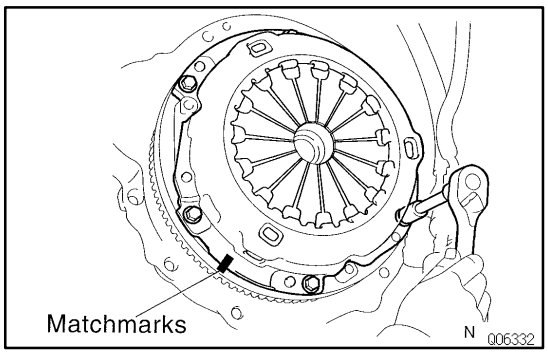

REMOVAL

1. REMOVE TRANSAXLE FROM ENGINE

C52: See page MX-4

S54: See page MX-4

2. REMOVE CLUTCH COVER AND DISC

(a) Place matchmarks on the flywheel and clutch cover.

(b) Loosen each set bolt one turn at a time until spring tension is released.

(c) Remove the set bolts, and pull off the clutch cover with the clutch disc.

NOTICE:

Do not drop the clutch disc.

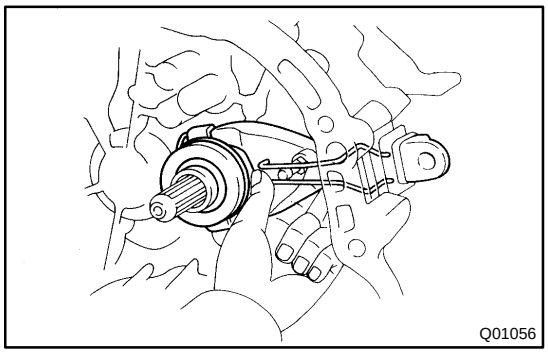

3. REMOVE RELEASE BEARING AND FORK FROM TRANSAXLE

Remove the release bearing together with the fork and then separate them.

SA12O-02

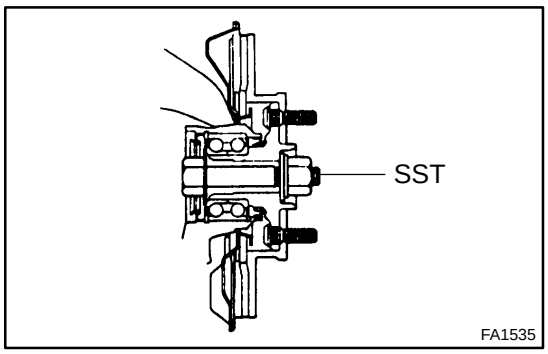

REMOVAL

NOTICE:

- **The hub bearing could be damaged if it is subjected to the vehicle weight, such as when moving the vehicle with the drive shaft removed. Therefore, if it is absolutely necessary to place the vehicle weight on the hub bearing, first support it with SST.**
  SST 09608-16042 (09608-02021, 09608-02041)
- **w/ ABS:**
  After disconnecting the drive shaft from the axle hub, work carefully so as not to damage the sensor rotor serrations on the drive shaft.

1. REMOVE FRONT WHEEL
Torque: 103 N·m (1,050 kgf·cm, 76 ft·lbf)

2. REMOVE ENGINE UNDER COVERS

3. DRAIN GEAR OIL (M/T) OR ATF (A/T)

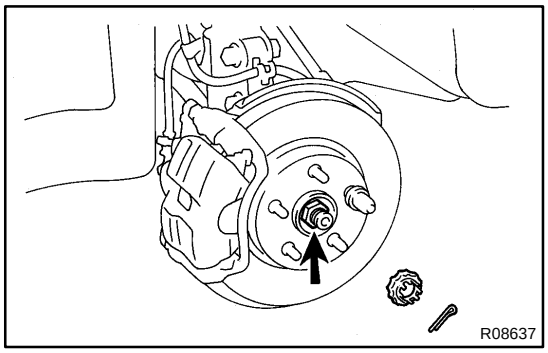

4. REMOVE DRIVE SHAFT LOCK NUT

(a) Remove the cotter pin and lock cap.
Torque: 216 N·m (2,200 kgf·cm, 159 ft·lbf)

(b) Loosen the bearing lock nut while depressing the brake pedal.

5. DISCONNECT TIE ROD END FROM STEERING KNUCKLE (See page SA-10)

6. DISCONNECT STABILIZER BAR LINK FROM LOWER SUSPENSION ARM (See page SA-10)

7. DISCONNECT LOWER BALL JOINT FROM LOWER SUSPENSION ARM (See page SA-10)

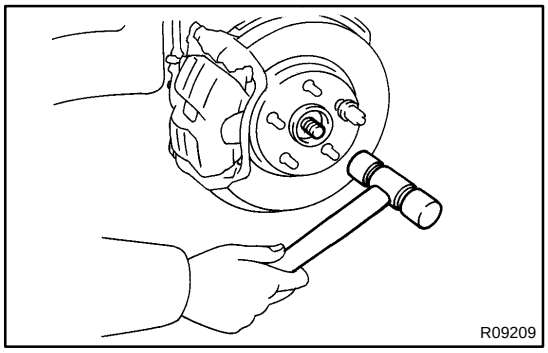

8. DISCONNECT DRIVE SHAFT FROM AXLE HUB

Using a plastic hammer, disconnect the drive shaft from the axle hub.

NOTICE:

Be careful not to damage the inner oil seal, boots and ABS speed sensor rotor.

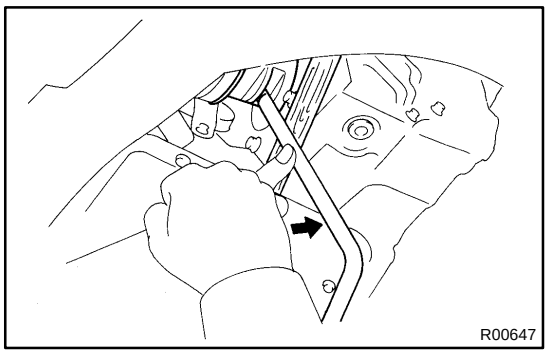

9. REMOVE LH DRIVE SHAFT

(a) Using a hub nut wrench and hammer handle or equivalent, pull out the drive shaft, as shown.

NOTICE:

Be careful not to damage the dust cover, boots, oil seal and transaxle body.

HINT:

At the time of installation, please refer to the following items.

- Coat gear oil to the inboard joint tulip and differential case sliding surface.
- Before installing the drive shaft, set the snap ring with opening side facing downward.
- Whether or not the drive shaft is making contact with the pinion shaft can be known by the sound or feeling when driving it in.
- After installation, check that there is 2 - 3 mm (0.08 - 0.12 in.) of play in axial direction.
- After installation, check that the drive shaft cannot be pulled out by hand.

(b) Using a snap ring expander, remove the snap ring.

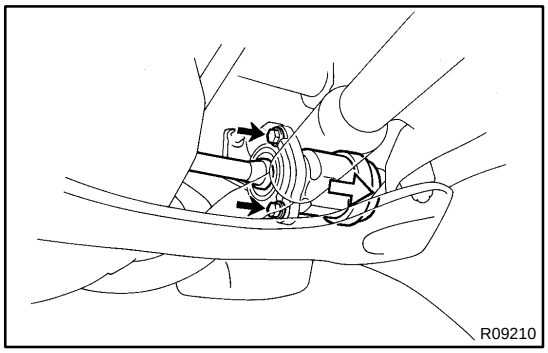

10. REMOVE RH DRIVE SHAFT

(a) Remove the 2 bolts of the center bearing bracket, and pull out the RH drive shaft together with the center bearing case and center drive shaft.

Torque: 64 N·m (650 kgf·cm, 47 ft·lbf)

(b) Remove the center drive shaft with the RH drive shaft through the bearing bracket.

NOTICE:

Do not damage the oil seal lip.

HINT:

At the time of installation, coat gear oil to the center drive shaft and differential case sliding surface.

SA132-01

REMOVAL

1. REMOVE FRONT AXLE HUB
(See page SA-10)

2. REMOVE LOWER BALL JOINT

(a) Using a screwdriver, remove the dust deflector.

(b) Remove the cotter pin and nut.

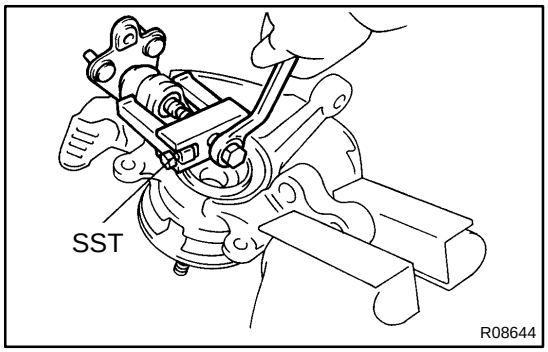

(c) Using SST, remove the lower ball joint.
SST 09628-6201 1

SA130-01

REMOVAL

1. REMOVE FRONT WHEEL
Torque: 103 N·m (1,050 kgf·cm, 76 ft·lbf)

2. REMOVE ENGINE UNDER COVERS

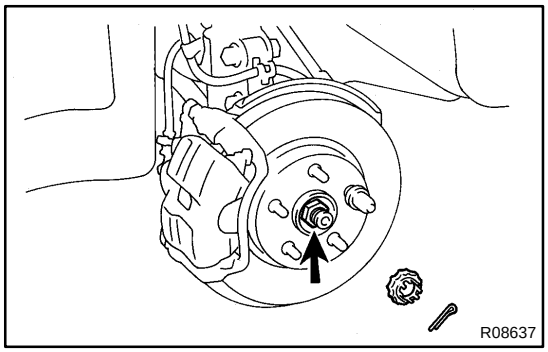

3. REMOVE DRIVE SHAFT LOCK NUT

(a) Remove the cotter pin and lock cap.

(b) While applying the brakes, remove the nut.
Torque: 216 N·m (2,200 kgf·cm, 159 ft·lbf)

4. DISCONNECT BOTH TIE ROD ENDS FROM STEERING KNUCKLE (See page SA-10)

5. DISCONNECT BOTH STABILIZER BAR LINKS FROM 2 LOWER SUSPENSION ARMS (See page SA-10)

6. DISCONNECT BOTH LOWER SUSPENSION ARMS FROM LOWER BALL JOINTS (See page SA-10)

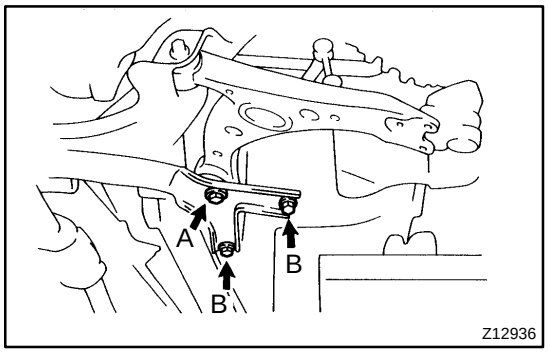

7. REMOVE 6 BOLTS FROM BODY
Torque:
A: 167 N·m (1,700 kgf·cm, 123 ft·lbf)
B: 175 N·m (1,800 kgf·cm, 130 ft·lbf)

HINT:
At the time of installation, after stabilizing the suspension, torque the bolts.

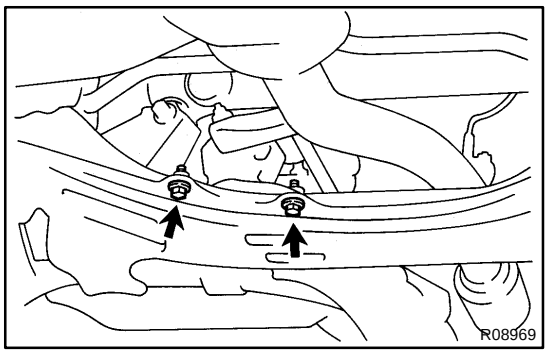

8. REMOVE FRONT SUB-FRAME

(a) Support the transaxle with a jack.

(b) Remove the 2 exhaust pipe support bracket set bolts.
Torque: 19 N·m (195 kgf·cm, 14 ft·lbf)

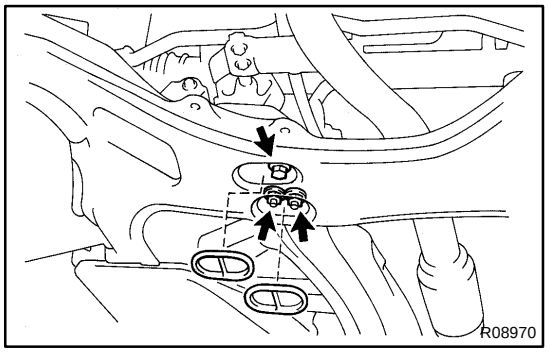

(c) Remove the 2 grommets and centermember set bolt.
Torque: 80 N·m (820 kgf·cm, 59 ft·lbf)

(d) Remove the 2 centermember set nuts.
Torque: 80 N·m (820 kgf·cm, 59 ft·lbf)

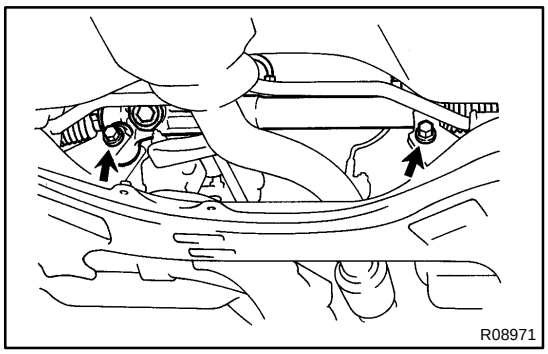

(e) Remove the 2 power steering gear assembly set bolts and nuts.
Torque: 127 N·m (1,300 kgf·cm, 94 ft·lbf)

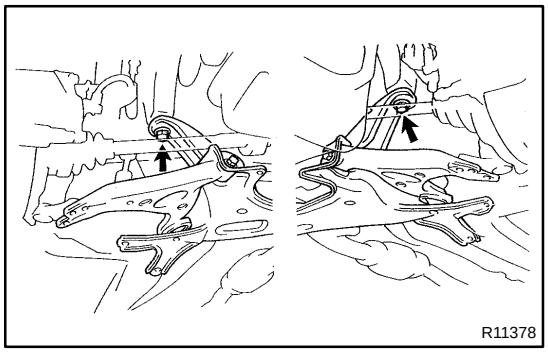

(f) Support the front sub-frame with a jack.
(g) Remove the 2 bolts and lower the front sub-frame with the lower suspension arms.
Torque: 127 N·m (1,300 kgf·cm, 94 ft·lbf)

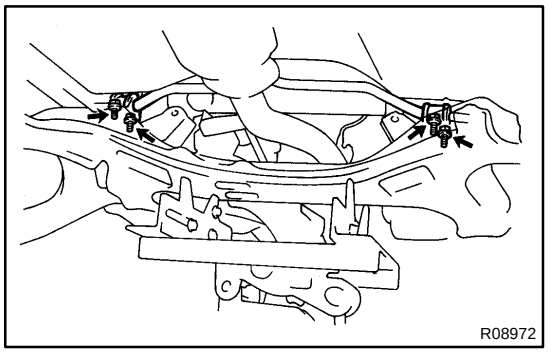

(h) Remove the 4 stabilizer bar bracket set bolts.
Torque: 19 N·m (195 kgf·cm, 14 ft·lbf)

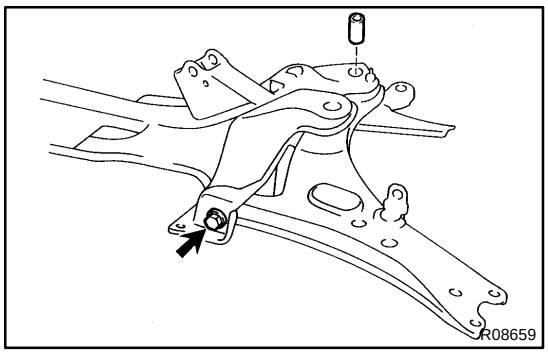

9. REMOVE LOWER SUSPENSION ARM
(a) Remove the collar.
(b) Remove the bolt and disconnect the lower suspension arm.
Torque: 157 N·m (1,600 kgf·cm, 116 ft·lbf)

HINT:
At the time of installation, after stabilizing the suspension, torque the bolt.

SA24V-01

REMOVAL

1. REMOVE FRONT WHEEL

Torque: 103 N·m (1,050 kgf·cm, 76 ft·lbf)

2. REMOVE FLEXIBLE HOSE AND ABS SPEED SENSOR WIRE HARNESS (w/ ABS) FROM SHOCK ABSORBER

Torque:

Flexible hose x Shock absorber:

19 N·m (195 kgf·cm, 14 ft·lbf)

ABS speed sensor wire harness x Shock absorber:

5.0 N·m (51 kgf·cm, 44 in.·lbf)

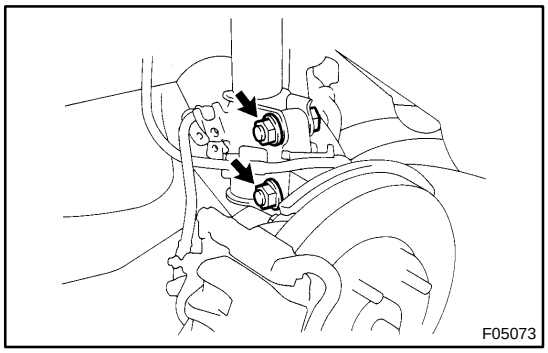

3. DISCONNECT SHOCK ABSORBER FROM STEERING KNUCKLE

Remove the 2 nuts and bolts, and disconnect the shock absorber from the steering knuckle.

Torque: 153 N·m (1,560 kgf·cm, 113 ft·lbf)

HINT:

At the time of installation, coat the nut's threads with engine oil and tighten the nut.

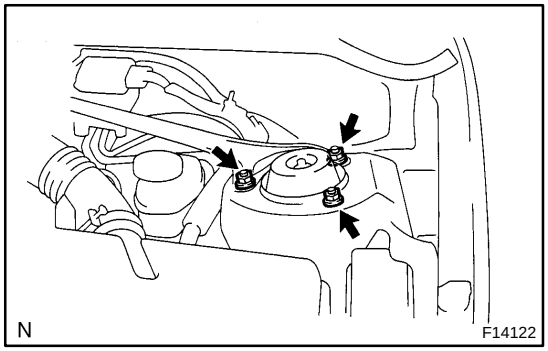

4. REMOVE SHOCK ABSORBER WITH COIL SPRING

(a) Remove the 3 nuts on the upper side of the shock absorber.

Torque: 80 N·m (820 kgf·cm, 59 ft·lbf)

(b) Remove the shock absorber and coil spring.

SA137-01

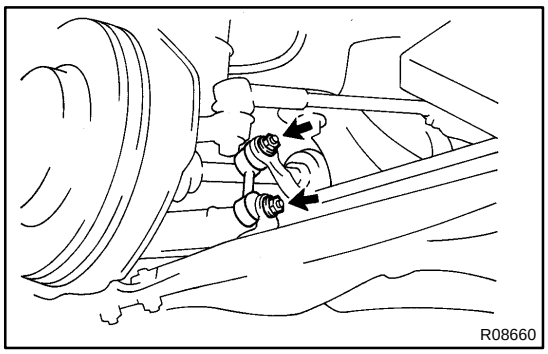
R08660

REMOVAL

1. REMOVE BOTH STABILIZER BAR LINKS

(a) Remove the 2 nuts and stabilizer bar link.

HINT:

If the ball joint turns together with the nut, use a 5 mm hexagon wrench to hold the stud.

Torque: 44 N·m (450 kgf·cm, 33 ft·lbf)

(b) Employ the same manner described above to the other side.

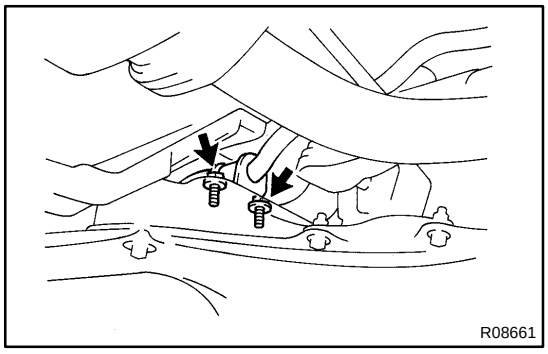
R08661

2. REMOVE BRACKETS AND BUSHINGS

(a) Remove the 4 bolts, 2 brackets and 2 bushings.

Torque: 19 N·m (195 kgf·cm, 14 ft·lbf)

(b) Remove the stabilizer bar from the left hand side.

BO1DU-03

REMOVAL

1. POSITION WIPER ARM

HINT:

For easy removal of the wiper arms, operate the wipers and turn the ignition switch OFF when the wiper arms are about half-way on the down ward sweep.

2. REMOVE THESE PARTS:

(a) Front wiper arms

(b) Cowl top ventilator louver

3. REMOVE FRONT WIPER MOTOR AND LINK

(a) Remove the 6 bolts of the wiper link.

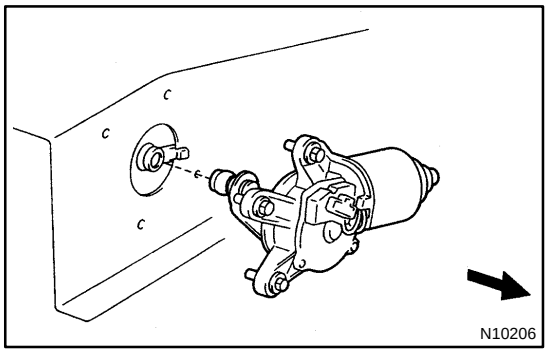

(b) Disconnect the connector, then loosen the 4 bolts of the motor.

(c) Clip the claw of the wiper link onto the panel.

(d) Disconnect the motor from the wiper link to remove the motor.

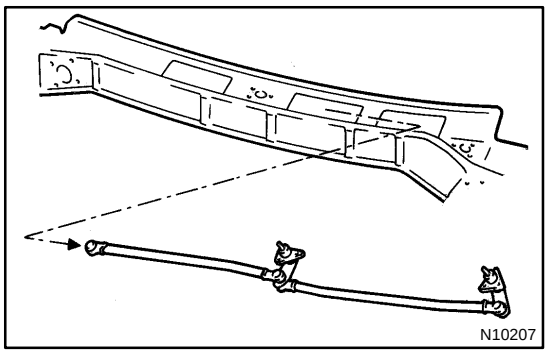

(e) Remove the wiper link through the service hole.

SR0K8-03

REMOVAL

1. PLACE FRONT WHEELS FACING STRAIGHT AHEAD

2. w/ Airbag:
REMOVE STEERING WHEEL PAD
(See page SR-12)

3. w/o Airbag:
REMOVE STEERING WHEEL PAD
(See page SR-12)

4. REMOVE RH AND LH ENGINE UNDER COVERS

Remove 18 bolts.

5. DISCONNECT RH AND LH TIE ROD ENDS
(See page SA-10)

6. 7A-FE Engine:
REMOVE OXYGEN SENSOR

7. REMOVE FRONT EXHAUST PIPE

(a) Remove the 2 bolts.

(b) Remove the 2 nuts and gasket.

(c) Remove the 2 bolts, 2 nuts and gasket.

8. DISCONNECT INTERMEDIATE NO.2 SHAFT
(See page SR-12)

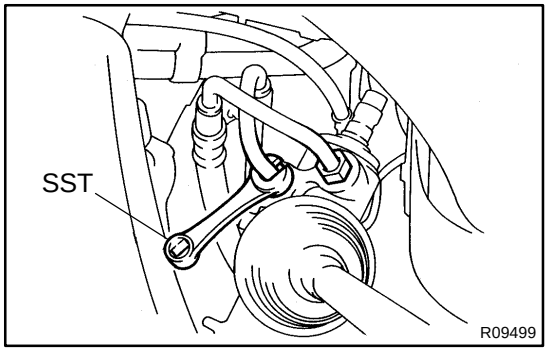

9. DISCONNECT PRESSURE FEED AND RETURN TUBES

Using SST, disconnect the tube.

SST 09631-22020

10. DISCONNECT TUBE CLAMP BRACKET

Remove the 2 bolts.

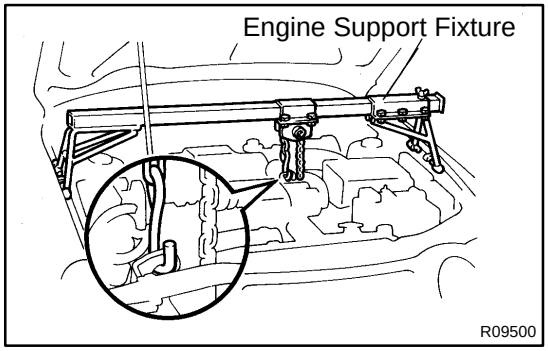

11. SUPPORT ENGINE

Using an engine support fixture, support the engine.

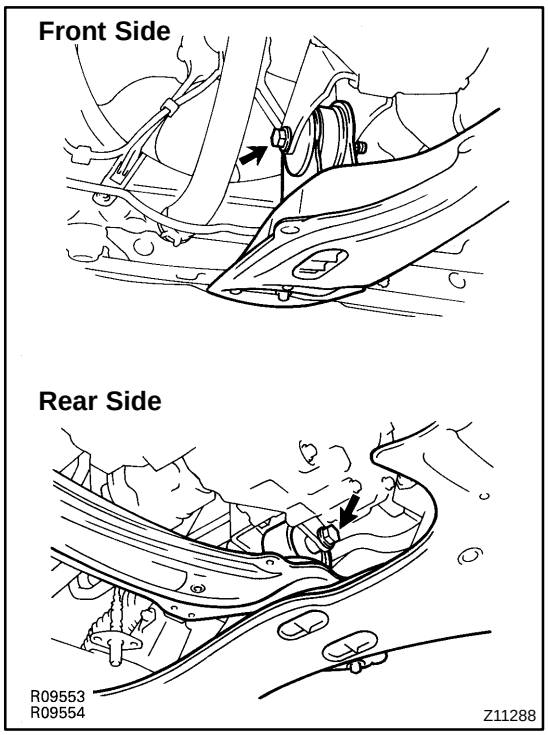

12. DISCONNECT RH AND LH LOWER SUSPENSION ARMS
(See page SA-43)

13. DISCONNECT 2 ENGINE MOUNTINGS

(a) Front side:
Remove the bolt and nut.

(b) Rear side:
Remove the bolt.

14. REMOVE FRONT SUB-FRAME WITH PS GEAR ASSEMBLY
(See page SA-43)

15. REMOVE PS GEAR ASSEMBLY

Remove 2 gear assembly set bolts and nuts from the front sub-frame.

BO1EG-03

REMOVAL

1. REMOVE THESE PARTS:

(a) Rear seat
(See page BO-123)

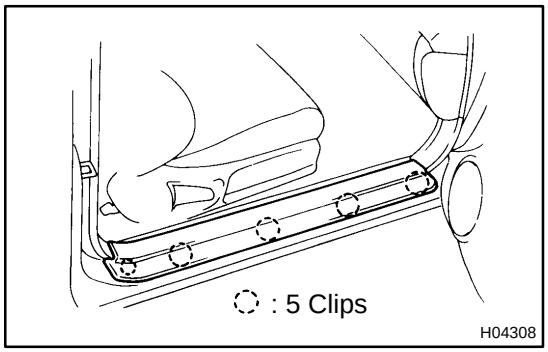

(b) Front door scuff inside plate
(c) Package tray trim panel
(d) Deck trim rear cover
(e) Luggage compartment mat

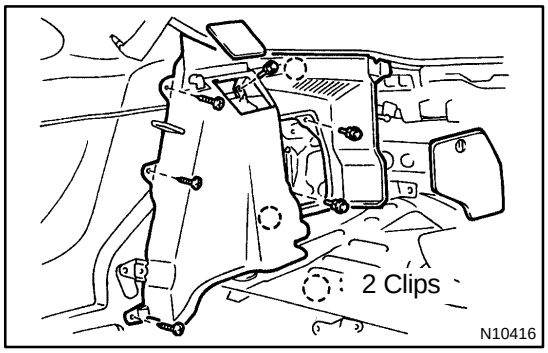

(f) Deck trim side panel
(g) Rear seatback hinge
(h) Rear seatback lock striker

2. REMOVE QUARTER TRIM PANEL

(a) Using a screwdriver, remove the speaker grille.

HINT:
Tape the screwdriver tip before use.

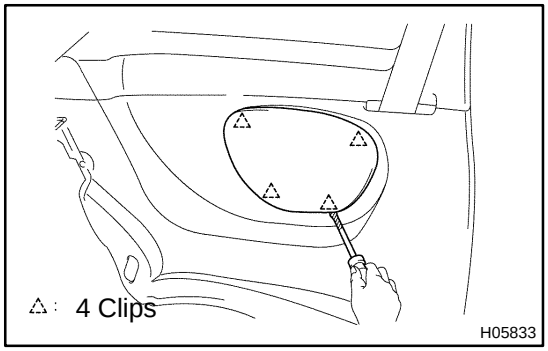

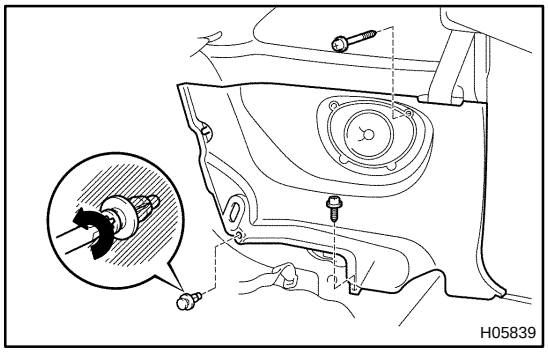

(b) Remove the 2 screws and clip.

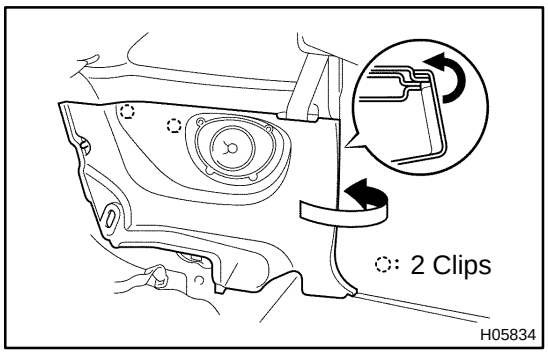

(c) Using a screwdriver, remove the quarter trim panel.

HINT:

Tape the screwdriver tip before use.

3. REMOVE ROOF SIDE INNER GARNISH

(a) Remove the front seat outer belt shoulder anchor bolt.

(b) Remove the rear seat outer belt floor anchor bolt.

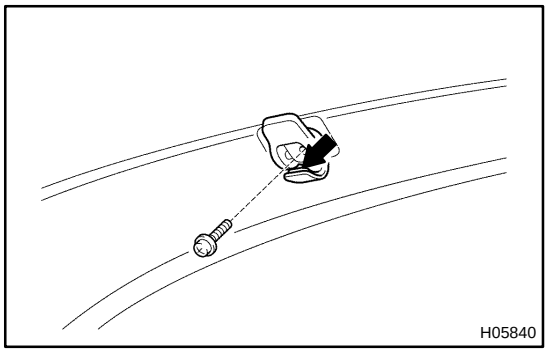

(c) Remove the screw and coat hook.

(d) Remove the clip.

(e) Using a screwdriver, pull up the roof side inner garnish.

HINT:

Tape the screwdriver tip before use.

(f) Remove the rear seat outer bolt through the roof side inner garnish, then remove the roof side inner garnish.

4. REMOVE ROOF SIDE RAIL WEATHERSTRIP

(a) Using the clip remover, remove the 3 clips from the rear side of the weatherstrip.

(b) Remove the rear side of the weatherstrip from the retainer.

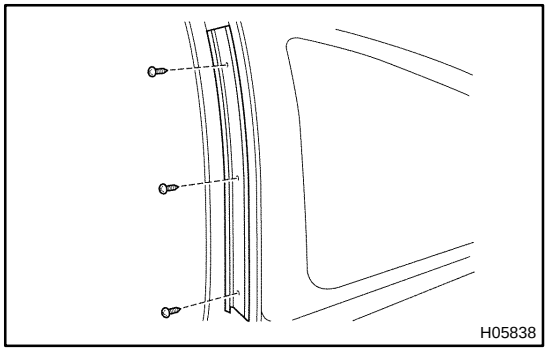

5. REMOVE ROOF SIDE RAIL WEATHERSTRIP RETAINER

Remove the 3 screws and roof side rail weatherstrip retainer.

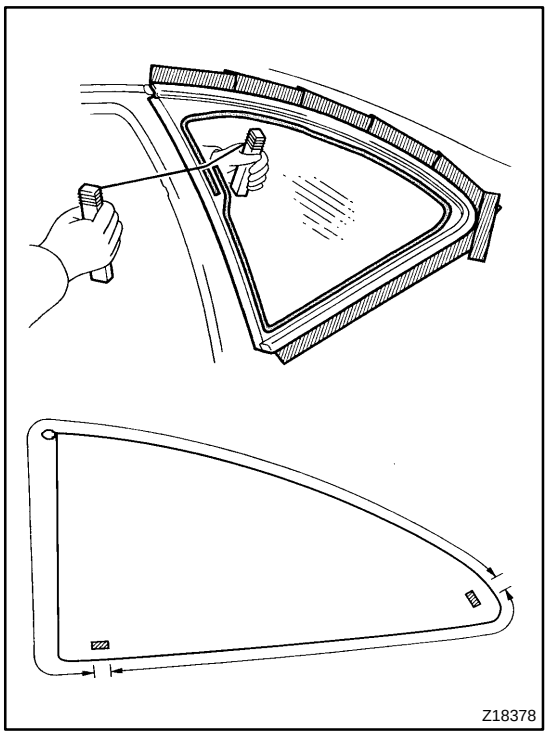

6. REMOVE QUARTER WINDOW GLASS

(a) Push piano wire through from the interior.

(b) The both wire ends to a wooden block or similar object.

HINT:

Apply adhesive tape to the outer surface to keep the surface from the being scratched.

NOTICE:

When separating the glass, take care not to damage the paint and exterior.

(c) Cut the adhesive by pulling the piano wire around it.

HINT:

Cut the adhesive areas, as shown in the illustration, leaving the adhesive where the pins are.

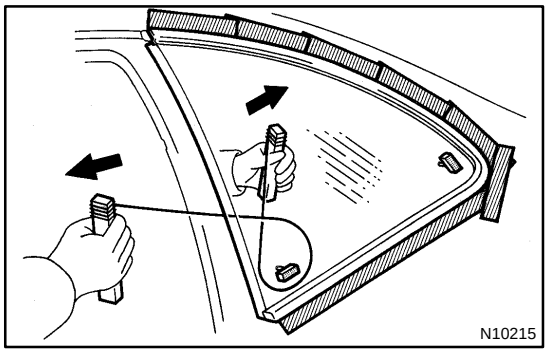

(d) Using piano wire, as shown in the illustration, cut off the adhered part to the pins.

(e) Remove the glass.

NOTICE:

Leave as much of the adhesive on the body as possible when cutting off the glass.

SA13B-02

REMOVAL

1. REMOVE REAR WHEEL
Torque: 103 N·m (1,050 kgf·cm, 76 ft·lbf)

2. w/ Disc brake:
REMOVE BRAKE CALIPER AND DISC

(a) Remove the 2 bolts and brake caliper.
Torque: 47 N·m (475 kgf·cm, 34 ft·lbf)

(b) Support the brake caliper securely.

(c) Remove the disc.

3. w/ Drum brake:
REMOVE BRAKE DRUM

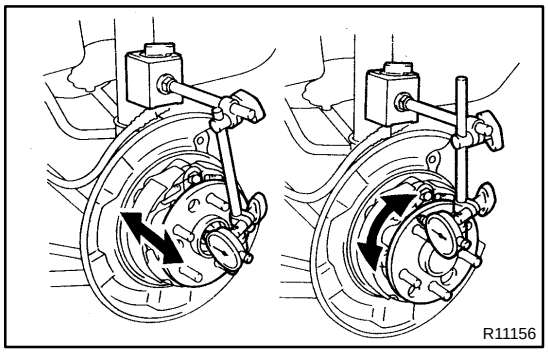
R11156

4. CHECK BEARING BACKLASH AND AXLE HUB DEVIATION

(a) Using a dial indicator, check the backlash near the center of the axle hub.
Maximum: 0.05 mm (0.0020 in.)

If the backlash exceeds the maximum, replace the axle hub with the bearing.

(b) Using a dial indicator, check the deviation at the surface of the axle hub outside the hub bolt.
Maximum: 0.07 mm (0.0028 in.)

If the deviation exceeds the maximum, replace the axle hub with bearing.

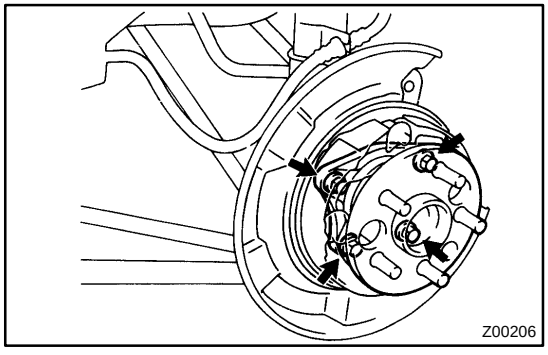
Z00206

5. REMOVE REAR AXLE HUB

(a) Remove the 4 bolts and rear axle hub.
Torque: 80 N·m (820 kgf·cm, 59 ft·lbf)

(b) Remove the O-ring.

HINT:
At the time of installation, coat a new O-ring with MP grease.

6. w/ Drum brake:
REMOVE BRAKE HOSE FROM SHOCK ABSORBER
Torque: 19 N·m (192 kgf·cm, 14 ft·lbf)

7. DISCONNECT BACKING PLATE FROM REAR AXLE CARRIER

(a) Disconnect the backing plate from the rear axle carrier.

(b) Support the backing plate securely.

8. w/ ABS:

DISCONNECT ABS SPEED SENSOR

Disconnect the ABS speed sensor from the rear axle carrier.

Torque: 8.0 N·m (82 kgf·cm, 71 in.·lbf)

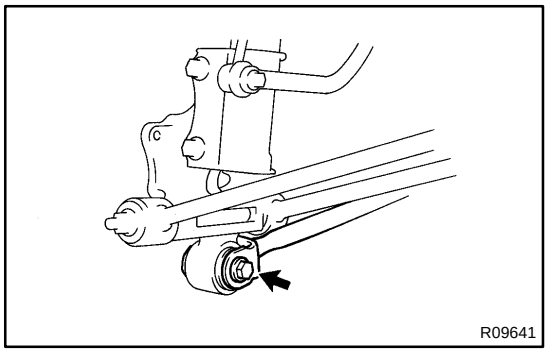

9. REMOVE REAR AXLE CARRIER

(a) Remove the nut and bolt, disconnect the strut rod from the rear axle carrier.

Torque: 113 N·m (1,150 kgf·cm, 83 ft·lbf)

HINT:

At the time of installation, after stabilizing the suspension, torque the nut.

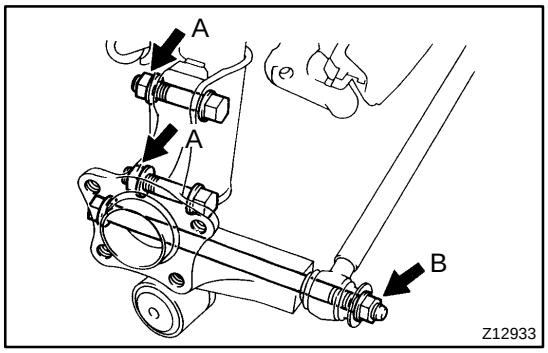

(b) Remove the 2 nuts from the shock absorber lower set bolts.

HINT:

Do not remove the bolts.

Torque:

Nut A: 255 N·m (2,600 kgf·cm, 188 ft·lbf)

HINT:

At the time of installation, after stabilizing the suspension, torque the nuts.

(c) Remove the nut and bolt, disconnect the lower suspension arms from the axle carrier.

Torque:

Nut B: 197 N·m (2,010 kgf·cm, 145 ft·lbf)

HINT:

At the time of installation, after stabilizing the suspension, torque the nut.

(d) Pull out the 2 bolts from the shock absorber, remove rear axle carrier.

SA13M-01

REMOVAL

1. REMOVE REAR WHEEL

Torque: 103 N·m (1,050 kgf·cm, 76 ft·lbf)

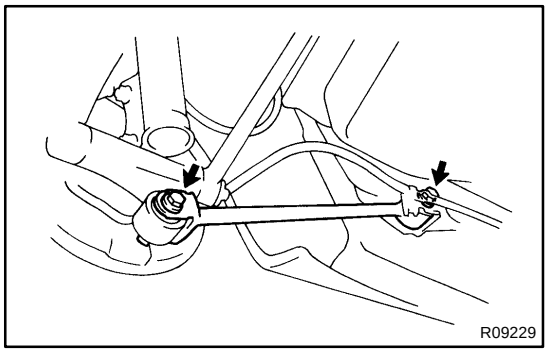

2. REMOVE STRUT ROD

Remove the 2 nuts, bolts and strut rod.

Torque: 113 N·m (1,150 kgf·cm, 83 ft·lbf)

HINT:

At the time of installation, after stabilizing the suspension, torque the nuts.

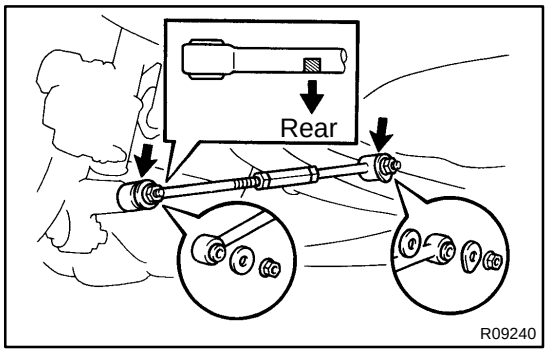

3. REMOVE NO.2 LOWER SUSPENSION ARM

(a) Remove the 2 nuts and washers.

Torque: 197 N·m (2,010 kgf·cm, 145 ft·lbf)

HINT:

At the time of installation, after stabilizing the suspension, torque the nuts.

(b) Remove the No.2 lower suspension arm.

HINT:

At the time of installation, face the paint mark rearward.

4. REMOVE NO.1 LOWER SUSPENSION ARM

(a) Support the suspension member with a jack.

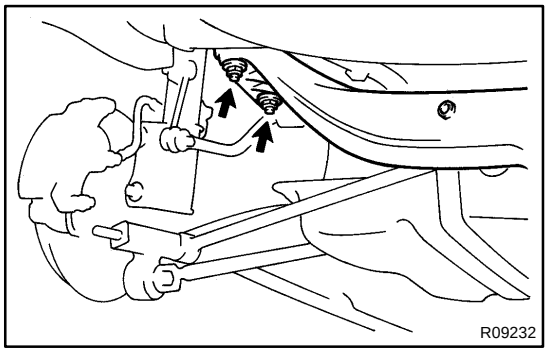

(b) Remove the 4 nuts from the suspension member.

Torque: 137 N·m (1,400 kgf·cm, 101 ft·lbf)

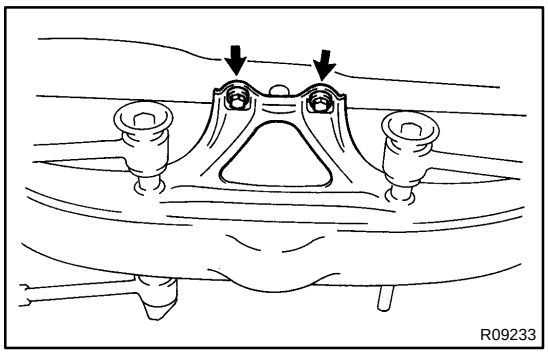

(c) Remove the 2 bolts.
Torque: 20 N·m (195 kgf·cm, 14 ft·lbf)

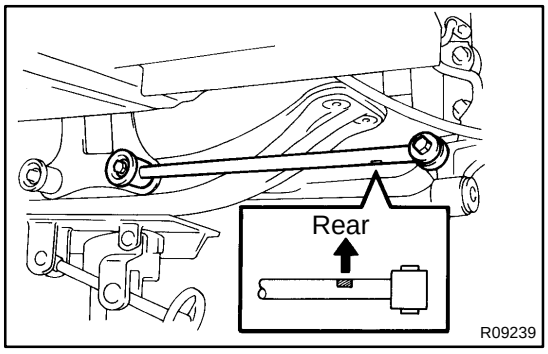

(d) Lower the suspension member.
(e) Remove the No.1 lower suspension arm with the 2 bolts and washer.

HINT:
At the time of installation, face the paint mark rearward.

SA13F-01

REMOVAL

1. COUPE:
REMOVE REAR SEAT AND PACKAGE TRAY TRIM PANEL (See page BO-123 and BO-51)

2. REMOVE REAR WHEEL
Torque: 103 N·m (1,050 kgf·cm, 76 ft·lbf)

3. DISCONNECT FLEXIBLE HOSE AND ABS SPEED SENSOR WIRE HARNESS (w/ ABS) FROM SHOCK ABSORBER
Torque:
Flexible hose x Shock absorber
19 N·m (192 kgf·cm, 14 ft·lbf)
ABS speed sensor wire harness x Shock absorber
5.0 N·m (51 kgf·cm, 44 in.·lbf)

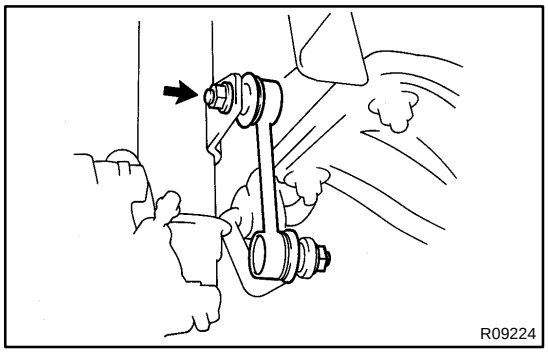

4. DISCONNECT STABILIZER BAR LINK
Remove the nut and disconnect the stabilizer bar link from the shock absorber.
HINT:
If the ball joint stud turns together with the nut, use a 5 mm hexagon wrench to hold the stud.
Torque: 44 N·m (450 kgf·cm, 33 ft·lbf)

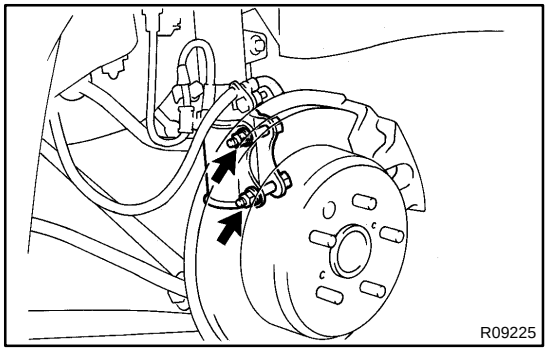

5. REMOVE SHOCK ABSORBER AND COIL SPRING
(a) Loosen the 2 nuts on the lower side of the shock absorber.
NOTICE:
When removing/installing bolts, stop the nut from rotating and loosen/torque the bolt.
Torque: 255 N·m (2,600 kgf·cm, 188 ft·lbf)
(b) Support the rear axle carrier with a jack.
(c) LIFTBACK:
Remove the service hole cover.

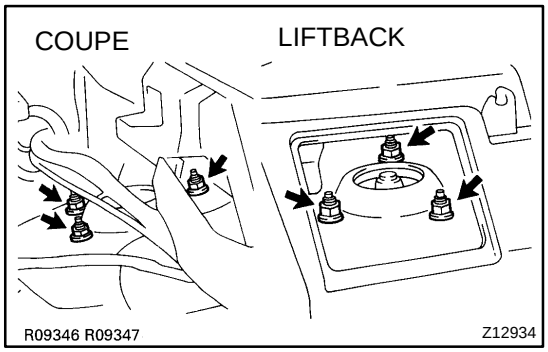

(d) Remove the 3 suspension support nuts.
Torque: 39 N·m (400 kgf·cm, 29 ft·lbf)
(e) Lower the rear axle carrier and remove the 2 bolts.
(f) Remove the shock absorber with the coil spring.

BO1DZ-03

REMOVAL

1. REMOVE REAR WIPER ARM AND BLADE

Remove the nut and rear wiper arm.

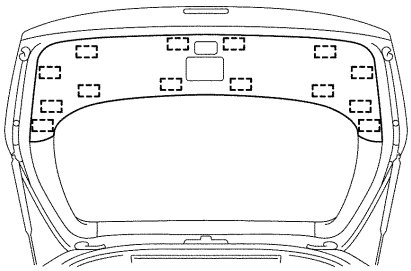

: 14 Clips

H05844

2. REMOVE BACK DOOR TRIM BOARD

Using a screwdriver, remove the back door trim board.

HINT:

Tape the screwdriver tip before use.

3. REMOVE REAR WIPER MOTOR

(a) Disconnect the connector.

(b) Remove the 3 bolts and rear wiper motor.

MX081-04

REMOVAL

1. REMOVE BATTERY AND AIR CLEANER CASE ASSEMBLY WITH AIR HOSE

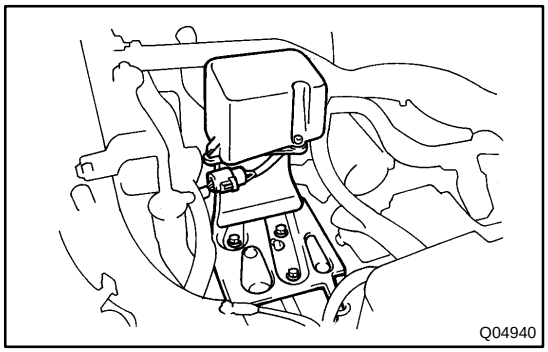
Q04940

2. w/ Cruise Control:
REMOVE CRUISE CONTROL ACTUATOR

(a) Disconnect the connector.
(b) Remove the 3 bolts and cruise control actuator with the bracket.

3. REMOVE STARTER

(a) Disconnect the connector and wire from the starter.
(b) Remove the 2 bolts and starter.
Torque: 39 N·m (400 kgf·cm, 29 ft·lbf)

4. REMOVE CLUTCH RELEASE CYLINDER AND LINE CLAMP

(a) Remove the 2 bolts and release cylinder.
Torque: 12 N·m (120 kgf·cm, 9 ft·lbf)
(b) Remove the 2 bolts and line clamps.

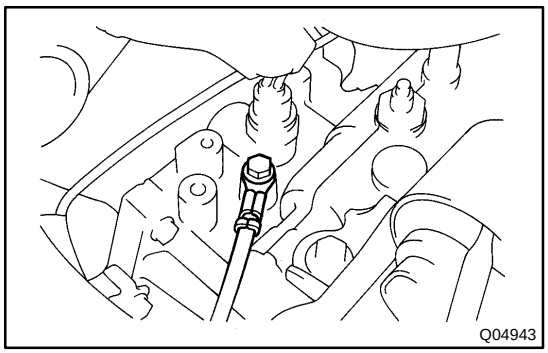
Q04943

5. DISCONNECT GROUND CABLE
Torque: 19 N·m (195 kgf·cm, 14 ft·lbf)

6. DISCONNECT BACK-UP LIGHT SWITCH AND VEHICLE SPEED SENSOR CONNECTORS

7. DISCONNECT CONTROL CABLE

(a) Remove the 2 clips and washers.
(b) Remove the 2 clips from the cables.

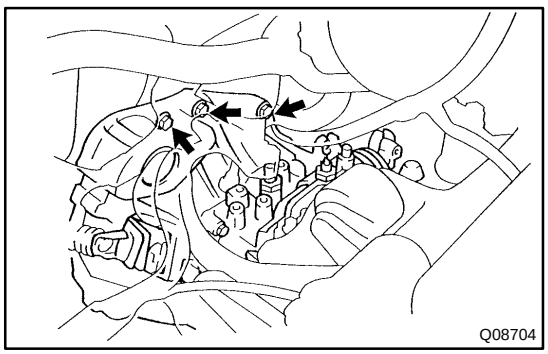
Q08704

8. REMOVE 3 TRANSAXLE MOUNTING BOLTS

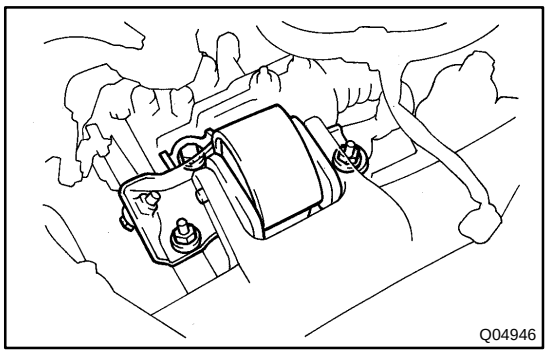

9. REMOVE ENGINE LEFT MOUNTING BOLT AND NUT

Remove the bolt and 2 nuts of engine left mounting on the upper side.

Torque: 64 N·m (650 kgf·cm, 47 ft·lbf)

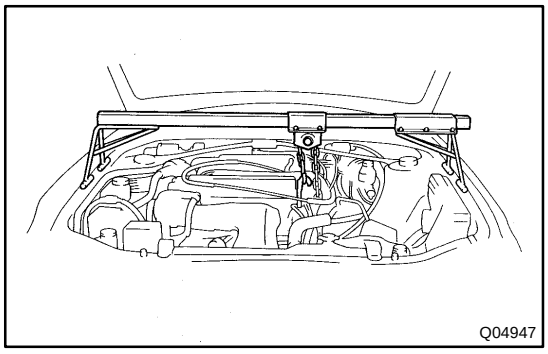

10. INSTALL ENGINE SUPPORT FIXTURE

11. REMOVE FRONT WHEEL

Torque: 103 N·m (1,050 kgf·cm, 76 ft·lbf)

12. RAISE VEHICLE

NOTICE:

Make sure that the vehicle is securely supported.

13. REMOVE LH AND RH ENGINE UNDER COVERS

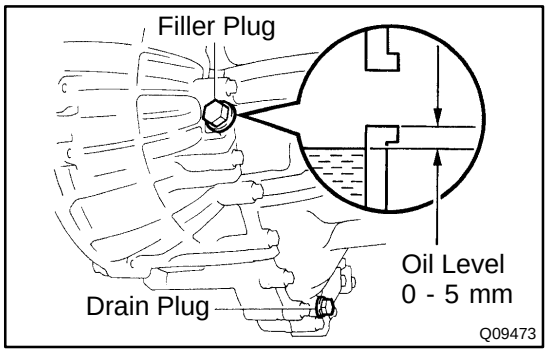

14. DRAIN TRANSAXLE OIL

Oil grade: API GL-4 or GL-5
Viscosity: SAE 75W-90
Capacity: 2.2 liters (2.3 US qts, 1.9 Imp. qts)
Torque: 49 N·m (500 kgf·cm, 36 ft·lbf)

15. REMOVE LH AND RH FRONT DRIVE SHAFTS

(See page SA-26)

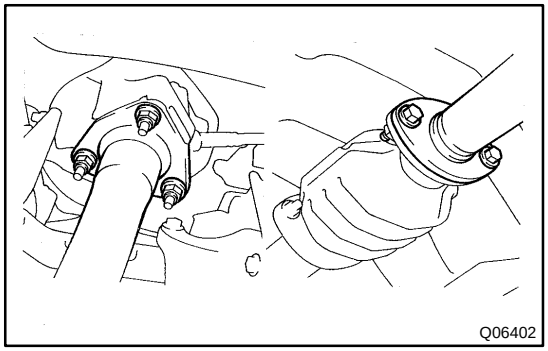

16. REMOVE FRONT EXHAUST PIPE

(a) Remove the 3 nuts and exhaust front pipe with the gasket.
Torque: 62 N·m (630 kgf·cm, 46 ft·lbf)

(b) Remove the 2 nuts, bolts and gasket.
Torque: 43 N·m (440 kgf·cm, 32 ft·lbf)

(c) Remove the nut, 4 bolts and exhaust pipe support bracket.
Torque: 19 N·m (195 kgf·cm, 14 ft·lbf)

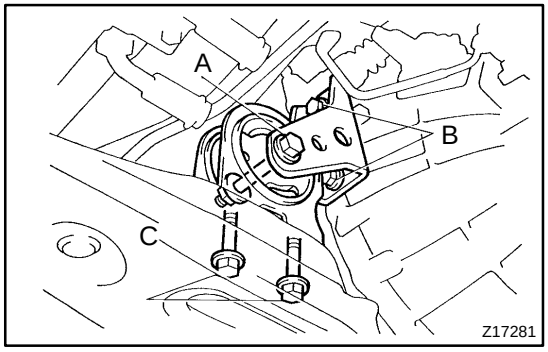

17. REMOVE ENGINE FRONT MOUNTING INSULATOR AND BRACKET

(a) Remove the grommet.

(b) Remove the nut and through bolt.
Torque:
Bolt A: 87 N·m (890 kgf·cm, 64 ft·lbf)

(c) Remove the 4 bolts, insulator and bracket.
Torque:
Bolt B: 77 N·m (790 kgf·cm, 57 ft·lbf)
Bolt C: 80 N·m (820 kgf·cm, 59 ft·lbf)

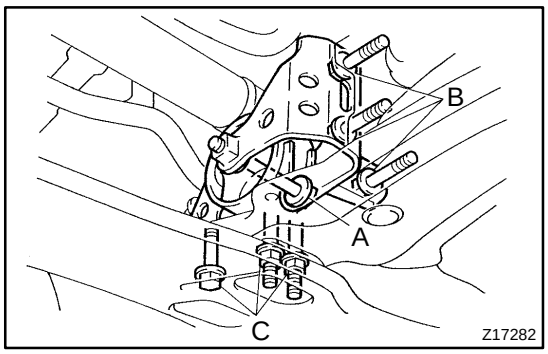

18. REMOVE ENGINE REAR MOUNTING INSULATOR AND BRACKET

(a) Remove the 2 grommets.

(b) Remove the through bolt.

Torque:
Bolt A: 87 N·m (890 kgf·cm, 64 ft·lbf)

(c) Remove the 4 bolts, 2 nuts, insulator and bracket.

Torque:
Bolt B: 77 N·m (790 kgf·cm, 57 ft·lbf)
Bolt and Nut C: 80 N·m (820 kgf·cm, 59 ft·lbf)

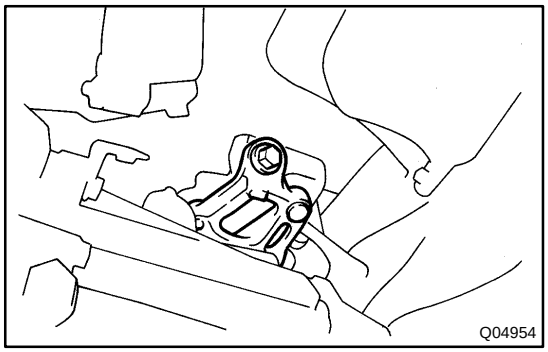

19. REMOVE ENGINE LEFT MOUNTING BOLT

Remove the bolt of engine left mounting on the lower side.

Torque: 64 N·m (650 kgf·cm, 47 ft·lbf)

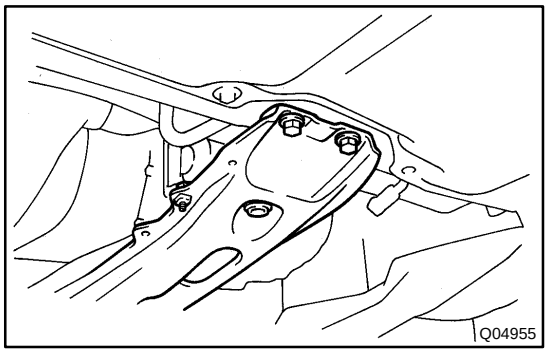

20. REMOVE CENTER MEMBER

(a) Remove the bolt and pipe bracket.

(b) Remove the 2 bolts and center member.

Torque: 52 N·m (530 kgf·cm, 38 ft·lbf)

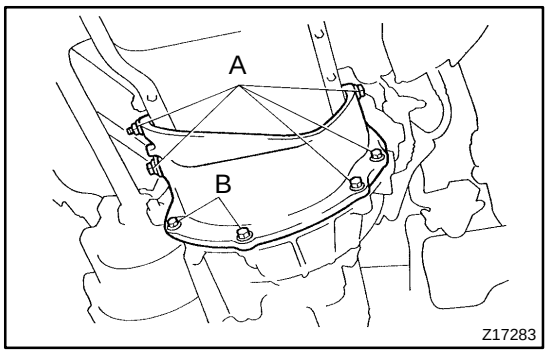

21. REMOVE STIFFENER PLATE

Remove the 6 bolts, nut and stiffener plate.

Torque:
Bolt and Nut A: 43 N·m (440 kgf·cm, 32 ft·lbf)
Bolt B: 21 N·m (210 kgf·cm, 15 ft·lbf)

22. JACK UP TRANSAXLE SLIGHTLY

Using a transmission jack, support the transaxle.

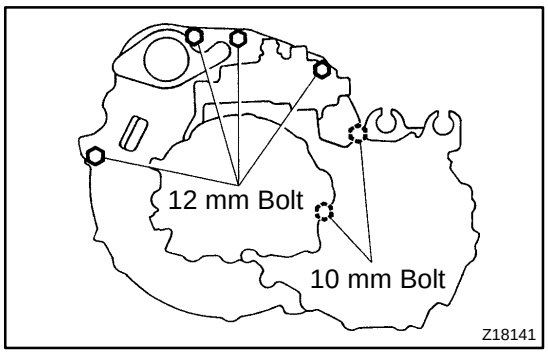

23. REMOVE TRANSAXLE

(a) Remove the transaxle mounting bolts.
Torque:
12 mm bolt: 64 N·m (650 kgf·cm, 47 ft·lbf)
10 mm bolt: 46 N·m (470 kgf·cm, 34 ft·lbf)

(b) Lower the engine left side and remove the transaxle from the engine.

HINT:

At the time of installation, please refer to the following item.
Align the input shaft with the clutch disc and install the transaxle to the engine.

RS02Y-03

REMOVAL

(See page SR-12)

SR0K2-03

REMOVAL

1. w/ Airbag

REMOVE STEERING WHEEL PAD

NOTICE:

If the airbag connector is disconnected with the ignition switch at ON or ACC, DTCs will be recorded.Never use airbag parts from another vehicle. When replacing parts, replace with new parts.

(a) Place the front wheels facing straight ahead.

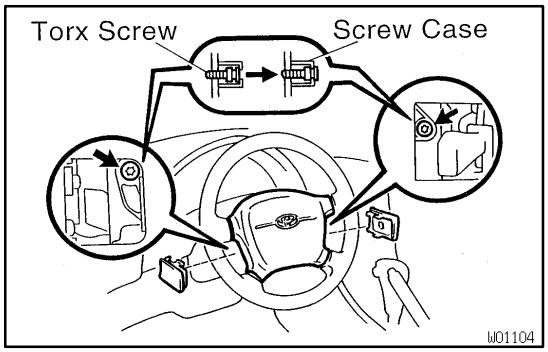

(b) Using a torx socket wrench, loosen the 2 torx screws until the groove along the screw circumference catches on the screw case.

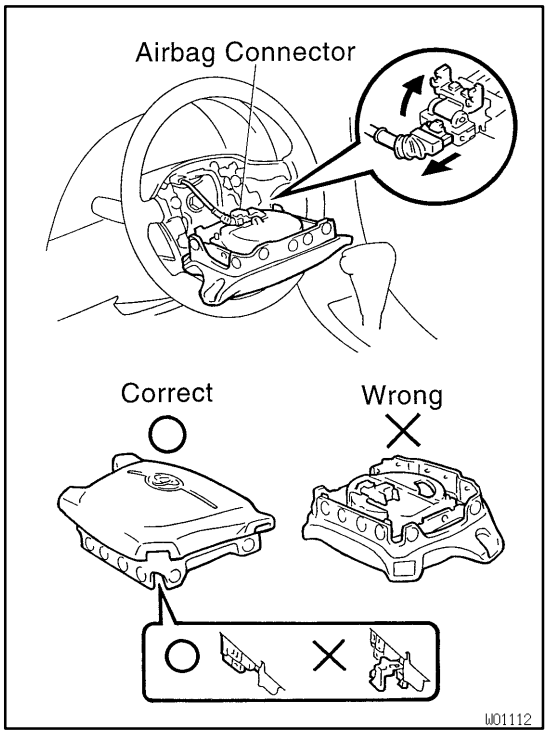

(c) Pull the wheel pad out from the steering wheel and disconnect the airbag connector.

CAUTION:

When storing the wheel pad, keep the upper surface of the pad facing upward.Never disassemble the wheel pad.

NOTICE:

When removing the wheel pad, take care not to pull the airbag wire harness.

2. w/o Airbag

REMOVE STEERING WHEEL PAD

(a) Remove the screw.

(b) Remove the pad.

(c) Disconnect the terminal.

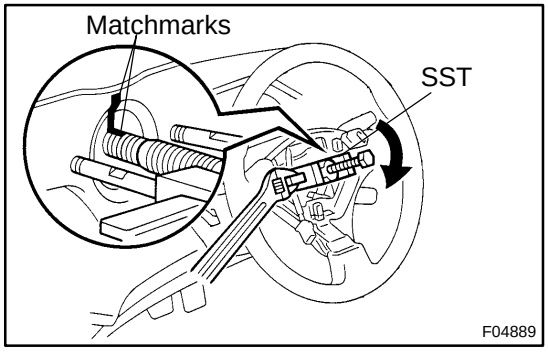

3. REMOVE STEERING WHEEL

(a) Disconnect the connector.

(b) Remove the steering wheel set nut.

(c) Place matchmarks on the steering wheel and main shaft.

(d) Using SST, remove the wheel.

SST 09950-50010 (09951-05010, 09952-05010, 09953-05020, 09954-05020)

4. REMOVE UPPER AND LOWER COLUMN COVERS

Remove the 3 screws.

5. REMOVE COMBINATION SWITCH

(a) Disconnect the connectors.

(b) w/ Airbag:
Disconnect the airbag connector.

(c) Remove the 4 screws.

6. w/ Airbag:
REMOVE SPIRAL CABLE
(See page BE-14)

NOTICE:
Do not disassemble the cable or apply oil to it.

7. REMOVE CLUSTER FINISH LOWER PANEL

8. REMOVE FINISH LOWER NO.1 PANEL

(a) Remove the fuse box opening cover from the panel.

(b) Remove the 2 screws and disconnect the hood lock release lever from the panel.

(c) Remove the 5 panel set screws.

9. REMOVE FINISH PANEL

Remove the 4 bolts.

10. REMOVE NO.2 HEATER TO REGISTER DUCT

Remove the clip.

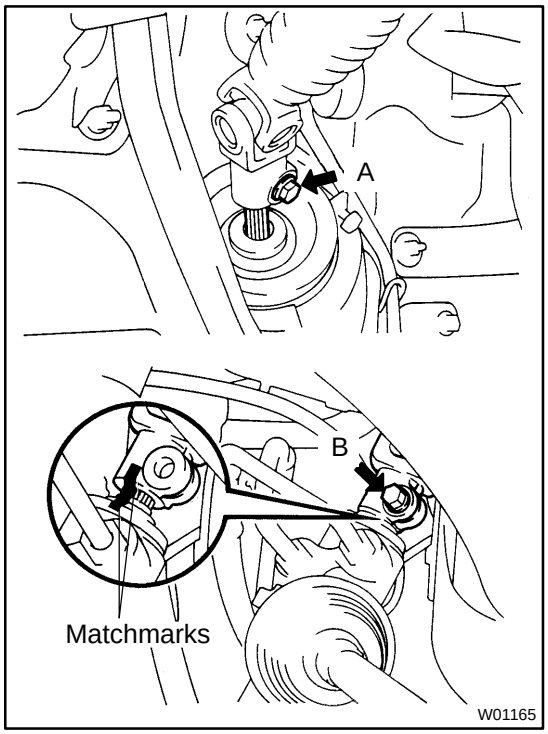

11. DISCONNECT INTERMEDIATE NO.2 SHAFT

(a) Loosen bolt A and remove bolt B.

(b) Place matchmarks on the intermediate No.2 shaft and control valve shaft.

12. REMOVE INTERMEDIATE NO.2 SHAFT

Remove the bolt A.

13. REMOVE STEERING COLUMN ASSEMBLY

(a) Disconnect the connectors.

(b) Remove the 4 column assembly set nuts and bolt.

IG0GN-01

REMOVAL

1. DISCONNECT HIGH-TENSION CORDS FROM DISTRIBUTOR CAP

Disconnect the high-tension cords at the rubber boot. Do not pull on the high-tension cords.

NOTICE:

Pulling on or bending the cords may damage the conductor inside.

2. DISCONNECT DISTRIBUTOR CONNECTOR

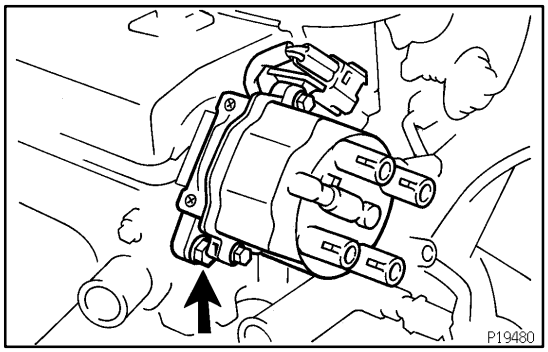

3. REMOVE DISTRIBUTOR

(a) Remove the bolt, and pull out the distributor.

(b) Remove the O-ring from the distributor housing.

SA12I-01

REMOVAL

1. REMOVE FRONT WHEEL

Torque: 103 N·m (1,050 kgf·cm, 76 ft·lbf)

2. w/ ABS:

REMOVE ABS SPEED SENSOR

Remove the ABS speed sensor set bolt and clamp.

Torque: 8.0 N·m (82 kgf·cm, 71 in.·lbf)

3. CHECK BEARING BACKLASH AND AXLE HUB DEVIATION

(a) Remove the 2 bolts, brake caliper and disc.

(b) Support the brake caliper securely.

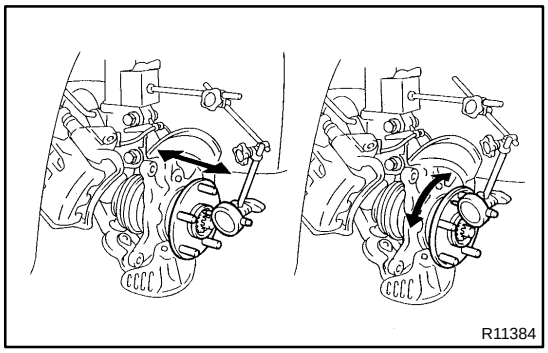

(c) Using a dial indicator, check the backlash near the center of the axle hub.

Maximum: 0.08 mm (0.0031 in.)

If the backlash exceeds the maximum, replace the bearing.

(d) Using a dial indicator, check the deviation at the surface of the axle hub outside the hub bolt.

Maximum: 0.07 mm (0.0028 in.)

If the deviation exceeds the maximum, replace the axle hub.

(e) Install the disc, brake caliper and 2 bolts.

Torque: 103 N·m (1,050 kgf·cm, 76 ft·lbf)

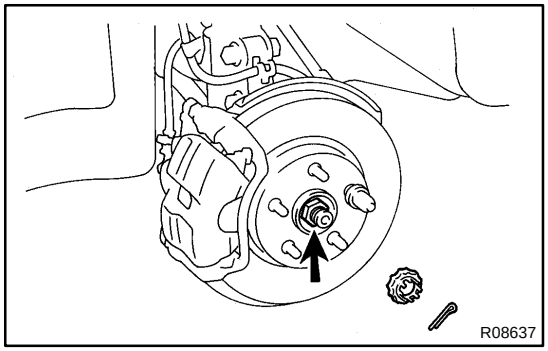

4. REMOVE DRIVE SHAFT LOCK NUT

(a) Remove the cotter pin and lock cap.

(b) While applying the brakes, remove the nut.

Torque: 216 N·m (2,200 kgf·cm, 159 ft·lbf)

(c) Remove the brake caliper and disc.

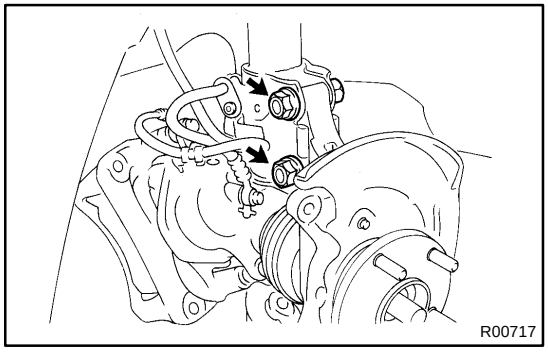

5. LOOSEN 2 NUTS ON LOWER SIDE OF SHOCK ABSORBER

HINT:

Do not remove the bolts.

Torque: 153 N·m (1,560 kgf·cm, 113 ft·lbf)

6. DISCONNECT TIE ROD END FROM STEERING KNUCKLE

(a) Remove the cotter pin and nut.

Torque: 49 N·m (500 kgf·cm, 36 ft·lbf)

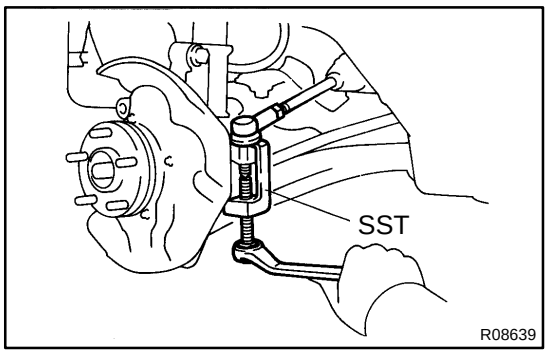

(b) Using SST, disconnect the tie rod end from the steering knuckle.
SST 09610-20012

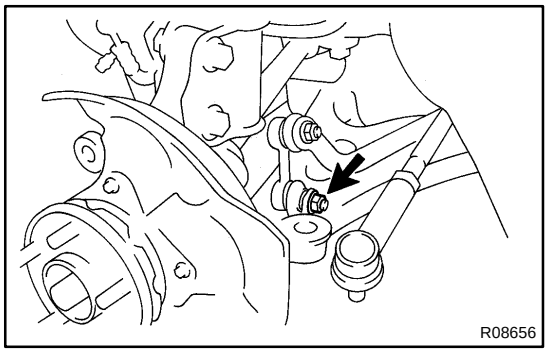

7. DISCONNECT STABILIZER BAR LINK FROM LOWER SUSPENSION ARM

HINT:
If the ball joint turns together with the nut, use a 5 mm hexagon wrench to hold the stud.

Torque: 44 N·m (450 kgf·cm, 33 ft·lbf)

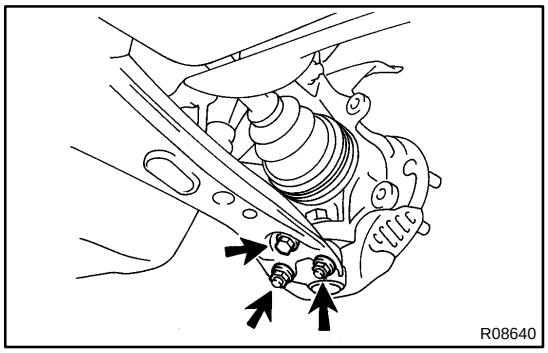

8. DISCONNECT LOWER SUSPENSION ARM FROM LOWER BALL JOINT

Remove the bolt and 2 nuts.

Torque: 127 N·m (1,300 kgf·cm, 94 ft·lbf)

9. REMOVE STEERING KNUCKLE WITH AXLE HUB

(a) Remove the 2 nuts and bolt on the lower side of the shock absorber.

HINT:
At the time of installation, coat the nut's threads with engine oil.

(b) Remove the steering knuckle with axle hub.

CO0G8-02

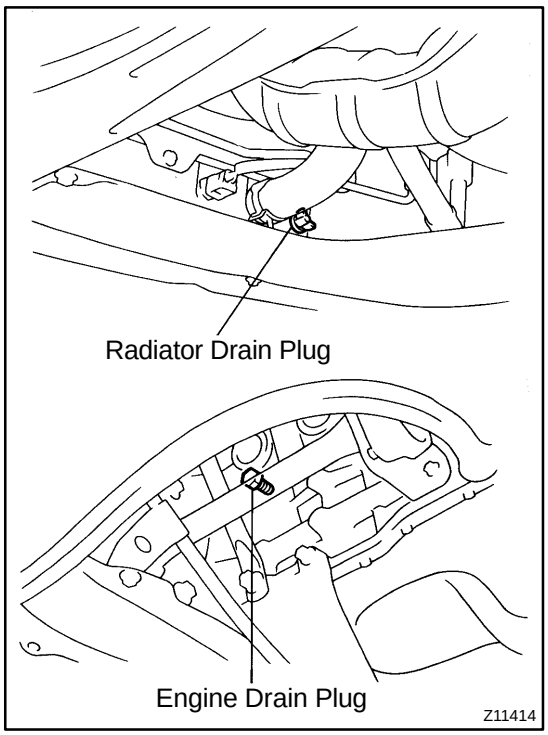

REPLACEMENT

1. REPLACE ENGINE COOLANT

(a) Remove the radiator cap.

CAUTION:

To avoid the danger of being burned, do not remove the radiator cap while the engine and radiator are still hot, as fluid and steam can be blown out under pressure.

(b) Loosen the radiator drain plug (on the right side of the radiator lower tank) and engine drain plug (on the left rear of the cylinder block), and drain the coolant.

(c) Close the drain plugs.

Torque:
Engine drain plug
25 N·m (250 kgf·cm, 18 ft·lbf)

2. REFILL WITH ENGINE COOLANT

(a) Slowly fill the system with coolant.

- Use a good brand of ethylene-glycol base coolant and mix it according to the manufacturer's directions.
- Using coolant which includes more than 50 % ethylene-glycol (but not more than 70 %) is recommended.

NOTICE:

- **Do not use an alcohol type coolant.**
- **The coolant should be mixed with demineralized water or distilled water.**

Capacity (w/ Heater):
M/T
6.7 liters (7.1 US qts, 5.9 Imp. qts)
A/T
7.1 liters (7.5 US qts, 6.2 Imp. qts)

(b) Install the radiator cap.

(c) Start the engine, and bleed the cooling system.

(d) Refill the radiator reservoir with coolant until it reaches the "FULL" line.

3. CHECK ENGINE COOLANT FOR LEAKS

EM0JK-03

REPLACEMENT

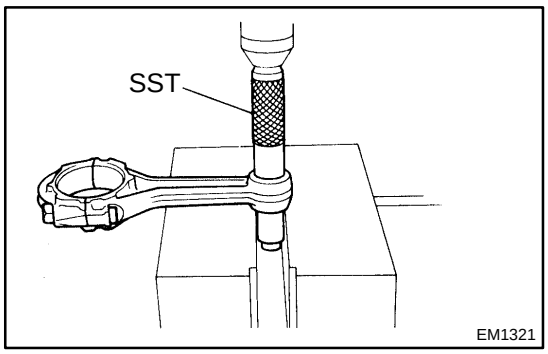

1. REPLACE CONNECTING ROD BUSHING

(a) Using SST and a press, Press out the bushing.
SST 09222-30010

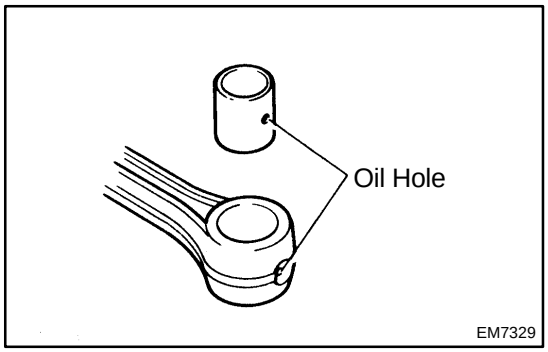

(b) Align the oil holes of a new bushing and the connecting rod.

(c) Using SST and a press, press in the busing.
SST 09222-30010

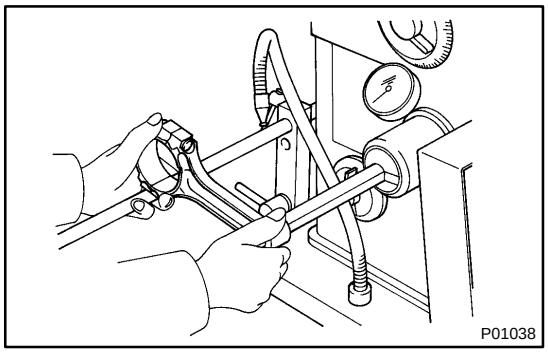

(d) Using a pin hole grinder, hone the bushing to obtain the standard specified clearance (See page EM-99) between the bushing and piston pin.

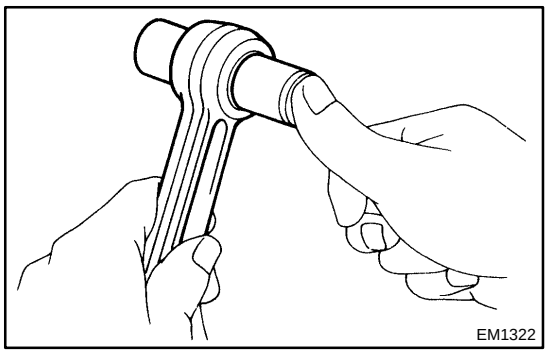

(e) Check the piston pin fit at normal room temperature. Coat the piston pin with engine oil, and push it into the connecting rod with your thumb.

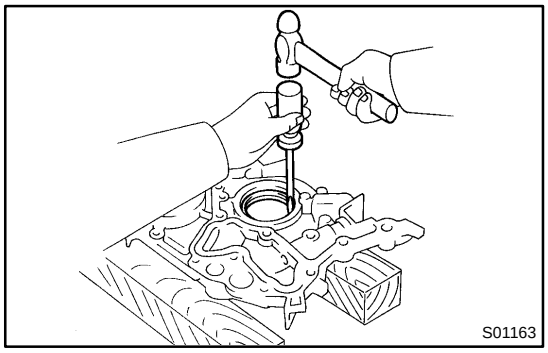

HINT:
There are 2 methods (A and B) to replace the oil seal which are as follows:

2. REPLACE CRANKSHAFT FRONT OIL SEAL

(a) If oil pump is removed from cylinder block:

(1) Using a screwdriver and hammer, tap out the oil seal.

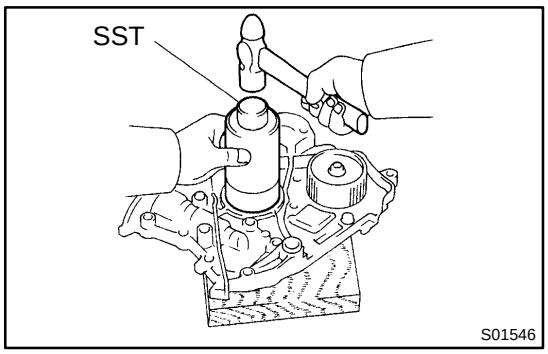

(2) Using SST and a hammer, tap in a new oil seal until its surface is flush with the oil pump body edge.
SST 09226-10010
(3) Apply MP grease to the oil seal lip.

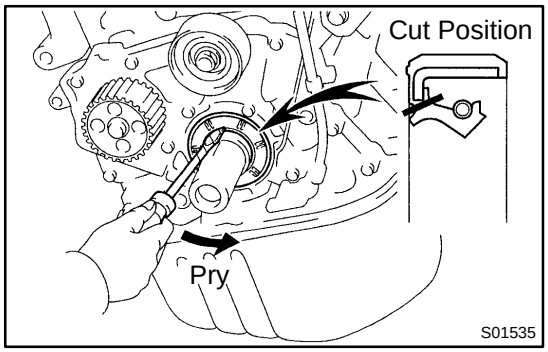

(b) If oil pump is installed to the cylinder block:
(1) Using a knife, cut off the oil seal lip.
(2) Using a screwdriver, pry out the oil seal.

NOTICE:

Be carecul not to damage the crankshaft. Tape the screwdriver tip.

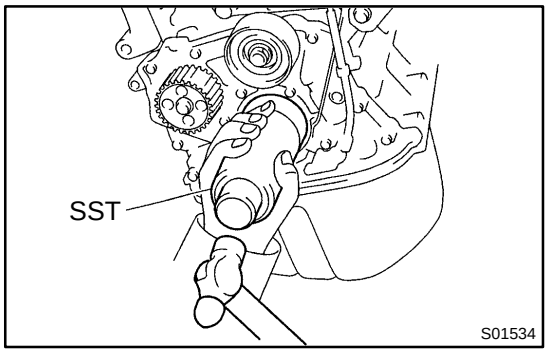

(3) Apply MP grease to a new oil seal lip.
(4) Using SST and a hammer, tap in the oil seal until its surface is flush with the oil pump body edge.
SST 09226-10010

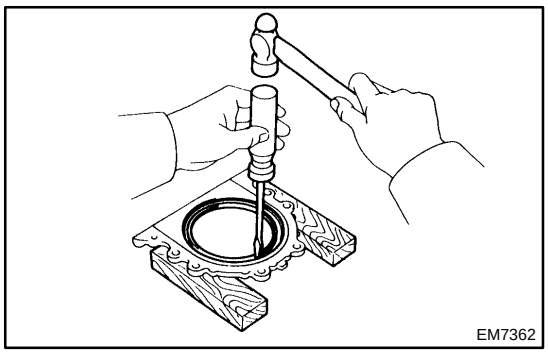

3. REPLACE CRANKSHAFT REAR OIL SEAL

(a) If rear oil seal retainer is removed from cylinder block:
(1) Using a screwdriver and hammer, tap out the oil seal.

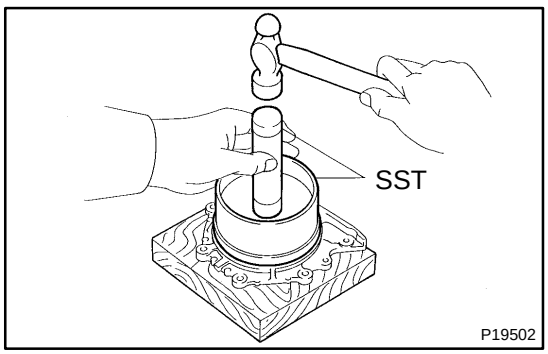

(2) Using SST and a hammer, tap in a new oil seal until its surface is flush with the rear oil seal retainer edge.
SST 09223-15030, 09950-70010 (09951-07100)
(3) Apply MP grease to the oil seal lip.

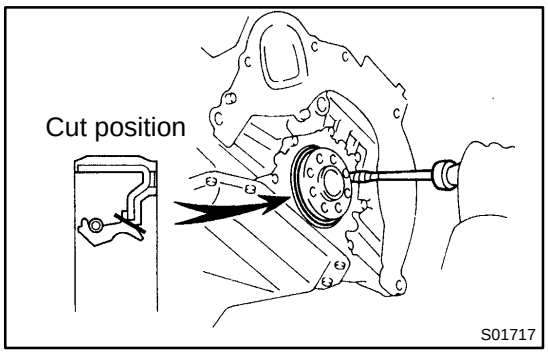

(b) If rear oil seal retainer is installed to cylinder block:
(1) Using a knife, cut off the oil seal lip.
(2) Using a screwdriver, pry out the oil seal.

NOTICE:
be careful not to damage the crankshaft. Tape the screwdriver tip.

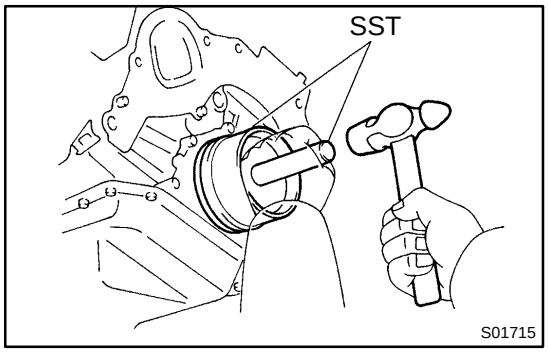

(3) Apply MP grease to a new oil seal lip.
(4) Using SST and a hammer, tap in the oil seal until its surface is flush with the rear oil seal retainer edge.

SST 09223-63010, 09950-70010 (09951-07100)

EM0JC-03

REPLACEMENT

1. REPLACE VALVE GUIDE BUSHINGS

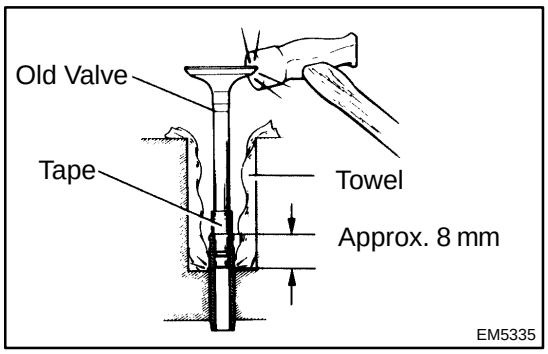

(a) Exhaust (w/ Snap Ring):
Insert an old valve wrapped with tape into the valve guide bushing, and break off the valve guide bushing by hitting it with a hammer. Remove the snap ring.

HINT:
Wrap the tape approx. 8 mm (0.31 in.) from the valve stem end.

NOTICE:
Be careful not to damage the valve lifter hole.

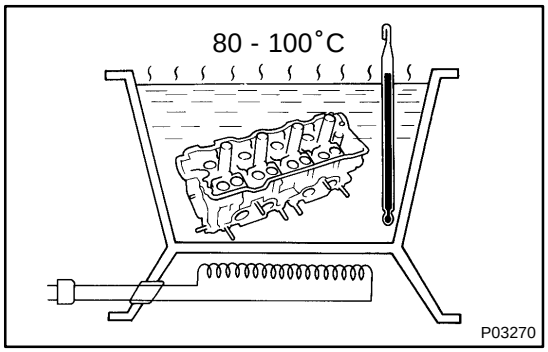

(b) Gradually heat the cylinder head to 80 - 100 ˚C (176 - 212 ˚F).

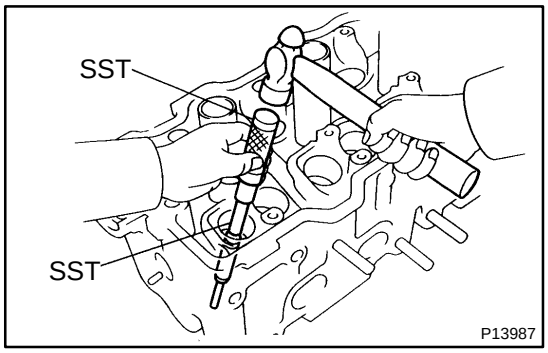

(c) Using SST and a hammer, tap out the guide bushing.
SST 09201-10000 (09201-01060),
09950-70010 (09951-07100)

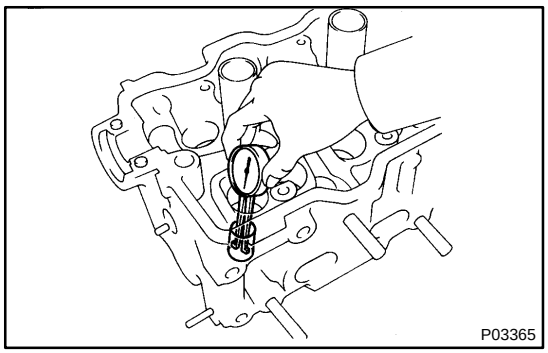

(d) Using a caliper gauge, measure the bushing bore diameter of the cylinder head.

Both intake and exhaust

Bushing bore diameter mm (in.)	Bushing size
10.985 – 11.012 (0.4325 – 0.4335)	Use STD
11.035 – 11.062 (0.4344 – 0.4355)	Use O/S 0.05

V05053

(e) Select a new guide bushing (STD or O/S 0.05).

If the bushing bore diameter of the cylinder head is greater than 11.012 mm (0.4335 in.), machine the bushing bore to the following dimension:

11.035 - 11.062 mm (0.4344 - 0.4355 in.)

If the bushing bore diameter of the cylinder head is greater than 11.062 mm (0.4355 in.), replace the cylinder head.

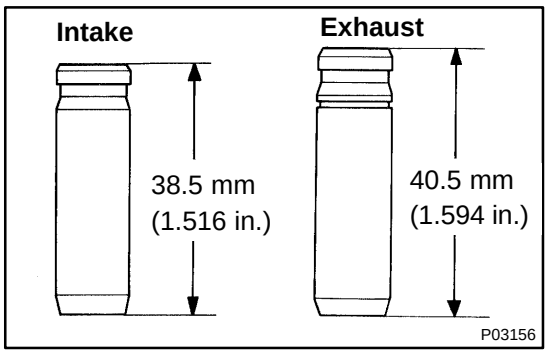

HINT:
Different the bushings are used for the intake and exhaust.

(f) Gradually heat the cylinder heat to 80 - 100 °C (176 - 212 °F).

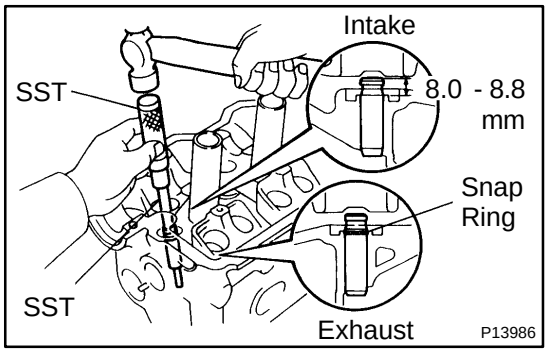

(g) Intake:
Using SST and a hammer, tap in a new guide bushing until there is 8.0 - 8.8 mm (0.315 - 0.346 in.) protruding from the cylinder head.
SST 09201-10000 (09201-01060), 09950-70010 (09951-07100)

(h) Exhaust:
Using SST and a hammer, tap in a new guide bushing until the snap ring makes contact with the cylinder head.
SST 09201- 10000 (09201- 01060), 09950- 70010 (09951-07100)

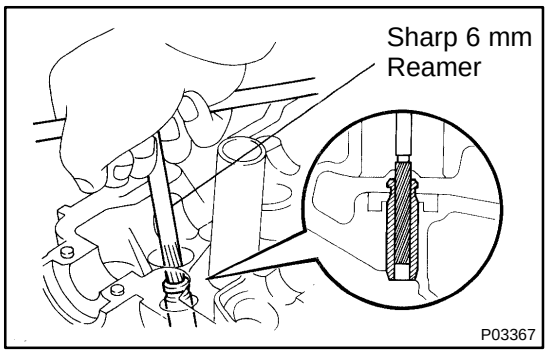

(i) Using a sharp 6.0 mm (0.236 in.) reamer, ream the guide bushing to obtain the standard specified clearance (See page EM-41) between the guide bushing and valve stem.

LU07X-03

REPLACEMENT

CAUTION:

- **Prolonged and repeated contact with mineral oil will result in the removal of natural fats from the skin, leading to dryness, irritation and dermatitis. In addition, used engine oil contains potentially harmful contaminants which may cause skin cancer.**
- **Care should be taken, therefore, when changing engine oil to minimize the frequency and length of time your skin is exposed to used engine oil. Protective clothing and gloves that cannot be penetrated by oil should be worn. The skin should be thoroughly washed with soap and water, or use water-less hand cleaner, to remove any used engine oil. Do not use gasoline, thinners, or solvents.**
- **In order to preserve the environment, used oil and used oil filters must be disposed of only at designated disposal sites.**

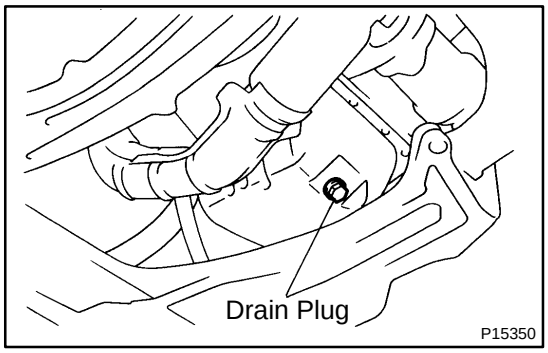

1. DRAIN ENGINE OIL

(a) Remove the oil filler cap.

(b) Remove the oil drain plug, and drain the oil into a container.

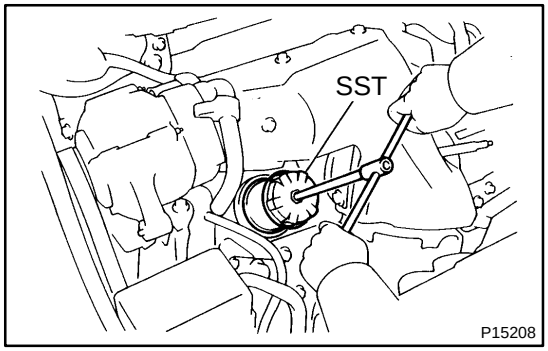

2. REPLACE OIL FILTER

(a) Using SST, remove the oil filter.
SST 09228-06501

(b) Clean the oil filter contact surface on the oil filter mounting.

(c) Lubricate the filter rubber gasket with clean engine oil.

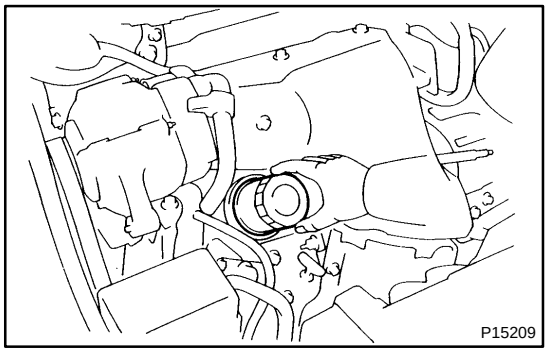

(d) Tighten the oil filter by hand until the rubber gasket contacts the seat of the filter mounting.

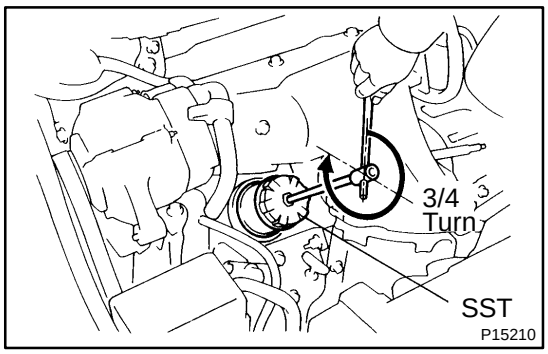

(e) Using SST, give it an additional 3/4 turn to seat the filter.
SST 9228-06501

3. FILL WITH ENGINE OIL

(a) Clean and install the oil drain plug with a new gasket.
Torque: 39 N·m (400 kgf·cm, 29 ft·lbf)

(b) Fill with new engine oil.
Capacity:

Drain and refill	w/ Oil filter change	3.9 liters (4.1 US qts, 3.4 lmp. qts)
	w/o Oil filter change	3.7 liters (3.9 US qts, 3.3 lmp. qts)
Dry fill	w/ Oil cooler	4.3 liters (4.5 US qts, 3.8 lmp. qts)

(c) Reinstall the oil filler cap.

4. START ENGINE AND CHECK FOR OIL LEAKS

5. RECHECK ENGINE OIL LEVEL

LU082-02

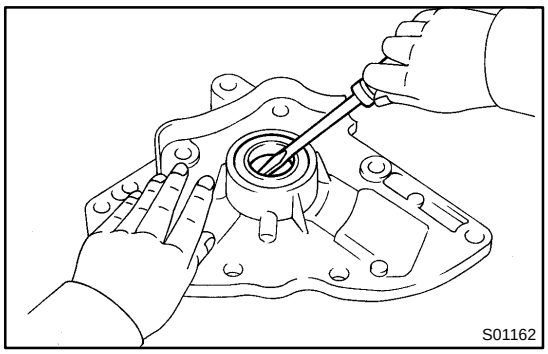

REPLACEMENT

1. REMOVE OIL SEAL

Using a screwdriver, pry out the oil seal.

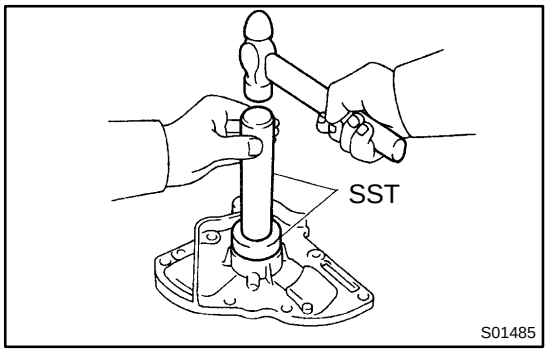

2. INSTALL OIL SEAL

(a) Using SST and a hammer, tap in a new oil seal until its surface is flush with the oil pump cover edge.

SST 09950-60010 (09951-00350),
09950-70010 (09951-07100)

(b) Apply MP grease to the oil seal lip.

3. REPLACE CRANKSHAFT FRONT OIL SEAL
(See page EM-106)

ST07T-03

REPLACEMENT

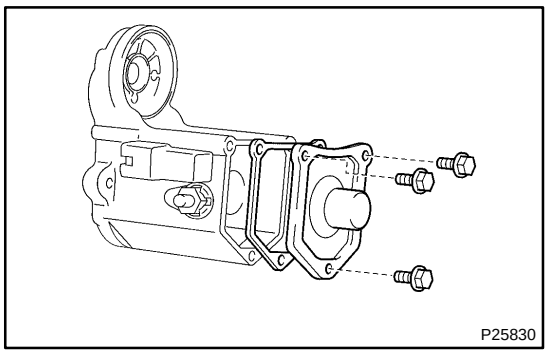

1. REMOVE MAGNETIC SWITCH END COVER

Remove the 3 bolts, end cover, gasket and plunger.

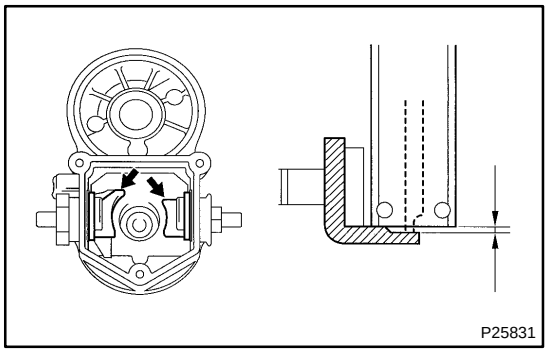

2. INSPECT CONTACT PLATE FOR WEAR

Using vernier calipers, measure the contact plate for depth of wear.

Maximum wear:
0.9 mm (0.035 in.)

If the depth of wear is greater than the maximum, replace the contact plate.

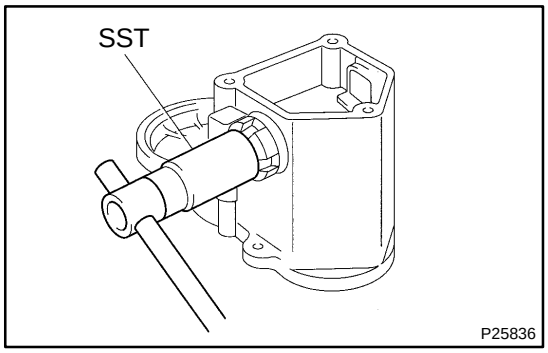

3. REMOVE TERMINAL KIT PARTS

(a) Using SST, loosen the terminal nuts.
SST 09810-38140

(b) Terminal C:
Remove the terminal nut, wave washer, terminal insulator (outside), O-ring, terminal bolt, contact plate and terminal insulator (inside).

(c) Terminal 30:
Remove the terminal nut, wave washer, terminal insulator (outside), packing, O-ring, terminal bolt, contact plate, terminal insulator (inside) and insulation paper.

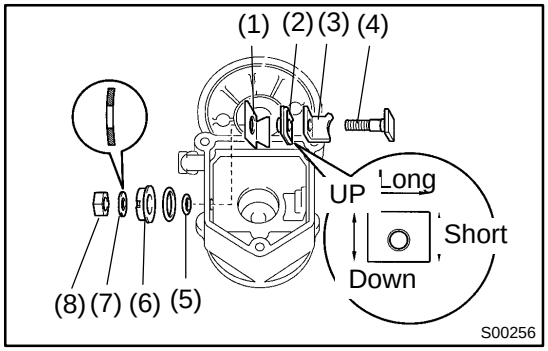

4. REINSTALL TERMINAL KIT PARTS

(a) Install these new parts (Terminal 30):
(1) Insulation paper
(2) Terminal insulator (inside)
(3) Contact plate
(4) Terminal bolt
(5) O-ring
(6) Packing and terminal insulator (outside)
Install the packing to the terminal insulator, and install them.

HINT:
Match the protrusion of the insulator with the indentation of the housing.

(7) Wave washer
(8) Terminal nut

NOTICE:
Be careful to install the terminal insulators (inside) and wave washers in the correct direction.

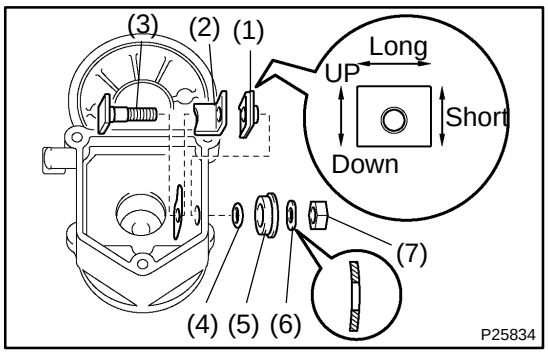

(b) Terminal C:
Install these new parts :
(1) Terminal insulator (inside)
(2) Contact plate
(3) Terminal bolt
(4) O-ring
(5) Terminal insulator (outside)
(6) Wave washer
(7) Terminal nut

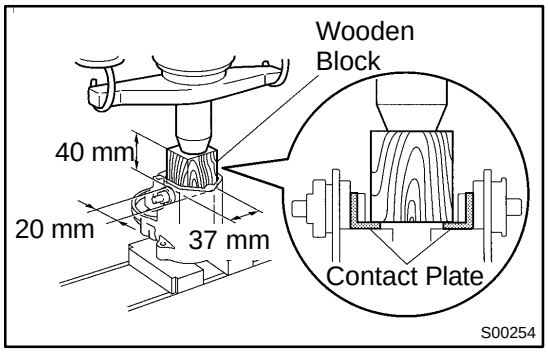

NOTICE:
Be careful to install the terminal insulators (inside) and wave washers in the correct direction.

(c) Temporarily tighten the terminal nuts.

5. TIGHTEN TERMINAL NUT

(a) Put a wooden block on the contact plate and press it down with a hand press.
Dimensions of wooden block:
20 x 37 x 40 mm (0.79 x 1.46 x 1.57 in.)
Press force:
981 N (100 kgf, 221 lbf)

NOTICE:

- **Check the diameter of the hand press ram. Then calculate the gauge pressure of the press when 981 N (100 kgf, 221 lbf) of force is applied.**
Gauge pressure:

$$(\text{kgf/cm}^2) = \frac{100\ \text{kgf}}{\left(\frac{\text{Ram diameter (cm)}}{2}\right)^2 \times 3.14\ (\pi)}$$

$$(\text{psi}) = \frac{221\ \text{lbf}}{\left(\frac{\text{Ram diameter (in.)}}{2}\right)^2 \times 3.14\ (\pi)}$$

$$(\text{kPa}) = (\text{kgf/cm}^2) \times 98.1$$

$$(\text{kPa}) = (\text{psi}) \times 6.9$$

V06796

- **If the contact plate is not pressed down with the specified pressure, the contact plate may tilt due to coil deformation or the tightening of the nut.**

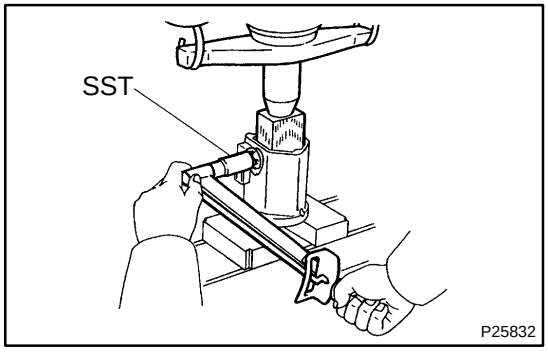

(b) Using SST, tighten the nuts to the specified torque.
SST 09810-38140
Torque: 17 N·m (170 kgf·cm, 12 ft·lbf)

NOTICE:
If the nut is over tightened, it may cause cracks on the inside of the insulator.

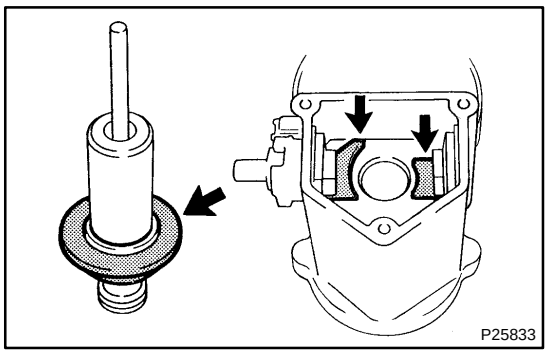

6. CLEAN CONTACT SURFACES OF CONTACT PLATE AND PLUNGER

Clean the contact surfaces of the remaining contact plate and plunger with a dry shop rag.

7. REINSTALL MAGNETIC SWITCH END COVER

Install the plunger, new gasket and end cover with the 3 bolts.

Torque: 2.5 N·m (26 kgf·cm, 23 in.·lbf)

CO0Z4-01

REPLACEMENT

1. REPLACE ENGINE COOLANT

(a) Remove the radiator cap.

CAUTION:

To avoid the danger of being burned, do not remove the radiator cap while the engine and radiator are still hot, as fluid and steam can be blown out under pressure.

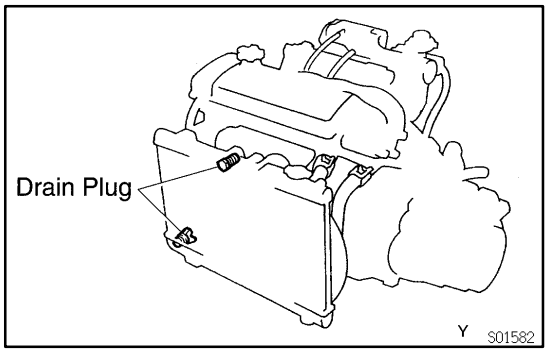

(b) Loosen the drain cock (for the radiator) and drain plug (for the engine), and drain the coolant.

(c) Close the drain plug and cock.

Torque:

Engine drain plug

29 N·m (300 kgf·cm, 22 ft·lbf)

2. REFILL WITH ENGINE COOLANT

(a) Slowly fill the system with coolant.

- Use a good brand of ethylene-glycol base coolant and mix it according to the manufacturer's directions.
- Using coolant which includes more than 50 % ethylene-glycol (but not more than 70 %) is recommended.

NOTICE:

Do not use an alcohol type coolant.The coolant should be mixed with demineralized water or distilled water.

Capacity:

M/T

6.1 liters (6.4 US qts, 5.4 lmp. qts)

A/T

6.6 liters (7.0 US qts, 5.8 lmp. qts)

(b) Install the radiator cap.

(c) Start the engine, and bleed the cooling system.

(d) Refill the reservoir with coolant until it reaches the "FULL" line.

3. CHECK ENGINE COOLANT FOR LEAKS

EM1CE-02

REPLACEMENT

1. OVERSIZED (O/S) PISTONS FOR CYLINDER BORING

HINT:

- Bore all the 4 cylinders for the oversized piston outside diameter.
- Replace all the piston rings with ones to match the oversized pistons.

(a) Keep oversized pistons.

Oversized piston diameter:

O/S 0.50

81.405 - 81.435 mm (3.2049 - 3.2061 in.)

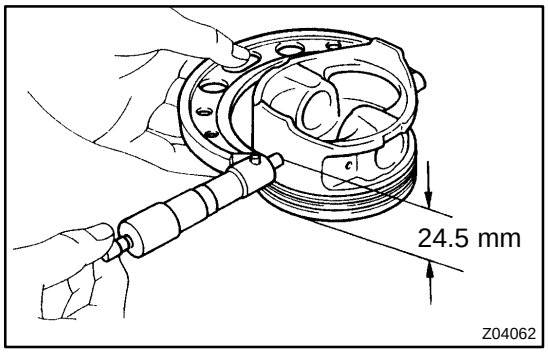

(b) Calculate amount to the bore cylinders.

(c) Using a micrometer, measure the piston diameter at right angles to the piston pin center line, 24.5 mm (0.965 in.) from the piston head.

(d) Calculate the amount of each cylinder is to be rebored as follows:

Size to be rebored = P + C - H

P = Piston diameter

C = Piston clearance

0.085 - 0.105 mm (0.0031 - 0.0041 in.)

H = Allowance for honing

0.02 mm (0.0008 in.) or less

(e) Bore and hone cylinder to the calculated dimensions.

Maximum honing:

0.02 mm (0.0008 in.)

NOTICE:

Excess honing will destroy the finished roundness.

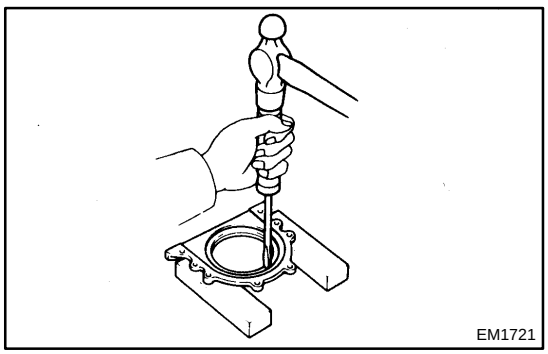

2. REPLACE CRANKSHAFT OIL SEAL

HINT:

There are 2 methods (A and B) to replace the oil seal which are as follows:

(a) Replace the crankshaft front oil seal.
(See page LU-2)

(b) Replace the crankshaft rear oil seal.

If rear oil seal retainer is removed from cylinder block.

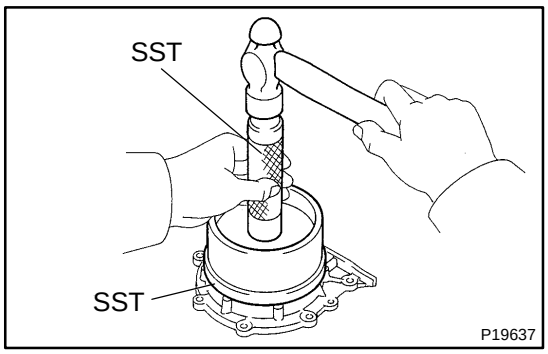

(1) Using a screwdriver and hammer, tap out the oil seal.
(2) Using SST and a hammer, tap in a new oil seal until its surface is flush with the rear oil seal retainer edge.

SST 09223-15030,09950-10012(09552-10012)

(3) Apply MP grease to the oil seal lip.

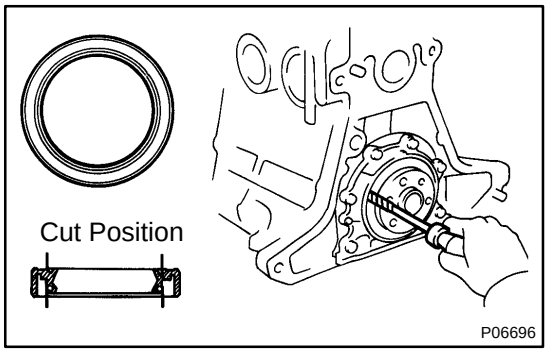

(c) If rear oil seal retainer is installed to cylinder block.
(1) Using a knife, cut off the oil seal lip.
(2) Using a screwdriver, pry out the oil seal.

NOTICE:

Be careful not to damage the crankshaft. Tape the screwdriver tip.

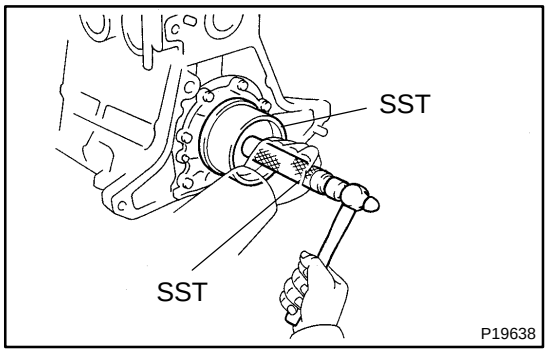

(3) Apply MP grease to a new oil seal lip.
(4) Using SST and a hammer, tap in the oil seal until its surface is flush with the rear oil seal retainer edge.

SST 09223-15030,09950-10012(09552-10012)

EM1C5-02

REPLACEMENT

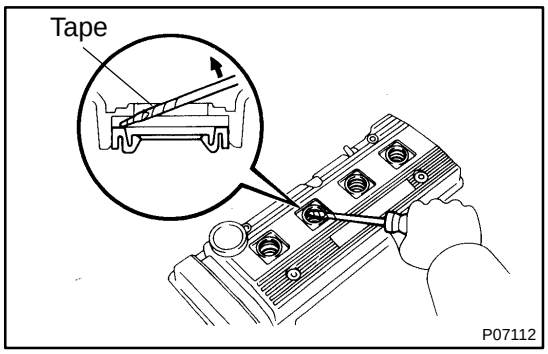

1. REPLACE SPARK PLUG TUBE GASKETS

(a) Using a screwdriver, pry out the tube gasket.

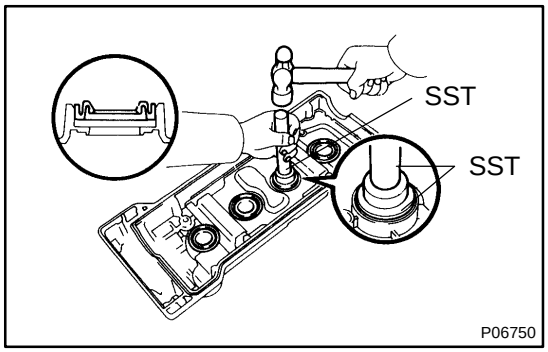

(b) Using SST and a hammer, tap in new tube gasket until its surface is flush with the upper edge of the cylinder head cover.
SST 09550-10012 (09552-10010, 09556-10010)

(c) Apply a light coat of MP grease to the gasket lip.

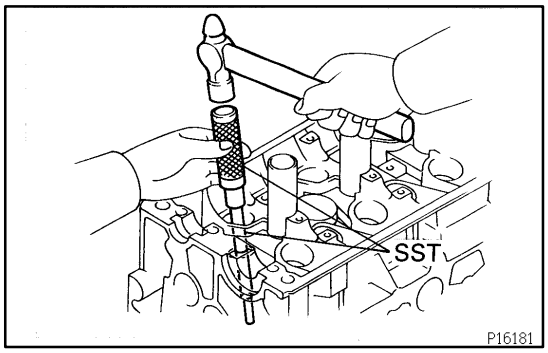

2. REPLACE VALVE GUIDE BUSHINGS

(a) Gradually heat the cylinder head to 80 - 100°C (176 - 212°F).

(b) Using SST and a hammer, tap out the guide bushing.
SST 09201-10000 (09201-01060),
09608-30022 (09608-05010)

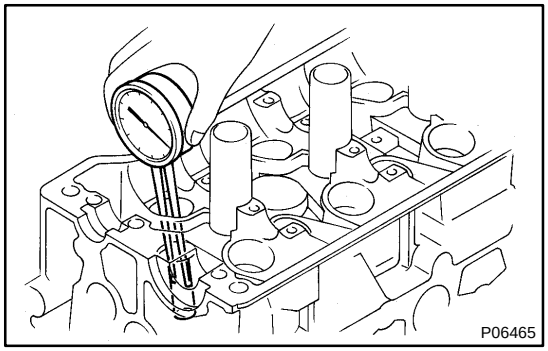

(c) Using a caliper gauge, measure the bushing bore diameter of the cylinder head.

Both intake and exhaust

Bushing bore diameter mm (in.)	Bushing size
11.000 - 11.027 (0.4331 - 0.4341)	Use STD
11.050 - 11.077 (0.4350 - 0.4361)	Use O/S 0.05

(d) Select a new guide bushing (STD or O/S 0.05).

If the bushing bore diameter of the cylinder head is greater than 11.027 mm (0.4341 in.), machine the bushing bore to the following dimension:

Reboried cylinder head bushing bore dimension:
11.050 - 11.077 mm (0.4350 - 0.4361 in.)

If the bushing bore diameter of the cylinder head is greater than 11.077 mm (0.4361 in.), replace the cylinder head.

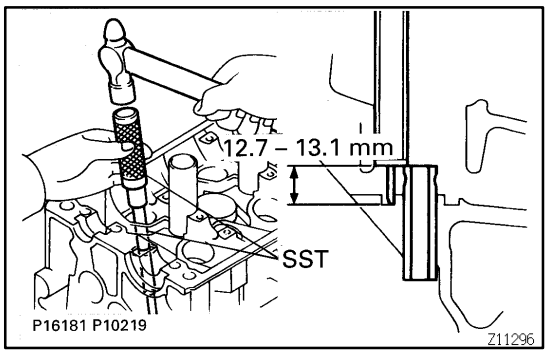

(e) Gradually heat the cylinder head to 80 - 100˚C (176 - 212˚F).

(f) Using SST and a hammer, tap in a new guide bushing until there is 12.7 - 13.1 mm (0.500 - 0.516 in.) protruding from the cylinder head.

SST 09201-10000 (09201-01060),
09608-30022 (09608-05010)

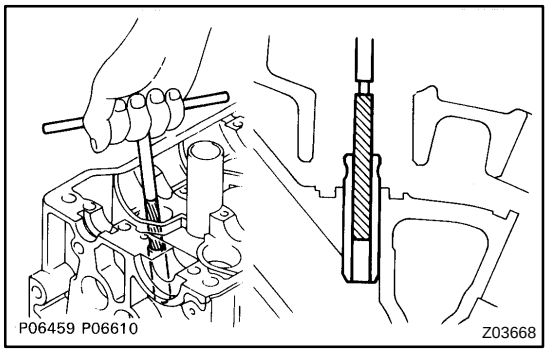

(g) Using a sharp 6 mm reamer, ream the guide bushing to obtain the standard specified clearance (See step x in cylinder head components inspection and repair) between the guide bushing and valve stem.

LU0JU-01

REPLACEMENT

CAUTION:

Prolonged and repeated contact with mineral oil will result in the removal of natural fats from the skin, leading to dryness, irritation and dermatitis. In addition, used engine oil contains potentially harmful contaminants which may cause skin cancer.Care should be taken, therefore, when changing engine oil to minimize the frequency and length of time your skin is exposed to used engine oil. Protective clothing and gloves that cannot be penetrated by oil should be worn. The skin should be thoroughly washed with soap and water, or use water-less hand cleaner, to remove any used engine oil. Do not use gasoline, thinners, or solvents.In order to preserve the environment, used oil and used oil filter must be disposed of only at designated disposal sites.

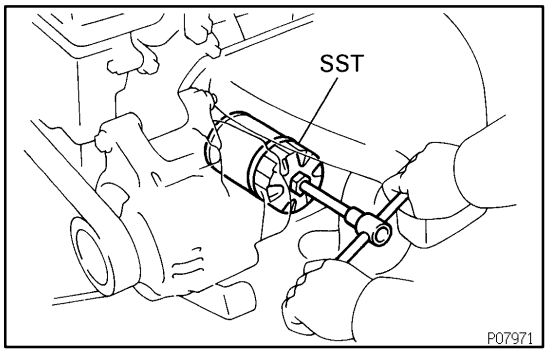

1. DRAIN ENGINE OIL

(a) Remove the oil filler cap.

(b) Remove the oil drain plug, and drain the oil into a container.

2. REPLACE OIL FILTER

(a) Using SST, remove the oil filter.
SST 09228-06501

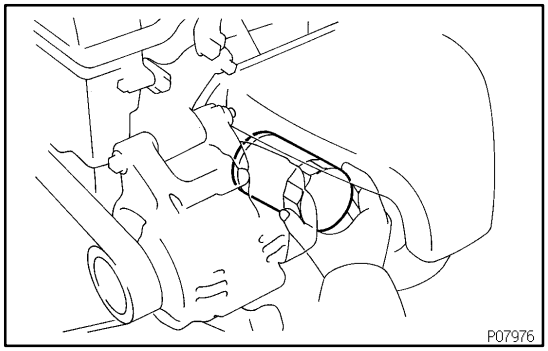

(b) Clean the oil filter contact surface on the oil filter mounting.

(c) Lubricate the filter rubber gasket with clean engine oil.

(d) Tighten the oil filter by hand until the rubber gasket contacts the seat of the filter mounting.

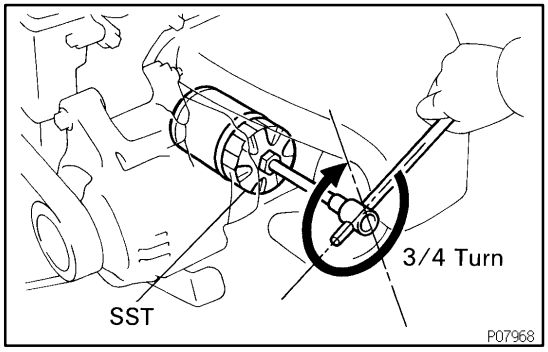

(e) Using SST, give it an additional 3/4 turn to seat the filter.
SST 09228-06501

3. FILL WITH ENGINE OIL

(a) Clean and install the oil drain plug with a new gasket.
Torque: 44 N·m (450 kgf·cm, 32 ft·lbf)

(b) Fill with new engine oil.
Oil capacity:
Drain and refill
w/ Oil filter change
3.7 liters (3.9 US qts, 3.3 Imp. qts)

w/o Oil filter change

3.5 liters (3.7 US qts, 3.1 lmp. qts)

Dry fill

4.3 liters (4.5 US qts, 3.8 lmp. qts)

(c) Reinstall the oil filler cap.

4. START ENGINE AND CHECK FOR OIL LEAKS

5. RECHECK ENGINE OIL LEVEL

LU0JQ-01

REPLACEMENT

REPLACE CRANKSHAFT FRONT OIL SEAL (See page EM-83)

ST0JZ-02

REPLACEMENT

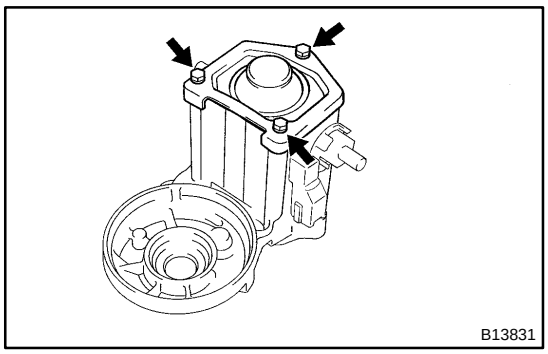

1. REMOVE MAGNETIC SWITCH END COVER

Remove the 3 bolts, end cover, gasket and plunger.

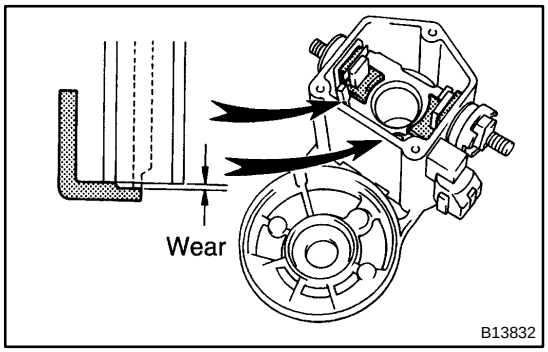

2. INSPECT CONTACT PLATE FOR WEAR

Using vernier calipers, measure the contact plate for depth of wear.

Maximum wear:
0.9 mm (0.035 in.)

If the depth of wear is greater than the maximum, replace the contact plate.

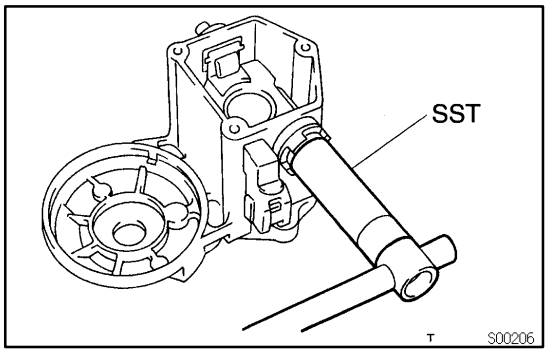

3. REMOVE TERMINAL KIT PARTS

(a) Using SST, loosen the terminal nuts.
SST 09810-38140

(b) Terminal C:
Remove the terminal nut, wave washer, terminal insulator (outside), O-ring, terminal bolt, contact plate and terminal insulator (inside).

(c) Terminal 30:
Remove the terminal nut, wave washer, terminal insulator (outside), packing, O-ring, terminal bolt, contact plate, terminal insulator (inside) and insulation paper.

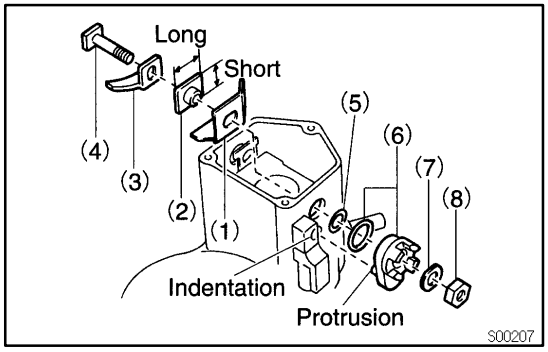

4. REINSTALL TERMINAL KIT PARTS

(a) Install these new parts (Terminal 30):
(1) Insulation paper
(2) Terminal insulator (inside)

NOTICE:

Be careful to install the terminal insulator in the correct direction.

(3) Contact plate
(4) Terminal bolt
(5) O-ring

(6) Packing and terminal insulator (outside)
Install the packing to the terminal insulator, and install them.

HINT:
Match the protrusion of the insulator with the indentation of the housing.

(7) Wave washer
(8) Terminal nut

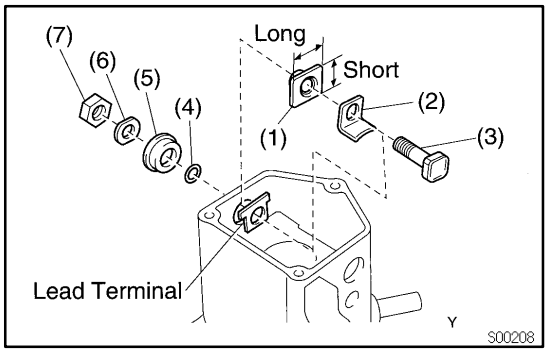

(b) Install these new parts (Terminal C):
(1) Terminal insulator (inside)
(2) Contact plate
(3) Terminal bolt
(4) O-ring
(5) Terminal insulator (outside)
(6) Wave washer
(7) Terminal nut

NOTICE:
Be careful to install the terminal insulator (inside) in the correct direction.

(c) Temporarily tighten the terminal nuts.

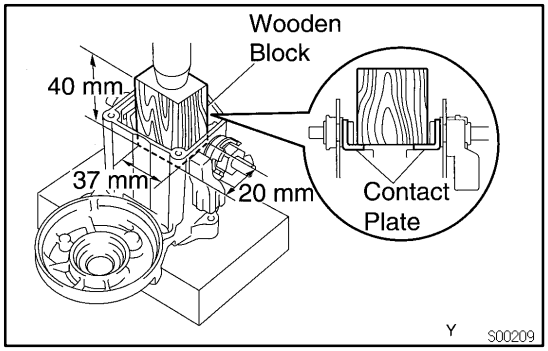

5. TIGHTEN TERMINAL NUT

(a) Put a wooden block on the contact plate and press it down with a hand press.
Dimensions of wooden block:
20 x 37 x 40 mm (0.79 x 1.46 x 1.57 in.)
Press force:
981 N (100 kgf, 221 lbf)

NOTICE:

- **Check the diameter of the hand press ram. Then calculate the gauge pressure of the press when 981 N (100 kgf, 221 lbf) of force is applied.**
Gauge pressure:

$$(\text{kgf/cm}^2) = \frac{100\ \text{kgf}}{\left(\frac{\text{Ram diameter (cm)}}{2}\right)^2 \times 3.14\ (\pi)}$$

$$(\text{psi}) = \frac{221\ \text{lbf}}{\left(\frac{\text{Ram diameter (in.)}}{2}\right)^2 \times 3.14\ (\pi)}$$

$$(\text{kPa}) = (\text{kgf/cm}^2) \times 98.1$$

$$(\text{kPa}) = (\text{psi}) \times 6.9$$

- **If the contact plate is not pressed down with the specified pressure, the contact plate may tilt due to coil deformation or the tightening of the nut.**

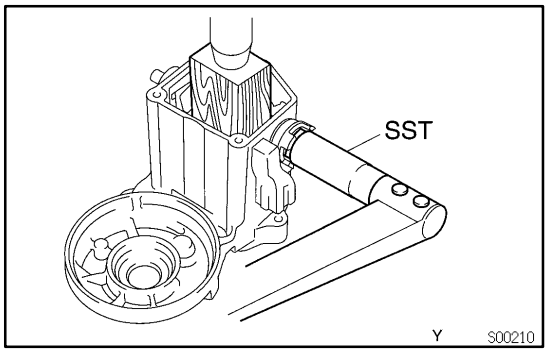

(b) Using SST, tighten the nuts to the specified torque.
SST 09810-38140
Torque: 17 N·m (173 kgf·cm, 12 ft·lbf)

NOTICE:
If the nut is over tightened, it may cause cracks on the inside of the insulator.

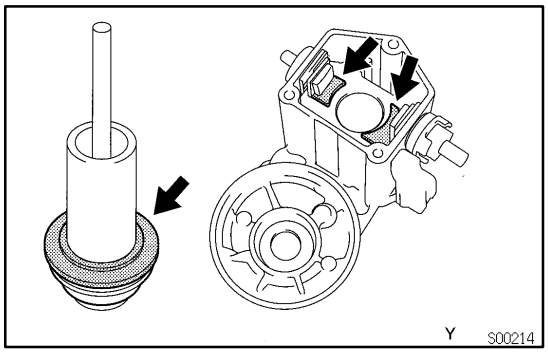

6. CLEAN CONTACT SURFACES OF CONTACT PLATE AND PLUNGER

Clean the contact surfaces of the remaining contact plate and plunger with a dry shop rag.

7. REINSTALL MAGNETIC SWITCH END COVER

Install the plunger, new gasket and end cover with the 3 bolts.
Torque: 2.5 N·m (26 kgf·cm, 23 in.·lbf)

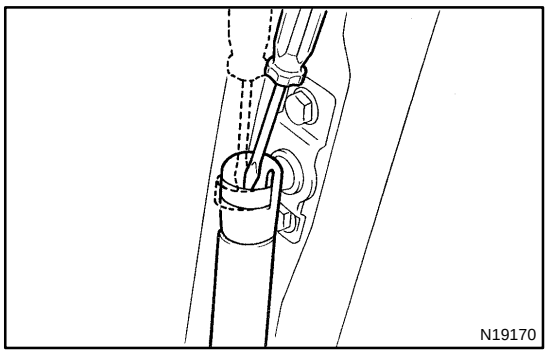

BACK DOOR STAY

BO1DS-03

REPLACEMENT

1. REMOVE BACK DOOR STAY

(a) Using a screwdriver, remove the clip, then remove the back door stay from the upper bracket.

HINT:

Tape the screwdriver tip before use.

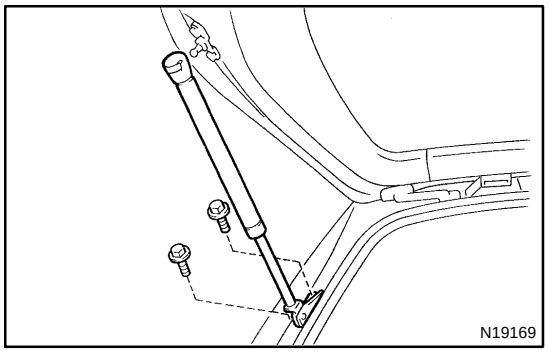

(b) Remove the 2 bolts and back door stay.

NOTICE:

- **Do not disassemble the back door stay because the cylinder is fulled with pressurized gas.**

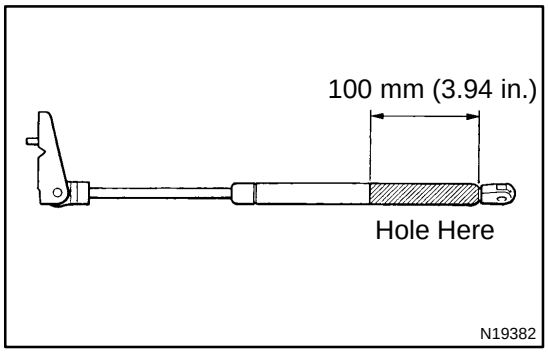

- **If the back door stay is to be replaced, drill a 2.0 - 3.0 mm (0.079 - 0.118 in.) hole in the area shown in the illustration tot completely release the high-pressure gas before disposing of it.**
- **When drilling, chips may fly out so work carefully.**
- **The gas is colorless, odorless and non-toxic.**
- **When working, handle the back door stay carefully. Never score or scratch the exposed part of the piston rod, and never allow paint or oil to get on it.**
- **Do not turn the piston rod and cylinder with the back door stay fully extended.**

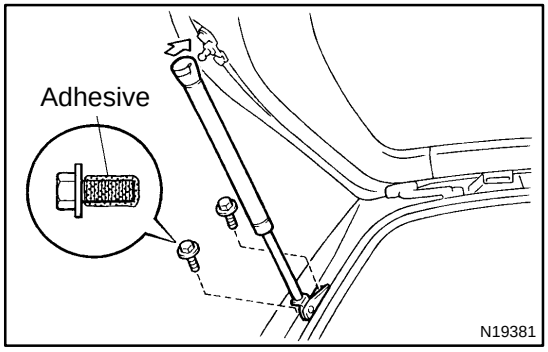

2. INSTALL BACK DOOR STAY

(a) Install the back door stay with the clip to the upper bracket.

(b) Install the back door stay with the 2 bolts.

HINT:

Apply adhesive to the bolts before tightening.

Part No. 08833-00070, THREE BOND 1324 or equivalent.

Torque: 8.8 N·m (90 kgf·cm, 78 in.·lbf)

CLIP

BO0ZO-11

REPLACEMENT

The removal and installation methods of typical clips used in body parts are shown in the table below.
HINT:
If the clip is damaged during the operation, always replace it with a new clip.

Shape (Example)	Removal/Installation
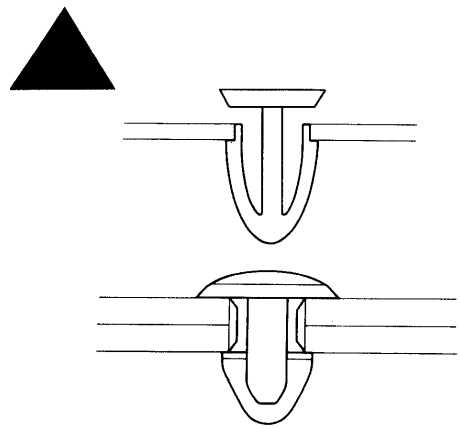	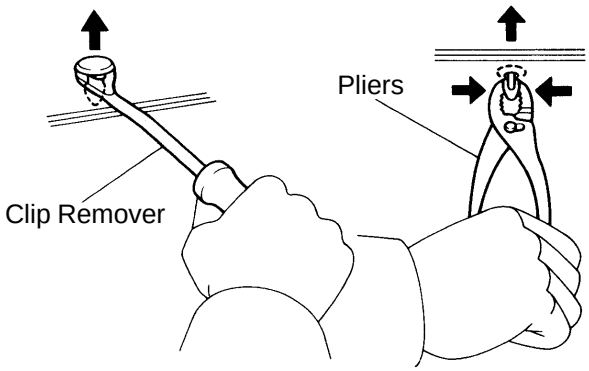
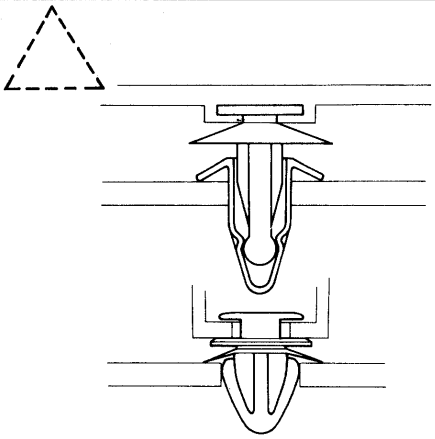	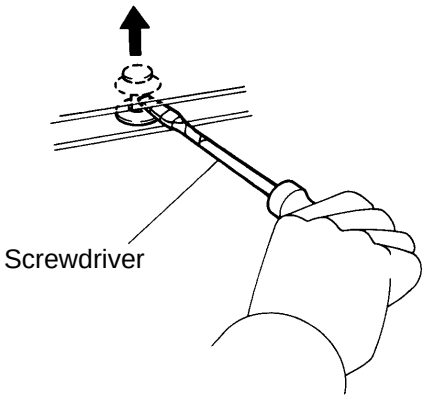
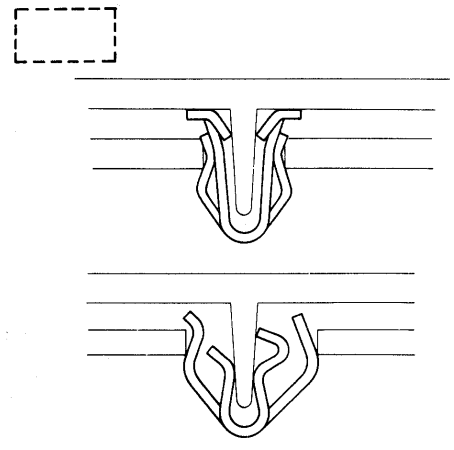	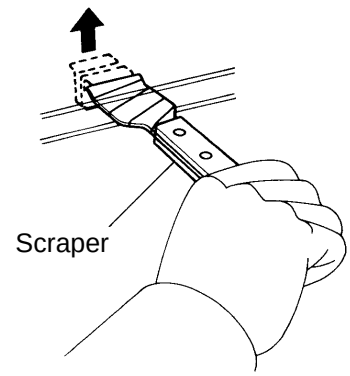

V00005

Shape (Example)	Removal/Installation
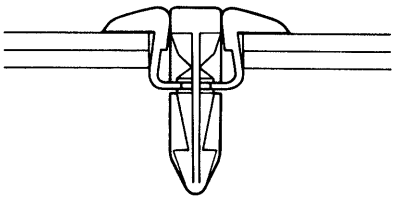	Removal Installation 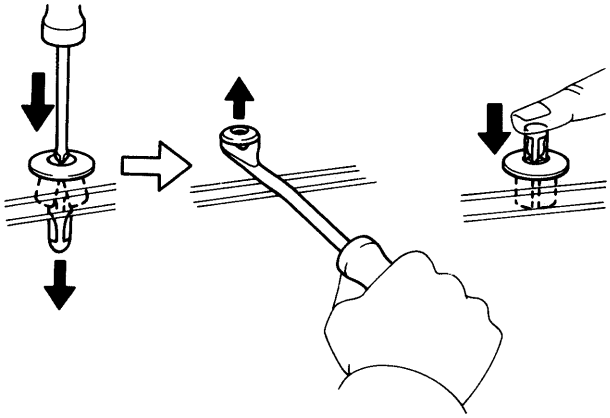
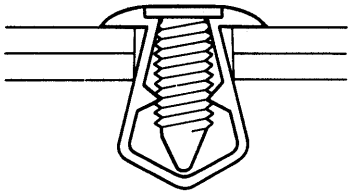	Removal Installation 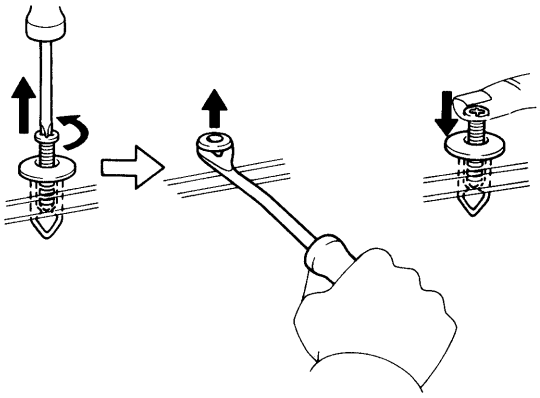

V00012

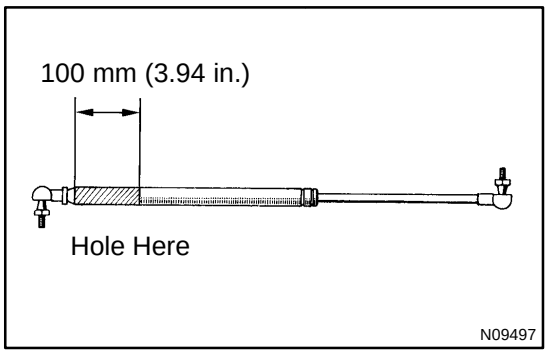

LUGGAGE COMPARTMENT DOOR SUPPORT

BO49O-01

REPLACEMENT

1. REMOVE DAMPER STAY

NOTICE:

When handling the damper.

- **Do not disassemble the damper because the cylinder is filled with pressurized gas.**
- **If the damper is to be replaced, drill a 2.0 - 3.0 mm (0.079 - 0.118 in.) hole in the bottom of the removed damper cylinder to completely release the high - pressure gas before disposing of it.**
- **When drilling, chips may out so work carefully**
- **The gas in colorless, order and non - toxic.**
- **When working, handle the damper carefully. Never score or scratch the exposed part of the piston red and never allow paint or get on it.**
- **Do not turn the piston rod and cylinder with the damper fully extended.**

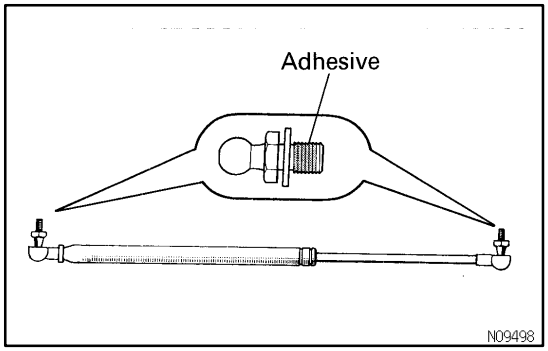

2. INSTALL DAMPER STAY

Apply adhesive to the bolts before tightening.

Part No. 08833-00070, THREE BOND 1324 or equivalent.

Torque: 26 N·m (260 kgf·cm, 19 in.·lbf)

RS031-03

REPLACEMENT

REPLACEMENT REQUIREMENTS

In the following cases, replace the steering wheel pad, steering wheel or spiral cable.

Case	Replacing part
If the airbag has been deployed.	Steering wheel pad
If the steering wheel pad has been found to be faulty in troubleshooting.	Steering wheel pad
If the spiral cable has been found to be faulty in troubleshooting.	Spiral cable
If the steering wheel pad has been found to be faulty during checking items. (See page RS-9)	Steering wheel pad
If the steering wheel has been found to be faulty during checking items. (See page RS-9)	Steering wheel
If the spiral cable has been found to be faulty during checking items. (See page RS-9)	Spiral cable
If the steering wheel pad has been dropped.	Steering wheel pad

CAUTION:

For replacement of the steering wheel pad, see page SR-12 and SR-17, and be sure to follow the correct procedure.

AUTOMATIC TRANSAXLE (A246E)

SS1CZ-01

SERVICE DATA

Line pressure (Wheel locked)		
	Engine idling	
	D position	373 - 441 kPa (3.8 - 4.5 kgf/cm^2, 54 - 64 psi)
	R position	598 - 716 kPa (6.1 - 7.3 kgf/cm^2, 87 - 104 psi)
	AT stall (Throttle valve fully opened)	
	D position	980 - 1,138 kPa (10.0 - 11.6 kgf/cm^2, 142 - 165 psi)
	R position	1,393 - 1,716 kPa (14.2 - 17.5 kgf/cm^2, 201 - 249 psi)
Engine stall revolution	D and R positions	2,550 ± 150 rpm
Time lag	N → D position	Less than 1.2 seconds
	N → R position	Less than 1.5 seconds
Engine idle speed	N position	700 ± 50 rpm
Throttle cable adjustment (Throttle valve fully opened)		Between boot end face and inner cable stopper 0 - 1 mm (0 - 0.04 in.)
Drive plate runout	Max.	0.20 mm (0.0079 in.)
Torque converter clutch runout	Max.	0.30 mm (0.0118 in.)
Torque converter clutch installation distance		More than 22.8 mm (0.90 in.)
Differential oil seal drive in depth	LH side	4.3 ± 0.5 mm (0.209 ± 0.020 in.)
	RH side	3.1 ± 0.5 mm (0.122 ± 0.020 in.)
Shift point		
D position		
(Throttle valve fully opened)	1 → 2	49 - 56 km/h (30 - 35 mph)
	2 → 3	91 - 100 km/h (57 - 62 mph)
	3 → O/D	130 - 143 km/h (81 - 89 mph)
	O/D → 3	124 - 137 km/h (77 - 85 mph)
	3 → 2	86 - 94 km/h (53 - 58 mph)
	2 → 1	40 - 46 km/h (25 - 29 mph)
(Throttle valve fully closed)	3 → O/D	36 - 43 km/h (22 - 27 mph)
	O/D → 3	17 - 23 km/h (11 - 14 mph)
2 position		
(Throttle valve fully opened)	1 → 2	52 - 60 km/h (32 - 37 mph)
	2 → 1	40 - 47 km/h (25 - 29 mph)
L position		
(Throttle valve fully opened)	2 → 1	46 - 52 km/h (29 - 32 mph)
Lock-up point (Throttle valve fully opened)		
D position		
*3rd Gear (O/D main switch OFF)		
	Lock-up ON	68 - 75 km/h (42 - 47 mph)
	Lock-up OFF	60 - 67 km/h (37 - 42 mph)
O/D gear		
	Lock-up ON	79 - 86 km/h (49 - 53 mph)
	Lock-up OFF	69 - 77 km/h (43 - 48 mph)
*: O/D main switch OFF (D position) HINT: (1) There is no lock-up in the 2 and L positions. (2) In the following cases, the lock-up will be released regardless of the lock-up pattern. ● When the throttle valve is completely closed. ● When the brake light switch is ON. (3) Shift-up to O/D will not occur when the engine coolant temp. is below 55 ˚C (131 ˚F).		

CHARGING (5S-FE)

SS0MW-10

SERVICE DATA

Battery	Voltage	at 20˚C (68˚F)	12.7 - 12.9 V
Drive belt	Tension	w/ A/C New belt	175 ± 5 lbf
		Used belt	115 ± 20 lbf
		w/o A/C New belt	125 ± 25 lbf
		Used belt	95 ± 20 lbf
Generator	Rated output	M/T	12 V 70 A
		A/T	12 V 80 A
	Rotor coil resistance		2.7 - 3.1 Ω
	Slip ring diameter	STD	14.2 - 14.4 mm (0.559 - 0.567 in.)
		Minimum	14.0 mm (0.551 in.)
	Brush exposed length	STD	10.5 mm (0.413 in.)
		Minimum	1.5 mm (0.059 in.)
Voltage regulator	Regulating voltage	at 25˚C (77˚F)	14.0 - 15.1 V
		at 115˚C (239˚F)	13.5 - 14.3 V

COOLING (5S-FE)

SS0MO-04

SERVICE DATA

Thermostat	Valve opening temperature		80 - 84˚C (176 - 183˚F)
	Valve lift	at 95˚C (203˚F)	8 mm (0.31 in.) or more
Radiator cap	Relief valve opening pressure	STD	74 - 103 kPa (0.75 - 1.05 kgf/cm^2, 10.7 - 14.9 psi)
		Minimum	59 kPa (0.6 kgf/cm^2, 8.5 psi)
Electric cooling fan	Rotating amperage	No.1	5.7 - 7.7 A
		No.2	6.4 - 7.4 A

EMISSION CONTROL (5S-FE)

SS0ML-02

SERVICE DATA

VSV for EGR	Resistance	at 20˚C (68˚F)	33 - 39 Ω

ENGINE MECHANICAL (5S-FE)

SS0MI-07

SERVICE DATA

Compression pressure		at 250 rpm STD	1,226 kPa (12.5 kgf/cm^2, 178 psi) or more
		Minimum	981 kPa (10.0 kgf/cm^2, 142 psi)
	Difference of pressure between each cylinder		98 kPa (1.0 kgf/cm^2, 14 psi) or less
Valve clearance		at cold Intake	0.19 - 0.29 mm (0.007 - 0.011 in.)
		Exhaust	0.28 - 0.38 mm (0.011 - 0.015 in.)
	Adjusting shim (for repair part)	Mark 2.500	2.500 mm (0.0984 in.)
		Mark 2.550	2.550 mm (0.1004 in.)
		Mark 2.600	2.600 mm (0.1024 in.)
		Mark 2.650	2.650 mm (0.1043 in.)
		Mark 2.700	2.700 mm (0.1063 in.)
		Mark 2.750	2.750 mm (0.1083 in.)
		Mark 2.800	2.800 mm (0.1102 in.)
		Mark 2.850	2.850 mm (0.1122 in.)
		Mark 2.900	2.900 mm (0.1142 in.)
		Mark 2.950	2.950 mm (0.1161 in.)
		Mark 3.000	3.000 mm (0.1181 in.)
		Mark 3.050	3.050 mm (0.1201 in.)
		Mark 3.100	3.100 mm (0.1220 in.)
		Mark 3.150	3.150 mm (0.1240 in.)
		Mark 3.200	3.200 mm (0.1260 in.)
		Mark 3.250	3.250 mm (0.1280 in.)
		Mark 3.300	3.300 mm (0.1299 in.)
Ignition timing	w/ Terminals TE1 and E1 connected of DLC1		10˚ BTDC @ idle
Idle speed	-		750 ± 50 rpm
Intake mainfold vacuum		at idle speed	60 kPa (450 mmHg, 17.7 in.Hg)
Idler pulley tension spring	Free length		46.0 mm (1.811 in.)
	Installed load at 50.5 mm (1.988 in.)		32 - 37 N (3.25 - 3.75 kgf, 7.2 - 8.3 lbf)
Cylinder head	Warpage		
	Cylinder block side	Maximum	0.05 mm (0.0020 in.)
	Manifold side	Maximum	0.08 mm (0.0031 in.)
	Valve seat		
	Refacing angle		30˚, 45˚, 75˚
	Contacting angle		45˚
	Contacting width		1.0 - 1.4 mm (0.039 - 0.055 in.)
Valve guide bushing	Inside diameter		6.010 - 6.030 mm (0.2366 - 0.2374 in.)
	Outside diameter (for repair part)	STD	11.000 - 11.027 mm (0.4331 - 0.4342 in.)
		O/S 0.05	11.050 - 11.077 mm (0.4350 - 0.4361 in.)
Valve	Valve overall length	STD Intake	97.40 - 97.80 mm (3.8346 - 3.8504 in.)
		Exhaust	98.25 - 98.65 mm (3.8681 - 3.8839 in.)
		Minimum Intake	97.1 mm (3.823 in.)
		Exhaust	98.0 mm (3.858 in.)
	Vale face angle		44.5˚
	Stem diameter	Intake	5.970 - 5.985 mm (0.2350 - 0.2356 in.)
		Exhaust	5.965 - 5.980 mm (0.2348 - 0.2354 in.)
	Stem oil clearance	STD Intake	0.025 - 0.060 mm (0.0010 - 0.0024 in.)
		Exhaust	0.030 - 0.065 mm (0.0012 - 0.0026 in.)
		Maximum Intake	0.08 mm (0.0031 in.)
		Exhaust	0.10 mm (0.0039 in.)
	Margin thickness	STD	0.8 - 1.2 mm (0.031 - 0.047 in.)
		Minimum	0.5 mm (0.020 in.)

Valve spring	Deviation	Maximum	2.0 mm (0.079 in.)
	Free length		41.79 - 41.99 mm (1.6453 - 1.6531 in.)
	Installed tension at 34.7 mm (1.366 in.)		164 - 189 N (16.7 - 19.3 kgf, 36.8 - 42.5 lbf)
Valve lifter	Lifter diameter		30.966 - 30.976 mm (1.2191 - 1.2195 in.)
	Lifter bore diameter		31.000 - 31.018 mm (1.2205 - 1.2212 in.)
	Oil clearance	STD	0.024 - 0.052 mm (0.0009 - 0.0020 in.)
		Maximum	0.07 mm (0.0028 in.)
Manifold	Warpage	Maximum	0.30 mm (0.0118 in.)
Camshaft	Thrust clearance	STD Intake	0.045 - 0.100 mm (0.0018 - 0.0039 in.)
		Exhaust	0.030 - 0.085 mm (0.0012 - 0.0033 in.)
		Maximum Intake	0.12 mm (0.0047 in.)
		Exhaust	0.10 mm (0.0039 in.)
	Journal oil clearance	STD	0.025 - 0.062 mm (0.0010 - 0.0024 in.)
		Maximum	0.10 mm (0.0039 in.)
	Journal diameter		26.959 - 26.975 mm (1.0614 - 1.0620 in.)
	Circle runout	Maximum	0.04 mm (0.0016 in.)
	Cam lobe height	STD Intake	42.01 - 42.11 mm (1.6539 - 1.6579 in.)
		Exhaust	40.06 - 40.16 mm (1.5772 - 1.5811 in.)
		Minimum Intake	41.90 mm (1.6496 in.)
		Exhaust	39.95 mm (1.5728 in.)
	Camshaft gear backlash	STD	0.020 - 0.200 mm (0.0008 - 0.0079 in.)
		Maximum	0.30 mm (0.0188 in.)
	Camshaft gear spring end free distance		22.5 - 22.9 mm (0.886 - 0.902 in.)
Cylinder block	Cylinder head surface warpage	Maximum	0.05 mm (0.0020 in.)
	Cylinder bore diameter	STD Mark 1	87.000 - 87.010 mm (3.4252 - 3.4256 in.)
		Mark 2	87.010 - 87.020 mm (3.4256 - 3.4260 in.)
		Mark 3	87.020 - 87.030 mm (3.4260 - 3.4264 in.)
		Maximum STD	87.23 mm (3.4342 in.)
		O/S 0.50	87.73 mm (3.4350 in.)
Piston and piston ring	Piston diameter	STD Mark 1	86.850 - 86.860 mm (3.4193 - 3.4197 in.)
		Mark 2	86.860 - 86.870 mm (3.4197 - 3.4201 in.)
		Mark 3	86.870 - 86.880 mm (3.4201 - 3.4205 in.)
		O/S 0.50	87.350 - 87.380 mm (3.4390 - 3.4402 in.)
	Piston oil clearance	STD	0.14 - 0.16 mm (0.0055 - 0.0063 in.)
		Maximum	0.18 mm (0.0071 in.)
	Piston ring groove clearance	No.1	0.040 - 0.080 mm (0.0016 - 0.0031 in.)
		No.2	0.030 - 0.070 mm (0.0012 - 0.0028 in.)
	Piston ring end gap	STD No.1	0.270 - 0.500 mm (0.0106 - 0.0197 in.)
		No.2	0.350 - 0.600 mm (0.0138 - 0.0236 in.)
		Oil	0.200 - 0.550 mm (0.0079 - 0.0217 in.)
		Maximum No.1	1.10 mm (0.0433 in.)
		No.2	1.20 mm (0.0472 in.)
		Oil	1.15 mm (0.0453 in.)

Connecting rod	Thrust clearance	STD	0.160 - 0.312 mm (0.0063 - 0.0123 inb.)
		Maximum	0.35 mm (0.0138 in.)
	Connecting rod bearing center wall thickness		
	Reference	STD Mark 1	1.484 - 1.488 mm (0.0584 - 0.0586 in.)
		Mark 2	1.488 - 1.492 mm (0.0586 - 0.0587 in.)
		Mark 3	1.492 - 1.496 mm (0.0587 - 0.0589 in.)
	Connecting rod oil clearance	STD STD	0.024 - 0.055 mm (0.0009 - 0.0022 in.)
		U/S 0.25	0.023 - 0.069 mm (0.0009 - 0.0027 in.)
		Maximum	0.08 mm (0.0031 in.)
	Rod bend	Maximum per 100 mm (3.94 in.)	0.05 mm (0.0020 in.)
	Rod twist	Maximum per 100 mm (3.94 in.)	0.15 mm (0.0059 in.)
	Bushing inside diameter		22.005 - 22.017 mm (0.8663 - 0.8668 in.)
	Piston pin diameter		21.997 - 22.009 mm (0.8660 - 0.8665 in.)
	Piston pin oil clearance	STD	0.005 - 0.011 mm (0.0002 - 0.0004 in.)
		Maximum	0.05 mm (0.0020 in.)
	Connecting rod bolt outside diameter	STD	7.860 - 8.000 mm (0.3094 - 0.3150 in.)
		Minimum	7.60 mm (0.2992 in.)
Crankshaft	Thrust clearance	STD	0.020 - 0.220 mm (0.0008 - 0.0087 in.)
		Maximum	0.30 mm (0.0118 in.)
	Thrust washer thickness		2.440 - 2.490 mm (0.0961 - 0.0980 in.)
	Main journal oil clearance	STD No.3 STD	0.025 - 0.044 mm (0.0010 - 0.0017 in.)
		U/S 0.25	0.027 - 0.067 mm (0.0011 - 0.0026 in.)
		Others STD	0.015 - 0.034 mm (0.0006 - 0.0013 in.)
		U/S 0.25	0.019 - 0.059 mm (0.0007 - 0.0023 in.)
		Maximum	0.08 mm (0.0031 in.)
	Main journal diameter	STD	54.988 - 55.003 mm (2.1653 - 2.1655 in.)
		U/S 0.25	54.745 - 54.755 mm (2.1553 - 2.1557 in.)
	Main bearing center wall thickness (Reference)		
		STD No.3 Mark 1	1.992 - 1.995 mm (0.0784 - 0.0785 in.)
		Mark 2	1.995 - 1.998 mm (0.0785 - 0.0787 in.)
		Mark 3	1.998 - 2.001 mm (0.0787 - 0.0788 in.)
		Mark 4	2.001 - 2.004 mm (0.0788 - 0.0789 in.)
		Mark 5	2.004 - 2.007 mm (0.0789 - 0.0790 in.)
		Others Mark 1	1.997 - 2.000 mm (0.0786 - 0.0787 in.)
		Mark 2	2.000 - 2.003 mm (0.0787 - 0.0789 in.)
		Mark 3	2.003 - 2.006 mm (0.0789 - 0.0790 in.)
		Mark 4	2.006 - 2.009 mm (0.0790 - 0.0791 in.)
		Mark 5	2.009 - 2.012 mm (0.0791 - 0.0792 in.)
	Crank pin diameter	STD	51.985 - 52.000 mm (2.0466 - 2.0472 in.)
		U/S 0.25	51.745 - 51.755 mm (2.0372 - 2.0376 in.)
	Circle runout	Maximum	0.06 mm (0.0024 in.)
	Main journal taper and out-of-round	Maximum	0.02 mm (0.0008 in.)
	Crank pin taper and out-of-round	Maximum	0.02 mm (0.0008 in.)

LUBRICATION (5S-FE)

SS0MQ-05

SERVICE DATA

Oil pressure		at idle speed	29 kPa (0.3 kgf/cm^2, 43 psi) or more
		at 3,000 rpm	245 - 490 kPa (2.5 - 5.0 kgf/cm^2, 36 - 71 psi)
Oil pump	Body clearance	STD	0.10 - 0.16 mm (0.0039 - 0.0063 in.)
		Maximum	0.20 mm (0.0079 in.)
	Tip clearance	STD	0.04 - 0.16 mm (0.0016 - 0.0063 in.)
		Maximum	0.20 mm (0.0079 in.)

SFI (5S-FE)

SERVICE DATA

SS0MM-15

Fuel pressure regulator	Fuel pressure	at no vacuum	265 - 304 kPa (2.7 - 3.1 kgf/cm^2, 38 - 44 psi)
Fuel pump	Resistance	at 20˚C (68˚F)	0.2 - 3.0 Ω
Injector	Resistance	at 20˚C (68˚F)	13.4 - 14.2 Ω
	Injection volume		51 - 64 cm^3 (3.1 - 3.9 cu in.) per 15 seconds
	Difference between each cylinder		5 cm^3 (0.3 cu in.) or less
	Fuel leakage		One drop or less per minute
Throttle body	Throttle body fully closed angle		6˚
	Throttle opener setting speed		1,300 - 1,500 rpm (w/ Cooling fan OFF)
Throttle position sensor	Clearance between stop screw and lever		
	0 mm (0 in.)	VTA - E2	0.2 - 5.7 kΩ
	Throttle valve fully open	VTA - E2	2.0 - 10.2 kΩ
	-	VC - E2	2.5 - 5.9 kΩ
IAC valve	Resistance (+B - ISCC or ISCO) at 20˚C (68˚F)		19.3 - 22.3 Ω
ECT sensor	Resistance	at -20˚C (-4˚F)	10 - 20 kΩ
		at 0˚C (32˚F)	4 - 7 kΩ
		at 20˚C (68˚F)	2 - 3 kΩ
		at 40˚C (104˚F)	0.9 - 1.3 kΩ
		at 60˚C (140˚F)	0.4 - 0.7 kΩ
		at 80˚C (176˚F)	0.2 - 0.4 kΩ
IAT sensor	Resistance	at -20˚C (-4˚F)	10 - 20 kΩ
		at 0˚C (32˚F)	4 - 7 kΩ
		at 20˚C (68˚F)	2 - 3 kΩ
		at 40˚C (104˚F)	0.9 - 1.3 kΩ
		at 60˚C (140˚F)	0.4 - 0.7 kΩ
		at 80˚C (176˚F)	0.2 - 0.4 kΩ
MAP sensor	Power source voltage		4.5 - 5.5 V
Fuel cut rpm	Fuel return rpm		1,500 rpm

CHARGING (7A-FE)

SS1CV-02

SERVICE DATA

Battery	Voltage (Maintenance-free battery)	at 20˚C (68˚F)	12.7 - 12.9 V
	Specific gravity (Except maintenance-free battery)	at 20˚C (68˚F)	1.25 - 1.27
Drive belt	Tension	New belt	175 ± 5 lbf
		Used belt	115 ± 20 lbf
Generator	Rated output		12 V - 70 A
	Rotor coil resistance		2.8 - 3.0 Ω
	Slip ring diameter	STD	14.2 mm - 14.4 mm (0.559 - 0.567 in.)
		Minimum	14.0 mm (0.551 in.)
	Brush exposed length	STD	10.5 mm (0.413 in)
		Minimum	1.5 mm (0.059 in.)
Voltage regulator	Regulating voltage	at 25˚C (77˚F)	14.0 - 15.0 V
		at 115˚C (239˚F)	13.5 - 14.3 V

COOLING (7A-FE)

SS1CN-01

SERVICE DATA

Thermostat	Valve opening temperature Valve lift at 95˚C (203˚F)	80 - 84˚C (176 - 183˚F) 8 mm (0.31 in.) or more
Radiator cap	Relief valve opening pressure STD Minimum	74 - 103 kPa (0.75 - 1.05 kgf/cm^2, 10.7 - 14.9 psi) 59 kPa (0.6 kgf/cm^2, 8.5 psi)
No. 1 cooling fan	Rotating amperage	5.8 - 7.4 A
No. 2 cooling fan	Rotating amperage	5.7 - 7.7 A

ENGINE MECHANICAL (7A-FE)

SS1CI-02

SERVICE DATA

Compression pressure	at 250 rpm	STD	1,320 kPa (13.5 kgf/cm^2, 191 psi) or more
		Minimum	981 kPa (10.0 kgf/cm^2, 142 psi)
	Difference of pressure between each cylinder		98 kPa (1.0 kgf/cm^2, 14 psi) or less
Valve clearance		at cold Intake	0.15 - 0.25 mm (0.006 - 0.010 in.)
		Exhaust	0.25 - 0.35 mm (0.010 - 0.014 in.)
	adjusting shim (for repair part)	Mark 2.550	2.55 mm (0.1004 in.)
		Mark 2.600	2.60 mm (0.1024 in.)
		Mark 2.650	2.65 mm (0.1043 in.)
		Mark 2.700	2.70 mm (0.1063 in.)
		Mark 2.750	2.75 mm (0.1083 in.)
		Mark 2.800	2.80 mm (0.1102 in.)
		Mark 2.850	2.85 mm (0.1122 in.)
		Mark 2.900	2.90 mm (0.1142 in.)
		Mark 2.950	2.95 mm (0.1161 in.)
		Mark 3.000	3.00 mm (0.1181 in.)
		Mark 3.050	3.05 mm (0.1201 in.)
		Mark 3.100	3.10 mm (0.1220 in.)
		Mark 3.150	3.15 mm (0.1240 in.)
		Mark 3.200	3.20 mm (0.1260 in.)
		Mark 3.250	3.25 mm (0.1280 in.)
		Mark 3.300	3.30 mm (0.1299 in.)
Ignition timing			10 ± 2˚ BTDC @ idle (w/ Terminals TE_1 and E_1 connected of DLC1)
Idle speed	-		700 ± 50 rpm
Intake manifold vacuum	at idle speed		43 kPa (320 mmHg, 12.6 in.Hg) or more
Idler pulley tension spring	Free length		31.76 mm (1.250 in.)
	Installed load at 37.6 mm (1.480 in.)		47.5 - 51.5 N (4.85 - 5.25 kgf, 10.7 - 11.6 lbf)
Cylinder head	Warpage		
	Cylinder block side	Maximum	0.05 mm (0.020 in.)
	Manifold side	Maximum	0.10 mm (0.039 in.)
	Valve seat		
	Refacing angle		30˚, 45˚, 60˚
	Contacting angle		45˚
	Contacting width		1.0 - 1.4 mm (0.039 - 0.055 in.)
Valve guide bushing	Inside diameter		6.010 - 6.030 mm (0.2366 - 0.2374 in.)
	Outside diameter (for repair part)	STD	11.000 - 11.027 mm (0.4331 - 0.4341 in.)
		O/S 0.05	11.050 - 11.077 mm (0.4350 - 0.4361 in.)
Valve	Valve overall length	STD Intake	87.45 mm (3.4429 in.)
		Exhaust	87.84 mm (3.4583 in.)
		Minimum Intake	86.95 mm (3.4232 in.)
		Exhaust	87.34 mm (3.4386 in.)
	Vale face angle		44.5˚
	Stem diameter	Intake	5.970 - 5.985 mm (0.2350 - 0.2356 in.)
		Exhaust	5.965 - 5.980 mm (0.2348 - 0.2354 in.)
	Stem oil clearance	STD Intake	0.025 - 0.060 mm (0.0010 - 0.0024 in.)
		Exhaust	0.030 - 0.065 mm (0.0012 - 0.0026 in.)
		Maximum Intake	0.08 mm (0.0031 in.)
		Exhaust	0.10 mm (0.0039 in.)
	Margin thickness	STD	0.8 - 1.2 mm (0.031 - 0.047 in.)
		Minimum	0.5 mm (0.020 in.)

Valve spring	Deviation	Maximum	2.0 mm (0.079 in.)
	Free length		38.57 mm (1.5185 in.)
	Installed tension at 31.7 mm (1.248 in.)		166 N (16.9 kgf, 37.3 lbf)
Camshaft	Thrust clearance	STD Intake	0.030 - 0.085 mm (0.0012 - 0.0033 in.)
		Exhaust	0.035 - 0.090 mm (0.0014 - 0.0035 in.)
		Maximum	0.11 mm (0.0043 in.)
	Journal oil clearance	STD	0.035 - 0.072 mm (0.0014 - 0.0028 in.)
		Maximum	0.10 mm (0.0039 in.)
	Journal diameter	Exhaust No.1	24.949 - 24.965 mm (0.9822 - 0.9829 in.)
		Others	22.949 - 22.965 mm (0.9035 - 0.9041 in.)
	Circle runout	Maximum	0.04 mm (0.0016 in.)
	Cam lobe height	STD Intake	42.610 - 42.710 mm (1.6776 - 1.6815 in.)
		Exhaust	41.960 - 42.060 mm (1.6520 - 1.6560 in.)
		Minimum Intake	42.20 mm (1.6614 in.)
		Exhaust	41.55 mm (1.6358 in.)
	Camshaft gear backlash	STD	0.020 - 0.200 mm (0.0008 - 0.0079 in.)
		Maximum	0.30 mm (0.0188 in.)
	Camshaft gear spring end free distance		17.0 - 17.6 mm (0.669 - 0.693 in.)
Valve lifter	Lifter diameter		30.966 - 30.976 mm (1.2191 - 1.2195 in.)
	Lifter bore diameter		31.000 - 31.025 mm (1.2205 - 1.2215 in.)
	Oil clearance	STD	0.024 - 0.059 mm (0.0009 - 0.0023 in.)
		Maximum	0.07 mm (0.0028 in.)
Manifold	Warpage	Maximum Intake	0.20 mm (0.0079 in.)
		Exhaust	0.30 mm (0.0118 in.)
Spark plug tube	Protrusion		46.8 - 47.6 mm (1.843 - 1.874 in.)
Cylinder block	Cylinder head surface warpage	Maximum	0.05 mm (0.0020 in.)
	Cylinder bore diameter	STD Mark 1	81.000 - 81.010 mm (3.1890 - 3.1894 in.)
		Mark 2	81.010 - 81.020 mm (3.1894 - 3.1898 in.)
		Mark 3	81.020 - 81.030 mm (3.1898 - 3.1902 in.)
		Maximum STD	81.23 mm (3.1982 in.)
		O/S 0.50	81.73 mm (3.2177 in.)
	Main journal bore diameter	Mark 1	52.025 - 52.031 mm (2.0482 - 2.0485 in.)
		Mark 2	52.031 - 52.037 mm (2.0485 - 2.0487 in.)
		Mark 3	52.037 - 52.043 mm (2.0487 - 2.0489 in.)
Piston and piston ring	Piston diameter	STD Mark 1	80.905 - 80.915 mm (3.1852 - 3.1856 in.)
		Mark 2	80.915 - 80.925 mm (3.1856 - 3.1860 in.)
		Mark 3	80.925 - 80.935 mm (3.1860 - 3.1864 in.)
		O/S 0.50	81.405 - 81.435 mm (3.2049 - 3.2061 in.)
	Piston oil clearance	STD	0.085 - 0.105 mm (0.0033 - 0.0041 in.)
		Maximum	0.20 mm (0.0079 in.)
	Piston ring groove clearance	No.1	0.008 - 0.080 mm (0.0003 - 0.0031 in.)
		No.2	0.030 - 0.070 mm (0.0012 - 0.0028 in.)
	Piston ring end gap	STD No.1	0.250 - 0.350 mm (0.0098 - 0.0138 in.)
		No.2	0.350 - 0.500 mm (0.0138 - 0.0197 in.)
		Oil	0.100 - 0.400 mm (0.0039 - 0.0157 in.)
		Maximum No.1	1.05 mm (0.0413 in.)
		No.2	1.20 mm (0.0472 in.)
		Oil	1.10 mm (0.0433 in.)

Connecting rod	Thrust clearance	STD	0.15 - 0.25 mm (0.0059 - 0.0098 in.)
		Maximum	0.30 mm (0.0118 in.)
	Connecting rod bearing center wall thickness		
	Reference	STD Mark 1	1.486 - 1.490 mm (0.0585 - 0.0587 in.)
		Mark 2	1.490 - 1.494 mm (0.0587 - 0.0588 in.)
		Mark 3	1.494 - 1.498 mm (0.0588 - 0.0590 in.)
	Connecting rod oil clearance	STD STD	0.020 - 0.048 mm (0.0008 - 0.0019 in.)
		U/S 0.25	0.019 - 0.058 mm (0.0007 - 0.0022 in.)
		Maximum	0.08 mm (0.0031 in.)
	Rod out-of-alignment		
	Maximum per 100 mm (3.94 in.)		0.05 mm (0.0020 in.)
	Rod twist Maximum per 100 mm (3.94 in.)		0.05 mm (0.0020 in.)
	Connecting rod bolt outside diameter	STD	8.860 - 9.000 mm (0.3488 - 0.3543 in.)
		Minimum	8.60 mm (0.3386 in.)
Crankshaft	Thrust clearance	STD	0.015 - 0.220 mm (0.0006 - 0.0087 in.)
		Maximum	0.30 mm (0.0118 in.)
	Thrust washer thickness		2.440 - 2.490 mm (0.0961 - 0.0980 in.)
	Main journal oil clearance	STD STD	0.015 - 0.033 mm (0.0006 - 0.0013 in.)
		U/S 0.25	0.016 - 0.056 mm (0.0006 - 0.0022 in.)
		Maximum	0.08 mm (0.0031 in.)
	Main journal diameter	STD	47.982 - 48.000 mm (1.8891 - 1.8898 in.)
		U/S 0.25	47.745 - 47.755 mm (1.8797 - 1.8801 in.)
	Crankshaft journal diameter	Mark 0	47.994 - 48.000 mm (1.8895 - 1.8898 in.)
		Mark 1	47.988 - 47.994 mm (1.8893 - 1.8895 in.)
		Mark 2	47.982 - 47.988 mm (1.8891 - 1.8893 in.)
	Main bearing center wall thickness		
	Reference	STD Mark 1	2.002 - 2.005 mm (0.0788 - 0.0789 in.)
		Mark 2	2.005 - 2.008 mm (0.0789 - 0.0791 in.)
		Mark 3	2.008 - 2.011 mm (0.0791 - 0.0792 in.)
		Mark 4	2.011 - 2.014 mm (0.0792 - 0.0793 in.)
		Mark 5	2.014 - 2.017 mm (0.0793 - 0.0794 in.)
	Crank pin diameter	STD	47.988 - 48.000 mm (1.8893 - 1.8898 in.)
		U/S 0.25	47.745 - 47.555 mm (1.8797 - 1.8801 in.)
	Circle runout	Maximum	0.03 mm (0.0012 in.)
	Main journal taper and out-of-round	Maximum	0.005 mm (0.0002 in.)
	Crank pin taper and out-of-round	Maximum	0.005 mm (0.0002 in.)

IGNITION (7A-FE)

SS1CR-02

SERVICE DATA

Firing order	-		1 - 3 - 4 - 2
High-tension cord	Resistance	Maximum	25 kΩ per cord
Spark plug	Recommended spark plug	ND	K16R-U
		NGK	BKR5EYA
	Correct electrode gap		0.8 mm (0.031 in.)
Ignition coil	Primary coil resistance	at cold	0.36 - 0.55 Ω
		at hot	0.45 - 0.65 Ω
	Secondary coil resistance	at cold	9.0 - 15.4 kΩ
		at hot	11.4 - 18.1 kΩ
Distributor	Air gap		0.2 - 0.4 mm (0.008 - 0.016 in.)
	Signal generator (pickup coil) resistance		
	G⊕ - G⊖	at cold	185 - 275 Ω
		at hot	240 - 325 Ω
Crankshaft position sensor	Resistance NE⊕ - NE⊖	at cold	1,630 - 2,740 Ω
		at hot	2,065 - 3,225 Ω

SFI (7A-FE)

SERVICE DATA

SS1CL-02

Fuel pressure regulator	Fuel pressure	at no vacuum	265 - 304 kPa (2.7 - 3.1 kgf/cm^2, 38 - 44 psi)
Fuel pump	Resistance	at 20˚C (68˚F)	0.2 - 3.0 Ω
Injector	Resistance	at 20˚C (68˚F)	13.4 - 14.2 Ω
	Injection volume		39 - 49 cm^3 (2.3 - 3.0 cu in.) per 15 seconds
	Difference between each cylinder		5 cm^3 (0.3 cu in.) or less
	Fuel leakage		One drop or less per minute
Throttle body	Throttle body fully closed angle		6.5˚
	Throttle opener setting speed		1,300 - 1,500 rpm (w/ Cooling fan OFF)
Throttle position sensor	Clearance between stop screw and lever		
	0 mm (0 in.)	VTA - E2	0.2 - 5.7 kΩ
	0.40 mm (0.016 in.)	IDL - E2	2.3 kΩ or less
	0.90 mm (0.035 in.)	IDL - E2	Infinity
	Throttle valve fully open	VTA - E2	2.0 - 10.2 kΩ
	-	VC - E2	2.5 - 5.9 kΩ
IAC valve	Resistance (+B - RSC or RSO)	at cold	17.0 - 24.5 Ω
		at hot	21.5 - 28.5 Ω
VSV for EGR	Resistance	at 20˚C (68˚F)	37 - 44 Ω
ECT sensor and IAT sensor	Resistance	at -20˚C (-4˚F)	10 - 20 kΩ
		at 0˚C (32˚F)	4 - 7 kΩ
		at 20˚C (68˚F)	2 - 3 kΩ
		at 40˚C (104˚F)	0.9 - 1.3 kΩ
		at 60˚C (140˚F)	0.4 - 0.7 kΩ
		at 80˚C (176˚F)	0.2 - 0.4 kΩ
MAP sensor	Power source voltage		4.5 - 5.5 V
Heated oxygen sensor	Resistance	at 20˚C (68˚F)	11 - 16 Ω
Fuel cut rpm	Fuel return rpm		1,400 rpm

STARTING (7A-FE)

SERVICE DATA

SS1CT-02

Starter	Rated voltage and output power			12 V 1.2 kW, 1.4 kW
	No-load characteristics		Current	90 A or less at 11. 5 V
			rpm	3,000 rpm or more
	Brush length		STD	15.0 mm (0.591 in.)
			Minimum	8.0 mm (0.351 in.)
	Spring installed load	STD	1.2 kW type	13.7 - 19.6 N (1.4 - 1.8 kgf, 3.1 - 4.0 lbf)
			1.4 kW type	17.6 - 23.5 N (1.8 - 2.4 kgf, 4.0 - 5.3 lbf)
		Minimum	1.2 kW type	9.8 N (1.0 kgf, 2.2 lbf)
			1.4 kW type	11.8 N (1.2 kgf, 2.6 lbf)
	Commutator			
	Diameter		STD	30 mm (1.18 in.)
			Minimum	29 mm (1.14 in.)
	Undercut depth		STD	0.6 mm (0.024 in.)
			Minimum	0.2 mm (0.008 in.)
	Circle runout		Maximum	0.05 mm (0.0020 in.)
	Magnetic switch			
	Contact plate for wear		Maximum	0.9 mm (0.035 in.)

AUTOMATIC TRANSAXLE (A140E)

SS0LY-04

SERVICE DATA

Line pressure (Wheel locked)		
	Engine idling	
	D position	363 - 422 kPa (3.7 - 4.3 kgf/cm^2, 53 - 61 psi)
	R position	618 - 794 kPa (6.3 - 8.1 kgf/cm^2, 90 - 115 psi)
	AT stall (Throttle valve fully opened)	
	D position	735 - 863 kPa (7.5 - 8.8 kgf/cm^2, 107 - 125 psi)
	R position	1,373 - 1,608 kPa (14.0 - 16.4 kgf/cm^2, 199 - 233 psi)
Engine stall revolution	D and R positions	2,450 ± 150 rpm
Time lag	N → D position	Less than 1.2 seconds
	N → R position	Less than 1.5 seconds
Engine idle speed	A/C OFF and N position	750 ± 50 rpm
Throttle cable adjustment (Throttle valve fully opened)		Between boot end face and inner cable stopper 0 - 1 mm (0 - 0.04 in.)
Drive plate runout	Max.	0.20 mm (0.0079 in.)
Torque converter clutch runout	Max.	0.30 mm (0.0118 in.)
Torque converter clutch installation distance		More than 13.0 mm (0.512 in.)
Differential oil seal drive in depth	LH side	2.7 ± 0.5 mm (0.106 ± 0.020 in.)
	RH side	0 ± 0.5 mm (0 ± 0.020 in.)
Shift point		
D position		
(Throttle valve fully opened)	1 → 2	53 - 59 km/h (33 - 37 mph)
	2 → 3	99 - 108 km/h (62 - 68 mph)
	3 → O/D	142 - 152 km/h (89 - 95 mph)
	O/D → 3	132 - 142 km/h (83 - 89 mph)
	3 → 2	89 - 98 km/h (56 - 61 mph)
	2 → 1	41 - 46 km/h (26 - 29 mph)
(Throttle valve fully closed)	O/D → 3	19 - 23 km/h (12 - 14 mph)
	3 → O/D	53 - 58 km/h (33 - 36 mph)
2 position		
(Throttle valve fully opened)	1 → 2	53 - 59 km/h (33 - 37 mph)
	2 → 1	41 - 46 km/h (26 - 29 mph)
L position		
(Throttle valve fully opened)	2 → 1	45 - 50 km/h (28 - 31 mph)
Lock-up point (Throttle valve fully opened)		
D position		
3rd Gear (O/D main switch OFF)		
	Lock-up ON	65 - 71 km/h (41 - 44 mph)
	Lock-up OFF	60 - 65 km/h (38 - 41 mph)
O/D gear		
	Lock-up ON	76 - 82 km/h (48 - 51 mph)
	Lock-up OFF	70 - 75 km/h (44 - 47 mph)

SS1D0-02

TORQUE SPECIFICATION

Part tightened		N·m	kgf·cm	ft·lbf
Oil pan drain plug		17	175	13
Transaxle case x Oil pan		5.3	55	48 in.·lbf
Shift solenoid valves (See page AX-5)	A bolt	6.4	65	56 in.·lbf
	B bolt	10	100	7
Oil strainer		10	100	7
Detent spring		10	100	7
Valve body x Transaxle case		10	100	7
Wire retainer		6.4	65	56 in.·lbf
Park/neutral position switch x Manual shaft lever		6.4	71	61 in.·lbf
Park/neutral position switch x Transaxle case		5.4	55	48 in.·lbf
Lower center member x Body		35	360	26
Lower center member x Engine front mounting		80	815	59
Lower center member x Engine rear mounting		80	815	59
Engine rear mounting x Engine rear mounting bracket		88	890	64
Engine rear mounting x Exhaust pipe stay		19	195	14
Lower suspension arm x Lower ball joint		127	1,300	94
Tie rod end x Axle carrier		49	500	36
Drive shaft x Axle hub		216	2,200	159
Front exhaust pipe x Exhaust manifold		62	630	46
Front exhaust pipe x Center exhaust pipe		42	430	31
Front exhaust pipe x Exhaust pipe stay		25	250	18
Exhaust pipe stay x Front lower sub-frame		19	195	14
Starter x Transaxle case		39	400	29
Torque converter clutch x Drive plate		25	250	18
Shift control cable x Shift control lever		12	125	9
Engine left mounting bolts (Upper side)		52	530	38
Engine left mounting bolts (Lower side)		64	650	47
Engine x Transaxle housing (Upper side)		64	650	47
Engine x Transaxle housing (Lower side) (See page MX-3)	A bolt	23	230	17
	B bolt	46	470	34
Engine lower sub-frame x Body (See page MX-3)	A bolt	127	1,300	94
	B bolt	175	1,800	130
	C bolt	167	1,700	127

BODY ELECTRICAL

SS0LV-02

SERVICE DATA

TURN SIGNAL FLASHER	
Flashes/Minute	60 - 120
SPEEDOMETER (ON-VEHICLE)	
USA:	
Standard indication (mph)	Allowable range (mph)
20	19 - 22
40	39 - 42.5
60	59.5 - 63.5
80	80 - 85
100	100 - 105.5
120	120 - 125.5
CANADA:	
Standard indication (km/h)	Allowable range (km/h)
20	18 - 23
40	40 - 44
60	60 - 64.5
80	80 - 85
100	100 - 105
120	120 - 125.5
140	140 - 146
160	160 - 167
TACHOMETER (ON-VEHICLE)/ DC 13.5 V 25 ˚C at (77 ˚F)	
Standard indication (rpm)	Allowable range (rpm)
700	630 - 770
1,000	900 - 1,100
2,000	1,850 - 2,150
3,000	2,800 - 3,200
4,000	3,800 - 4,200
5,000	4,800 - 5,200
6,000	5,750 - 6,250
7,000	6,700 - 7,300
FUEL RECEIVER GAUGE	
Between terminals	Resistance (Ω)
A - B	Approx. 154.3
A - C	Approx. 126.2
B - C	Approx. 280.5
FUEL SENDER GAUGE	
Float position: mm (in.)	Resistance (Ω)
F: Approx. 27.6 (1.094)	Approx. 3.0
1/2: Approx. 33.7 (1.327)	Approx. 31.6
E: Approx. 92.7 (3.650)	Approx. 110.0
ENGINE COOLANT TEMPERATURE RECEIVER GAUGE	
Between terminals	Resistance (Ω)

A - B	Approx. 229.7
A - C	Approx. 54.0
B - C	Approx. 175.7
ENGINE COOLANT TEMPERATURE SENDER GAUGE	
Temperature ˚C (˚F)	Resistance (Ω)
50 (122.0)	160 - 240
120 (248.0)	17.1 - 21.2

BRAKE

SERVICE DATA

SS0LM-09

Brake pedal height from asphalt sheet		136.1 - 146.1 mm (5.358 - 5.752 in.)
Brake pedal freeplay		1 - 6 mm (0.04 - 0.24 in.)
Brake pedal reserve distance at 490 N (50 kgf, 110.2 lbf) 7A-FE		More than 75 mm (2.95 in.)
Brake pedal reserve distance at 490 N (50 kgf, 110.2 lbf) 5S-FE		More than 80 mm (3.15 in.)
Brake booster push rod to piston clearance (w/SST)		0 mm (0.in.)
Front brake pad thickness 7A-FE	STD	12.0 mm (0.472 in.)
Front brake pad thickness 5S-FE	STD	11.0 mm (0.433 in.)
Front brake pad thickness	Minimum	1.0 mm (0.039 in.)
Front brake disc thickness 7A-FE	STD	25.0 mm (0.984 in.)
Front brake disc thickness 7A-FE	Minimum	23.0 mm (0.906 in.)
Front brake disc thickness 5S-FE	STD	28.0 mm (1.102 in.)
Front brake disc thickness 5S-FE	Minimum	26.0 mm (1.204 in.)
Front brake disc runout	Maximum	0.05 mm (0.0020 in.)
Rear brake drum inside diameter	STD	200.0 mm (7.874 in.)
Rear brake drum inside diameter	Maximum	201.0 mm (7.913 in.)
Rear brake shoe lining thickness	STD	4.0 mm (0.157 in.)
Rear brake shoe lining thickness	Maximum	1.0 mm (0.039 in.)
Parking brake adjusting shim thickness for rear drum brake		0.2 mm (0.008 in.) 0.3 mm (0.012 in.) 0.4 mm (0.016 in.) 0.5 mm (0.020 in.) 0.6 mm (0.024 in.) 0.9 mm (0.035 in.)
Rear brake drum to shoe clearance		0.6 mm (0.024 in.)
Rear brake pad thickness	STD	10.0 mm (0.394 in.)
Rear brake pad thickness	Minimum	1.0 mm (0.039 in.)
Rear brake disc thickness	STD	10.0 mm (0.394 in.)
Rear brake disc thickness	Minimum	9.0 mm (0.354 in.)
Rear brake disc runout	Maximum	0.15 mm (0.0059 in.)
Rear brake disc inside diameter	STD	170.0 mm (6.690 in.)
Rear brake disc inside diameter	Maximum	171.0 mm (6.732 in.)
Parking brake shoe lining thickness	STD	2.0 mm (0.079 in.)
Parking brake shoe lining thickness	Minimum	1.0 mm (0.039 in.)
Parking brake lever travel at 196N (20 Kgf, 44.1 lbf)		4 - 7 clicks
Rear brake clearance between rear shoe and lever		Less than 0.35 mm (0.0138 in.)
Parking brake adjusting shim thickness for rear disc brake		0.3 mm (0.012 in.) 0.6 mm (0.024 in.) 0.9 mm (0.035 in.)

MANUAL TRANSAXLE (C52)

SS1CX-01

SERVICE DATA

Input shaft roller bearing journal diameter	Min.	24.970 mm (0.9831 in.)
Input shaft 3rd gear journal diameter	Min.	30.970 mm (1.2193 in.)
Input shaft 4th gear journal diameter	Min.	28.970 mm (1.1405 in.)
Input shaft 5th gear journal diameter	Min.	24.870 mm (0.9791 in.)
Input shaft runout	Max.	0.05 mm (0.0020 in.)
Output shaft roller bearing journal diameter	Min.	32.970 mm (1.2980 in.)
Output shaft 1st gear journal diameter	Min.	37.970 mm (1.4949 in.)
Output shaft 2nd gear journal diameter	Min.	31.970 mm (1.2587 in.)
Output shaft runout	Max.	0.05 mm (0.0020 in.)
Gear thrust clearance 1st	STD	0.10 - 0.40 mm (0.0039 - 0.0157 in.)
	Max.	0.45 mm (0.0177 in.)
Gear thrust clearance 2nd	STD	0.10 - 0.45 mm (0.0039 - 0.0177 in.)
	Max.	0.50 mm (0.0197 in.)
Gear thrust clearance 3rd	STD	0.10 - 0.35 mm (0.0039 - 0.0138 in.)
	Max.	0.40 mm (0.0157 in.)
Gear thrust clearance 4th	STD	0.10 - 0.55 mm (0.0039 - 0.0217 in.)
	Max.	0.60 mm (0.0236 in.)
Gear thrust clearance 5th	STD	0.10 - 0.57 mm (0.0039 - 0.0244 in.)
	Max.	0.65 mm (0.0256 in.)
Gear radial clearance 1st, 2nd, 3rd, 4th and 5th	STD	0.015 - 0.058 mm (0.0006 - 0.0023 in.)
	Max.	0.070 mm (0.0028 in.)
Shift fork to hub sleeve clearance	Max.	1.0 mm (0.039 in.)
Synchronizer ring to gear clearance		0.6 mm (0.024 in.)
Drive in depth		
Control shaft cover oil seal		1.0 - 2.0 mm (0.039 - 0.079 in.)
Transmission case oil seal		2.4 ± 0.3 mm (0.094 ± 0.012 in.)
Transaxle case oil seal		2.4 ± 0.3 mm (0.094 ± 0.012 in.)
Select inner lever slotted spring pin		0 ± 0.5 mm (0 ± 0.020 in.)
No. 1 shift inner lever slotted spring pin		0 ± 0.5 mm (0 ± 0.020 in.)
No. 2 shift inner lever slotted spring pin		3.5 ± 0.5 mm (0.138 ± 0.020 in.)
Input shaft snap ring thickness		
No. 2 clutch hub	Mark 0	2.30 mm (0.0906 in.)
	Mark 1	2.36 mm (0.0929 in.)
	Mark 2	2.42 mm (0.0953 in.)
	Mark 3	2.48 mm (0.0976 in.)
	Mark 4	2.54 mm (0.1000 in.)
	Mark 5	2.60 mm (0.1024 in.)
Ring bearing	Mark A	2.29 mm (0.0902 in.)
	Mark B	2.35 mm (0.0925 in.)
	Mark C	2.41 mm (0.0949 in.)
	Mark D	2.47 mm (0.0972 in.)
	Mark E	2.53 mm (0.0996 in.)
	Mark F	2.59 mm (0.1020 in.)

Output shaft snap ring thickness		
No. 1 clutch hub	Mark A	2.50 mm (0.0984 in.)
	Mark B	2.56 mm (0.1008 in.)
	Mark C	2.62 mm (0.1031 in.)
	Mark D	2.68 mm (0.1055 in.)
	Mark E	2.74 mm (0.1079 in.)
	Mark F	2.80 mm (0.1102 in.)
No. 3 clutch hub	Mark A	2.25 mm (0.0886 in.)
	Mark B	2.31 mm (0.0909 in.)
	Mark C	2.37 mm (0.0933 in.)
	Mark D	2.43 mm (0.0957 in.)
	Mark E	2.49 mm (0.0980 in.)
	Mark F	2.55 mm (0.1004 in.)
	Mark G	2.61 mm (0.1028 in.)
Differential side bearing preload (at starting)(For use with SST)		
	New bearing	0.8 - 1.6 N·m (8 - 16 kgf·cm, 6.9 - 13.9 in.·lbf)
	Reused bearing	0.5 - 1.0 N·m (5 - 10 kgf·cm, 4.3 - 8.7 in.·lbf)
Differential pinion to side gear backlash		0.05 - 0.20 mm (0.0020 - 0.0079 in.)
Differential side gear thrust washer thickness		0.95 mm (0.0374 in.)
		1.00 mm (0.0394 in.)
		1.05 mm (0.0413 in.)
		1.10 mm (0.0433 in.)
		1.15 mm (0.0453 in.)
		1.20 mm (0.0472 in.)
Differential side bearing adjusting shim thickness		
	Mark A	2.10 mm (0.0827 in.)
	Mark B	2.15 mm (0.0846 in.)
	Mark C	2.20 mm (0.0866 in.)
	Mark D	2.25 mm (0.0886 in.)
	Mark E	2.30 mm (0.0906 in.)
	Mark F	2.35 mm (0.0925 in.)
	Mark G	2.40 mm (0.0945 in.)
	Mark H	2.45 mm (0.0965 in.)
	Mark J	2.50 mm (0.0984 in.)
	Mark K	2.55 mm (0.1004 in.)
	Mark L	2.60 mm (0.1024 in.)
	Mark M	2.65 mm (0.1043 in.)
	Mark N	2.70 mm (0.1063 in.)
	Mark P	2.75 mm (0.1083 in.)
	Mark Q	2.80 mm (0.1102 in.)
	Mark R	2.85 mm (0.1122 in.)
	Mark S	2.90 mm (0.1142 in.)
	Mark T	2.95 mm (0.1161 in.)
	Mark U	3.00 mm (0.1181 in.)

MANUAL TRANSAXLE (S54)

SS0LY-03

SERVICE DATA

Input shaft roller bearing journal diameter	Min.	29.970 mm (1.1799 in.)
Input shaft 3rd gear journal diameter	Min.	33.090 mm (1.3028 in.)
Input shaft 4th gear journal diameter	Min.	32.470 mm (1.2783 in.)
Input shaft 5th gear journal diameter	Min.	26.970 mm (1.0618 in.)
Input shaft runout	Max.	0.05 mm (0.0020 in.)
Output shaft roller bearing journal diameter	Min.	31.970 mm (1.2587 in.)
Output shaft 1st gear journal diameter	Min.	37.970 mm (1.4949 in.)
Output shaft 2nd gear journal diameter	Min.	31.990 mm (1.2594 in.)
Output shaft runout	Max.	0.05 mm (0.0020 in.)
Gear thrust clearance 1st	STD Max.	0.10-0.29 mm (0.0039-0.0114 in.) 0.35 mm (0.0138 in.)
Gear thrust clearance 2nd	STD Max.	0.20-0.44 mm (0.0079-0.0173 in.) 0.50 mm (0.0197 in.)
Gear thrust clearance 3rd	STD Max.	0.10-0.25 mm (0.0039-0.0098 in.) 0.30 mm (0.0118 in.)
Gear thrust clearance 4th	STD Max.	0.20-0.45 mm (0.0079-0.0177 in.) 0.50 mm (0.0197 in.)
Gear thrust clearance 5th	STD Max.	0.20-0.40 mm (0.0079-0.0157 in.) 0.45 mm (0.0177 in.)
Gear radial clearance 1st, 2nd, 3rd and 4th	STD Max.	0.009-0.053 mm (0.0004-0.0021 in.) 0.070 mm (0.0028 in.)
Gear radial clearance 5th	STD Max.	0.009-0.050 mm (0.0004-0.0020 in.) 0.070 mm (0.0028 in.)
Shift fork to hub sleeve clearance	Max.	1.0 mm (0.039 in.)
Synchronizer ring to gear clearance 1st, 3rd and 4th	Min.	0.6 mm (0.024 in.)
Synchronizer ring to gear clearance 2nd	Min.	0.7 mm (0.028 in.)
Differential case side bearing preload (at starting)(For use with SST)		0.8-1.6 N·m (8-16 kgf·cm, 6.9-13.9 in.·lbf)
Differential pinion to side gear backlash		0.05-0.20 mm (0.0020-0.0079 in.)
Drive in depth Input shaft front oil seal Reverse restrict pin slotted spring pin Shift and select lever shaft slotted spring pin		 0-0.5 mm (0-0.020 in.) 13.5 ± 0.5 mm (0.531 ± 0.020 in.) 23.5 ± 1.0 mm (0.925 ± 0.039 in.)
Differential side gear thrust washer thickness		 0.95 mm (0.0374 in.) 1.00 mm (0.0394 in.) 1.05 mm (0.0413 in.) 1.10 mm (0.0433 in.) 1.15 mm (0.0453 in.) 1.20 mm (0.0472 in.)

Input shaft snap ring thickness		
No.2 clutch hub	Mark 1	1.95-2.00 mm (0.0768-0.0787 in.)
	Mark 2	2.00-2.05 mm (0.0787-0.0807 in.)
	Mark 3	2.05-2.10 mm (0.0807-0.0827 in.)
	Mark 4	2.10-2.15 mm (0.0827-0.0846 in.)
	Mark 5	2.15-2.20 mm (0.0846-0.0866 in.)
	Mark 6	2.20-2.25 mm (0.0866-0.0886 in.)
No.3 clutch hub	Mark 13	2.20-2.25 mm (0.0866-0.0886 in.)
	Mark 14	2.25-2.30 mm (0.0886-0.0906 in.)
	Mark 15	2.30-2.35 mm (0.0906-0.0925 in.)
	Mark 16	2.35-2.40 mm (0.0925-0.0945 in.)
	Mark 17	2.40-2.45 mm (0.0945-0.0965 in.)
	Mark 18	2.45-2.50 mm (0.0965-0.0984 in.)
	Mark 19	2.50-2.55 mm (0.0984-0.1004 in.)
	Mark 20	2.55-2.60 mm (0.1004-0.1024 in.)
	Mark 21	2.60-2.65 mm (0.1024-0.1043 in.)
	Mark 22	2.65-2.70 mm (0.1043-0.1063 in.)
	Mark 23	2.70-2.75 mm (0.1063-0.1083 in.)
	Mark 24	2.75-2.80 mm (0.1083-0.1102 in.)
	Mark 25	2.80-2.85 mm (0.1102-0.1122 in.)
	Mark 26	2.85-2.90 mm (0.1122-0.1142 in.)
	Mark 27	2.90-2.95 mm (0.1142-0.1161 in.)
Rear bearing	Mark A	2.15-2.20 mm (0.0846-0.0866 in.)
	Mark B	2.20-2.25 mm (0.0866-0.0886 in.)
	Mark C	2.25-2.30 mm (0.0886-0.0906 in.)
	Mark D	2.30-2.35 mm (0.0906-0.0925 in.)
	Mark E	2.35-2.40 mm (0.0925-0.0945 in.)
Differential side bearing adjusting shim thickness		
	Mark 1	1.90 mm (0.0748 in.)
	Mark 2	1.95 mm (0.0768 in.)
	Mark 3	2.00 mm (0.0787 in.)
	Mark 4	2.05 mm (0.0807 in.)
	Mark 5	2.10 mm (0.0827 in.)
	Mark 6	2.15 mm (0.0846 in.)
	Mark 7	2.20 mm (0.0866 in.)
	Mark 8	2.25 mm (0.0886 in.)
	Mark 9	2.30 mm (0.0906 in.)
	Mark 10	2.35 mm (0.0925 in.)
	Mark 11	2.40 mm (0.0945 in.)
	Mark 12	2.45 mm (0.0965 in.)
	Mark 13	2.50 mm (0.0984 in.)
	Mark 14	2.55 mm (0.1004 in.)
	Mark 15	2.60 mm (0.1024 in.)
	Mark 16	2.65 mm (0.1043 in.)
	Mark 17	2.70 mm (0.1063 in.)
	Mark 18	2.75 mm (0.1083 in.)
	Mark 19	2.80 mm (0.1102 in.)

CLUTCH

SERVICE DATA

SS0LW-01

Pedal height from asphalt sheet		144.9 - 154.9 mm (5.705 - 6.098 in.)
Pedal freeplay		1.0 - 5.0 mm (0.039 - 0.197 in.)
Push rod play at pedal top		5.0 - 15.0 mm (0.197 - 0.591 in.)
Clutch release point from pedal full stroke end position		25 mm (0.98 in.) or more
Disc rivet head depth	Min.	0.3 mm (0.012 in.)
Disc runout	Max.	0.8 mm (0.031 in.)
Flywheel runout	Max.	0.1 mm (0.004 in.)
Diaphragm spring finger wear	Max. depth	0.5 mm (0.020 in.)
Diaphragm spring finger wear	Max. width	6.0 mm (0.236 in.)
Diaphragm spring tip non-alignment	Max.	0.5 mm (0.020 in.)

SS1CU-02

TORQUE SPECIFICATION

Part tightened	N·m	kgf·cm	ft·lbf
End cover x Brush holder	1.5	15	13 in.·lbf
Starter housing x Magnetic switch	5.9	60	52 in.·lbf
End cover x Starter Housing	5.9	60	52 in.·lbf
Lead wire of field frame x Magnetic switch	7.9	80	70 in.·lbf
Terminal nut x Terminal C of starter, Terminal 30 of starter	17	170	12
Magnetic switch end cover x Magnetic switch	2.5	26	23 in.·lbf
Starter x Transaxle	39	400	29
Starter wire x Terminal 30 of starter	7.9	80	70 in.·lbf

SS00G-01

SPECIFIED TORQUE FOR STANDARD BOLTS

Class	Diameter mm	Pitch mm	Specified torque						
			Hexagon head bolt			Hexagon flange bolt			
			N·m	kgf·cm	ft·lbf	N·m	kgf·cm	ft·lbf	
4T	6	1	5	55	48 in.·lbf	6	60	52 in.·lbf	
	8	1.25	12.5	130	9	14	145	10	
	10	1.25	26	260	19	29	290	21	
	12	1.25	47	480	35	53	540	39	
	14	1.5	74	760	55	84	850	61	
	16	1.5	115	1,150	83	—	—	—	
5T	6	1	6.5	65	56 in.·lbf	7.5	75	65 in.·lbf	
	8	1.25	15.5	160	12	17.5	175	13	
	10	1.25	32	330	24	36	360	26	
	12	1.25	59	600	43	65	670	48	
	14	1.5	91	930	67	100	1,050	76	
	16	1.5	140	1,400	101	—	—	—	
6T	6	1	8	80	69 in.·lbf	9	90	78 in.·lbf	
	8	1.25	19	195	14	21	210	15	
	10	1.25	39	400	29	44	440	32	
	12	1.25	71	730	53	80	810	59	
	14	1.5	110	1,100	80	125	1,250	90	
	16	1.5	170	1,750	127	—	—	—	
7T	6	1	10.5	110	8	12	120	9	
	8	1.25	25	260	19	28	290	21	
	10	1.25	52	530	38	58	590	43	
	12	1.25	95	970	70	105	1,050	76	
	14	1.5	145	1,500	108	165	1,700	123	
	16	1.5	230	2,300	166	—	—	—	
8T	8	1.25	29	300	22	33	330	24	
	10	1.25	61	620	45	68	690	50	
	12	1.25	110	1,100	80	120	1,250	90	
9T	8	1.25	34	340	25	37	380	27	
	10	1.25	70	710	51	78	790	57	
	12	1.25	125	1,300	94	140	1,450	105	
10T	8	1.25	38	390	28	42	430	31	
	10	1.25	78	800	58	88	890	64	
	12	1.25	140	1,450	105	155	1,600	116	
11T	8	1.25	42	430	31	47	480	35	
	10	1.25	87	890	64	97	990	72	
	12	1.25	155	1,600	116	175	1,800	130	

V00079

STARTING (5S-FE)

SS0MU-06

SERVICE DATA

Starter	Rated voltage and output power		12 V 1.4 kW
	No-load characteristics	Current	90 A or less at 11.5 V
		rpm	3,000 rpm or more
	Brush length	STD	15.0 mm (0.591 in.)
		Minimum	8.0 mm (0.315 in.)
	Spring installed load	STD	17.6 - 23.5 N (1.8 - 2.4 kgf, 4.0 - 5.3 lbf)
		Minimum	11.8 N (1.2 kgf, 2.6 lbf)
	Commutator		
	Diameter	STD	30.0 mm (1.181 in.)
		Minimum	29.0 mm (1.412 in.)
	Undercut depth	STD	0.6 mm (0.024 in.)
		Minimum	0.2 mm (0.008 in.)
	Circle runout	Maximum	0.05 mm (0.0020 in.)
	Magnetic switch		
	Contact plate for wear	Maximum	0.9 mm (0.035 in.)

DI51N-02

TERMINALS OF ECM

ECM Terminals

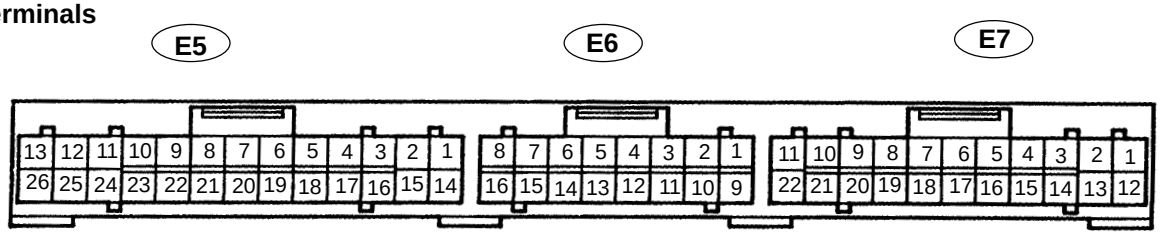

P19559

Symbols (Terminals No.)	Wiring Color	Condition	STD Voltage (V)
BATT (E7 - 1) - E1 (E5 - 14)	P ↔ BR	Always	9 - 14
+ B (E7 - 12) - E1 (E5 - 14)	B - R ↔ BR	IG switch ON	9 - 14
VC (E6 - 1) - E2 (E6 - 9)	R ↔ BR	IG switch ON	4.5 - 5.5
VTA (E6 - 11) - E2 (E6 - 9)	B - W ↔ BR	IG switch ON Throttle valve fully closed	0.3 - 1.0
		IG switch ON Throttle valve fully open	3.2 - 4.9
PIM (E6 - 2) - E2 (E6 - 9)	L ↔ BR	IG switch ON	3.3 - 3.9
		Apply vacuum 26.7 kPa (200 mmHg, 7.9 in.Hg)	2.5 - 3.1
THA (E6 - 3) - E2 (E6 - 9)	L-R ↔ BR	Idling, Intake air temp. 20˚C (68˚ F)	0.5 - 3.4
THW (E6 - 4) - E2 (E6 - 9)	G ↔ BR	Idling, Engine coolant temp. 80˚C (176˚F)	0.2 - 1.0
STA (E7 - 11) - E1 (E5 - 14)	B ↔ BR	Cranking	6.0 or more
#10 (E5 - 12) - E01 (E5 - 13) #20 (E5 - 11) - E01 (E5 - 13) #30 (E5 - 25) - E01 (E5 - 13) #40 (E5 - 24) - E01 (E5 - 13)	L ↔ W-B B-W ↔ W-B B-R ↔ W-B B-R ↔ W-B	IG switch ON	9 - 14
		Idling	Pulse generation (See page DI-160)
IGT (E5 - 20) - E1 (E5 - 14)	W ↔ BR	Idling	Pulse generation (See page DI-190)
IGF (E5 - 3) - E1 (E5 - 14)	B-Y ↔ BR	IG switch ON, Disconnect igniter coil connector	4.5 - 5.5
		Idling	Pulse generation (See page DI-190)
G (E5 - 5) - NE⊖(E5 - 17)	B ↔ W	Idling	Pulse generation (See page DI-196)
NE (E5 - 4) - NE⊖(E5 - 17)	O ↔ W	Idling	Pulse generation (See page DI-196)
FC (E7 - 14) - E1 (E5 - 14)	G - R ↔ BR	IG switch ON	9 - 14
EGR (E5 - 23) - E1(E5 - 14)	L - B ↔ BR	IG switch ON	9 - 14
ISCC (E5 - 9) - E1 (E5 - 14)	G-W ↔ BR	IG switch ON	0 - 3.0
ISCO (E5 -10) - E1(E5 - 14)	B-W ↔ BR	IG switch ON	9 - 14
OX1 (E6 - 6) - E1 (E5 - 14) OX2 (E6 - 5) - E1 (E5 - 14)	W ↔ BR	Maintain engine speed at 2,500 rpm for 2 min. after warming up	Pulse generation (See page DI-182)
KNK (E6 - 13) - E1 (E5 - 14)	W ↔ BR	Idling	Pulse generation (See page DI-165)

Symbols (Terminals No.)	Wiring Color	Condition	STD Voltage (V)
*NSW (E7 - 22) - E1 (E5 - 14)	B - Y ↔ BR	IG switch ON Other shift position in "P" ,"N" position	9 - 14
		IG switch ON Shift position in "P" ,"N" position	0 - 3.0
SPD (E7 - 9) - E1 (E5 - 14)	O ↔ BR	IG switch ON Rotate driver wheel slowly	Pulse generation (See page DI-185)
TE1 (E6 - 15) - E1 (E5 - 14)	Y ↔ BR	IG switch ON	9 - 14
W (E7 - 5) - E1 (E5 - 14)	R-B ↔ BR	Idling	9 - 14
		IG switch ON	Below 3.0
AC1 (E7 - 10) - E1 (E5 - 14)	L-B ↔ BR	Idling, A/C switch ON	Below 2.0
		Idling, A/C switch OFF	4 - 6
ACT (E7 - 21) - E1 (E5 - 14)	G-Y ↔ BR	Idling, A/C switch ON	9 - 14
		Idling, A/C switch OFF	Below 2.0
*OD2 (E7 - 7) - E1 (E5 - 14)	GR-L ↔ BR	IG switch ON, O/D main switch pushed out	9 - 14
		IG switch ON, O/D main switch pushed in	0 - 3.0
*OD1 (E7 - 20) - E1 (E5 - 14)	P ↔ BR	IG switch ON, Cruise control ECU no request O/D cut	9 - 14
		IG switch ON, Cruise control ECU request O/D cut	0 - 3.0
ELS (E7 - 2) - E1 (E5 - 14)	O ↔ BR	Defogger switch or taillight switch ON	7.5 - 14
		Defogger switch and taillight switch OFF	0 - 1.5
SDL (E7 - 16) - E1 (E5 - 14)	W ↔ BR	During transmission	Pulse generation

*: A/T only

DI50K-02

TERMINALS OF ECM

ECM Terminals

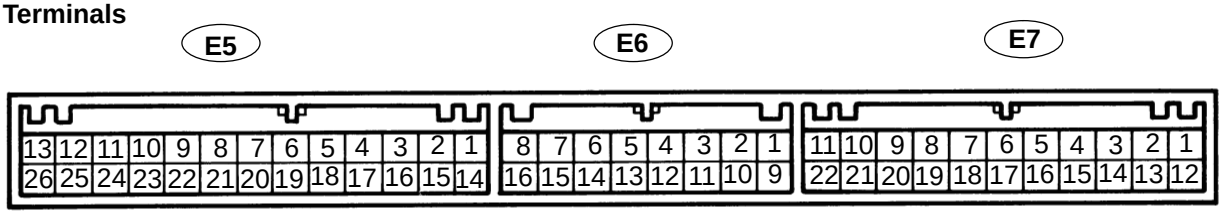

FI2796

Symbols (Terminals No.)	Wiring Color	Condition	STD Voltage (V)
BATT (E7 - 1) - E1 (E5 - 14)	P ↔ BR	Always	9 - 14
+ B (E7 - 12) - E1 (E5 - 14)	B - R ↔ BR	IG switch ON	9 - 14
VC (E6 - 1) - E2 (E6 - 9)	R ↔ BR	IG switch ON	4.5 - 5.5
VTA (E6 - 11) - E2 (E6 - 9)	B - W ↔ BR	IG switch ON Throttle valve fully closed	0.3 - 1.0
		IG switch ON Throttle valve fully open	3.2 - 4.9
PIM (E6 - 2) - E2 (E6 - 9)	L ↔ BR	IG switch ON	3.3 - 3.9
		Apply vacuum 26.7 kPa (200 mmHg, 7.9 in.Hg)	2.5 - 3.1
THA (E6 - 3) - E2 (E6 - 9)	L - R ↔ BR	Idling, Intake air temp. 20˚C (68˚ F)	0.5 - 3.4
THW (E6 - 4) - E2 (E6 - 9)	G ↔ BR	Idling, Engine coolant temp. 80˚C (176˚F)	0.2 - 1.0
#10 (E5 - 12) - E01 (E5 - 13)	B - W ↔ BR	IG switch ON	9 - 14
		Idling	Pulse generation (See page DI-53)
#20 (E5 - 11) - E01 (E5 - 13)	B - R ↔ BR	IG switch ON	9 - 14
		Idling	Pulse generation (See page DI-53)
#30 (E5 - 25) - E01 (E5 - 13)	B - W ↔ BR	IG switch ON	9 - 14
		Idling	Pulse generation (See page DI-53)
#40 (E5 - 24) - E01 (E5 - 13)	B - R ↔ BR	IG switch ON	9 - 14
		Idling	Pulse generation (See page DI-53)
IGT (E5 - 20) - E1 (E5 - 14)	W ↔ BR	Idling	Pulse generation (See page DI-83)
IGF (E5 - 3) - E1 (E5 - 14)	B - Y ↔ BR	IG switch ON, Disconnect ignition coil connector	4.5 - 5.5
		Idling	Pulse generation (See page DI-83)
G2 (E5 - 5) - NE⊖(E5 - 17)	B ↔ W	Idling	Pulse generation (See page DI-61)
NE (E5 - 4) - NE⊖(E5 - 17)	O ↔ W	Idling	Pulse generation (See page DI-61)
HT2 (E5 - 19) - E03 (E6 - 16)	P ↔ BR	Idling	Below 3.0
		IG switch ON	9 - 14
RSC (E5 - 9) - E01 (E5 - 13)	G - W ↔ BR	IG switch ON	9 - 14

Symbols (Terminals No.)	Wiring Color	Condition	STD Voltage (V)
RSO (E5 -10) - E01 (E5 - 13)	B - W ↔ BR	IG switch ON	9 - 14
OX1 (E6 - 6) - E1 (E5 - 14)	W ↔ BR	Maintain engine speed at 2,500 rpm for 2 min. after warming up	Pulse generation (See page DI-75)
OX2 (E6 - 5) - E1 (E5 - 14)	W ↔ BR	Maintain engine speed at 2,500 rpm for 2 min. after warming up	Pulse generation (See page DI-75)
EGR (E5 - 23) - E01(E5 - 13)	L - B ↔ BR	IG switch ON	9 - 14
KNK (E6 - 13) - E2 (E6 - 9)	W ↔ BR	Idling	Pulse generation (See page DI-58)
ELS2 (E7 - 3) - E1 (E5 - 14)	B ↔ BR	Defogger switch OFF	Below 3.0
		Defogger switch ON	9 - 14
*NSW (E7 - 22) - E1 (E5 - 14)	B - Y ↔ BR	IG switch ON Other shift position in ”P” ,”N” position	9 - 14
		IG switch ON Shift position in ”P” ,”N” position	0 - 3.0
SPD (E7 - 9) - E1 (E5 - 14)	O ↔ BR	IG switch ON Rotate driving wheel slowly	Pulse generation (See page DI-78)
TE1 (E6 - 15) - E1 (E5 - 14)	Y ↔ BR	IG switch ON	9 - 14
W (E7 - 5) - E01 (E5 - 13)	R - B ↔ BR	Idling	9 - 14
		IG switch ON	Below 3.0
*OD1 (E7 - 20) - E1 (E5 - 14)	P ↔ BR	IG switch ON	9 - 14
*OD2 (E7 - 7) - E1 (E7 - 13)	GR - L ↔ BR	IG switch ON O/D main switch pushed in	9 - 14
		IG switch ON O/D main switch pushed out	Below 3.0
AC1 (E7 - 10) - E1 (E5 - 14)	L - B ↔ BR	Idling, A/C switch ON	Below 1.5
		Idling, A/C switch OFF	7.5 - 14
ACT (E7 - 21) - E1 (E5 - 14)	G -Y ↔ BR	Idling, A/C switch ON	7.5 - 14
		Idling, A/C switch OFF	Below 1.5
STA (E7 - 11) - E1 (E5 - 14)	B ↔ BR	Cranking	6.0 or more
FC (E7 - 14) - E01 (E5 - 13)	G - R ↔ BR	IG switch ON	9 - 14
		Idling	0 - 3.0
ELS1 (E7 - 2) - E1 (E5 - 14)	O ↔ BR	Defogger switch and light switch ON	9 - 14
		Defogger switch and light switch OFF	Below 3.0

*: Only for A/T models.

DI52O-02

TERMINALS OF ECM

ECM Terminals

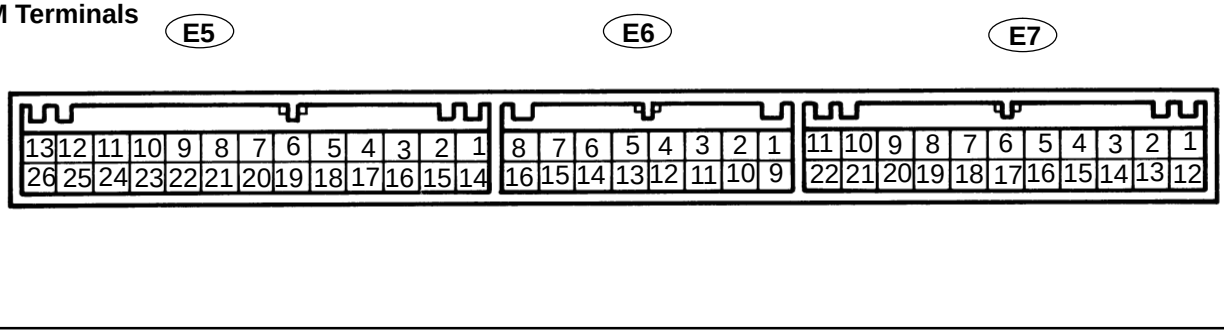

FI2796

Symbols (Terminals No.)	Wiring Color	Condition	STD Voltage (V)
SPD ↔ E1 (E7-9 ↔ E5-14)	O ↔ BR	IG ON and Turn one front wheel slowly (Disconnect cruise control connector.)	Pulse signal is out put Below 1.5V ↔ 4 - 6 V
S1 ↔ E1 (E5-2 ↔ E5-14)	V ↔ BR	IG OFF and disconnect ECM connector	11 - 15 Ω
		IG ON	9 - 14
		1st or 2nd gear	9 - 14
		3rd or O/D gear	Below 1.5
S2 ↔ E1 (E5-15 ↔ E5-14)	BR-Y ↔ BR	IG OFF and disconnect ECM connector	11 - 15 Ω
		IG ON	Below 1.5
		2nd or 3rd gear	9 - 14
		1st or O/D gear	Below 1 .5
SL ↔ E1 (E5-1 ↔ E5-14)	Y-B ↔ BR	IG OFF and disconnect ECM connector	11 - 15 Ω
		IG ON	Below 1.5
		Vehicle driving under lock-up position	9 - 14
OD1 ↔ E1 (E7-20 ↔ E5-14)	P ↔ BR	IG ON	9 - 14
OD2 ↔ E1 (E7-7 ↔ E5-14)	GR-L ↔ BR	O/D main switch ON (O/D ON)	9 - 14
		O/D main switch OFF(O/D OFF)	Below 3
L ↔ E1 (E7-19 ↔ E5-14)	Y-R ↔ BR	IG ON and Shift lever L position	7.5 - 14
		IG ON and Shift lever other than L position	Below 1.5
2 ↔ E1 (E7-18 ↔ E5-14)	Y-G ↔ BR	IG ON and Shift lever 2 position	7.5 - 14
		IG ON and Shift lever other than 2 position	Below 1.5
R ↔ E1 (E7-17 - E5-14)	R-W ↔ BR	IG ON and Shift lever R position	7.5 - 14
		IG ON and Shift lever other than R position	Below 1.5
NSW ↔ E1 (E7-22 ↔ E5-14)	B-Y ↔ BR	IG ON and Shift lever P or N position	Below 3
		IG ON and Shift lever other than P and N position	9 - 14
B/K ↔ E1 (E7-4 ↔ E5-14)	G-W ↔ BR	IG ON and Brake pedal is depressed	7.5 - 14
		IG ON and Brake pedal is released	Below 1.5

DI534-03

TERMINALS OF ECM

ECM Terminals

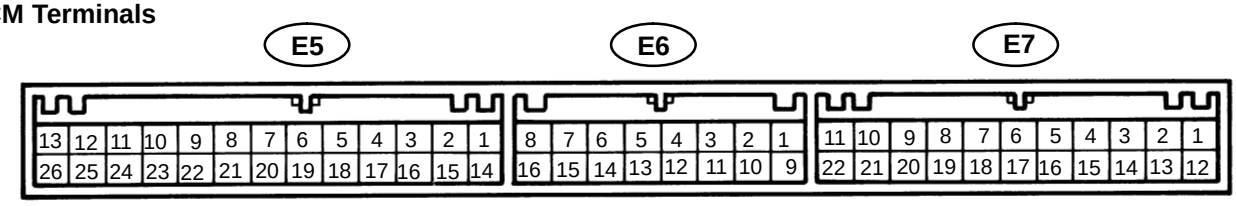

FI2796

D00170

Symbols (Terminals No.)	Wiring Color	Condition	STD Voltage (V)
SPD ↔ E1 (E7-9 ↔ E5-14)	O ↔ BR	IG ON and turn one front wheel slowly (Disconnect cruise control connector)	Pulse signal is output Below 1.5 V ↔ 4-6 V
S1 ↔ E1 (E5-2 ↔ E5-14)	V ↔ BR	IG ON	9 - 14
		IG OFF and disconnect ECM connector	11 - 15 Ω
		1st or 2nd gear	9 - 14
		3rd or O/D gear	Below 1.5
S2 ↔ E1 (E5-15 ↔ E5-14)	BR-Y ↔ BR	IG OFF and disconnect ECM connector	11 - 15 Ω
		IG ON	Below 1.5
		2nd or 3rd gear	9 - 14
		1st or O/D gear	Below 1.5
SL ↔ E1 (E5-1 ↔ E5-14)	Y-B ↔ BR	IG OFF and disconnect ECM connector	11 - 15 Ω
		IG ON	Below 1.5
		Vehicle driving under lock-up position	9 - 14
OD1 ↔ E1 (E7-20 ↔ E5-14)	P ↔ BR	IG ON	9 - 14
OD2 ↔ E1 (E7-7 ↔ E5-14)	GR-L ↔ BR	O/D main switch ON (O/D ON)	9 - 14
		O/D main switch OFF (O/D OFF)	Below 3
L ↔ E1 (E7-19 ↔ E5-14)	Y-R ↔ BR	IG ON and shift lever L position	7.5 - 14
		IG ON and shift lever other than L position	Below 1.5
R ↔ E1 (E7-17 ↔ E5-14)	R-W ↔ BR	IG ON and shift lever R position	7.5 - 14
		IG ON and shift lever other than R position	Below 1.5
2 ↔ E1 (E7-18 ↔ E5-14)	Y-G ↔ BR	IG ON and shift lever 2 position	7.5 - 14
		IG ON and shift lever other than 2 position	Below 1.5
NSW ↔ E1 (E7-22 ↔ E5-14)	B-Y ↔ BR	IG ON and shift lever P or N position	Below 3
		IG ON and shift lever other than P and N position	9 - 14
B/K ↔ E1 (E7-4 ↔ E5-14)	G-W ↔ BR	IG ON and brake pedal is depressed	7.5 - 14
		IG ON and brake pedal is released	Below 1.5

DI543-01

TERMINALS OF ECM

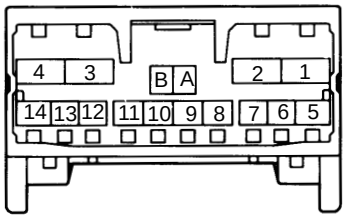

R05552

No.	Symbol	Terminal Name
A	-	Electrical Connection Check Mechanism
B	-	Electrical Connection Check Mechanism
1	P^-	Squib ⊖ (Passenger)
2	P^+	Squib ⊕ (Passenger)
3	D^+	Squib ⊕ (Driver)
4	D^-	Squib ⊖ (Driver)
5	E_1	Ground
6	E_2	Ground
7	Tc	Diagnosis
8	+SR	Front Airbag Sensor RH ⊕
9	-SR	Front Airbag Sensor RH ⊖
10	-SL	Front Airbag Sensor LH ⊖
11	+SL	Front Airbag Sensor LH ⊕
12	LA	SRS Warning Light
13	IG_2	Power Source (IGN Fuse)
14	ACC	Power Source (CIG Fuse)

DI54N-01

TERMINALS OF ECM

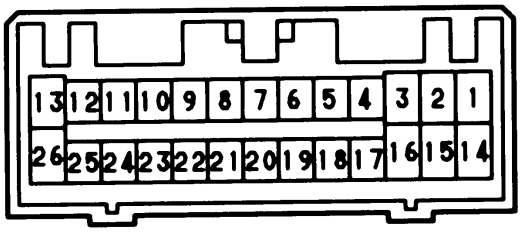

CRUISE Control ECU

I10242

Symbols (Terminals No.)	Wiring Color	Condition	STD Voltage (V)
D ↔ GND (2 ↔ 13)	B-W ↔ BR	(M/T) Depress Clutch Pedal (A/T) Shift to except D position	Below 1 V
		(M/T) Release Clutch Pedal (A/T) Shift to D position	10 - 16 V
PI ↔ GND (7 ↔ 13)	G-Y ↔ BR	IG ON. Main switch ON Main indicator light ON	Below 1.2 V
		IG ON. Main switch OFF Main indicator light OFF	10 - 16 V
TC ↔ GND (8 ↔ 13)	B-Y ↔ BR	Ignition switch ON	10 - 16 V
OD ↔ GND (9 ↔ 13)	G-O ↔ BR	Except during cruise control driving	10 - 16 V
		O/D switch ON During cruise control driving (Driving on flat road)	10 - 16 V
OD ↔ GND (9 ↔ 13)	G-O ↔ BR	O/D switch OFF During cruise control driving (3rd driving)	Below 1 V
L ↔ GND (10 ↔ 13)	R ↔ BR	During cruise control driving	9 - 15 V
		Except during cruise control driving	Below 1 V
MC ↔ GND (11 ↔ 13)	L-R ↔ BR	During cruise control driving COAST switch hold ON	9 - 16 V
		During cruise control driving ACCEL switch hold ON	Below 1 V
MO ↔ GND (12 ↔ 13)	L ↔ BR	During cruise control driving ACCEL switch hold ON	9 - 15 V
		During cruise control driving COAST switch hold ON	Below 1 V
GND ↔ Body Ground (13 ↔ Body Ground)	BR ↔ Body Ground	Always	Below 1 V
B ↔ GND (14 ↔ 13)	B-W ↔ BR	Ignition switch ON	10 - 16 V
BATT ↔ GND (15 ↔ 13)	B-R ↔ BR	Always	10 - 16 V
STP- ↔ GND (16 ↔ 13)	G-W ↔ BR	Depress brake pedal	10 - 16 V
		Release brake pedal	Below 1 V

Symbols (Terminals No.)	Wiring Color	Condition	STD Voltage (V)
CCS ↔ GND (18 ↔ 13)	B-G ↔ BR	IG ON. Main switch ON Switch neutral position	10 - 16 V
		IG ON. Main switch ON CANCEL switch hold ON	5.1 - 8.3 V
		IG ON. Main switch ON SET/COAST switch hold ON	2.4 - 4.0 V
		IG ON. Main switch ON RESUME/ACCEL switch hold ON	0.8 - 1.4 V
CMS ↔ GND (19 ↔ 13)	Y-R ↔ BR	IG ON. Main switch hold ON (Indicator light ON)	Below 1 V
		IG ON. Main switch OFF (Indicator light OFF)	10 - 16 V
SPD ↔ GND (20 ↔ 13)	L-W ↔ BR	Engine start. Car stationary	4.7 - 5.2 V
		During driving (Pulse generated)	3 - 7 V
IDL ↔ GND (21 ↔ 13)	G-W ↔ BR	IG ON. Throttle valve fully opened	Below 1 V
		IG ON. Throttle valve fully closed	10 - 16 V
ECT ↔ GND (22 ↔ 13)	G-R ↔ BR	During cruise control driving O/D switch ON	Below 1 V
		During cruise control driving O/D switch OFF (3rd driving)	10 - 16 V
VR1 ↔ GND (23 ↔ 13)	Y ↔ BR	Ignition switch ON	4.7 - 5.2 V
VR2 ↔ VR3 (24 ↔ 25)	Y-G ↔ Y-L	During cruise control driving	1.0 - 4.7 V
		IG ON. Control plate fully opened	4.2 - 4.7 V
		IG ON. Control plate fully closed	1.0 - 1.2 V
VR3 ↔ GND (25 ↔ 13)	Y-L ↔ BR	Always	Below 1 V
L- ↔ GND (26 ↔ 13)	↔ BR	Always	Below 1 V

DI7HP-02

TERMINALS OF ECU

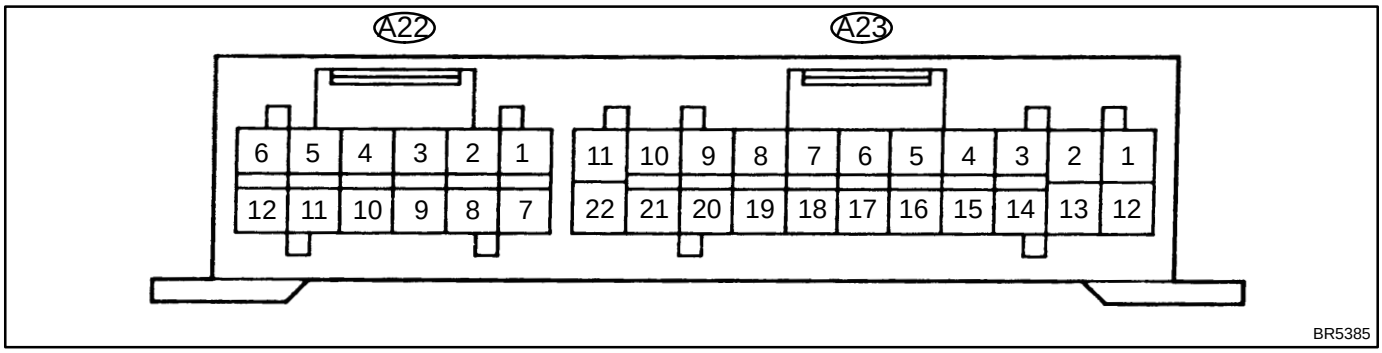

Symbols (Terminals No.)	STD Voltage (V)	Condition
IG1(A22 - 2) - GND (A23 - 2)	10 - 14	IG switch ON
R+ (A23 - 8) - SR (A23 - 18)	Below 1.5	IG switch ON
R+ (A23 - 8) - MR (A23 - 7)	10 - 14	IG switch ON
SFRR (A23 - 1) - GND (A23 - 2)	10 - 14	IG switch ON, ABS warning light OFF
SFRH (A23 - 4) - GND (A23 - 2)	10 - 14	IG switch ON, ABS warning light OFF
SFLR (A23 - 11) - GND (A23 - 2)	10 - 14	IG switch ON, ABS warning light OFF
SFLH (A23 - 10) - GND (A23 - 2)	10 - 14	IG switch ON, ABS warning light OFF
SRRR (A23 - 22) - GND (A23 - 2)	10 - 14	IG switch ON, ABS warning light OFF
SRRH (A23 - 21) - GND (A23 - 2)	10 - 14	IG switch ON, ABS warning light OFF
SRLR (A23 - 12) - GND (A23 - 2)	10 - 14	IG switch ON, ABS warning light OFF
SRLH (A23 - 5) - GND (A23 - 2)	10 - 14	IG switch ON, ABS warning light OFF
AST (A23 - 16) - GND (A23 - 2)	10 - 14	IG switch ON, ABS warning light OFF
WA (A22 - 4) - GND (A23 - 2)	Below 2.0	IG switch ON, ABS warning light ON
	10 - 14	IG switch ON, ABS warning light OFF
STP (A22 - 12) - GND (A23 - 2)	Below 1.5	Stop light switch OFF
	8 - 14	Stop light switch ON
Tc (A22 - 9) - GND (A23 - 2)	10 - 14	IG switch ON
Ts (A22 - 8) - GND (A23 - 2)	10 - 14	IG switch ON
FR+ (A23 - 3) - FR- (A23 - 14)	AC generation	IG switch ON Slowly turn right front wheel
FL+ (A23 - 19) - FL- (A23 - 20)	AC generation	IG switch ON Slowly turn left front wheel
RR+ (A22 - 1) - RR- (A22 - 7)	AC generation	IG switch ON Slowly turn right rear wheel
RL+ (A22 - 3) - RL- (A22 - 10)	AC generation	IG switch ON Slowly turn left rear wheel

ST07V-02

TEST

NOTICE:

These tests must be done within 3 to 5 seconds to avoid burning out the coil.

1. DO PULL-IN TEST

(a) Disconnect the field coil lead wire from terminal C.

(b) Connect the battery to the magnetic switch as shown. Check that the clutch pinion gear moves outward.

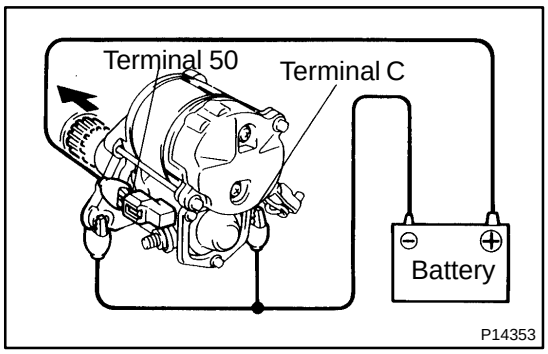

2. DO HOLD-IN TEST

With battery connected as above with the clutch pinion gear out, disconnect the negative (-) lead from terminal C. Check that the pinion gear remains out.

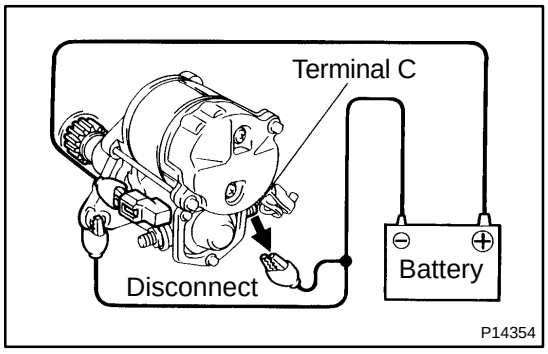

3. INSPECT CLUTCH PINION GEAR RETURN

(a) Disconnect the negative (-) lead from the switch body.

(b) Check that the clutch pinion gear returns inward.

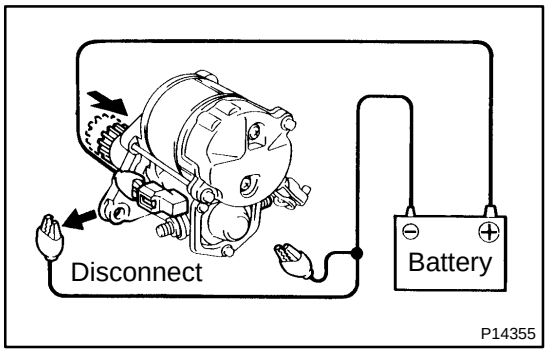

4. DO NO-LOAD PERFORMANCE TEST

(a) Connect the battery and ammeter to the starter as shown.

(b) Check that the starter rotates smoothly and steadily with the pinion gear moving out. Check that the ammeter shows the specified current.

Specified current:

90 A or less at 11.5 V

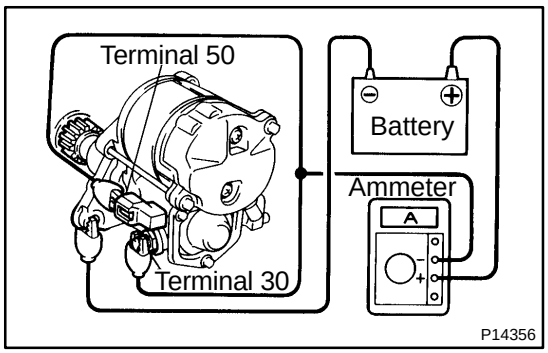

ST0K1-01

TEST

NOTICE:

These tests must be done within 3 to 5 seconds to avoid burning out the coil.

1. DO PULL-IN TEST

(a) Disconnect the field coil lead wire from terminal C.

(b) Connect the battery to the magnetic switch as shown. Check that the clutch pinion gear moves outward.

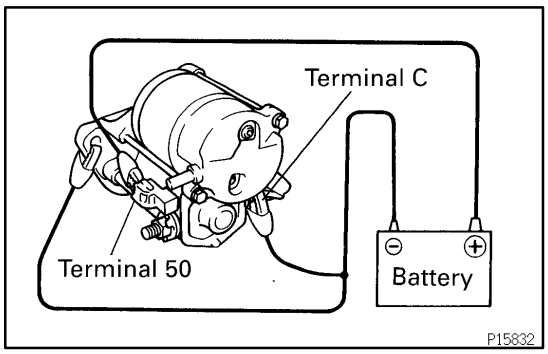

2. DO HOLD-IN TEST

With battery connected as above with the clutch pinion gear out, disconnect the negative (-) lead from terminal C.
Check that the pinion gear remains out.

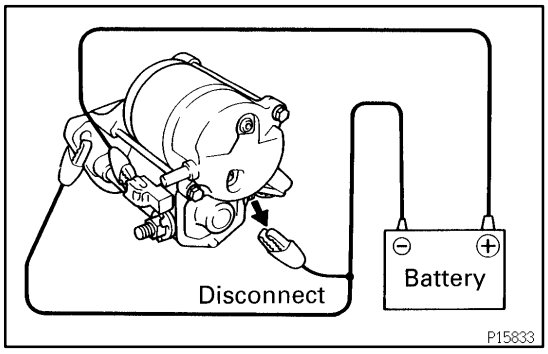

3. INSPECT CLUTCH PINION GEAR RETURN

Disconnect the negative (-) lead from the switch body.
Check that the clutch pinion gear returns inward.

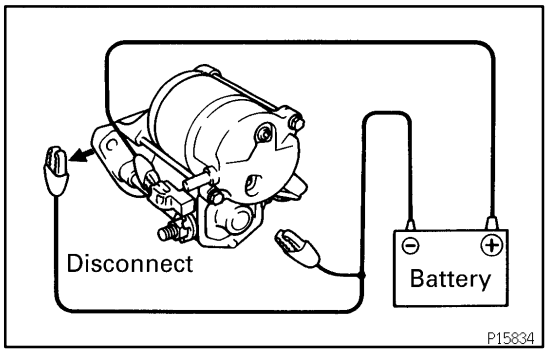

4. DO NO-LOAD PERFORMANCE TEST

(a) Connect the battery and ammeter to the starter as shown.

(b) Check that the starter rotates smoothly and steadily with the pinion gear moving out.
Check that the ammeter shows the specified current.
Specified current:
At 11.5 V 90 A or less

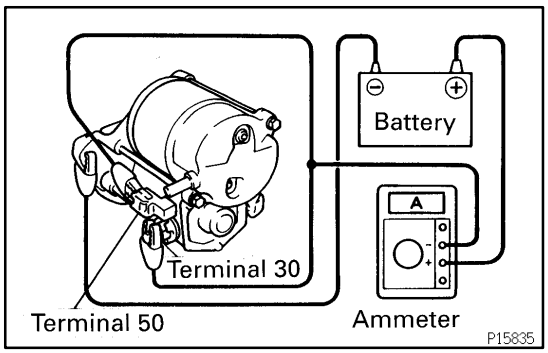

SS1CO-01

TORQUE SPECIFICATION

Part tightened	N·m	kgf·cm	ft·lbf
Cylinder block x Drain plug	29	300	22
Water pump x Cylinder block	14	145	10
No.2 water inlet x Cylinder head	15	150	11
Oil dipstick guide x No.2 water inlet	9.3	95	82 in.·lbf
Front engine mounting insulator x Engine mounting center member	80	815	59
Water inlet x Water inlet housing	9.3	95	82 in.·lbf
Oil cooler (Radiator) x Lower tank	8.3	85	74 in.·lbf
Radiator support x Body	12.5	130	9
Radiator pipe x Lower tank	14.7	150	11
No.1 cooling fan x Radiator	5.0	50	43 in.·lbf
No.2 cooling fan x Radiator	5.0	50	43 in.·lbf

SS0LZ-06

TORQUE SPECIFICATION

Part tightened		N·m	kgf·cm	ft·lbf
Valve body x Transaxle case		10	100	7
Oil pan		4.9	50	43 in.·lbf
Oil pan drain plug		49	500	36
Detent spring		10	100	7
Oil strainer		10	100	7
Apply pipe bracket		10	100	7
Control shaft lever x Shift control cable		13	135	10
Vehicle speed sensor		16	160	12
Transaxle case x Ground cable		19	195	14
Starter		39	400	29
Front lower sub - frame x Exhaust pipe stay		19	195	14
Front exhaust pipe x Exhaust pipe stay		25	250	18
Engine rear mounting x Exhaust pipe stay		19	195	14
Front lower sub - frame x Steering gear assembly		127	1,300	94
Front exhaust pipe		62	630	46
Front exhaust pipe x Center exhaust pipe		43	440	32
Engine left mounting		64	650	47
Engine rear mounting x Transaxle		88	890	64
Drive plate x Crankshaft		83	850	61
Torque converter clutch x Drive plate		25	250	18
Park/neutral position switch x Control shaft lever		13	135	10
Park/neutral position switch x Transaxle case	Bolt	5.4	55	48 in.·lbf
	Nut	6.9	70	61 in.·lbf
No. 1 manifold stay	Bolt	21	210	15
	Nut	43	440	32
Stiffener plate	12 mm Bolt	21	210	15
	14 mm Bolt	43	440	32
Transaxle housing x Engine	10 mm Bolt	46	470	34
	12 mm Bolt	64	650	47
Suspension member	A Bolt	35	360	26
(See page AX-15)	B Bolt	80	820	59
	C Bolt	175	1,800	130
	D Bolt	127	1,300	94
	E Bolt	167	1,700	123
	Nut	80	820	59

SS0MX-08

TORQUE SPECIFICATION

Part tightened		N·m	kgf·cm	ft·lbf
Bearing retainer x Drive end frame	M/T	2.6	27	23 in.·lbf
	A/T	3.0	30	27 in.·lbf
Rectifier end frame x Drive end frame		4.5	46	40 in.·lbf
Generator pulley x Rotor		110	1,125	81
Rectifier end frame x Brush holder, Voltage regulator		2.0	20	17 in.·lbf
Rectifier holder x Coil lead on rectifier end frame	M/T	2.0	20	17 in.·lbf
	A/T	2.9	30	25 in.·lbf
Rear end cover x Rectifier holder		4.4	44	38 in.·lbf
Plate terminal x Rectifier holder (A/T only)	Nut	4.4	45	39 in.·lbf
	Bolt	3.9	40	35 in.·lbf
Terminal insulator x Rectifier holder		4.1	42	36 in.·lbf
Generator x Generator bracket		54	530	40
Generator x Adjusting bar		19	185	14

SS0MP-01

TORQUE SPECIFICATION

Part tightened	N·m	kgf·cm	ft·lbf
Cylinder block x Drain plug	25	250	18
Water pump x Water pump cover, Cylinder block	8.8	90	78 in.·lbf
Generator drive belt adjusting bar x Cylinder block	27	275	20
Water bypass pipe x Water pump cover	9.3	95	82 in.·lbf
Water inlet x Water pump cover	8.8	90	78 in.·lbf
Upper radiator support x Body	13	130	9
Oil cooler x Radiator lower tank	8.3	85	74 in.·lbf
Oil cooler pipe x Oil cooler	14.7	150	11
Radiator x No.1 cooling fan, No.2 cooling fan	5.0	50	43 in.·lbf

SS0MK-01

TORQUE SPECIFICATION

Part tightened	N·m	kgf·cm	ft·lbf
TVV x Water outlet	29	300	22
EGR valve x Intake manifold	13	130	9
EGR valve x EGR pipe	59	600	43
EGR pipe x Cylinder head	59	600	43
Front TWC x Oxygen sensor (bank 1 sensor 2)	44	450	33
Front TWC x Exhaust manifold	29	300	22
RH exhaust manifold stay x Front TWC, Cylinder block	42	425	31
Front exhaust pipe x Front TWC	62	630	46
Front exhaust pipe x Pipe support bracket	19	195	14
Rear TWC x Front exhaust pipe	43	440	32

SS0MJ-07

TORQUE SPECIFICATION

Part tightened		N·m	kgf·cm	ft·lbf
Oil pump pulley x Oil pump drive shaft		24	245	18
No.2 idler pulley x Cylinder block		42	425	31
Crankshaft pulley x Crankshaft		108	1,100	80
Camshaft timing pulley x Camshaft		54	550	40
	for SST	37	380	27
No.1 idler pulley x Cylinder head		42	425	31
RH engine mounting bracket x Cylinder block		52	530	38
RH engine mounting insulator x Body	Nut	28	285	21
	Bolt	64	650	47
RH engine mounting insulator x Mounting bracket	Bolt	37	380	27
	Nut	52	530	38
Cylinder head x Cylinder block	1st	49	500	36
	2nd	Turn 90°	Turn 90°	Turn 90°
Spark plug tube x Cylinder head		39	400	29
Camshaft bearing cap x Cylinder head		19	190	14
Cylinder head cover x Cylinder head		23	230	17
RH engine hanger x Generator bracket		25	250	18
LH engine hanger x Cylinder head		25	250	18
Generator bracket x Cylinder head		25	250	18
No.3 timing belt cover x Cylinder head		7.8	80	69 in.·lbf
Delivery pipe x Cylinder head		13	130	9
Intake manifold x Cylinder head		19	195	14
Fuel inlet hose x Delivery pipe		34	350	25
Intake manifold stay x Intake manifold		21	210	15
Intake manifold stay x Cylinder block		44	440	32
EGR valve x intake manifold		13	130	9
EGR pipe x Cylinder head		59	600	43
Water bypass pipe x Water pump cover		9.3	95	82 in.·lbf
Water bypass pipe x Cylinder head		19	195	14
Water outlet x Cylinder head		15	150	11
Front TWC x Exhaust manifold		29	300	22
Oxygen sensor (bank 1 sensor 1) x Exhaust manifold		20	200	14
Oxygen sensor (bank 1 sensor 2) x Front TWC		44	450	33
Exhaust manifold x Cylinder head		49	500	36
RH exhaust manifold stay x Front TWC, Cylinder block		42	425	31
LH exhaust manifold stay x Front TWC		42	425	31
LH exhaust manifold stay x Transaxle		39	400	29
Main bearing cap x Cylinder block		59	600	43
Connecting rod cap x Connecting rod	1st	25	250	18
	2nd	Turn 90°	Turn 90°	Turn 90°
Rear oil seal retainer x Cylinder block		13	130	9
Water pump x Cylinder block		7.8	80	69 in.·lbf
Generator drive belt adjusting bar x Cylinder block		27	275	20
PS pump bracket x Cylinder block		43	440	32

Rear end plate x Cylinder block		9.3	95	82 in.·lbf
Flywheel x Crankshaft (M/T)		88	900	65
Drive plate x Crankshaft (A/T)		83	850	61
Clutch cover x Flywheel (M/T only)		19	195	14
Transaxle x Cylinder block	14 mm head	46	470	34
	17 mm head	64	650	47
Rear end plate stiffener x Cylinder block		44	440	32
Rear end plate stiffener x Transaxle	12 mm head	21	210	15
	14 mm head	44	440	32
Drive plate x Torque converter clutch (A/T only)		25	250	18
Starter x Transaxle		39	400	29
Drive shaft bearing bracket x Cylinder block		64	650	47
LH engine mounting insulator x Mounting bracket		64	650	47
LH engine mounting insulator x Body		73	740	54
Engine mounting center member x Body		35	360	26
Rear engine mounting bracket x Transaxle		78	800	58
Rear engine mounting insulator x Front suspension member		80	820	59
Rear engine mounting insulator x Mounting bracket		88	900	65
Front engine mounting insulator x Mounting bracket		88	900	65
Clutch release cylinder x Transaxle (M/T only)		12	120	9
PS pump x PS pump bracket	Adjusting bolt	39	400	29
	Others	43	440	32
A/C compressor x Cylinder block		25	250	18
Generator x Generator bracket		54	530	40
Generator x Generator drive belt adjusting bar		19	185	14
Fuel inlet hose x Fuel filter		29	300	22
Upper radiator support x Body		13	130	9
Front exhaust pipe x Front TWC		62	630	46
Front exhaust pipe x Rear TWC		43	440	32
Rear TWC x Center exhaust pipe		43	440	32
Center exhaust pipe x Tailpipe		43	440	32
Exhaust pipe support bracket x Front suspension member		19	195	14
Exhaust pipe support bracket x Rear engine mounting insulator		19	195	14
Front exhaust pipe x Exhaust pipe support bracket		19	195	14
Rear exhaust pipe support bracket x Body		13	130	10
Center floor crossmember brace x Body		26	260	19

SS0MT-09

TORQUE SPECIFICATION

Part tightened	N·m	kgf·cm	ft·lbf
Spark plug x Cylinder head	18	180	13
Distributor x Cylinder head	19	195	14
Crankshaft position sensor x Oil pump	9.5	95	82 in.·lbf

LUBRICATION (7A-FE)

SS1CP-01

SERVICE DATA

Oil pressure		at idle speed	29 kPa (0.3 kgf/cm^2, 43 psi) or more
		at 3,000 rpm	245 - 490 kPa (2.5 - 5.0 kgf/cm^2, 36 - 71 psi)
Oil pump	Body clearance	STD	0.080 - 0.180 mm (0.0031 - 0.0071 in.)
		Maximum	0.20 mm (0.0079 in.)
	Tip clearance	STD	0.025 - 0.085 mm (0.0010 - 0.0033 in.)
		Maximum	0.35 mm (0.0138 in.)
	Side clearance	STD	0.025 - 0.085 mm (0.0010 - 0.0033 in.)
		Maximum	0.10 mm (0.0039 in.)

SS0MR-06

TORQUE SPECIFICATION

Part tightened		N·m	kgf·cm	ft·lbf
Oil pan x Drain plug		39	400	29
Oil pump body cover x Oil pump body		8.8	90	78 in.·lbf
Oil pump x Cylinder block		8.8	90	78 in.·lbf
Oil pump pulley x Oil pump drive rotor		24	245	18
Oil strainer x Cylinder block		5.4	55	48 in.·lbf
Oil strainer x Oil pump		5.4	55	48 in.·lbf
Oil pan x Cylinder block		5.4	55	48 in.·lbf
Oil pan x Oil pump		5.4	55	48 in.·lbf
Front TWC x Exhaust manifold		29	300	22
RH exhaust manifold stay x Front TWC		42	425	31
RH exhaust manifold stay x Cylinder block		42	425	31
Oil cooler x Cylinder block	Union bolt	78	800	58
	Nut	7.8	80	69 in.·lbf
Front exhaust pipe x Front TWC		62	630	46

SS0MN-01

TORQUE SPECIFICATION

Part tightened		N·m	kgf·cm	ft·lbf
Fuel line				
Union bolt type		29	300	22
Flare nut type	Fuel pump side	24	240	17
	Others	30	310	22
Fuel pressure regulator x Delivery pipe		5.4	55	48 in.·lbf
Fuel return pipe x Fuel pressure regulator		19	195	14
Delivery pipe x Cylinder head		13	130	9
Fuel inlet hose x Delivery pipe		34	350	25
Cylinder head cover x Cylinder head		23	230	17
Fuel pump x Fuel tank		3.5	35	31 in.·lbf
Fuel tank filler pipe x Fuel tank		3.5	35	31 in.·lbf
Breather tube x Fuel tank		1.8	18	16 in.·lbf
Fuel evaporation vent tube x Fuel tank		1.8	18	16 in.·lbf
Fuel tank band x Body		40	400	30
Throttle body x Intake manifold		19	195	14
Knock sensor 1 x Cylinder block		44	450	33
Oxygen sensor (bank 1 sensor 1) x Exhaust manifold		20	200	14
Oxygen sensor (bank 1 sensor 2) x Front TWC		44	450	33

SS0MV-05

TORQUE SPECIFICATION

Part tightened	N·m	kgf·cm	ft·lbf
Starter x Transaxle	42	430	31
End cover x Field frame	1.5	15	13 in.·lbf
Starter housing x Magnetic switch	5.9	60	52 in.·lbf
Field frame x Armature assembly	5.9	60	52 in.·lbf
Lead wire x Terminal C of starter	5.9	60	52 in.·lbf
Terminal nut x Terminal C of starter, Terminal 30 of starter	17	170	12
Magnetic switch end cover x Magnetic switch	2.5	26	23 in.·lbf

SS1CW-02

TORQUE SPECIFICATION

Part tightened		N·m	kgf·cm	ft·lbf
Bearing retainer x Drive end frame	M/T	2.6	27	23 in.·lbf
	A/T	3.0	31	26 in.·lbf
Rectifier end frame x Drive end frame		4.5	46	40 in.·lbf
Generator pulley x Rotor		110	1,125	81
Rectifier end frame x Brush holder, Voltage regulator		2.0	20	17 in.·lbf
Rectifier holder x Coil lead on rectifier end frame	M/T	2.0	20	17 in.·lbf
	A/T	2.9	30	25 in.·lbf
Rear end cover x Rectifier holder		4.4	45	39 in.·lbf
Plate terminal x Rectifier holder (A/T only)	Nut	4.4	45	39 in.·lbf
	Bolt	3.9	40	35 in.·lbf
Terminal insulator x Rectifier holder		4.1	42	36 in.·lbf
Generator x Generator bracket		61	600	45
Generator x Adjusting bar		19	185	14

EMISSION CONTROL (7A-FE)

TORQUE SPECIFICATION

SS1CK-02

Part tightened	N·m	kgf·cm	ft·lbf
TVV x Water inlet housing	29	300	22
EGR valve x Intake manifold	13	130	9
Front exhaust pipe x Exhaust manifold	62	630	46
Front exhaust pipe x Pipe support bracket	19	195	14
TWC x Exhaust pipe	43	440	32

SS1CJ-02

TORQUE SPECIFICATION

Part tightened		N·m	kgf·cm	ft·lbf
Cylinder head x Spark pluds		18	180	13
Cylinder head cover x Cylinder head		5.9	60	52 in.·lbf
IIA x Cylinder head		20	200	14
Camshaft timing pulley x Camshaft		59	600	43
Idler pulley x Cylinder block		37	375	27
Cylinder block x Timing belt cover		7.4	75	65 in.·lbf
Crankshaft pulley x Crankshaft		118	1,200	87
A/C compressor mounting bracket x Cylinder block		47	480	35
Water pump pulley x Water pump pulley seat		9.3	95	82 in.·lbf
RH engine mounting insulator x Body		64	650	47
RH engine mounting insulator x Mounting bracket	12 mm head 14 mm head	28 52	290 530	21 38
Cylinder head x Cylinder block	1st 2nd 3rd	29 Turn 90° Turn 90°	300	22
Camshaft bearing cap x Cylinder head		13	130	9
Generator bracket x Cylinder head		26	270	20
No.2 water inlet x Cylinder head		15	150	11
Oil dipstick guide x No.2 water inlet		9	95	82 in.·lbf
Intake manifold x Cylinder head		19	195	14
Intake manifold stay x Intake manifold	12 mm head	19	195	14
Intake manifold stay x Cylinder block	14 mm head	39	400	29
Water inlet housing x Cylinder head		20	200	14
Water outlet x Cylinder head		20	200	14
Heat insulator x Exhaust manifold		9.3	95	82 in.·lbf
Exhaust manifold x Cylinder head		34	350	25
Exhaust manifold stay x Cylinder block		39	400	29
Upper heat insulator x Exhaust manifold		9.3	95	82 in.·lbf
PS pump adjusting bracket x PS pump		39	400	29
Water pump x Water pump pulley		9.3	95	82 in.·lbf
Cylinder head x Engine hanger		27	280	20
Main bearing cap x Cylinder block		60	610	44
Connecting rod cap x Connecting rod	1st 2nd	29 Turn 90°	250	18
Rear oil seal retainer x Cylinder block		9.3	95	82 in.·lbf
Knock sensor x Cylinder block		37	380	27
Engine coolant drain plug x Cylinder block		34	350	25
Water pump x Cylinder block		14	145	11
RH engine mounting bracket x Cylinder block		51	525	38
Generator bracket x Cylinder block		26	270	20
Rear end plate x Cylinder block		5.6	55	48 in.·lbf
PS pump adjusting bracket x Cylinder block		43	440	32
Flywheel x Crankshaft (M/T)		78	800	58
Drive plate x Crankshaft (A/T)		64	650	47

Clutch cover x Flywheel (M/T only)		19	195	14
Transaxle x Engine	14 mm head	46	470	34
	17 mm head	64	650	47
No.1 oil pan x Transaxle		23	230	17
Transaxle control cable bracket x Transaxle (A/T only)		12	120	9
Drive plate x Torque converter clutch (A/T only)		25	250	18
LH engine mounting insulator x Mounting bracket		64	650	47
LH engine mounting insulator x Body		73	740	54
RH engine mounting bracket x Mounting insulator	12 mm head	28	290	21
	14 mm head	52	530	38
Rear engine mounting bracket x Transaxle		78	800	58
Engine mounting center member x Body		35	360	26
Rear engine mounting insulator x Front suspension member		80	820	59
Rear engine mounting insulator x Mounting bracket		88	900	65
Front engine mounting insulator x Mounting bracket		88	900	65
Clutch release cylinder x Transaxle (M/T only)		12	120	9
PS pump bracket x Cylinder block	12 mm head	19	195	14
	14 mm head	39	400	29
A/C idler pulley x Idler pulley bracket		39	400	29
A/C compressor x Cylinder block		25	20	18
Upper radiator support x Body		13	130	9
Front exhaust pipe x Exhaust manifold		62	630	46
Front exhaust pipe x Rear TWC		43	440	32
Rear TWC x Center exhaust pipe		43	440	32
Center exhaust pipe x Tailpipe		43	440	32
Exhaust pipe support bracket x Front suspension member		19	195	14
Exhaust pipe support bracket x Rear engine mounting insulator		19	195	14
Fuel inlet hose x Fuel filter		30	300	22
Front exhaust pipe x Exhaust pipe support bracket		19	195	14
Exhaust pipe support bracket x Body		13	130	10
Center floor crossmember brace x Body		26	260	19

IGNITION (5S-FE)

SS0MS-12

SERVICE DATA

High-tension cord	Resistance	Maximum	25 kΩ per cord
Spark plug	Recommended spark plug	ND	PK20R11
		NGK	BKR6EP11
	Correct electrode gap for new plug		1.1 mm (0.043 in.)
Ignition coil	Primary coil resistance	at cold	0.36 - 0.55 Ω
		at hot	0.45 - 0.65 Ω
	Secondary coil resistance	at cold	9.0 - 15.4 kΩ
		at hot	11.4 - 18.1 kΩ
Distributor	Resistance	at cold	135 - 220 Ω
		at hot	175 - 255 Ω
Crankshaft position sensor	Resistance	at cold	985 - 1,600 Ω
		at hot	1,265 - 1,890 Ω

SS1CS-01

TORQUE SPECIFICATION

Part tightened	N·m	kgf·cm	ft·lbf
Spark plug x Cylinder head	18	180	13
Distributor x Cylinder head	20	200	15
Crankshaft position sensor x Oil pump	9.3	95	82 in.·lbf

MAINTENANCE

SS0MG-01

SERVICE DATA

Front axle and suspension		
Ball joint vertical play	Maximum	0 mm (0 in.)

SS1CQ-01

TORQUE SPECIFICATION

Part tightened	N·m	kgf·cm	ft·lbf
No.2 oil pan x Drain plug	44	450	32
Oil pump body cover x Oil pump body	10	105	8
Oil pump x Cylinder block	21	218	16
No.1 oil pan x Cylinder block	16	165	12
No.1 oil pan x Oil pump	7.8	80	69 in.·lbf
No.1 oil pan x Rear oil seal retainer	7.8	80	69 in.·lbf
No.1 oil pan x Transaxle case	22.5	230	17
Oil strainer x Cylinder block	9.3	95	82 in.·lbf
Oil strainer x Oil pump	9.3	95	82 in.·lbf
Oil pan baffle plate x No.1 oil pan	7.8	80	69 in.·lbf
No.2 oil pan x No.1 oil pan	4.9	50	43 in.·lbf

SS1CM-02

TORQUE SPECIFICATION

Part tightened		N·m	kgf·cm	ft·lbf
Fuel line				
Union bolt type		30	300	22
Flare nut type	Fuel pump side	24	240	17
	Others	30	310	22
Fuel pump, Fuel tank filler pipe x Fuel tank		3.5	35	31 in.·lbf
Fuel pressure regulator x Delivery pipe		9.3	95	82 in.·lbf
Delivery pipe x Intake manifold		15	150	11
Fuel inlet hose x Delivery pipe		29	300	22
Air intake chamber cover x Intake manifold		19	195	14
Throttle body x Air intake chamber cover		22	220	16
Accelerator cable bracket x Throttle body		11	115	8
Breather tube, Fuel evaporation vent tube x Fuel tank		1.8	18	16 in.·lbf
Fuel tank band x Body		40	400	30
Knock sensor x Cylinder block		44	450	33
Heated oxygen sensor x Center exhaust pipe		20	200	14

SS1CU-02

TORQUE SPECIFICATION

Part tightened	N·m	kgf·cm	ft·lbf
End cover x Brush holder	1.5	15	13 in.·lbf
Starter housing x Magnetic switch	5.9	60	52 in.·lbf
End cover x Starter Housing	5.9	60	52 in.·lbf
Lead wire of field frame x Magnetic switch	7.9	80	70 in.·lbf
Terminal nut x Terminal C of starter, Terminal 30 of starter	17	170	12
Magnetic switch end cover x Magnetic switch	2.5	26	23 in.·lbf
Starter x Transaxle	39	400	29
Starter wire x Terminal 30 of starter	7.9	80	70 in.·lbf

SS1D0-02

TORQUE SPECIFICATION

Part tightened		N·m	kgf·cm	ft·lbf
Oil pan drain plug		17	175	13
Transaxle case x Oil pan		5.3	55	48 in.·lbf
Shift solenoid valves (See page AX-5)	A bolt	6.4	65	56 in.·lbf
	B bolt	10	100	7
Oil strainer		10	100	7
Detent spring		10	100	7
Valve body x Transaxle case		10	100	7
Wire retainer		6.4	65	56 in.·lbf
Park/neutral position switch x Manual shaft lever		6.4	71	61 in.·lbf
Park/neutral position switch x Transaxle case		5.4	55	48 in.·lbf
Lower center member x Body		35	360	26
Lower center member x Engine front mounting		80	815	59
Lower center member x Engine rear mounting		80	815	59
Engine rear mounting x Engine rear mounting bracket		88	890	64
Engine rear mounting x Exhaust pipe stay		19	195	14
Lower suspension arm x Lower ball joint		127	1,300	94
Tie rod end x Axle carrier		49	500	36
Drive shaft x Axle hub		216	2,200	159
Front exhaust pipe x Exhaust manifold		62	630	46
Front exhaust pipe x Center exhaust pipe		42	430	31
Front exhaust pipe x Exhaust pipe stay		25	250	18
Exhaust pipe stay x Front lower sub-frame		19	195	14
Starter x Transaxle case		39	400	29
Torque converter clutch x Drive plate		25	250	18
Shift control cable x Shift control lever		12	125	9
Engine left mounting bolts (Upper side)		52	530	38
Engine left mounting bolts (Lower side)		64	650	47
Engine x Transaxle housing (Upper side)		64	650	47
Engine x Transaxle housing (Lower side) (See page MX-3)	A bolt	23	230	17
	B bolt	46	470	34
Engine lower sub-frame x Body (See page MX-3)	A bolt	127	1,300	94
	B bolt	175	1,800	130
	C bolt	167	1,700	127

SS0MC-06

TORQUE SPECIFICATION

Part tightened	N·m	kgf·cm	ft·lbf
Suction hose x Compressor	10	100	7
Discharge hose x Compressor	10	100	7
Discharge hose x Condenser	10	100	7
Compressor x Engine	25	250	18
Liquid tube x Receiver	5.4	55	48 in.·lbf
Liquid tube x Condenser	5.4	55	4
Suction tube x A/C unit	10	100	7
Liquid tube x A/C unit	10	100	7
Evaporator x Expansion valve	5.4	55	48 in.·lbf
Pressure switch x Liquid tube	10	100	7
Liquid lines	10	100	7
Discharge lines	10	100	7
Suction lines	10	100	7

BODY

TORQUE SPECIFICATION

SS0M1-02

Part tightened	N·m	kgf·cm	ft·lbf
FRONT BUMPER			
Reinforcement x Body	13	130	9.4
Front bumper cover x Body	5.4	55	48 in.·lbf
REAR BUMPER			
Reinforcement x Body	95	970	70
Rear bumper cover x Body	5.4	55	48 in.·lbf
HOOD			
Hood Hinge x Hood	13	130	9.4
Hood lock x Body	7.8	80	69 in.·lbf
FRONT DOOR			
Door hinge x Body	28	290	21
Door hinge x Door panel	28	290	21
Door check x Body	32	330	24
Door check x Door panel	5.9	60	52 in.·lbf
Door lock striker x Body	26	260	19
Door lock x Door panel	5.4	55	48 in.·lbf
Door glass x Window regulator	7.8	80	69 in.·lbf
Window regulator x Door panel	5.9	60	52 in.·lbf
Window guide lower plate x Door panel	7.8	80	69 in.·lbf
Door window upper stop x Door panel	5.4	55	48 in.·lbf
Mirror bracket x Door panel	7.8	80	69 in.·lbf
BACK DOOR			
Back door hinge x Body	21	210	15
Back door hinge x Back door	14	145	11
Door lock x Body	19	195	14
Door lock striker x Back door	19	195	14
Back door damper stay x Body	8.8	90	78 in.·lbf
Back door damper stay x Back door	8.8	90	78 in.·lbf
LUGGAGE COMPARTMENT			
Luggage compartment door hinge x Body	5.4	55	48 in.·lbf
Luggage compartment door hinge x Luggage compartment door	5.4	55	48 in.·lbf
Door lock x Body	5.4	55	48 in.·lbf
Damper stay x Body	26	260	19
Damper stay x Luggage compartment door	26	260	19
WIPER AND WASHER			
Front wiper			
Wiper arm x Wiper link	21	205	15
Rear Wiper			
Wiper arm x Door panel	5.4	55	48 in.·lbf
SLIDING ROOF			
Drive gear x Body	5.4	55	48 in.·lbf

INSTRUMENT PANEL			
Steering column x Center console bracket support	25	260	19
Front passenger airbag assembly x Center console bracket support	21	210	15
Steering wheel x Steering column	34	350	25
Steering wheel pad x Steering wheel	9.0	92	80 in.·lbf
FRONT SEAT			
Seat adjuster x Body	37	375	27
Seat adjuster x Seatback	18	185	13
Seat adjuster x Seat cushion	18	185	13
REAR SEAT			
Seatback hinge LH and RH x Body	8.0	82	71 in.·lbf
Seatback hinge center x Body	18	185	13
Seatback x Seatback hinge	18	185	13
Seatback lock striker x Body	19	195	14
Seatback lock x Seatback	19	195	14
SEAT BELT			
Front seat belt			
Outer belt shoulder anchor x Body	43	440	32
Outer belt floor anchor x Body	43	440	32
Retactor x Body (Upper Side)	7.5	80	69 in.·lbf
Retactor x Body (Lower Side)	43	440	32
Inner belt x Seat	43	440	32
Rear Seat Belt			
Outer belt shoulder anchor x Body	43	440	32
Outer belt floor anchor x Body	43	440	32
Retractor x Body	43	440	32
Inner belt x Body	43	440	32

SS0LN-09

TORQUE SPECIFICATION

Part tightened	N·m	kgf·cm	ft·lbf
Master cylinder x Piston stopper bolt	10	100	7
Master cylinder x Reservoir	1.7	17.5	15.2 in.·lbf
Master cylinder x Brake booster	13	130	9
Brake line union nut	15	155	11
Brake booster clevis lock nut	25	260	19
Brake booster x Pedal bracket	13	130	9
Front disc brake caliper installation bolt	34	350	25
Bleeder plug	8.3	85	74 in.·lbf
Front disc brake torque plate x Steering knuckle	107	1,090	79
Front disc brake caliper x Flexible hose	30	310	22
Rear disc brake torque plate x Axle carrier	47	475	34
Rear disc brake caliper installation bolt	20	200	14
Rear disc brake caliper main pin installation bolt	27	270	19
Rear disc brake caliper x Flexible hose	30	310	22
Flexible hose x Shock absorber bracket	19	195	14
ABS actuator assembly x Body	19	195	14
ABS actuator x ABS actuator bracket assembly	5.4	55	48 in.·lbf
Front speed sensor installation bolt	8.0	82	71 in.·lbf
Rear speed sensor installation bolt	8.0	82	71 in.·lbf
Speed sensor harness clamp bolt	5.0	51	44 in.·lbf
Rear drum brake wheel cylinder x Backing plate	10	100	7

SS0LX-02

TORQUE SPECIFICATION

Part tightened		N·m	kgf·cm	ft·lbf
Clutch line union		15	155	11
Master cylinder installation nut		12	120	8.3
Bleeder plug		8.3	85	74 in.·lbf
Release cylinder installation bolt		12	120	8.3
Clutch line bracket		4.9	50	43 in.·lbf
Clutch cover x Flywheel		19	195	14
Flywheel	7A-FE Engine	78	800	58
	5S-FE Engine	88	900	65
Release fork support	7A-FE Engine	37	375	27
	5S-FE Engine	39	400	29

SS0MH-01

TORQUE SPECIFICATION

Part tightened		N·m	kgf·cm	ft·lbf
Front seat mounting bolts		36.8	375	27
Front suspension member x Body	Bolt A	167	1,700	123
Front suspension member x Body	Bolt B	127	1,300	94
Front suspension member x Body	Bolt C	175	1,800	130
Rear suspension member x Body		137	1,400	102

SS0LZ-05

TORQUE SPECIFICATION

Part tightened		N·m	kgf·cm	ft·lbf
Transmission case x Transaxle case		29	300	22
Transmission case x Case cover		29	300	22
Transmission case protector		18	185	13
Rear bearing retainer		42	430	31
Output shaft front bearing lock plate		18	185	13
Transaxle case receiver set bolt		7.4	75	65 in.·lbf
5th driven gear lock nut		123	1,250	90
Reverse idler shaft lock bolt		29	300	22
Control shaft cover		37	375	27
Control shift lever x Lever shaft		6.4	65	56 in.·lbf
Ring gear x Differential case		83	850	61
Selecting bellcrank x Transmission case		37	380	27
Engine mount bracket x Transaxle		52	530	38
Reverse shift arm bracket		18	185	13
No.3 shift fork x Shift fork shaft		18	185	13
Lock ball assembly		29	300	22
Filler plug and drain plug		49	500	36
Back-up light switch		44	450	33
Differential side bearing retainer		18	185	13
Release bearing retainer		7.4	75	65 in.·lbf
Straight screw plug		13	130	9
Vehicle speed sensor		5.4	55	48 in.·lbf
Transaxle x Engine	12 mm bolt	64	650	47
	10 mm bolt	46	470	34
Stiffener plate	Bolt and nut A	43	440	32
(See page MX-4)	Bolt B	21	210	15
Exhaust pipe support bracket		19	195	14
Engine left mounting set bolt and nut		64	650	47
Center member x Body		52	530	38
Center member x Engine mounting		80	820	59
Transaxle x Engine mounting		77	790	57
Engine mounting through bolt		87	890	64
Front exhaust pipe x Exhaust center pipe		43	440	32
Front exhaust pipe x Exhaust manifold		62	630	46
Ground cable set bolt		19	195	14
Clutch release cylinder x Transaxle		12	120	9
Starter x Transaxle		39	400	29
Shift lever assembly x Body		12	120	9
Grommet x Body		4.9	50	43 in.·lbf
Transmission control cable bracket x Body		4.9	50	43 in.·lbf
Heat insulator x Body		5.4	55	48 in.·lbf

SUPPLEMENTAL RESTRAINT SYSTEM

SERVICE DATA

SS1D1-01

FRONT AIRBAG SENSOR	
⊕S - ⊕A	755 - 885 Ω
⊕S - ⊖S	1 MΩ or Higher
⊖S - ⊖A	Less than 1 Ω

SS0LS-02

TORQUE SPECIFICATION

Part tightened		N·m	kgf·cm	ft·lbf
STEERING COLUMN				
Steering wheel set nut		34	350	25
Steering wheel pad set screw (Torx screw)		9.0	92	80 in.·lbf
Steering column assembly set nut		25	260	19
Steering column assembly set bolt		14	145	11
Control valve shaft x Intermediate No.2 shaft		35	360	26
Intermediate shaft x Intermediate No.2 shaft		35	360	26
Intermediate shaft x Main shaft		35	360	26
Compression spring torx bolt		7.8	80	69 in.·lbf
Turn signal bracket set bolt		5.4	55	47 in.·lbf
Tilt lever retainer set nut		15	150	11
Tilt pawl set bolt x Nut		5.9	60	52 in.·lbf
Tilt lever assembly set bolt		2.9	30	26 in.·lbf
Column protector set bolt		2.9	30	26 in.·lbf
PS VANE PUMP				
7A-FE:				
Union bolt		52	525	38
Drive belt adjusting bolt		39	400	29
Pump assembly set bolt		39	400	29
Bracket set bolt	12 mm Bolt	19	195	14
	14 mm Bolt	39	400	29
Vane pump pulley set nut		43	440	32
Air control valve		36	370	27
Bracket x Oil reservoir x Front housing	12 mm Bolt	13	130	9
	14 mm Bolt	41	420	30
Pressure port union		69	700	51
5S-FE:				
Union bolt x Pressure feed tube		52	525	38
Drive belt adjusting bolt		43	440	32
Pump assembly set bolt		43	440	32
Bracket set bolt		43	440	32
Vane pump pulley set nut		43	440	32
Union bolt x Pressure feed No.2 tube		69	700	51
Suction port union set bolt		13	130	9
Pressure port union		69	700	51
PS GEAR				
Control valve shaft x Intermediate No.2 shaft		35	360	26
Pressure feed tube and return tubes x Control valve housing		36 (44)	365 (450)	26 (32)
Tube clamp bracket set bolt		13	130	9
PS gear assembly set bolt x Nut		127	1,300	94
Turn pressure tube union nut		19 (25)	195 (250)	14 (18)
Tie rod end lock nut		56	570	41
Rack end		60 (83)	615 (850)	45 (61)

Rack guide spring cap lock nut	50 (69)	513 (700)	37 (50)
Rack housing cap lock nut	50 (69)	513 (700)	37 (50)
Control valve housing set bolt	31	315	23
Rack housing No.2 bracket set bolt	39	400	29
Engine mount x Transaxle	88	890	64
Front exhaust pipe x TWC	43	440	32
Front exhaust pipe x Exhaust manifold	62	630	46
Exhaust pipe support bracket	19	195	14
Oxygen sensor x Front exhaust pipe	44	450	32

( ): For use without SST

SS061-60

TORQUE SPECIFICATION

Part tightened	N·m	kgf·cm	ft·lbf
Steering wheel	34	350	25
Steering wheel pad	9.0	92	80 in.·lbf
Front passenger airbag assembly x Instrument panel reinforcement	21	210	15
Airbag sensor assembly	21	210	15
Front airbag sensor	29	300	22

SUSPENSION AND AXLE

SS0LT-02

SERVICE DATA

Cold tire inflation Pressure	Tire size		
	P205/55R15 87V	Front, rear	230 kPa (2.3 kgf/cm^2, 33 psi)
	205/55R15 87V	Front, rear	230 kPa (2.3 kgf/cm^2, 33 psi)
	P185/70R14 87S	Front, rear	200 kPa (2.0 kgf/cm^2, 29 psi)
	185/70R14 87S	Front, rear	200 kPa (2.0 kgf/cm^2, 29 psi)
Front wheel alignment	Vehicle height		
	P185/70R14	Front*1	187.6 mm (7.39 in.)
		Rear*2	255.8 mm (10.07 in.)
	205/55R15	Front*1	182.6 mm (7.19 in.)
		Rear*2	250.0 mm (9.84 in.)
	Camber		
		7A-FE	-0 °51' ± 45' (-0.85° ± 0.75°)
		5S-FE	-0 °46' ± 45' (-0.77° ± 0.75°)
		Left-right error	45' (0.75°) or less
	Caster		
		7A-FE	2°07' ± 45' (2.12° ± 0.75°)
		5S-FE	2°05' ± 45' (2.08° ± 0.75°)
		Left-right error	45' (0.75°) or less
	Steering axis inclination		
		7A-FE	15°06' ± 45' (15.10° ± 0.75°)
		5S-FE	14°58' ± 45' (14.97° ± 0.75°)
	Toe-in (total)		0° ± 12' (0° ± 0.2°, 0 ± 2 mm, 0 ± 0.08 in.)
		Tie rod end length difference	1.5 mm (0.059 in.) or less
	Wheel angle (Max.)	Inside wheel	36°54' ± 2° (36.90° ± 2°)
		Outside wheel	30°44' (30.73°)
Rear wheel alignment	Camber		
		7A-FE	-1 °16' ± 45' (-1.27° ± 0.75°)
		5S-FE	-1 °10' ± 45' (-1.17° ± 0.75°)
		Left-right error	45' (0.75°) or less
	Toe-in (total)		0°21' ± 12' (0.35° ± 0.2°, 3.5 ± 2 mm, 0.14 ± 0.08 in.)
Front axle	Axle bearing backlash		0.08 mm (0.0031 in.) or less
	Axle hub deviation		0.07 mm (0.0028 in.) or less
Front suspension	Lower ball joint turning torque		1.0 - 2.9 N·m (10 - 30 kgf·cm, 8.7 - 26 in.·lbf)
	Stabilizer bar link turning torque		0.05 - 1.0 N·m (0.5 - 10 kgf·cm, 0.4 - 8.7 in.·lbf)
Rear axle	Axle bearing backlash		0.05 mm (0.0020 in.) or less
	Axle hub deviation		0.07 mm (0.0028 in.) or less
Rear suspension	Stabilizer bar link turning torque		0.05 - 1.0 N·m (0.5 - 10 kgf·cm, 0.4 - 8.7 in.·lbf)

*1: Measure the distance from the ground to the center of the front side lower suspension arm mounting bolt.
*2: Measure the distance from the ground to the center of the front side strut rod mounting bolt.

SS0LU-01

TORQUE SPECIFICATION

Part tightened	N·m	kgf·cm	ft·lbf
FRONT			
Tie rod end lock nut	56	570	41
Steering knuckle x Shock absorber	153	1,560	113
Steering knuckle x Brake caliper	103	1,050	76
Steering knuckle x Tie rod end	49	500	36
Steering knuckle x Dust cover	8.3	85	74 in.·lbf
ABS speed sensor set bolt	8.0	82	71 in.·lbf
Axle hub x Drive shaft	216	2,200	159
Lower ball joint x Lower suspension arm	127	1,300	94
Lower ball joint x Steering knuckle	103	1,050	76
Shock absorber upper side (Suspension support) x Body	80	820	59
Shock absorber piston rod x Suspension support	47	480	35
Brake hose x Shock absorber	19	192	14
ABS speed sensor wire harness x Shock absorber	5.0	51	44 in.·lbf
Lower suspension arm (Front) x Front sub-frame	157	1,600	116
Lower suspension arm (Rear) x Front sub-frame	167	1,700	123
Center member x Front sub-frame	80	820	59
Front sub-frame (Center) x Body	127	1,300	94
Front sub-frame (Rear) x Body	175	1,800	130
Exhaust pipe support bracket x Front sub-frame	19	195	14
Power steering gear assembly x Front sub-frame	127	1,300	94
Stabilizer bar x Stabilizer bar link	44	450	33
Stabilizer bar link x Lower suspension arm	44	450	33
Stabilizer bar bushing retainer x Front sub-frame	19	195	14
REAR			
Brake caliper x Rear axle carrier	47	475	34
Axle hub with bearing set bolt	80	820	59
Shock absorber x Rear axle carrier	255	2,600	188
Brake hose x Shock absorber	19	192	14
ABS speed sensor set bolt	8.0	82	71 in.·lbf
ABS speed sensor wire x Shock absorber	5.0	51	44 in.·lbf
Suspension upper support x Body	39	400	29
Suspension upper support x Piston rod	49	500	36
No.1 and No.2 lower suspension arm x Suspension member	197	2,010	145
No.1 and No.2 lower suspension arm x Rear axle carrier	197	2,010	145
Strut rod x Body	113	1,150	83
Strut rod x Rear axle carrier	113	1,150	83
Suspension member x Body	137	1,400	101
Stabilizer bar bushing retainer	19	195	14
Stabilizer bar link set nut	44	450	33

SS1CY-02

TORQUE SPECIFICATION

Part tightened		N·m	kgf·cm	ft·lbf
Transaxle x Engine	12 mm bolt	64	650	47
	10 mm bolt	46	470	34
Transaxle x Engine (Rear end plate side)		23	230	17
Engine left mounting bracket x Engine left mounting insulator		64	650	47
Engine front mounting bracket x Transaxle		77	790	57
Engine front mounting bracket x Engine front mounting insulator		87	890	64
Engine rear mounting bracket x Transaxle		77	790	57
Engine rear mounting bracket x Engine rear mounting insulator		87	890	64
Center crossmember x Body		35	360	26
Center crossmember x Engine front mounting insulator		80	820	59
Center crossmember x Engine rear mounting insulator		80	820	59
Starter x Transaxle		39	400	29
Exhaust pipe support bracket x Engine rear mounting insulator		19	195	14
Exhaust pipe support bracket x Suspension member		19	195	14
Exhaust front pipe x Exhaust center pipe		42	430	31
Exhaust front pipe x Exhaust manifold		61	630	46
Exhaust front pipe x Exhaust pipe support bracket		25	250	18
Clutch release cylinder x Transaxle		12	120	9
Shift lever assembly Body		12	120	9
Grommet x Body		4.9	50	43 in.·lbf
Transmission control cable bracket x body		4.9	50	43 in.·lbf
Hear insulator x Body		5.4	55	48 in.·lbf
Transmission case x Transaxle case		29	300	22
Transmission case x Transmission case cover		18	185	13
Output shaft front bearing lock plate		11	115	8
Straight screw plug (Reverse restrict pin)		13	130	9
Straight screw plug		25	250	18
Transaxle case receiver x Transaxle case		11	115	8
Differential case x Ring gear		83	850	61
Reverse shaft arm bracket set bolt		17	175	13
No. 1, No. 2, No. 3 shift forks and shift head set bolt		16	160	12
Lock ball assembly		39	400	29
Reverse idler gear shaft lock bolt		29	300	22
Rear bearing retainer x Transmission case		27	280	20
5th driven gear lock nut		118	1,200	87
Shift and select lever shaft assembly x Transmission case		20	200	14
Shift and select lever shaft assembly lock bolt		29	300	22
Clutch release bearing retainer x Transaxle		11	110	8
Control lever housing support bracket x Transaxle case		11	115	8
No. 1 and No. 2 oil receiver pipe set bolt		17	175	13
Selecting bellcrank assembly x Transmission case		25	250	18
Back-up light switch		40	410	30
Vehicle speed sensor driven gear		11	115	8

Filler and Drain plugs	39	400	29
Clutch release fork support	37	375	27

TROUBLESHOOTING

PROBLEM SYMPTOMS TABLE

BR0PX-06

Use the table below to help you find the cause of the problem. The numbers indicate the priority of the likely cause of the problem. Check each part in order. If necessary, replace these parts.

Symptom	Suspect Area	Page
Low pedal or spongy pedal	8. Fluid leaks for brake system	DI-343
	9. Air in brake system	BR-4
	10.Piston seal (Worn or damaged)	BR-21 BR-28 BR-37
	11.Rear brake shoe clearance (Out of adjustment)	BR-33 BR-47
	12.Master cylinder (Faulty)	BR-8
	13.Booster push rod (Out of adjustment)	BR-17
Brake drag	1. Brake pedal freeplay (Minimal)	BR-6
	2. Parking brake lever travel (Out of adjustment)	BR-7
	3. Parking brake wire (Sticking)	-
	4. Rear brake shoe clearance (Out of adjustment)	BR-33 BR-47
	5. Pad or lining (Cracked or distorted)	BR-18 BR-28 BR-34
	6. Piston (Stuck or frozen)	BR-21 BR-28 BR-37
	7. Anchor or return spring (Faulty)	BR-28 BR-43
	8. Booster push rod (Out of adjustment)	BR-17
	9. Vacuum leaks for booster system	BR-15
	10.Master cylinder (Faulty)	BR-8
Brake pull	1. Piston (Stuck or frozen)	BR-21 BR-28 BR-37
	2. Pad or lining (Oily)	BR-18 BR-28 BR-34
	3. Disc (Scored)	BR-24 BR-40
	4. Pad or lining (Cracked or distorted)	BR-18 BR-28 BR-34

Hard pedal but brake inefficient	1. Fluid leaks for brake system	DI-343
	2. Air in brake system	BR-4
	3. Pad or lining (Worn)	BR-18 BR-28 BR-34
	4. Pad or lining (Cracked or distorted)	BR-18 BR-28 BR-34
	5. Rear brake shoe clearance (Out of adjustment)	BR-33 BR-47
	6. Pad or lining (Oily)	BR-18 BR-28 BR-34
	7. Pad or lining (Glazed)	BR-18 BR-28 BR-34
	8. Disc (Scored)	BR-24 BR-40
	9. Booster push rod (Out of adjustment)	BR-17
	10.Vacuum leaks for booster system	BR-15
Noise from brakes	1. Pad or lining (Cracked or distorted)	BR-18 BR-28 BR-34
	2. Installation bolt (Loose)	BR-21 BR-37
	3. Disc (Scored)	BR-24 BR-40
	4. Pad support plate (Loose)	BR-18
	5. Sliding pin (Worn)	BR-24 BR-40
	6. Pad or lining (Dirty or glazed)	BR-18 BR-28 BR-34
	7. Anchor or return spring (Faulty)	BR-28 BR-43
	8. Anti-squeal shim (Damaged)	BR-28 BR-43
	9. Shoe hold-down spring (Damaged)	BR-28 BR-43

IN070-02

VEHICLE LIFT AND SUPPORT LOCATIONS

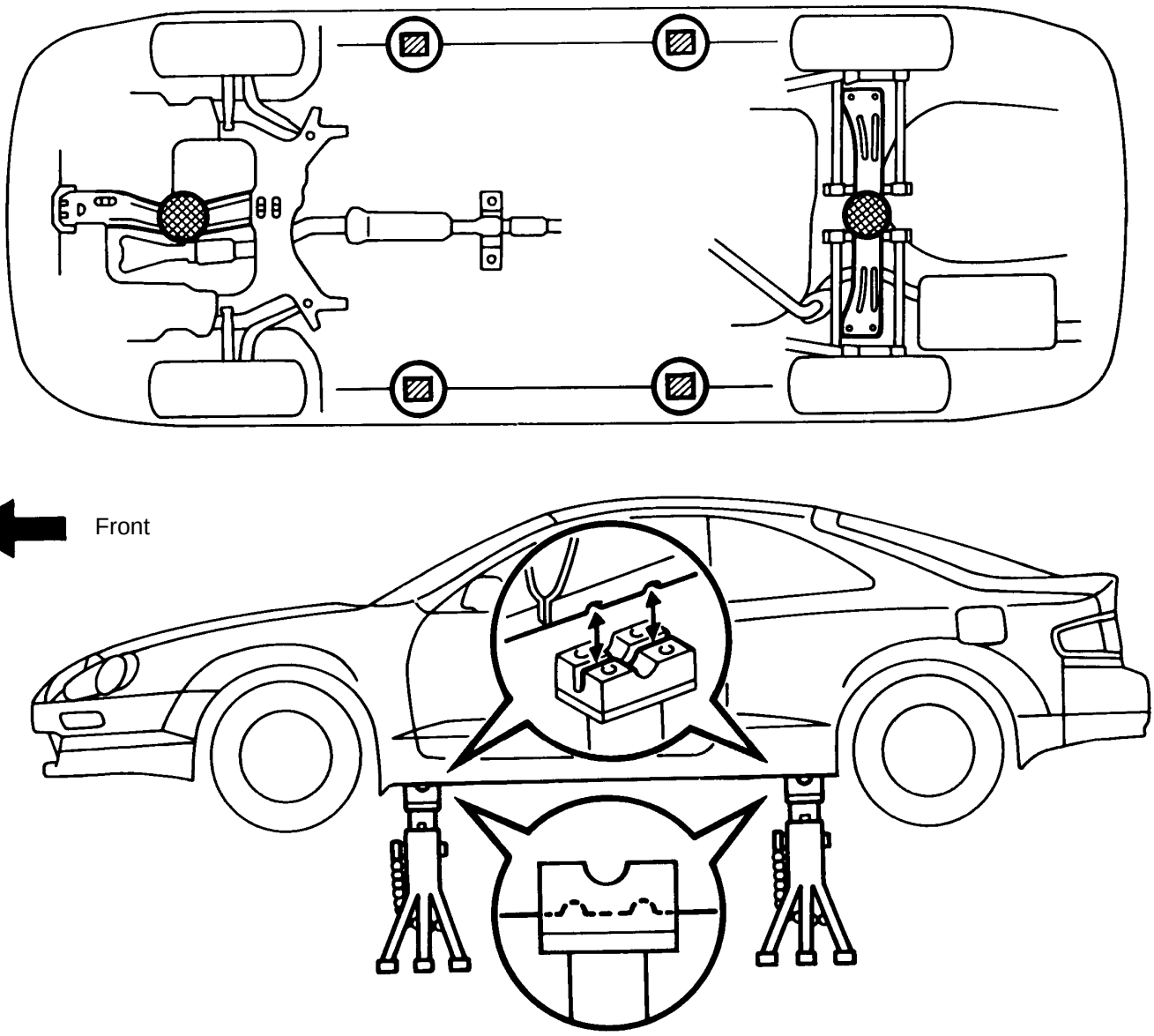

JACK POSITION

Front..... Front crossmember

Rear..... Rear axle beam

CAUTION : When jacking-up the front and rear, make sure the vehicle is not carrying any extra weight.

PANTOGRAPH JACK POSITION

SUPPORT POSITION

Safety stand and swing arm type lift .....

N19410

PLATE TYPE LIFT

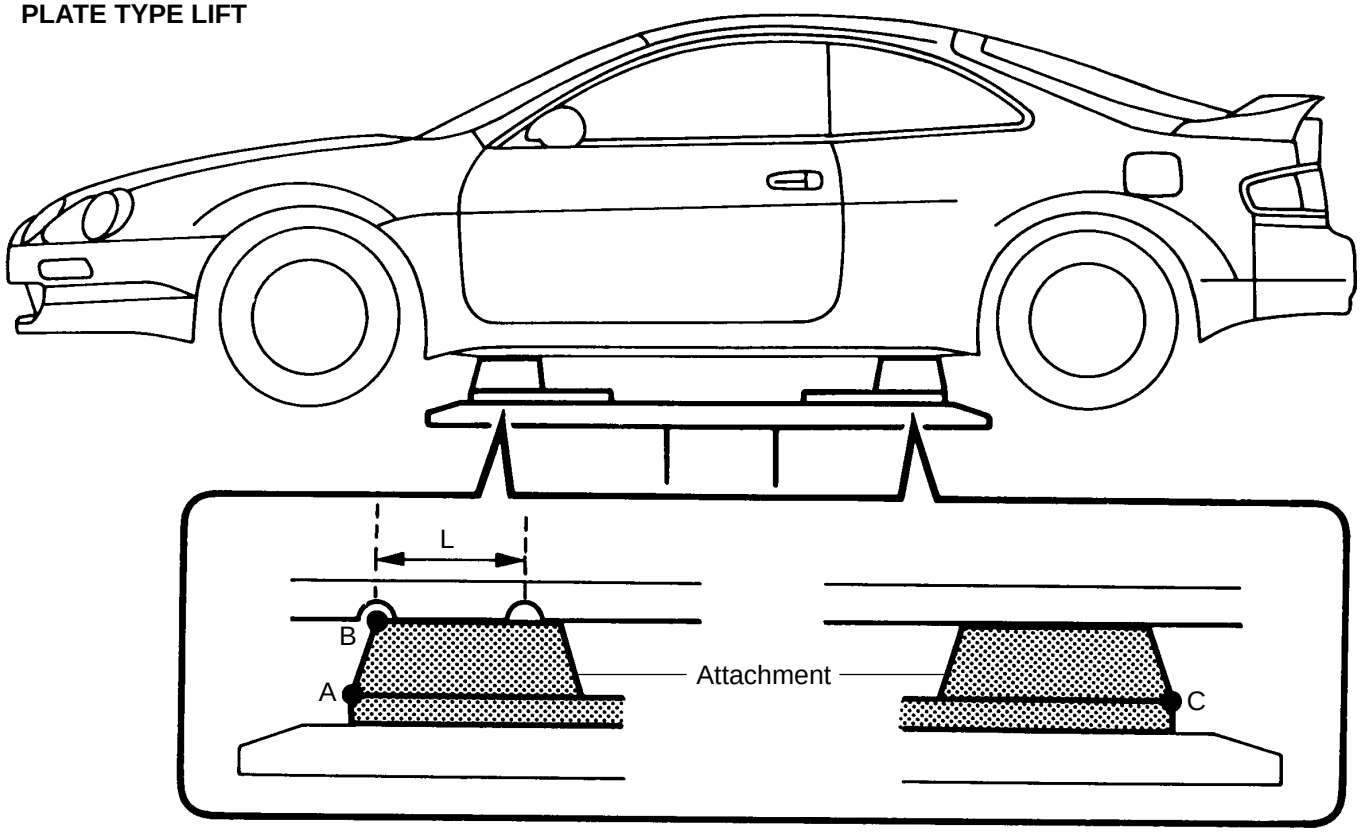

HINT :

Left and right set position	Place the vehicle over the center of the lift.
Front and rear set position	• Align the cushion gum ends of the plate with the attachment lower ends (A, C). • Align the attachment upper end (B) with the front jack supporting point (L).

Attachment dimensions

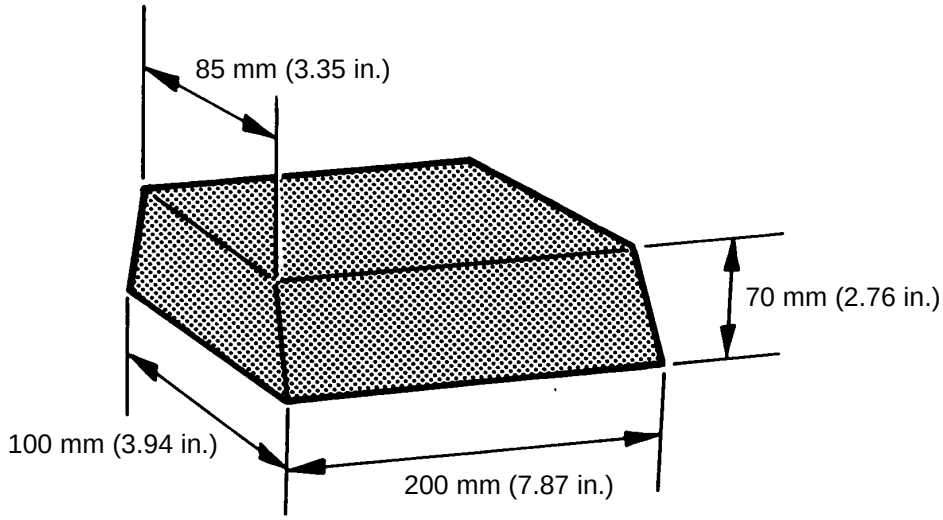

N17301